(424) 526-7777 • 13837 Fiji Way, Marina del Rey, CA 90292 • beaches.lacounty.gov

Caring for Our Coast

Gary Jones
Director

Amy M. Caves
Chief Deputy Director

Carol Baker
Deputy Director

LaTayvius R. Alberty
Deputy Director

MARINA DEL REY DESIGN CONTROL BOARD AGENDA

Wednesday, February 21, 2024, 1:30 p.m.

Burton W. Chace Park
Community Building
13650 Mindanao Way
Marina del Rey, CA 90292

1. **Call to Order, Land Acknowledgment, and Pledge of Allegiance**

2. **Approval of the October 18, 2023 Minutes**

3. **Consent Agenda**
The Chair may entertain a motion by a Board member at the beginning of the meeting to approve certain non-controversial agenda items as consent agenda items unless held by a Board member or member(s) of the public for discussion or separate action.

4. **Old Business**
A. Parcel 28 – Wayfarer Apartments – DCB #23-009-B – Consideration of exterior repainting

5. **New Business**
A. 2024 Design Control Board Meeting Schedule

B. Parcel 44 – Pacific Ocean Management, LLC / South Coast Corinthian Yacht Club – DCB #24-001 – Consideration of new storage shed

C. Parcel 97 – Pacific Ocean Management, LLC / Marina Beach Shopping Center – DCB #24-002 – Consideration of new signage

D. Parcel UR – Marina del Rey Parking Lot 5 – DCB #24-003 – Consideration of electric vehicle charging stations

6. **Staff Reports**
A. Ongoing Activities Report
- Board of Supervisors Actions on Items Relating to Marina del Rey
- Regional Planning Commission's Calendar
- Coastal Commission's Calendar
- Future Major DCB Agenda Items
- Small Craft Harbor Commission Minutes
- Redevelopment Project Status Report

B. Marina del Rey Special Events

C. DCB Annual Report

7. Public Comment

This is the opportunity for members of the public to address the Board on items that are not on the posted agenda, provided that the subject matter is within the jurisdiction of the Board. Speakers are reminded of the three-minute time limitation.

8. Adjournment

PLEASE NOTE

1. ADA ACCOMODATIONS: If you require reasonable accommodations or auxiliary aids and services such as material in alternate format or a sign language interpreter, please contact the ADA (Americans with Disabilities Act) Coordinator at (424) 526-7752 (Voice) or (TTY/TDD) users, please call the California Relay Service at 711. The ADA coordinator may be reached by email at rstassi@bh.lacounty.gov.

2. The Los Angeles County Board of Supervisors adopted Chapter 2.160 of the Los Angeles Code (Ord. 93-0031 ~ 2 (part), 1993), relating to lobbyists. Any person who seeks support or endorsement from the Design Control Board on any official action must certify that he/she is familiar with the requirements of this ordinance. A copy of the ordinance can be provided prior to the meeting and certification is to be made before or at the meeting.

All materials provided to the Design Control Board Members are available for public review, beginning the Friday prior to the meeting, at the **four Marina del Rey locations listed below**. The Department of Beaches and Harbors website also provides all reports and audio files from current and past meetings. Electronic copies of project submittals for Business Items referred to in this agenda will be available online for a two week period from the date of this agenda.

Please visit the Department of Beaches and Harbors Website Address at http://marinadelrey.lacounty.gov, or the Design Control Board Archive for more information.

Department of Beaches and Harbors
Administration Building
13837 Fiji Way
Marina del Rey, CA 90292

MdR Visitors & Information Center
4701 Admiralty Way
Marina del Rey, CA 90292

Burton Chace Park Community Room
13650 Mindanao Way
Marina del Rey, CA 90292

Lloyd Taber-Marina del Rey Library
4533 Admiralty Way
Marina del Rey, CA 90292

DESIGN CONTROL BOARD MINUTES
October 18, 2023

Members Present: Meg Rushing Coffee, Chair (First District); Genelle Brooks-Petty, Vice Chair (Second District); Harold Suetsugu, Member (Fifth District)

Members Absent: Steven Cho, Member (Fourth District)

Department Staff Present: LaTayvius Alberty, Deputy Director; Maral Tashjian, Planning Specialist; Porsche Nauls, Departmental Facilities Planner II; Tamika Simmons, Planner; Lola Reyna, Secretary

County Staff Present: Sevanna Hartonians, County Counsel

Guests Testifying: Jennifer Chung and Annie Tan, County of Los Angeles Department of Public Works (DPW); Wayne Espinoza, Tesla, Inc.; Wade Frazier and Cynthia Lee, PBWS Architects; Paul Lance

1. **Call to Order and Pledge of Allegiance**
   Chair Coffee called the meeting to order at 1:35 pm.
   Chair Coffee read the Land Acknowledgement and introduced the Pledge of Allegiance.

2. **Approval of the July 19, 2023 Minutes**

   Board Member Suetsugu moved to approve the July 19, 2023 minutes, seconded by Vice Chair Brooks-Petty.

   Ayes: 3 – Chair Coffee, Vice Chair Brooks-Petty, Mr. Suetsugu
   Nays: 0

3. **<u>Consent Agenda</u>**
   Board Member Suetsugu made the motion to move items 5A, 5B, and 5C to the consent agenda. Vice Chair Brooks-Petty moved to include item 5D on the consent agenda.

   Vice Chair Brooks-Petty moved that items 5A, 5B, 5C, and 5D be moved to the consent agenda, seconded by Board Member Suetsugu.

   Ayes: 3 – Chair Coffee, Vice Chair Brooks-Petty, Mr. Suetsugu
   Nays: 0

   <u>Public Comment</u>
   Mr. Lance identified himself to the Board and requested to know what improvements were being made at Aubrey E. Austin Jr. Park. He was informed by staff that the project plans were available on the back table in the community room.

   Ms. Chung, a Project Manager with DPW, introduced herself to the Board. She presented two promenade paver samples and expressed that the project team would like the Board to provide their opinion on the two color options for promenade pavers at the site.

Ms. Nauls clarified that the samples are related to the attempt of the project architects to match the promenade paver color with the neighboring project previously approved by the Board.

Ms. Alberty clarified that the Board did not need to remove the item from the consent agenda as approval could be granted to choose a similar material that matches the neighboring project.

Vice Chair Brooks-Petty moved that items 3A, 3B, 3C, and 3D be approved, seconded by Board Member Suetsugu.

Ayes: 3 – Chair Coffee, Vice Chair Brooks-Petty, Mr. Suetsugu
Nays: 0

4. Old Business

A. Parcel 44 – Pacific Marina Venture, LLC / Tesla Motors, Inc. – DCB #22-011 – Consideration of Tesla supercharging station

Ms. Nauls presented the staff report.

Board Comment

Chair Coffee asked if there were any questions from the Board.

Mr. Suetsugu asked if any neighboring business had previously expressed any concerns about the addition of the charging stations.

Vice Chair Brooks-Petty clarified that this would be out of the Board's purview.

Ms. Nauls commented that the project has already been reviewed and approved by the Department of Regional Planning.

Chair Coffee asked if the chargers themselves would still be white and red.

Ms. Nauls confirmed that they would be.

Chair Coffee asked if there was a presentation from the applicant. Ms. Nauls stated there was no presentation but the applicant's design manager was available for questions. Chair Coffee asked that the applicant introduce himself for a question.

Mr. Espinoza, Design Manager for Tesla, introduced himself to the Board.

Chair Coffee asked if more than one pattern could be chosen for the vinyl wrap.

Mr. Espinoza confirmed that more than one option could be installed.

Mr. Suetsugu asked what kilowatt rating the chargers would be.

Mr. Espinoza stated that the chargers would be rated for 250 kilowatts.

Public Comment
None

Vice Chair Brooks-Petty moved to approve DCB #22-011 with vinyl wrap options 1 and 3, seconded by Board Member Suetsugu.

Ayes: 3 – Chair Coffee, Vice Chair Brooks-Petty, Mr. Suetsugu
Nays: 0

5. New Business

A. Parcel BB – Loyola Marymount University Bove Boathouse – DCB #23-007 – Consideration of exterior improvements and new signage

Approved under consent agenda

B. Parcel 44 – Pacific Marina Venture, LLC / Alfred Coffee – DCB #23-008 – Consideration of new signage and awning

Approved under consent agenda

C. Parcel 28 – Wayfarer Apartments – DCB #23-009 – Consideration of exterior repainting

Approved under consent agenda

D. Parcel BR – Aubrey E. Austin Jr. Park Renovation – DCB #23-010 – Consideration of site improvements

Approved under consent agenda

E. Parcel HS & 91 – Marina "Mother's" Beach Restroom/Non-Motorized Boat Storage Renovation – DCB #23-011 – Conceptual design consideration of proposed site improvements

Ms. Simmons presented the staff report.

Board Comment

Chair Coffee asked if there were any questions from the Board.

Mr. Suetsugu commented that he liked the plan and its attention to the pedestrian experience. He inquired if staff would consider adding enhanced wayfinding signs and pedestrian lighting for increased safety and security.

Ms. Tashjian noted that the comment would be relayed to the project team for the final design review.

Chair Coffee inquired what the hours of operation would be for the structure.

Vice Chair Brooks-Petty inquired about the lockable hose bib and box finish.

Ms. Tan, a Project Manager with DPW, introduced herself. Ms. Tan stated that the hours of operation for the structure have not been established yet and the current restrooms hours are similar to those in other parks in the Marina. Final hours would be established by Department of Beaches and Harbors and take into consideration the new public gathering spaces proposed for the site. In addition, Ms. Tan stated that the hose bib would be a recessed component in a stainless steel box and explained that while the final finishes are still being selected, most of the finishes would be either anodized aluminum or stainless steel to withstand the marine environment.

Vice Chair Brooks-Petty asked if there would be lighting for the hours the structure is open.

Ms. Tan confirmed that lighting would be installed.

Chair Coffee asked if bathrooms could be made unisex for inclusivity.

Ms. Tan stated that the project may not be able to accommodate both the ADA bathrooms and unisex bathrooms, but DPW will review the potential for this change with the Department of Beaches and Harbors.

Chair Coffee asked if changing stations will be included.

Ms. Tan affirmed that there would be changing stations available.

Vice Chair Brooks-Petty noted that there could be potential to utilize the urinal space as a stall to accommodate a unisex bathroom as having inclusive restrooms is important for a public County facility.

Public Comment

None

Chair Coffee moved to approve DCB #23-011 with conditions that the Board's recommendations regarding the bathroom layout be considered and all finishes and lighting shall be shown during the final design review. The motion was seconded by Vice Chair Brooks-Petty.

Ayes: 3 – Chair Coffee, Vice Chair Brooks-Petty, Mr. Suetsugu
Nays: 0

F. Parcel 49M – Marina del Rey Parking Structure – DCB #23-012 – Conceptual design consideration of proposed construction

Ms. Simmons presented the staff report.

Board Comment
Chair Coffee asked if there were any questions from the Board.

Mr. Suetsugu commented that the Board reviewed this project during a Board Briefing.

Ms. Tashjian clarified that the approval is for a conceptual review and the project would return for final design approval.

Ms. Jung, a Project Manager with DPW, and Mr. Wade Frazier of PBWS Architects introduced themselves to answer questions.

Chair Coffee asked about the sustainability of using real wood in terms of maintenance, graffiti, and vandalism. She also asked if the bioswale was connected to roof drainage, or if it is meant to be functional or decorative. If the bioswale would be functional, where would water flow and are there other storm water mitigation measures that would be implemented in the design. In addition, she commented that the plants selected seem to be high water users and non-native, particularly the trees, and she would like to see more California plants. Chair Coffee also commented on the use of real grass on the proposed mound and that this feature may be a maintenance and water issue. She also noted her preference for seeing other ground cover alternatives that are grass-like and more drought tolerant, with less maintenance requirements.

Mr. Frazier commented that he is working with DBH to select a stamped concrete pattern instead of actual wood material.

Chair Coffee asked for more information regarding benches proposed for the site.

Mr. Fraizer commented that the bench details have not been confirmed yet.

Chair Coffee noted that the benched included in the proposal appear to be very easy to use for skateboarding and comfortable to sleep on. She encouraged the project team to explore ways to discourage these activities.

Mr. Fraizer commented that stormwater treatment related to the proposed project would be connected to existing treatment efforts for the entire Parcel 49, including efforts near the Boat Launch Facility. The bioswale included in the project may be more decorative, but this would be confirmed once additional soil information is received.

Ms. Lee, a landscape architect for the project, commented that the plant palette would be drought tolerant with the exception of the trees. Trees would be deep watered with bubblers on a separate system. She noted that while the lawn area is small, it is an important piece of the design as it provides a space for seating and recreation.

Vice-Chair Petty Brooks noted the need for lighting to be placed at the crosswalk between the structure and Trader Joes. In addition, she asked if the seating near the mound would accommodate wheelchairs.

Mr. Fraizer confirmed that accessible seating would be included.

Vice-Chair Petty Brooks asked if a ride share area would be included.

Mr. Fraizer responded that opportunities for a rideshare area are being explored and would most likely use the street curb in front of the structure. He added that the site is relatively

narrow and the goal is to not encroach into boat launch area. In addition, he noted that there are lights along the bike path and agreed that there should be a lighting feature not only for bicycles but for pedestrian crossings. Mr. Frazier stated that there is a traffic study underway that would include related information.

Mr. Suestugu expressed interest in seeing the traffic study as he was concern about the stacking of cars and congestion when going in and out of the structure, as it would be a level structure with only one entrance.

Mr. Frazier noted that the intent of the structure would be for single entry for day to day activities and special events where the flow of the cars could be modified to pass through the boat launch parking lot.

Chair Coffee asked if there would be any accommodations for scooters?

Mr. Fraizer responded that scooters are not called out in design, but would be considered.

Chair Coffee commented that a bottle refilling station would be necessary if cyclists would pass through the area. She also noted that the design is still extremely busy and there is no focus. While she likes that the design reflects the marina and includes sails, there should be more cohesiveness in terms of shapes, colors, textures, and materials used.

Mr. Fraizer noted that the project team was reevaluating the design to be more simplified.

Public Comment
Mr. Lance addressed the Board and stated that the project would be adjacent to the Tesla project presented under Item 4A. He suggested that the projects be combined, moving the Tesla charging station into the proposed parking structure. He also noted that the two-story building would impact the view of the Marina. Mr. Lance also stated that he recognizes three hubs in the marina: Chace Park, Trader Joes, and the new Cedars Sinai building. He expressed that the parking lot does not provide access to any of those three areas.

Chair Coffeee moved to approve DCB #23-012 with a condition that the recommendations regarding plant palette, design uniformity, sustainability, lighting, safety, accessibility, and multi-modes of mobility, including rideshares and scooters, be considered. The motion was seconded by Vice Chair Brooks-Petty.

Ayes: 3 – Chair Coffee, Vice Chair Brooks-Petty, Mr. Suetsugu
Nays: 0

6. Staff Reports
All reports were received and filed.

7. Public Comment
Mr. Lance addressed the Board and stated that he was a long-time resident in the Marina and had concerns with the opening of the Mariners Village Apartments promenade to the public, with the removal of the existing gates. He suggested that a gate be installed that would be provide controlled access to the promenade for safety reasons.

8. Adjournment

Moved by Vice Chair Brooks-Petty, seconded by Board Member Suetsugu.

Ayes: 3 – Chair Coffee, Vice Chair Brooks-Petty, Mr. Suetsugu
Nays: 0

Chair Coffee adjourned the meeting at 3:08 p.m.

Respectfully Submitted,

Lola Reyna
Secretary for the Design Control Board

Location of February 21, 2024 DCB Items

Old Business
4A – Parcel 28 – Wayfarer Apartments

New Business
5B – Parcel 44 – Boardwalk Marina del Rey / South Coast Corinthian Yacht Club
5C – Parcel 97 – Marina Beach Shopping Center
5D – Parcel UR – Parking Lot #5

Los Angeles County Department of Beaches and Harbors, Planning Division.

(424) 526-7777 • 13837 Fiji Way, Marina del Rey, CA 90292 • beaches.lacounty.gov

Caring for Our Coast

Gary Jones
Director

Amy M. Caves
Chief Deputy Director

Carol Baker
Deputy Director

LaTayvius R. Alberty
Deputy Director

February 21, 2024

TO: Design Control Board

FROM: Gary Jones, Director

SUBJECT: ITEM 4A – PARCEL 28 – WAYFARER APARTMENTS – DCB #23-009-B CONSIDERATION OF EXTERIOR REPAINTING

Item 4A on your agenda is a submittal from Wayfarer Apartments (Applicant), seeking approval for exterior repainting. The project is located at 14000 Palawan Way.

PROJECT OVERVIEW

Background

On October 18, 2023, your Board approved Wayfarer Apartments to repaint the exterior of the site with shades of blue, green, and off white. The Applicant has returned seeking approval to repaint the exterior of the site with a new color scheme.

Existing Conditions

The project site is approximately 8.5 acres and is bordered by Del Rey Yacht Club to the east, public parking Lot #9 to the west, and the main channel to the north and south. The parcel is currently developed with a 379-unit residential community called Wayfarer Apartments, which consists of seven three-story residential buildings and a club house constructed over a two-level, semi-subterranean garage podium.

Proposed Project

The Applicant proposes to repaint the exterior of the apartment buildings and club house, including all exterior wood and metal surfaces, doors, trims, siding, stucco, building walls, fencing, balconies, and gates.

BUILDING DESIGN

Exterior Colors

The Applicant proposes to repaint the exterior of the site with shades of blue, beige, and off white. All floors would be painted with Sherwin Williams colors. The Applicant proposes two color scheme options. Option 1, the Applicant's preference, would feature three colors. The first floor, roof edge, and balcony trims would be painted *Naval SW6244*, the second floor would be painted *Balanced Beige SW7037*, and the third and fourth

floors would be painted *Dover White SW6385*. Option 2 features two colors. The first floor, roof edge, and balcony trims would be painted *Naval SW6244*. The second, third, and fourth floor would be painted *Dover White SW6385*.

STAFF REVIEW

Staff finds that the Applicant has selected a color palette that is representative of the Marina del Rey Design Guidelines Design Objective 1b, which encourages designs that complement the unique surrounding waterfront environment.

Staff recommends APPROVAL of DCB #23-009-B, subject to the following conditions:

1) **No change shall be made to the approved design without written approval from the Department of Beaches and Harbors Planning Division staff.**

2) **No substantial change shall be made to the approved design without the written consent of the Design Control Board.**

GJ:WO:ts

WAYFARER®
Apartments + Marina

MARINA MAP

LEGACY PARTNERS

14000 Palawan Way, Marina del Rey, CA 90292

P 310-822-2001 F 310-822-4840

LiveWayfarer.com

WAYFARER
Apartments + Marina

Palawan Way
WAYFARER
Apartments + Marina

Previously approved by the DCB on 10/18/2023

Exterior Concept Rendering

Sherwinn Williams
Dover White SW6385

Sherwinn Williams
Oceanside SW6496

Sherwinn Williams
Great Falls SW6495

Sherwinn Williams
Cloudburst SW6487

Sherwinn Williams
Aloe SW6464

Exterior Concept Rendering

Option 1 (Preferred)

Sherwinn Williams
SW 6385 Dover
White

Sherwinn Williams
SW 7037 Balanced
Beige

Sherwinn Williams
SW 6244 Naval

WAYFARER APARTMENTS + MARINA

Exterior Concept Rendering

Option 2

Sherwinn Williams
SW 6385 Dover
White

Sherwinn Williams
SW 6244 Naval

(424) 526-7777 • 13837 Fiji Way, Marina del Rey, CA 90292 • beaches.lacounty.gov

Caring for Our Coast

Gary Jones
Director

Amy M. Caves
Chief Deputy Director

Carol Baker
Deputy Director

LaTayvius R. Alberty
Deputy Director

February 21, 2024

TO: Design Control Board

FROM: Gary Jones, Director

SUBJECT: ITEM 5A – DCB 2024 MEETING AND SUBMITTAL DEADLINES

The filing deadline for any Design Control Board meeting submittal is noon, four Wednesdays prior to the date of the meeting. Design Control Board meetings begin at 1:30 p.m. on the third Wednesday of each month at the Burton Chace Park Community Building, 13650 Mindanao Way, Marina del Rey. Below are the 2024 meeting dates and filing deadlines.

Meeting Date	**Filing Deadline**
February 21, 2024	January 24, 2024
March 20, 2024	February 21, 2024
April 17, 2024	March 20, 2024
May 15, 2024	April 17, 2024
June 20, 2024*	May 22, 2024
July 17, 2024	June 19, 2024
August 21, 2024	July 24, 2024
September 18, 2024	August 21, 2024
October 16, 2024	September 18, 2024
November 20, 2024	October 23, 2024
December 18, 2024	November 20, 2024

*The regularly scheduled meeting on Wednesday, June 19, 2024 would fall on a County holiday. Therefore, the Design Control Board meeting for June will be tentatively held on Thursday, June 20, 2024.

(424) 526-7777 • 13837 Fiji Way, Marina del Rey, CA 90292 • beaches.lacounty.gov

Caring for Our Coast

Gary Jones
Director

Amy M. Caves
Chief Deputy Director

Carol Baker
Deputy Director

LaTayvius R. Alberty
Deputy Director

February 21, 2024

TO: Design Control Board

FROM: Gary Jones, Director

SUBJECT: ITEM 5B – PARCEL 44 – PACIFIC OCEAN MANAGEMENT, LLC / SOUTH COAST CORINTHIAN YACHT CLUB – DCB #24-001 – CONSIDERATION OF NEW STORAGE SHED

Item 5A on your agenda is a submittal from the South Coast Corinthian Yacht Club (Applicant) seeking approval for a new prefabricated storage shed. The project is located at 13444 Bali Way.

PROJECT OVERVIEW

Existing Conditions

Parcel 44 consists of approximately 8.39 landside acres and 4.68 waterside acres. The landside portion has frontages on Admiralty Way, Mindanao Way, Bali Way and Basin G. Parcel 44 is developed as the "Boardwalk Marina del Rey" shopping center, which consists of eight buildings with a total area of 82,652 square feet. The site includes Marine Commercial, Boat Storage, and Visitor-Serving/Convenience Commercial uses, in addition to two outdoor plazas with tiered stadium seating, waterfront views, an anchorage, and outdoor dining. South Coast Corinthian Yacht Club is located within Building VIII, along Bali Way, adjacent to a boat storage yard.

Proposed Project

The Applicant proposes to install a new storage shed at the site. The shed would be used to store race equipment (anchors, buoys, flags, etc.) and other items for the boat yard and yacht club.

PROPOSED PROJECT

The Applicant is seeking approval to replace an existing 7' wide by 7' long by 7' tall, prefabricated storage shed, located within perimeter fencing to the west of a restroom building, adjacent to the public promenade. The new shed would be placed in the same location and would measure 8' wide by 15' long, with a height of approximately 7'. The shed exterior would consist of *Hat Box* brown colored engineered wood siding, *Ground Coffee* brown colored trims, and *Golden Cedar* colored roof shingles to complement the colors of the adjacent buildings. No exterior lighting is proposed for the storage shed.

STAFF REVIEW

Staff finds that the storage shed is generally consistent with the Marina del Rey Design Guidelines. The structure would be visible from the public promenade. Staff finds that the structure would not significantly impact any public views of Basin G as it would be placed within an existing boat storage facility (DG. 205). The proposed project does not require architectural modifications to the existing yacht club facility.

Staff recommends APPROVAL of DCB #24-001, subject to the following conditions:

1) **The Applicant shall obtain approval from the Department of Regional Planning.**

2) **No change shall be made to the approved design without written approval from the Department of Beaches and Harbors Planning Division staff.**

3) **No substantial change shall be made to the approved design without the written consent of the Design Control Board.**

GJ:WO:ts

Proposed Project

We are looking to upgrade the storage shed we have in the boatyard. We currently have a 7'x7' shed which we use to store our race equipment (anchors, buoys, flags, etc.) and other items for the boatyard and the club. With the growth of our racing program, we are finding that we need some additional outdoor storage space for these items and would like to install a Tuff Shed. The existing shed is a Rubbermaid product from Home Depot which works ok but what we are proposing would be a much nicer product (better finishes visually, but also functionally much sturdier). The proposed project would replace the existing shed with the newer one.

Project Location

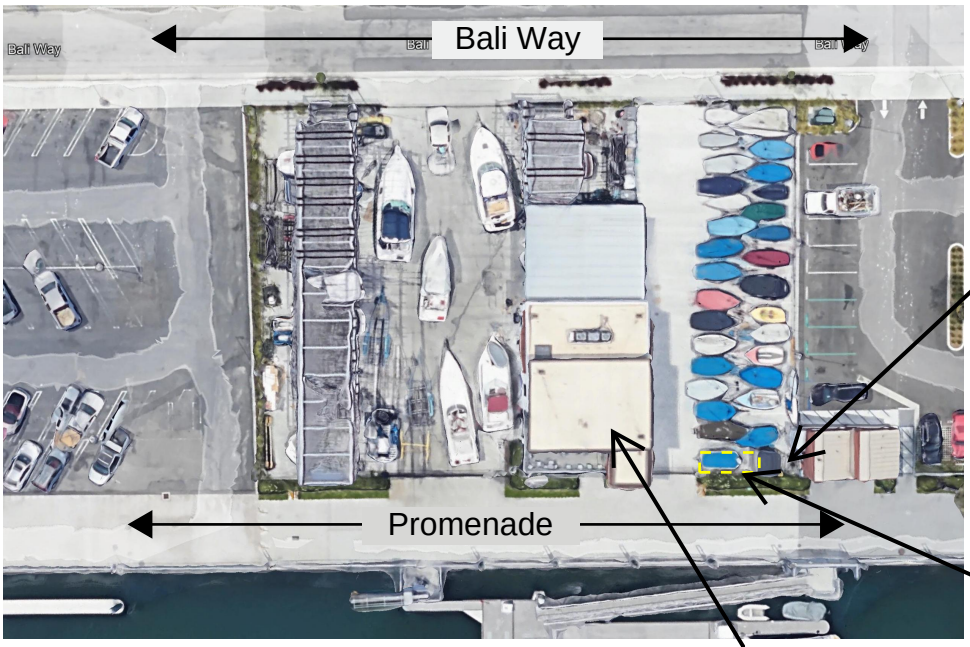

Site Plan

South Coast Corinthian Yacht Club

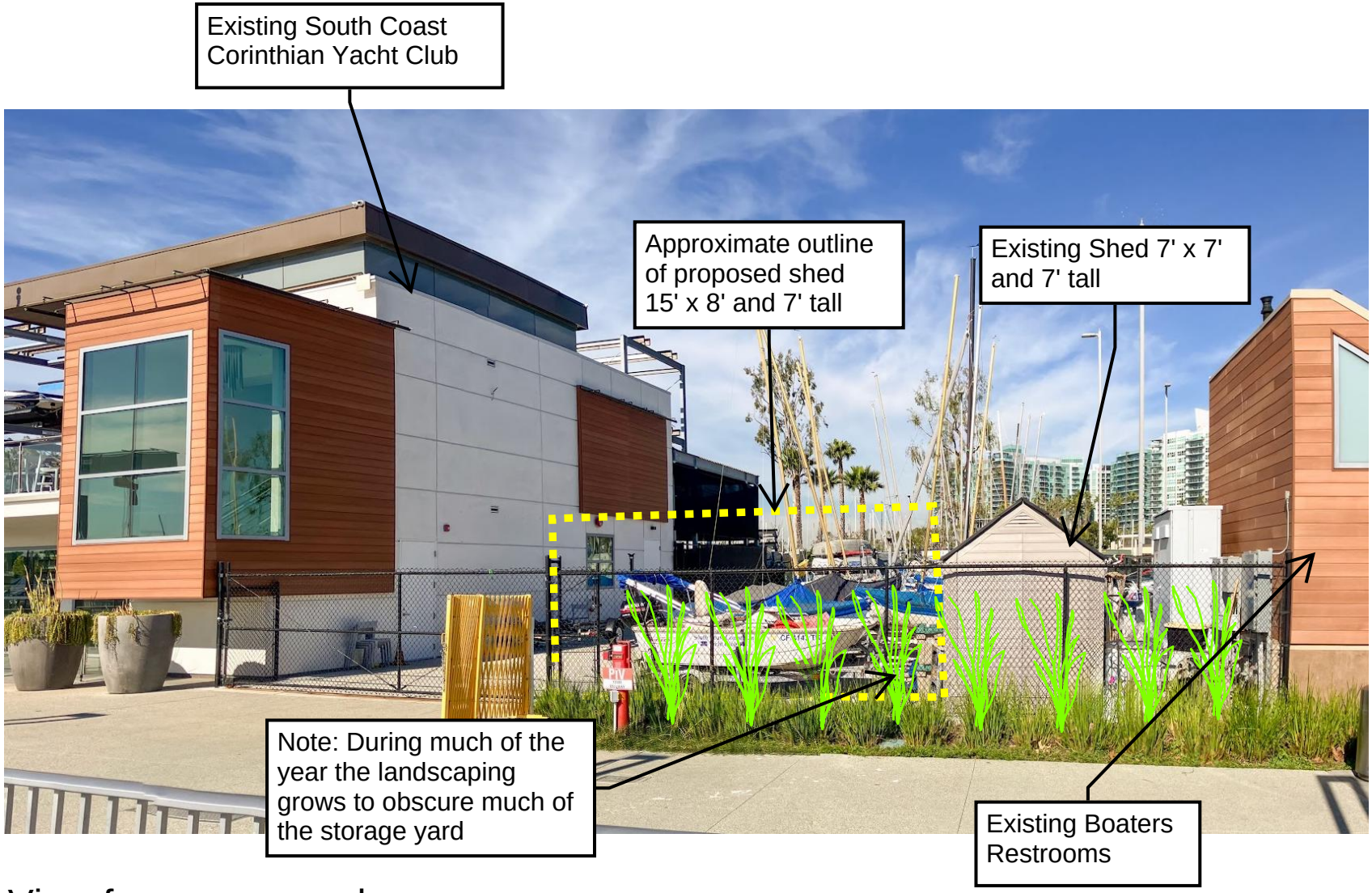

View from promenade

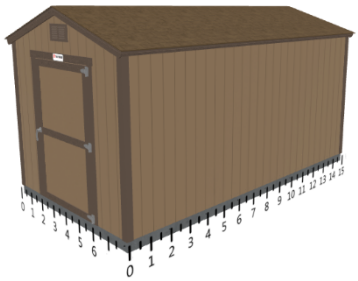

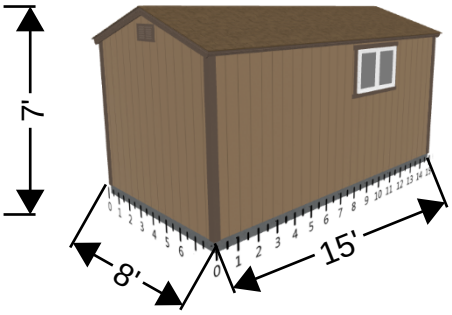

Wall D

Wall A

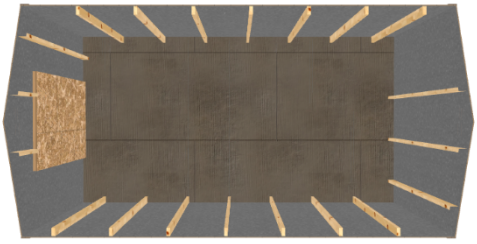

Wall C

Wall B

Base Details/Permit Details

Building Size & Style
Premier Ranch - 8' wide by 15' long

Door
4' x 6'2" Single Shed Door, Right Hinge Placement

Paint Selection
Base: Hat Box Brown, Trim: Ground Coffee

Roof Selection
Golden Cedar 3 Tab

Drip Edge
Brown

Is a permit required for this job?
No,If local jurisdiction requires a permit, fees will be added before installation can take place

Optional Details

Windows
3'x2' Insulated Horizontal Sliding Window

Floor and Foundation
4 Ea Shed Anchor into Dirt - Auger or MR88

Vents
2 Ea 16"x8" Wall Vent - Brown

Jobsite/Installer Details

Do you plan to insulate this building after Tuff Shed installs it?
No

Is there a power outlet within 100 feet of installation location?
Yes

The building location must be level to properly install the building. How level is the install location?
Within 4" of level

Will there be 18" of unobstructed workspace around the perimeter of all four walls?
No

Can the installers park their pickup truck & trailer within approximately 200' of your installation site?
Yes

Substrate Shed will be installed on?
Anchored to Concrete with Shed Floor

Customer Signature: _____ Date: _____

Proposed Finishes

Colors for the proposed shed are intended to complement the adjacent boater's restroom:

Golden Cedar for the roof
Hat Box Brown PPG 1095-6 for the field
Dark Coffee PPG 1076-7 for the trim

Golden Cedar

Hat Box Brown
PPG 1085-6

Ground Coffee
PPG 1076-7

(424) 526-7777 • 13837 Fiji Way, Marina del Rey, CA 90292 • beaches.lacounty.gov

Caring for Our Coast

Gary Jones
Director

Amy M. Caves
Chief Deputy Director

Carol Baker
Deputy Director

LaTayvius R. Alberty
Deputy Director

February 21, 2024

TO: Design Control Board

FROM: Gary Jones, Director

SUBJECT: ITEM 5C – PARCEL 97 – PACIFIC OCEAN MANAGEMENT, LLC / MARINA BEACH SHOPPING CENTER – DCB #24-002 – CONSIDERATION OF NEW SIGNAGE

Item 5C on your agenda is a submittal from Pacific Ocean Management, LLC (Applicant), seeking approval for new signage at the Marina Beach Shopping Center. The project is located at 510 Washington Boulevard.

PROJECT OVERVIEW

Background

On December 13, 2018, your Board approved a final renovation design and master sign program for the Marina Beach Shopping Center, with several conditions, including a requirement to return to your Board for review of tenant signs.

Existing Conditions

The 1.8-acre Marina Beach Shopping Center is located on Washington Boulevard, between Via Marina and Palawan Way. The center consists of seven single story commercial buildings with a surface parking lot fronting Washington Boulevard and alley access with parking in the rear. A site renovation is currently underway. Sirian Massage is located in Building 1, The Cleaning Baron is located in Building 3, and Wolf's Liquor and Samoa's are located in Building 6.

Proposed Project

The Applicant proposes to install four tenant identification signs.

SIGNAGE

Building Façade

The Applicant proposes to install four wall-mounted tenant identification signs facing Washington Boulevard above the main entrance of each tenant space. All signs would be installed approximately 12' above grade.

Sirian Massage
The blue and white colored, aluminum, reverse lit channel letter sign would measure 1'-8" tall by 14'-1" wide and read "Sirian Massage".

Cleaning Baron
The turquoise colored, aluminum, reverse lit channel letter sign that would measure 2'-3" tall by 35' wide and read "The Cleaning Baron" with a company logo.

Sampas Pizza
The reverse lit sign would feature white channel and push through lettering on a black circular background. The sign would measure approximately 6'-3" tall by 6'-3" wide and read "Pizza Café Sampa's Marina del Rey".

Wolf's Liquor
The turquoise colored, aluminum reverse lit channel letter sign would read "Wolf's Liquor" and measure approximately 2' tall by 19'-8" wide.

Hours of Illumination
The hours of illumination for all signs would be from dusk until dawn.

STAFF REVIEW
Staff finds the proposed project is generally consistent with the Marina del Rey Design Guidelines, and the Marina Beach Shopping Center Sign Program. Following DCB approval, all signs are subject to review by the Los Angeles County Department of Regional Planning for conformity with the Marina del Rey Revised Permanent Sign Controls.

Staff recommends APPROVAL of DCB #24-002, subject to the following conditions:

1) **The Applicant shall obtain approval from the Department of Regional Planning.**

2) **No change shall be made to the approved design without written approval from the Department of Beaches and Harbors Planning Division staff.**

3) **No substantial change shall be made to the approved design without the written consent of the Design Control Board.**

GJ:WO:ts

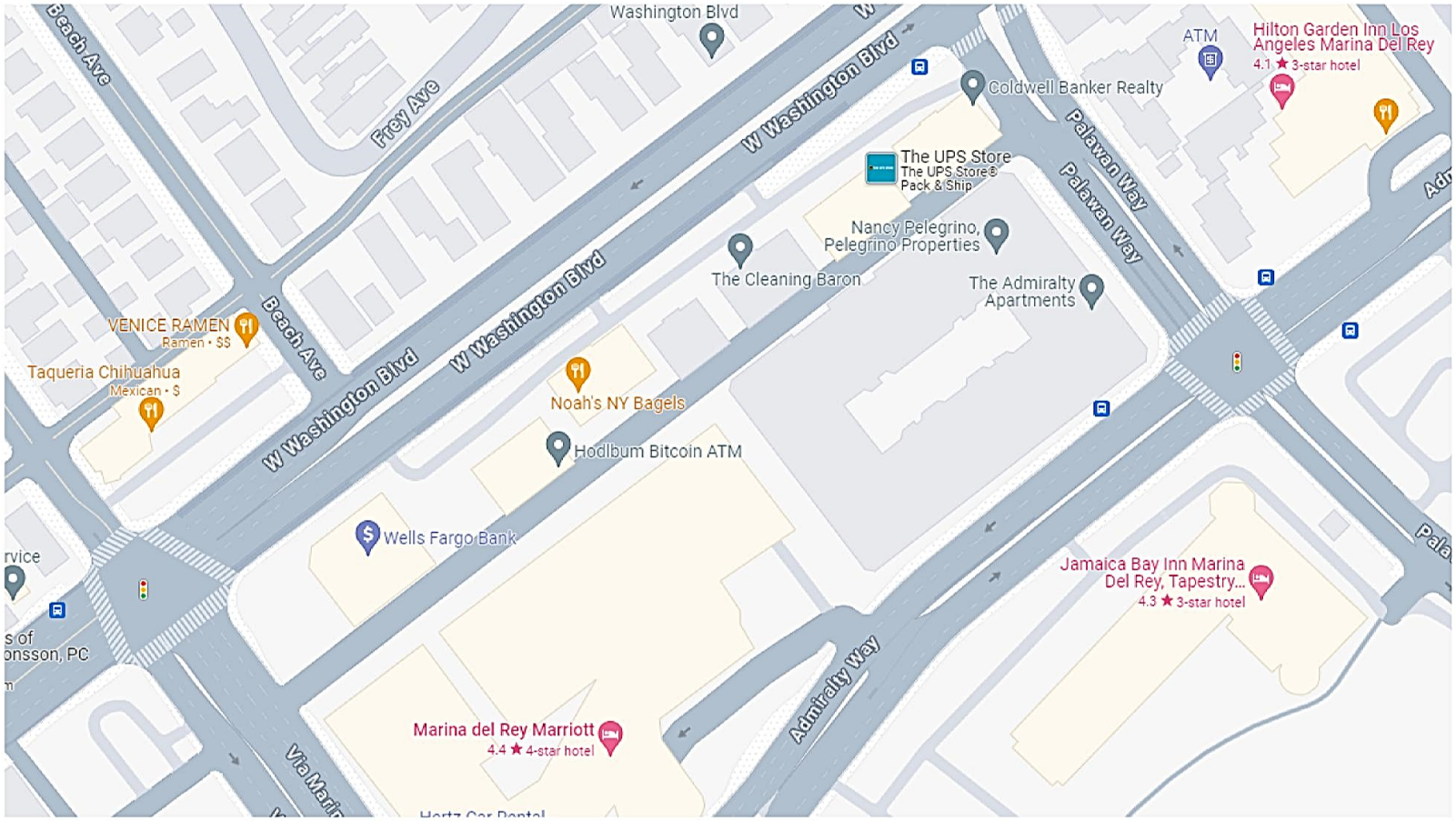

CONTINENTAL SIGNS ETC.

Quality SIGNS of all kinds

818-7851210

Continental Neon & Plastic Signs Inc.

14839 Clavert st, Van Nuys, CA 91411

Email :info@localsignco.com

Tel : 818- 785-1210

Fax : 818-909-4869

www.localsignco.com

Project:

Job Address:

Salesperson:

Kevin Kosar 818- 785-1210----------

Date:

Drawn By:

Customer Approval:

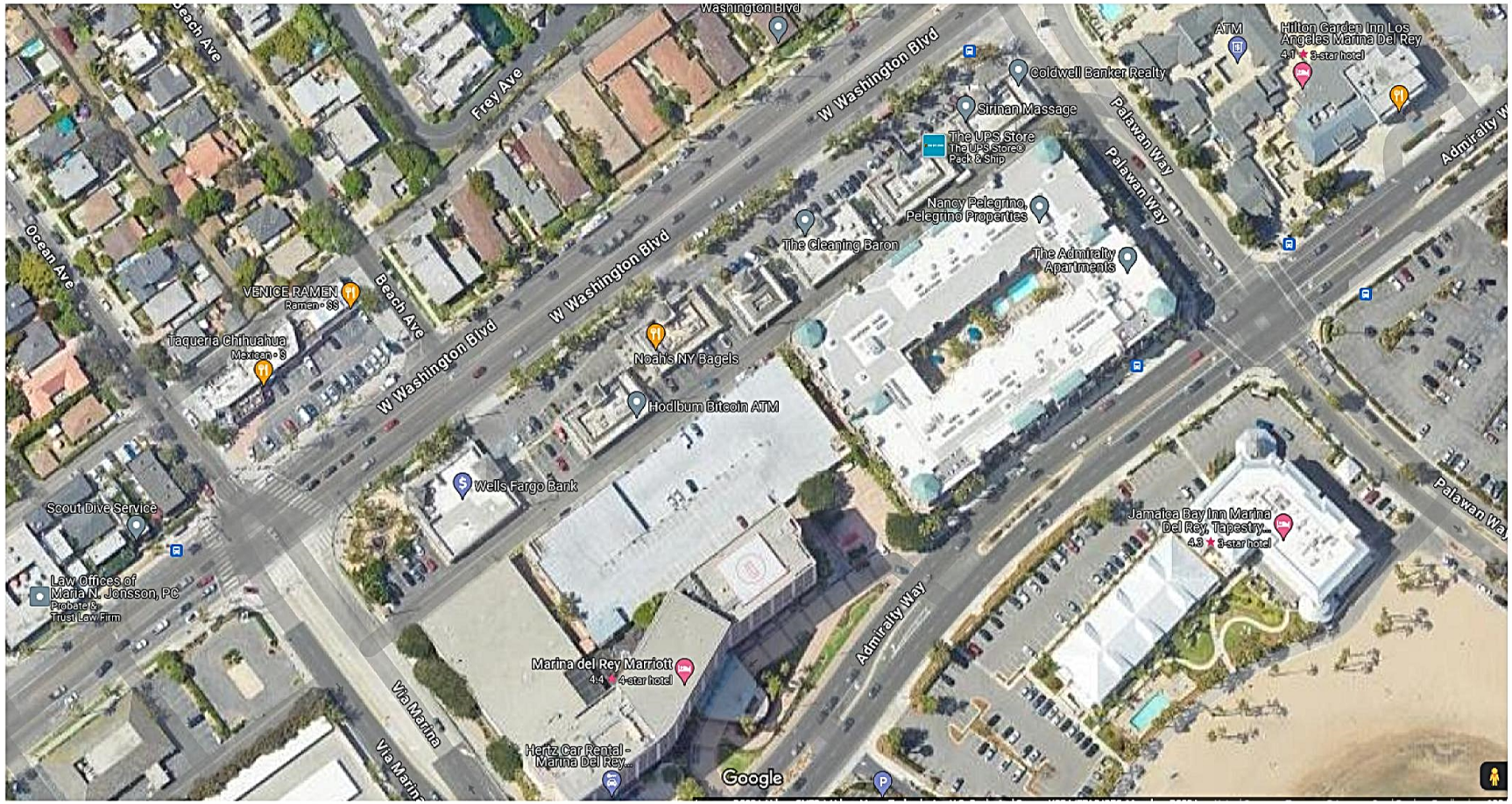

CONTINENTAL SIGNS ETC.

Quality SIGNS of all kinds

818-7851210

Continental Neon & Plastic Signs Inc.
14839 Clavert st, Van Nuys, CA 91411
Email :info@localsignco.com
Tel : 818- 785-1210
Fax : 818-909-4869
www.localsignco.com

Project:

Job Address:

Salesperson:

Kevin Kosar 818- 785-1210----------

Date:

Drawn By:

Customer Approval:

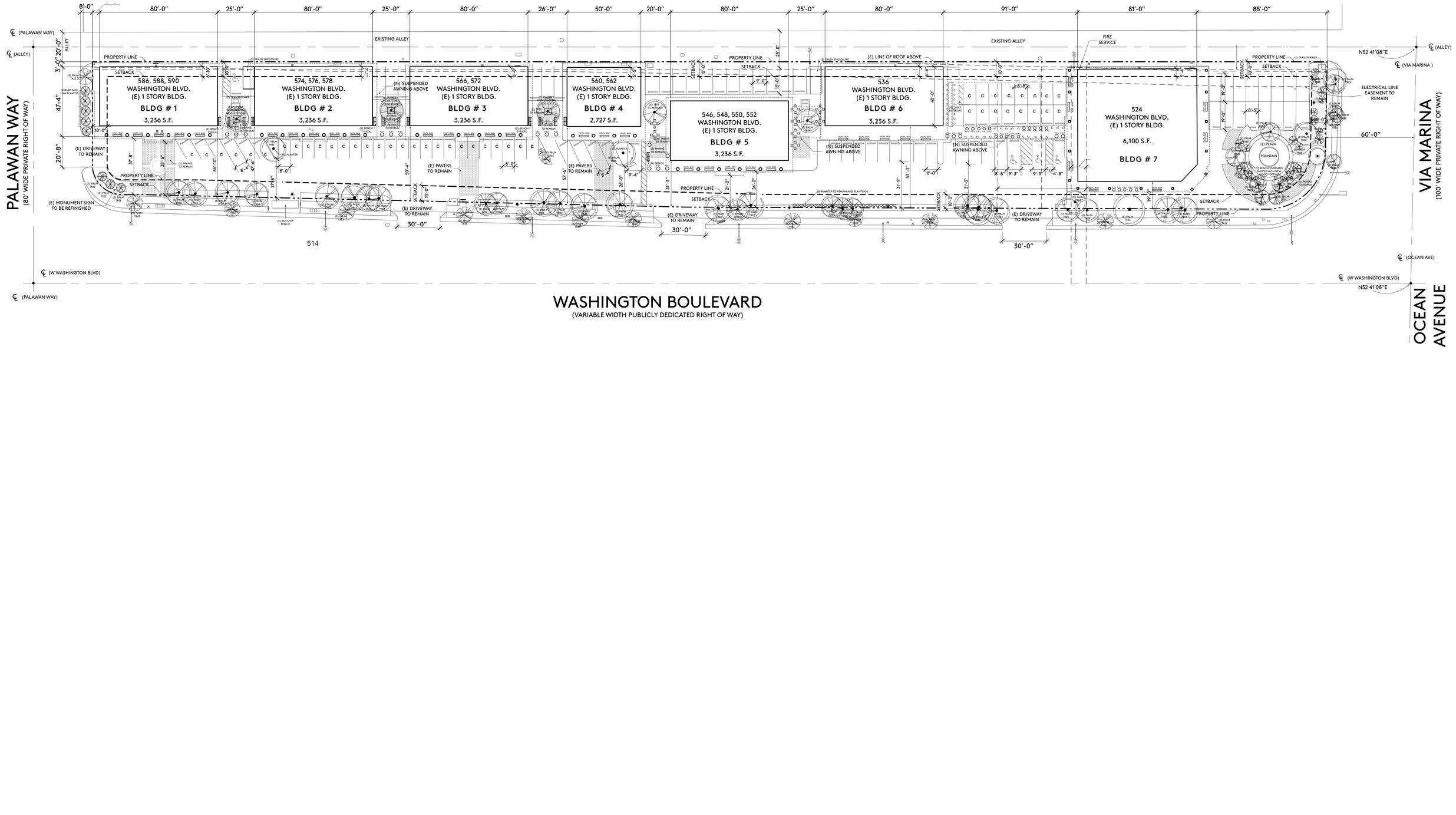
PALAWAN WAY
(80' WIDE PRIVATE RIGHT OF WAY)
VIA MARINA
(100' WIDE PRIVATE RIGHT OF WAY)
WASHINGTON BOULEVARD
(VARIABLE WIDTH PUBLICLY DEDICATED RIGHT OF WAY)
OCEAN AVENUE
586, 588, 590 WASHINGTON BLVD. (E) 1 STORY BLDG. BLDG # 1 3,236 S.F.
574, 576, 578 WASHINGTON BLVD. (E) 1 STORY BLDG. BLDG # 2 3,236 S.F.
566, 572 WASHINGTON BLVD. (E) 1 STORY BLDG. BLDG # 3 3,236 S.F.
560, 562 WASHINGTON BLVD. (E) 1 STORY BLDG. BLDG # 4 2,727 S.F.
546, 548, 550, 552 WASHINGTON BLVD. (E) 1 STORY BLDG. BLDG # 5 3,236 S.F.
536 WASHINGTON BLVD. (E) 1 STORY BLDG. BLDG # 6 3,236 S.F.
524 WASHINGTON BLVD. (E) 1 STORY BLDG. 6,100 S.F. BLDG # 7
EXISTING ALLEY
PROPERTY LINE
SETBACK
(E) LINE OF ROOF ABOVE
FIRE SERVICE
ELECTRICAL LINE EASEMENT TO REMAIN
(E) DRIVEWAY TO REMAIN
(E) PAVERS TO REMAIN
(N) SUSPENDED AWNING ABOVE
(E) MONUMENT SIGN TO BE REFINISHED
(E) PLAZA
FOUNTAIN
(E) PLANTER TO REMAIN AND PLANTINGS
(E) TRASH ENCLOSURE
(E) TRANSFORMER
(E) BUS STOP BENCH
(E) PALM TREE
514
N52 41'08"E
(ALLEY)
(VIA MARINA)
(OCEAN AVE)
(W WASHINGTON BLVD)
(PALAWAN WAY)

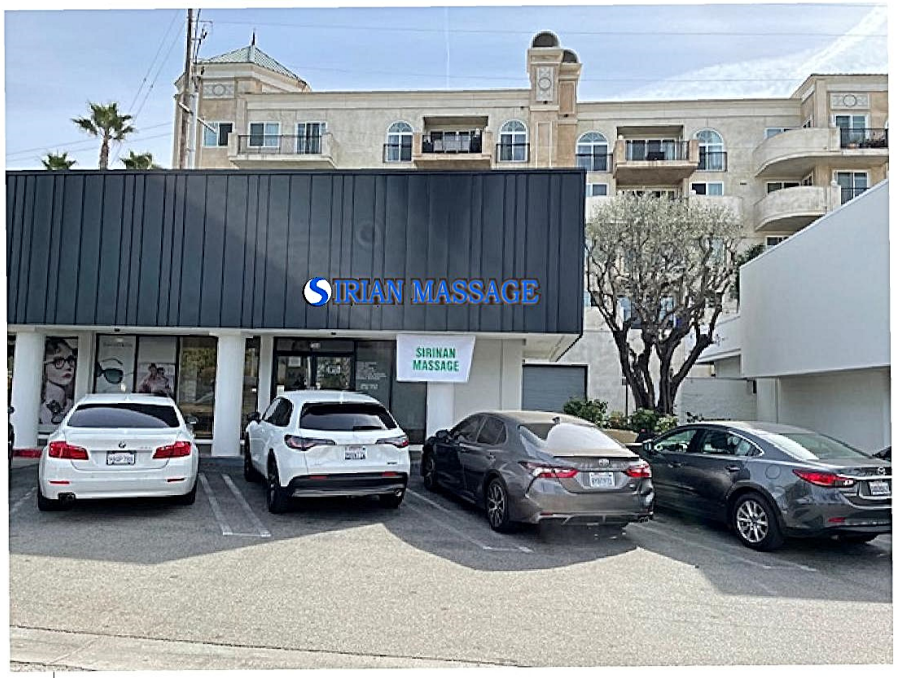

586 Washington Blvd

170"

20"

SIRIAN MASSAGE

. Material: Aluminum
. Color: Blue
. Type: Reverse Channel letters
. Copy: Sirian Massage
. Font: Ming Liu
. Size: 20" x 170"
. Total Allowable: 26 Sf.
. Illumination: White LED

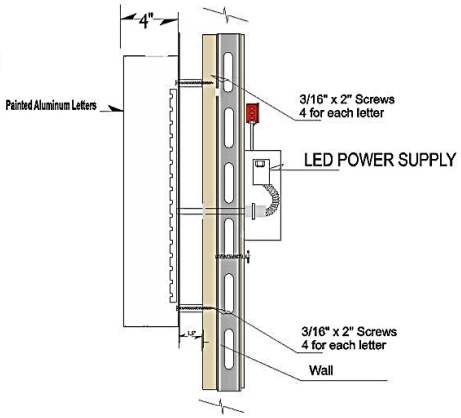

Connection to the wall directly

Total Allowable : 26 Sq.

CONTINENTAL SIGNS ETC.
Quality SIGNS of all kinds
818-7851210

Continental Neon & Plastic Signs Inc,
14839 Calvert St. Van Nuys CA 91411
Email: info@localsignco.com
Tel: 818- 785-1210
www.localsignco.com

Project :

Job Address:
586 Washington Blvd.

Date:

Drawn By:

Customer Approval:

Page #:

S-3

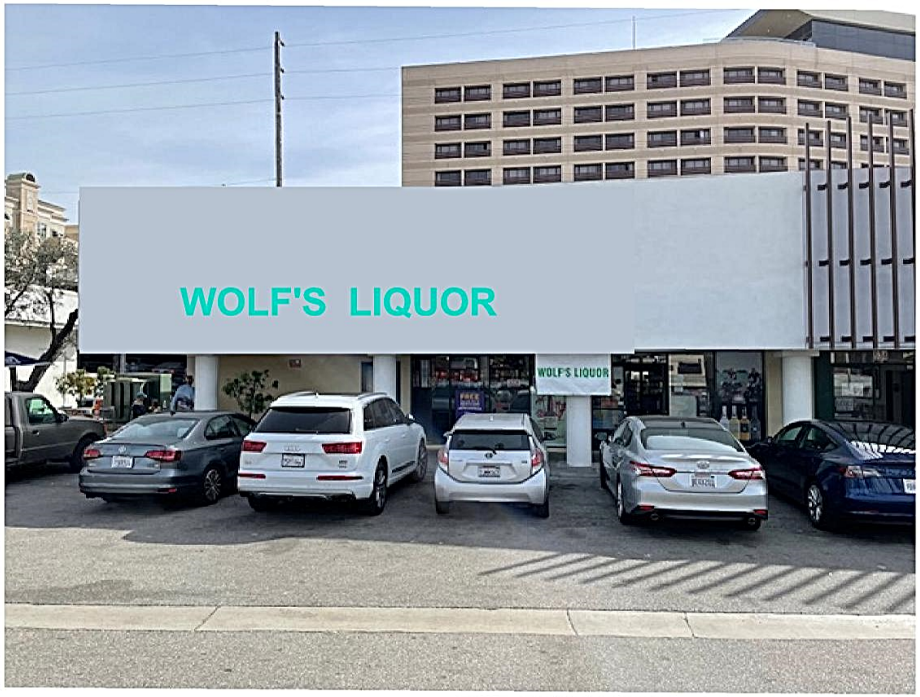

SIGN 11 536 Washington Blvd

238"

24"

WOLF'S LIQUOR

. Material: Aluminum
. Color: Turquoise
. Type: Reverse Channel letters
. Copy: Wolf's Liquor
. Font: Arial Bold
. Size: 24" x 238"
. Total Allowable: 40 Sf.
. Illumination: White LED

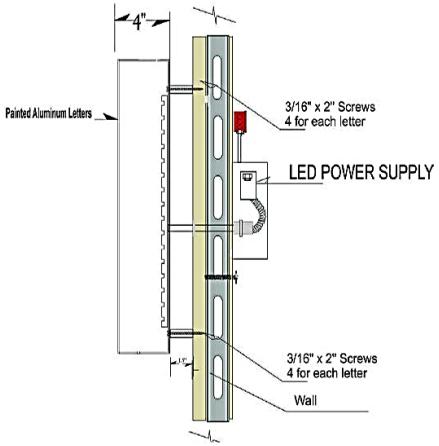

Connection to The Wall

Total Allowable : 40 Sf.

CONTINENTAL SIGNS ETC.
Quality SIGNS of all kinds
818-7851210

Continental Neon & Plastic Signs Inc.
14839 Clavert st, Van Nuys, CA 91411
Email :info@localsignco.com
Tel : 818- 785-1210
Fax : 818-909-4869
www.localsignco.com

Project:

Job Address:

Salesperson:
Kevin Kosar 818- 785-1210----------

Date:

Drawn By:

Customer Approval:

420"

THE CLEANING BARON

27"

Project Description:

. Material: Aluminum
. Color: Turquoise
. Type: Reverse Channel letters
. Copy: Cleaning Baron
. Font: Baskerville
. Size: 27" x 420"
. Total Allowable: 80 Sf.
. Illumination: White LED

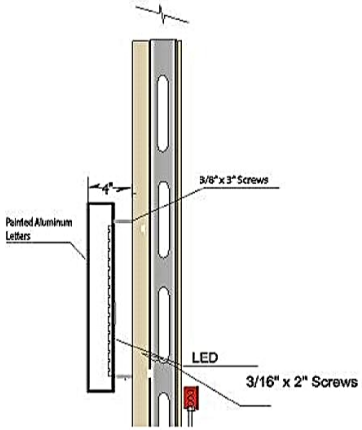

Connection To The Wall

CONTINENTAL SIGNS ETC.
Quality SIGNS of all kinds
818-7851210

Continental Neon & Plastic Signs Inc.
14839 Clavert st, Van Nuys, CA 91411
Email :info@localsignco.com
Tel : 818- 785-1210
Fax : 818-909-4869
www.localsignco.com

Project:

Job Address:
566 W. Washington Blvd.

Salesperson:
Kevin Kosar 818- 785-1210----------

Date:

Drawn By:

Customer Approval:

SIGN
12

. Material: Aluminum
. Color: White
. Type: Reverse Channel letters
And Push through Letters
. Copy: Sampa's Pizza Cafe- Marina Del Ray
. Font: N/a
. Size: 76" x 76"
. Total Allowable: 40 Sf.
. Illumination: White LED

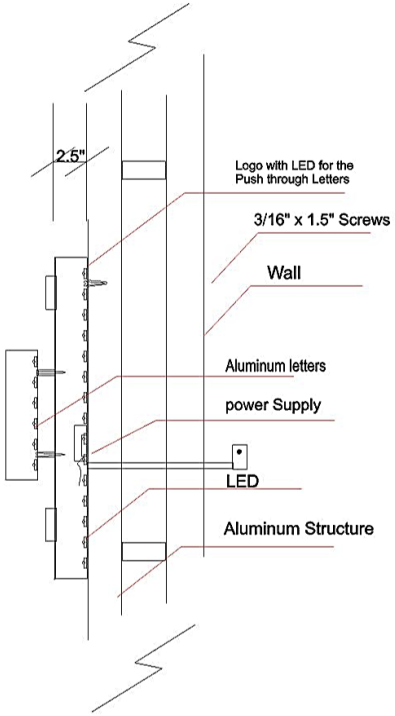

Connection To the Wall

CONTINENTAL SIGNS ETC.
Quality SIGNS of all kinds
818-7851210

Continental Neon & Plastic Signs Inc.
14839 Clavert st, Van Nuys, CA 91411
Email :info@localsignco.com
Tel : 818- 785-1210
Fax : 818-909-4869
www.localsignco.com

Project:

Job Address:

534 Washington Blvd

Salesperson:

Kevin Kosar 818- 785-1210----------

Date:

Drawn By:

Customer Approval:

S12

(424) 526-7777 • 13837 Fiji Way, Marina del Rey, CA 90292 • beaches.lacounty.gov

Caring for Our Coast

Gary Jones
Director

Amy M. Caves
Chief Deputy Director

Carol Baker
Deputy Director

LaTayvius R. Alberty
Deputy Director

February 21, 2024

TO: Design Control Board

FROM: Gary Jones, Director

SUBJECT: ITEM 5D – PARCEL UR – COUNTY OF LOS ANGELES INTERNAL SERVICES DEPARTMENT – DCB # 24-003 – CONSIDERATION OF ELECTRIC VEHICLE CHARGING STATIONS

Item 5D on your agenda is a submittal from the County of Los Angeles Internal Services Department (Applicant), seeking approval for electric vehicle charging stations and associated improvements at Marina del Rey Parking Lot 5. The project is located at 4554 Admiralty Way.

PROJECT OVERVIEW

Background

The County of Los Angeles (County) aims to be at the forefront of promoting electric vehicle (EV) adoption and contributing to the expansion of charging infrastructure throughout the region. Transitioning from internal combustion engines to battery electric, plug-in hybrids, and other clean options is critical for improving air quality and reducing greenhouse gas emissions from vehicles in California. The Board of Supervisors adopted the County Sustainability Plan in August 2019 which directs the County to install 5,000 EV charging stations by 2025 and 15,000 charging stations by 2035. The Plan also directs the County to have 100% of new non-emergency light-duty vehicle purchases be zero-emissions by 2025 and 100% of medium-duty vehicles and emergency light-duty vehicle purchases be zero-emissions by 2035. By 2045, 100% of all vehicles in the County fleet are expected to be zero-emissions. Having electric vehicle supply equipment in place throughout the County is pivotal to this transition.

Existing Conditions

The property is an existing surface parking lot with 221 parking spaces.

Proposed Project

The Applicant proposes to install forty electric vehicle charging stations and associated equipment in Marina del Rey Parking Lot 5.

SITE DESIGN

Electric Vehicle Chargers

The Applicant proposes to install an electric vehicle charging station system consisting of forty charging posts, two distribution boards, one load management controller, two utility transformers, a panel board, and a meter cabinet, which would be installed in various areas along Admiralty Way and Bali Way. Each charging posts would be approximately 5” wide by 6’ tall.

Distribution equipment associated with the charging stations would be located on a concrete pad along Bali Way. Each distribution panel would be 5’-2” tall by 1’-8” wide, with a depth of 6.5” and the panel board/meter cabinet would measure 3’-2” wide by 4’-6” tall, with a depth of 11”. The main utility transformer would be 5’-2” wide by 5’-1” tall, with a depth of 5’-11”, while the step-down transformer would measure 3’ wide by 3’-4” tall, with a depth of 1’-10”. Yellow colored 4’ tall steel concrete barrier bollards would be installed around the equipment.

To accommodate American Disability Act (ADA) electric vehicle parking spaces and associated improvements, one existing parking space would be removed. The Applicant proposes to install an accessible loading zone adjacent to the ADA parking stalls, that would include 4” wide diagonal striping with “no parking” painted on the ground. A new accessible walkway/ramp would connect the ADA electric vehicle parking space to the sidewalk along Admiralty Way.

Screening

The Applicant would place a camouflage vinyl wrap on the distribution boards, panel board, meter cabinet, and transformers. The proposed art wrap design would incorporate a scenic view within Marina del Rey, which is consistent with DG. 21 as it would incorporate nautical, marina, and/or water themes to complement the Marina’s waterfront setting.

Landscaping

To accommodate the project, ground cover and shrubs located along Admiralty Way would be removed as the charging posts and other improvements would be installed in the current planter area. Landscaping to match the existing plant palette at the site would be reintroduced in empty spaces once the charging stations are installed. No trees would be removed.

STAFF REVIEW

Staff finds that the proposed project is generally consistent with the Marina del Rey Design Guidelines (DG). DG. 188 notes that projects should screen and buffer antennas and on-site transformers from any public street views. While the equipment proposed

along Bali Way would be visible from street view, the equipment would be screened with a camouflage art wrap that incorporates nautical, marina, and/or water themes to complement the Marina's waterfront setting and reduce the visual impact of the equipment (DG. 21).

Staff recommends <u>APPROVAL</u> of DCB #24-003, subject to the following conditions:

1) **No change shall be made to the approved design without written approval from the Department of Beaches and Harbors Planning Division staff.**

2) **No substantial change shall be made to the approved design without the written consent of the Design Control Board.**

GJ:WO:ts

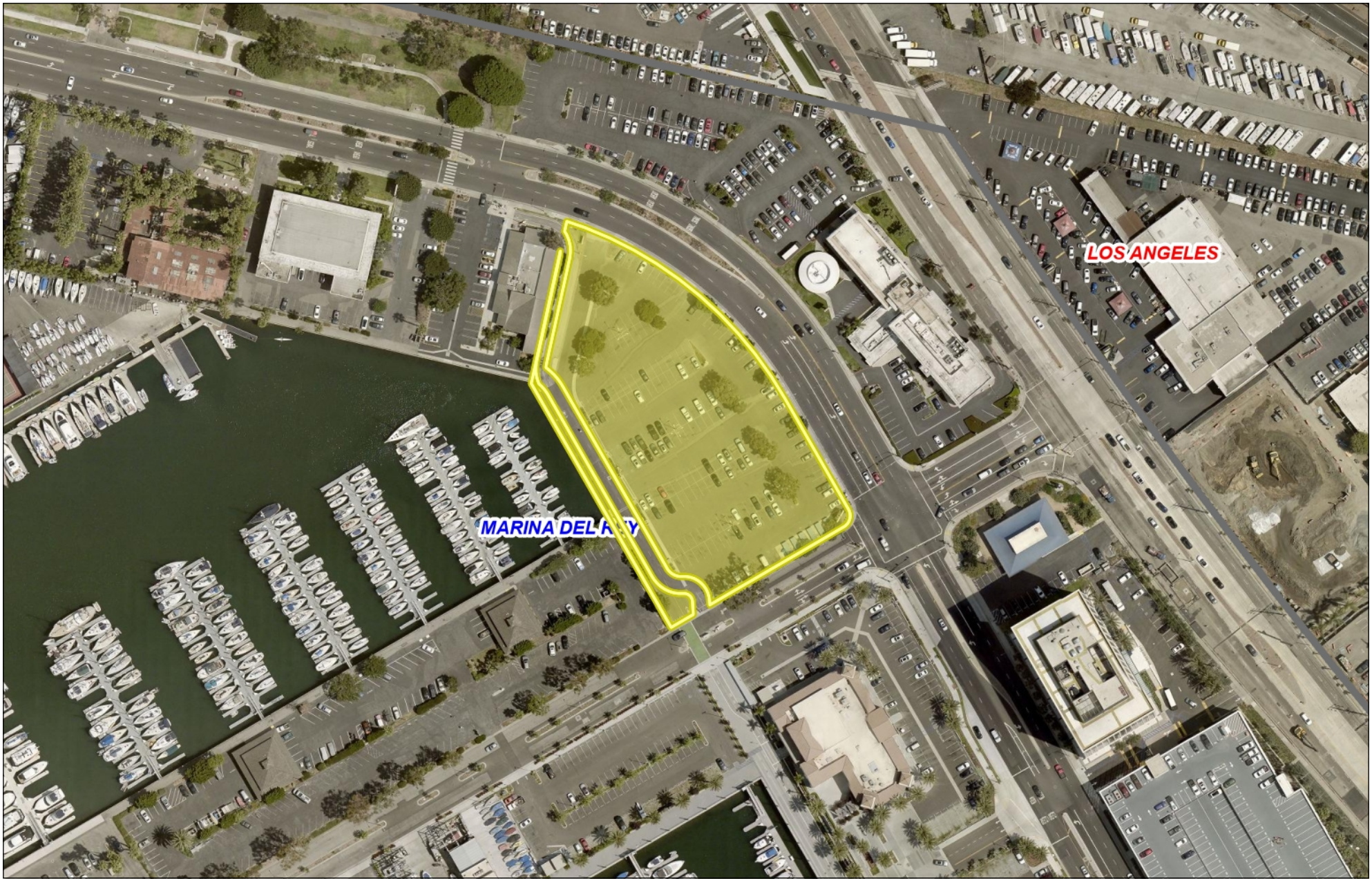

0 78 156 Feet

Marina del Rey Parking Lot #5

Vicinity Map

Printed: 2/14/24

Disclaimer:This map represents a quick representation of spatial imagery or vector layers using GIS-NET. The map should be interpreted in accordance with the GIS-NET Public disclaimer statement. Printed with permission from the Los Angeles County Dept. of Regional Planning. All rights reserved.

LA COUNTY PLANNING

EXISTING SITE CONDITIONS

EXISTING SITE CONDITIONS

ELECTRIC VEHICLE CHARGING STATION (EVCS)

MARINA DEL REY LOT 5
4545 ADMIRALTY WAY
MARINA DEL REY, CA 90292
APN: 4224-007-903

VICINITY MAP

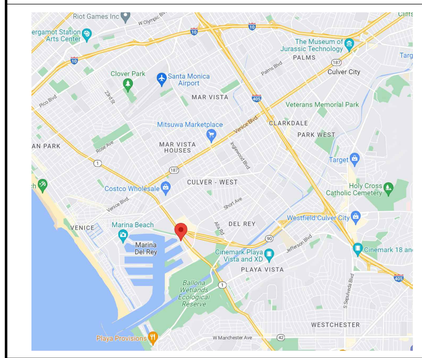

SHEET INDEX

Sheet List Table

SHEET #	SHEET TITLE
T100	TITLE SHEET
E001	ELECTRICAL NOTES & ABBREVIATIONS
E101	OVERALL ELECTRICAL SITE PLAN
E102	ELECTRICAL LAYOUT PLAN
E201	ELECTRICAL SINGLE LINE DIAGRAM
E202	CALCULATIONS AND PANEL SCHEDULES
E301	ELECTRICAL DETAILS
E302	ELECTRICAL DETAILS
E401	EQUIPMENT DATASHEETS

APPLICABLE CODES

ALL WORK SHALL CONFORM TO ALL PERTINENT CODES, REGULATIONS, LAWS, ORDINANCES AND AMENDMENTS REQUIRED IN THE CITY OF MARINA DEL REY IN THE STATE OF CALIFORNIA.

2022 CALIFORNIA ADMINISTRATIVE CODE
2022 CALIFORNIA BUILDING CODE
2022 CALIFORNIA ELECTRICAL CODE
2022 CALIFORNIA MECHANICAL CODE
2022 CALIFORNIA ENERGY CODE
2022 CALIFORNIA FIRE CODE
2022 CALIFORNIA GREEN BUILDING STANDARDS CODE
2022 CALIFORNIA REFERENCED STANDARDS CODE

IN THE EVENT OF CONFLICT, THE MOST RESTRICTIVE CODE SHALL PREVAIL.

GENERAL NOTES

1. ANY PROPOSED HOT WORK SHALL BE CONDUCTED UNDER AN APPROVED EH&S FIRE, LIFE AND GENERAL SAFETY DIVISION HOT WORK PERMIT. ALL HOT WORK PERMITS SHALL BE SUBMITTED AND APPROVED A MINIMUM OF 72 HOURS PRIOR TO ANY HOT WORK OPERATIONS BEGINNING AT THE PROJECT SITE.
2. PROVIDE ALL MATERIALS AND LABOR AS REQUIRED TO ACHIEVE A COMPLETE AND OPERATIONAL SYSTEM.
3. COORDINATE AND OBTAIN APPROVALS FROM ALL RESPECTIVE UTILITY COMPANIES AS REQUIRED FOR A COMPLETE AND FUNCTIONAL INSTALLATION.
4. EQUIPMENT LOCATIONS SHALL BE VERIFIED WITH ARCHITECTURAL DRAWINGS AS WELL AS EQUIPMENT SUPPLIER REQUIREMENTS PRIOR TO ANY ROUGH-IN WORK.
5. THESE DRAWINGS ARE DIAGRAMMATIC AND REPRESENT THE INTENT OF EQUIPMENT, DEVICES, ETC... TO BE CONNECTED AND THE CIRCUITS TO WHICH THEY ARE TO BE CONNECTED TO. CONTRACTOR SHALL INSTALL ALL CONDUIT, J-BOXES, ETC... AS REQUIRED FOR A COMPLETE AND OPERATIONAL SYSTEM.
6. ELECTRICAL CONTRACTOR SHALL VISIT SITE PRIOR TO BID DATE, TO VERIFY ALL EXISTING CONDITIONS TO BE ENCOUNTERED IN THE INSTALLATION OF ALL NEW EQUIPMENT, FIXTURES, DEVICES, FEEDERS, ETC... EXACT INSTALLATION METHOD AND REQUIREMENTS SHALL BE VERIFIED AND DETERMINED PRIOR TO BID DATE. CONTRACTORS SHALL IMMEDIATELY NOTIFY THIS ENGINEER OF ANY REQUIRED MODIFICATIONS WHICH ARE NOT SHOWN ON THESE DRAWINGS. SUBMITTAL OF BID INDICATES CONTRACTOR IS AWARE OF ALL JOB SITE CONDITIONS AND WORK TO BE PERFORMED.
7. COMPLETE ELECTRICAL SYSTEM SHALL BE GROUNDED IN ACCORDANCE WITH THE PRESENTLY ADOPTED EDITION OF THE NEC ARTICLE 250.
8. ALL ELECTRICAL EQUIPMENT SHALL BE LISTED BY UL OR AN APPROVED THIRD PARTY TESTING FACILITY. 110.3(b).
9. DUE TO VOLTAGE DROP AS INDICATED IN ELECTRICAL PLANS, BRANCH CIRCUITS MAY HAVE OVERSIZED CONDUCTORS TERMINATING AT BOTH BRANCH PANEL AND DEVICE/EQUIPMENT CONNECTION. ELECTRICAL CONTRACTOR SHALL MAKE PROVISIONS FOR THESE OVERSIZED CONDUCTORS AND INCLUDE LUG KITS AS REQUIRED.
10. DURING CONSTRUCTION, AT LEAST ONE EXTINGUISHER SHALL BE PROVIDED D ON EACH FLOOR LEVEL AT EACH STAIRWAY, IN ALL STORAGE AND CONSTRUCTION SHEDS, IN LOCATIONS WHERE FLAMMABLE OR COMBUSTIBLE LIQUIDS ARE STORED USED, AND WHERE OTHER SPECIAL HAZARDS ARE PRESENT PER CBC 3315.
11. DUMPSTERS AND TRASH CONTAINERS EXCEEDING 1.5 CUBIC YARDS SHALL NOT BE STORED IN BUILDING OR PLACED WITHIN 5 FEET OF COMBUSTIBLE WALLS, OPENINGS PR COMBUSTIBLE ROOF EAVE LINES UNLESS PROTECTED BY AN APPROVED SPRINKLER SYSTEM OR LOCATED IN A TYPE I OR IIA STRUCTURE SEPARATED BY 10 FEET FROM OTHER STRUCTURES. CONTAINERS LARGER THAN 1 CUBIC YARD SHALL BE OF NON- OR LIMITED-COMBUSTIBLE MATERIALS OR SIMILARLY PROTECTED OR SEPARATED PER CBC 304.4.
12. THE EGRESS PATH SHALL REMAIN FREE AND CLEAR OF ALL OBSTRUCTIONS AT ALL TIMES. NO STORAGE IS PERMITTED IN ANY EGRESS PATHS PER CBC 3301.2.
13. CLEAR FLOORS SPACE OF 48" BY 30" IN FRONT OF ACCESSIBLE EVCS SHALL BE PROVIDED PER CBC SECTION 11B-305.
14. ACCESSIBLE VEHICLE SPACES, ACCESS AISLES SERVING THEM, AND VEHICULAR ROUTES SERVING THEM SHALL BE PROVIDED A VERTICAL CLEARANCE OF 98" MINIMUM PER CBC SECTION 11B-812.4.
15. AT ACCESSIBLE STALL THE RUNNING SLOPE AND CROSS SLOPE FOR THE VEHICLE SPACE AND ACCESS AISLE NOT TO EXCEED 1:48 PER CBC SECTION 11B-812.3.
16. AT HAZARDOUS VEHICULAR AREAS, DETECTABLE WARNING SURFACES SHALL BE YELLOW CONFORMING TO FS 33538 OF FEDERAL STANDARD 595C.
17. ONLY APPROVED DSA-AC DETECTABLE WARNING PRODUCTS AND DIRECTIONAL SURFACES SHALL BE INSTALLED AS PROVIDED IN THE CALIFORNIA CODE OF REGULATIONS (CCR), TITLE 24, PART 1, CHAPTER 5, ARTICLE 2, 3 AND 4.
18. NO WORK IS PROPOSED WITHIN A PUBLIC EASEMENT.
19. ALL ELECTRICAL EQUIPMENT SHALL BE LABELED, LISTED, OR CERTIFIED BY A NATIONALLY RECOGNIZED TESTING LABORATORY ACCREDITED BY THE UNITED STATES OCCUPATIONAL SAFETY HEALTH ADMINISTRATION.
20. SUITABLE FOR REFERENCE. CONTRACTORS SHALL VERIFY ALL PLANS, EXISTING DIMENSIONS, FIELD CONDITIONS ON THE JOB SITE AND SHALL IMMEDIATELY NOTIFY THE ARCHITECT/ENGINEER IN WRITING OF ANY DISCREPANCIES BEFORE PROCEEDING WITH THE WORK OR BE RESPONSIBLE FOR SAME.

PROJECT CONTACTS

OWNER REPRESENTATION:
COUNTY OF LOS ANGELES
13837 FIJI WAY
MARINA DEL REY, CA 90292
P.424.526.7756
CONTACT: WARREN ONTIVEROS

DEVELOPER:
POWERFLEX
392 FIRST STREET
LOS ALTOS, CA 94022
P.650.469.3392

ENGINEERING FIRM:
NAZARENE ENGINEERING
2514 JAMACHA RD. #502-182
EL CAJON, CA 92019
P.619.333.6703

PERMITTING JURISDICTION:
LOS ANGELES COUNTY
DEPT. OF REGIONAL PLANNING
320 WEST TEMPLE STREET
LOS ANGELES, CA 90012
P.213.974.6411

COUNTY:
LOS ANGELES COUNTY

POWER COMPANY:
SOUTHERN CALIFORNIA EDISON

PROJECT SCOPE OF WORK

THE SCOPE OF WORK FOR THIS PROJECT CONSISTS OF (40) EV CHARGING STATIONS DESIGNATED ON THIS PLAN AS SYSTEM A AND SYSTEM B PER THE FOLLOWING:

SYSTEM A
- (20) ALL-IN-ONE 7.7KW EV CHARGERS
- (1) 400A DISTRIBUTION BOARD 'EVA1'
- (1) LOAD MANAGEMENT CONTROLLER ENCLOSURE

SYSTEM B
- (20) ALL-IN-ONE 7.7KW EV CHARGERS
- (1) 400A DISTRIBUTION BOARD 'EVB1'

DISTRIBUTION BOARDS 'EVA1' AND 'EVB1' SHALL BE ROUTED TO:
- (1) 150KVA TRANSFORMER 'XEV1'
- (1) 400A PANELBOARD 'MSB'
- (1) 400A CT AND METER CABINET
- (1) 300KVA UTILITY TRANSFORMER

INTERNAL STAMP

SITE PLAN REVIEW

PERMIT #: RPPL2023006183

PROJECT #: PRJ2023-004181

This plan is APPROVED in compliance with the Los Angeles County Zoning Code and subject to the requirements noted herein. This approval shall expire if it is not used within two years of the approval date and prior to any change in ordinance requirements. This approval shall not be construed to permit the violation of any provision of the Los Angeles County Code or State or Federal Law.

SIGNATURE — PRINT: Clark Taylor

APPROVAL DATE: 11-30-2023 — EXPIRATION DATE: 11-30-2025

BUILDING AND SAFETY DIVISION
Department of Public Works
APPROVED
UNDER LOS ANGELES COUNTY CODE
TITLES 26, 30 AND 31
FMOKRI
PUBLIC WORKS
09/13/2023 3:43:47 PM
This set of plans and specifications must be kept at the job site at all times and it is unlawful to make any changes, modifications or alterations to these plans or specifications without the prior written permission of the Building Official. The stamping of this set of plans and specifications SHALL NOT, under any circumstances, be deemed to permit or to be an approval of any work or activity that violates any provisions of any County Ordinance or State Law

DEPARTMENT OF REGIONAL PLANNING APPROVED

DEVELOPER:
powerflex EDF renewables
392 FIRST STREET
LOS ALTOS, CA 94022
P: 650.469.3392

ELECTRICAL ENGINEER:
nazarene engineering
NAZARENE ENGINEERING
2514 JAMACHA RD. #502-182
EL CAJON, CA 92019
619.333.6703
WWW.NAZENGINEERING.COM

ENGINEERS STAMP:
REGISTERED PROFESSIONAL ENGINEER
NO. 19677
Exp: 9/30/23
ELECTRICAL
STATE OF CALIFORNIA

DATE SIGNED: 06/02/23

PROJECT NUMBER:	2314-03
DRAWN BY:	RF
CHECKED BY:	JB

REVISIONS

REV	DATE	DESCRIPTION	BY
0	05/12/23	IFP PLAN PACKAGE	JB
1	06/02/23	PLAN CHECK #1	JB

SITE ADDRESS
MARINA DEL REY LOT 5

SHEET TITLE
TITLE SHEET

SHEET NUMBER
T100

THE USE OF THESE PLANS AND SPECIFICATIONS SHALL BE RESTRICTED TO THE ORIGINAL SITE FOR WHICH THEY WERE PREPARED AND PUBLICATION THEREOF IS EXPRESSLY LIMITED TO SUCH USE. REPRODUCTION, PUBLICATION, OR RE-USE BY ANY METHOD, IN WHOLE OR IN PART WITHOUT THE EXPRESS CONSENT OF 'NAZARENE ENGINEERING' IS PROHIBITED.

GENERAL ELECTRICAL SPECIFICATIONS

1. THE FOLLOWING ARE ABBREVIATED SPECIFICATIONS. ALL ITEMS NECESSARY FOR A COMPLETE AND OPERABLE JOB (TO THE SATISFACTION OF OWNER) WHETHER SHOWN OR IMPLIED SHALL BE HELD AS THE RESPONSIBILITY OF THIS CONTRACTOR
2. IMPORTANT NOTE: "CONTRACTOR" REFERENCED IN THESE SPECIFICATIONS SHALL INDICATE WORK BY ELECTRICAL CONTRACTOR OR ANY OF HIS SUBCONTRACTORS UNLESS NOTED OTHERWISE.
3. DRAWINGS ARE DIAGRAMMATIC AND INDICATE GENERAL ARRANGEMENT ONLY. COORDINATE INSTALLATION WITH OTHER TRADES TO VERIFY THE ACTUAL SPACE CONDITIONS THAT IS TO BE MAINTAINED. NO ADDITIONAL PAYMENT WILL BE APPROVED FOR FAILURE TO COMPLY.
4. ALL SYMBOLS AND ABBREVIATIONS USED ON THE DRAWINGS ARE CONSIDERED CONSTRUCTION STANDARDS. IF THE CONTRACTOR HAS QUESTIONS REGARDING THEIR EXACT MEANING, THE ENGINEER SHALL BE NOTIFIED FOR CLARIFICATION BEFORE PROCEEDING WITH THE WORK.
5. CONTRACTOR SHALL NOTE SCALE ELECTRICAL DRAWINGS. REFER TO SITE PLANS AND ELEVATIONS FOR EXACT LOCATIONS OF ALL EQUIPMENT AND CONFIRM WITH CONSTRUCTION MANAGER ANY SIZES AND LOCATIONS WHEN NEEDED.
6. CONTRACTOR'S SCOPE OF WORK SHALL INCLUDE ALL ITEMS DEFINED IN THE CONTRACT DOCUMENTS. THE CONTRACT DOCUMENTS INCLUDE, BUT ARE NOT LIMITED TO, THE FOLLOWING: THE CONTRACT, SPECIFICATIONS, AND CONSTRUCTION DRAWINGS. CONTRACTOR SHALL PROVIDE ALL LABOR, MATERIAL, AND EQUIPMENT NECESSARY TO INSTALL ALL ELECTRICAL EQUIPMENT, CONDUIT, WIRING AS SHOWN OR IMPLIED ON THE DRAWINGS AND PROVIDE A COMPLETE OPERATIVE SYSTEM TO THE SATISFACTION OF OWNER.
7. CONTRACTOR SHALL PROVIDE ON-SITE SUPERVISION AT ALL TIMES WHILE THE WORK IS BEING PERFORMED AND SHALL DIRECT ALL WORK, USING HIS BEST SKILL AND ATTENTION. HE SHALL BE SOLELY RESPONSIBLE FOR ALL CONSTRUCTION MEANS, METHODS, TECHNIQUES, PROCEDURES AND SEQUENCES FOR COORDINATING ALL PORTIONS OF THE WORK UNDER THE CONTRACT.
8. INSTALLATION OF ALL ELECTRICAL EQUIPMENT, DEVICES, CONDUITS, ETC. MUST BE COORDINATED WITH ALL OTHER TRADES. COORDINATE SHUTDOWN TIMES AND WORKING HOURS WITH BUILDING OWNER, INCLUDING OFF HOURS, WEEKEND, AND HOLIDAY WORK AS REQUIRED.
9. ANY DISCREPANCIES FOUND WITHIN THE CONTRACT DOCUMENTS SHALL BE REPORTED TO THE OWNER IN WRITING PRIOR TO THE AWARD OF THE CONTRACT AND AN ADDENDUM WILL BE ISSUED TO COVER SAME.
10. GUARANTEE - CONTRACTOR SHALL FURNISH OWNER WITH A WRITTEN GUARANTEE TO PROMPTLY REMEDY ALL DEFECTS OF WORK OR MATERIALS WITHOUT CHARGE FOR A PERIOD OF ONE YEAR AFTER FINAL ACCEPTANCE AND INSPECTION.
11. MATERIALS - ALL MATERIALS AND EQUIPMENT SHALL BE NEW IN ORIGINAL CONTAINERS/WRAPPINGS, SHALL BE SPECIFICATION GRADE AND LABELED OR LISTED BY U.L. OR AN ACCREDITED TESTING ORGANIZATION AS REQUIRED BY LOCAL INSPECTORS.
12. CONTRACTOR SHALL PROVIDE ADEQUATE AND REQUIRED LIABILITY INSURANCE FOR PROTECTION AGAINST PUBLIC LOSS AND ANY/ALL PROPERTY DAMAGE FOR THE DURATION OF WORK .
13. ALL EQUIPMENT SHALL BE DESIGNED TO OPERATE ON VOLTAGE AND PHASE SPECIFIED. CONTRACTOR FURNISHING EQUIPMENT OTHER THAN INDICATED SHALL BE RESPONSIBLE FOR ANY CHANGES IN CONDUCTORS, RACEWAYS, SWITCHES, MAIN FEEDERS, AND APPURTENANCES AND PAY ALL ASSOCIATED COSTS. REQUIREMENTS FOR ANY INCREASE IN CAPACITIES SHALL BE REVIEWED BY ENGINEER.
14. CONTRACTOR SHALL CONFIRM WITH LOCAL UTILITY COMPANY ANY/ALL REQUIREMENTS SUCH AS THE: LUG SIZE RESTRICTIONS, CONDUIT ENTRY, SIZE OF TRANSFORMERS, SCHEDULED DOWNTIME FOR THE OWNERS' CONFIRMATION, ETC. ANY/ALL CONFLICTS SHALL BE BROUGHT TO THE ATTENTION OF THE CONSTRUCTION MANAGER, PRIOR TO BEGINNING ANY WORK.
15. WHERE STRUCTURAL OPENINGS ARE NOT AVAILABLE, THE CONTRACTOR SHALL CORE DRILL OR CUT CHASES IN WALLS AND FLOORS AS REQUIRED. ALL NEW OPENINGS SHALL BE COORDINATED WITH THE ENGINEER. ALL PENETRATIONS OF THE BUILDING WALLS, CEILING AND FLOORS, THE CONTRACTOR SHALL SEAL WITH QUALITY CAULK, FIRE RATED AND WATERTIGHT, SUBMITTED FOR APPROVAL BY THE OWNER.
16. TRASH REMOVAL: CONTRACTOR SHALL REMOVE ALL TRASH CREATED BY HIMSELF OR HIS SUBCONTRACTORS DUE TO DEMOLITION OR CONSTRUCTION. THE CONTRACTOR SHALL ALSO REMOVE TRASH CREATED BY OTHER SUBCONTRACTORS INCLUDING, BUT NOT LIMITED TO, CABLE REELS, CARDBOARD BOXES AND PACKING. PROMPTLY CLEAN-UP ALL SOILING, DEBRIS AND OTHER UNSIGHTLY OR HAZARDOUS CONDITIONS, CAUSED BY WORK OR DELIVERIES UNDER THIS CONTRACT, FROM THE BUILDING GROUNDS, ENTRIES, CORRIDORS, STAIRWAYS, ELEVATORS OR OTHER PUBLIC AREAS. ALL SHALL BE REMOVED FROM THE SITE IN A TIMELY FASHION TO A LEGAL DISPOSAL FACILITY. ALL TRASH THAT CAN BE RECYCLED, SHOULD BE RECYCLED.
17. SIGNAGE: CONTRACTOR SHALL MAINTAIN SECURITY AROUND PERIMETER OF CONSTRUCTION SITE DURING ALL HOURS BY ERECTING TEMPORARY FENCING OR BARRICADES AS APPROVED BY LOCAL GOVERNING AUTHORITIES. SIGNAGE SHALL BE POSTED WITH NOTIFICATIONS OF "NO TRESPASSING" AND "CONSTRUCTION AREA".
18. CHECK ACCURACY OF ALL DIMENSIONS IN THE FIELD. UNLESS SPECIFICALLY NOTED, DO NOT FABRICATE ANY MATERIALS OFF SITE, NOR DO ANY CONSTRUCTION UNTIL THE ACCURACY OF DRAWING DIMENSIONS HAVE BEEN VERIFIED AGAINST ACTUAL FIELD DIMENSIONS.
19. CONTRACTOR SHALL BE RESPONSIBLE FOR ALL NECESSARY CUTTING, SUBSEQUENT PATCHING, AND REQUIRED FLASHING FOR ALL ITEMS NECESSARY FOR ELECTRICAL PART OF THE CONTRACT. PATCH, PAINT, AND REPAIR ANY AREA DAMAGED TO THE SATISFACTION OF THE BUILDING OWNER.
20. THE EXACT LOCATIONS OF ALL ELECTRICAL DEVICES, EQUIPMENT AND CONDUIT, AS SHOWN ON THE DRAWING, IS APPROXIMATE. WHEN NOT SHOWN IN DETAIL, THE EXACT LOCATION OR ROUTING SHALL BE DETERMINED BY THE CONTRACTOR, SUBJECT TO THE APPROVAL OF OWNER.
21. THE CONTRACTOR SHALL PROVIDE ALL NECESSARY BLOCKING, BACKING, FRAMING, HANGERS OR OTHER SUPPORT FOR THE MOUNTING AND SUPPORT OF ALL ITEMS REQUIRING THE SAME AS REQUIRED BY NEC.
22. TRENCHING AND BACK FILL: CONTRACTOR SHALL PROVIDE FOR ALL UNDERGROUND INSTALLED CONDUIT AND/OR CABLES INCLUDING EXCAVATION AND BACKFILLING AND COMPACTION.
23. WHEN DIRECTIONAL BORING IS REQUIRED, CONTRACTOR SHALL INSTALL A LOOSE TONING WIRE WITHIN INSTALLED CONDUIT TO ALLOW FOR IDENTIFICATION OF UNDERGROUND CONDUITS.
24. ALL BOLTS SHALL BE STAINLESS STEEL.
25. FOR UNDERGROUND RACEWAYS, PROVIDE ADDITIONAL SLACK IN CONDUCTORS AND CONDUIT EXPANSION JOINTS IN ORDER TO ALLOW FOR EARTH MOVEMENT FROM SETTLEMENT, FROST, ETC IN ORDER TO PREVENT DAMAGE TO THE CONDUCTORS OR TO THE EQUIPMENT CONNECTED TO THE RACEWAYS PER THE NEC.

LICENSE AND CERTIFICATION OF INSPECTION NOTES

1. CONTRACTOR SHALL BE RESPONSIBLE FOR NOTIFICATION OF ALL GOVERNING AGENCIES THAT REQUIRE SITE INSPECTION OF THE WORK AND/OR SIMPLY NOTIFICATION. THE CONTRACTOR SHALL OBTAIN AND PAY FOR PERMITS, LICENSES AND INSPECTIONS NECESSARY FOR PERFORMANCE OF THE WORK.
2. CONTRACTOR AND ALL OF HIS SUBCONTRACTORS THAT DO ANY WORK ON THIS PROJECT SHALL BE CURRENTLY LICENSED BY ALL AGENCIES WHICH GOVERN OVER THE LAND(S) ON WHICH CONSTRUCTION IS TO BE PERFORMED. CONTRACTOR SHALL SECURE ALL PERMITS AND INSPECTIONS AS REQUIRED, ALL COSTS SHALL BE BORNE BY CONTRACTOR.
3. THE CONTRACTOR SHALL SECURE AND PAY FOR ALL PERMITS, LICENSES AND INSPECTIONS INCIDENTAL TO WORK UNDER THIS CONTRACT. WHEN THE WORK IS COMPLETED, THE REQUIRED CERTIFICATES OF APPROVAL SHALL BE FURNISHED TO THE BUILDING OWNER. CONTRACTOR MUST BE LICENSED IN THE STATE, COUNTY AND CITY OF THE PROJECT SITE.

CODE AND ORDINANCE NOTES

1. ALL WORK SHALL BE DONE IN STRICT ACCORDANCE WITH CURRENT VERSION OF NEC ADOPTED BY THE AUTHORITY HAVING JURISDICTION AND ALL APPLICABLE CODES AND ORDINANCES. CODES AND ORDINANCES SHALL TAKE PRECEDENCE OVER THE DRAWINGS AND SPECIFICATIONS ONLY IN CASE OF CONFLICT AND SHALL INCLUDE BUT NOT BE LIMITED TO:
   - A. UL - UNDERWRITERS LABORATORIES
   - B. NEC - NATIONAL ELECTRICAL CODE
   - C. NEMA - NATIONAL ELECTRICAL MANUFACTURERS ASSOCIATION
   - D. OSHA - OCCUPATIONAL SAFETY AND HEALTH ACT
   - E. SBC - STANDARD BUILDING CODE
   - F. NFPA - NATIONAL FIRE PROTECTION AGENCY

EXISTING CONDITIONS AND DEMOLITION NOTES

1. ALL ELECTRICAL DEMOLITION WORK, INCLUDING MATERIAL REMOVAL FROM THE SITE, SHALL BE THE RESPONSIBILITY OF THIS CONTRACTOR. BEFORE PROCEEDING WITH THE DEMOLITION WORK, THE CONTRACTOR SHALL OBTAIN FROM THE BUILDING OWNER A LIST OF ANY REMOVED ITEMS TO BE SALVAGED. ALL OTHER REMOVED MATERIALS AND EQUIPMENT SHALL BE PROPERLY DISCARDED OFF THE PREMISES.
2. CONTRACTOR SHALL BE RESPONSIBLE FOR ANY DAMAGE TO EXISTING PROPERTY RESULTING FROM THE CONSTRUCTION ACTIVITIES. CONTRACTOR SHALL REMOVE ALL DEBRIS FROM THE SITE AT THE COMPLETION OF WORK.
3. EXISTING UTILITIES AND CONDITIONS ARE SHOWN FROM FIELD DATA AND EXISTING DOCUMENTS AND ARE NOT NECESSARILY COMPLETE OR ACCURATE. ALL FIELD CONDITIONS SHALL BE VERIFIED BY CONTRACTOR BEFORE START OF CONSTRUCTION.
4. CONTRACTOR SHALL BE RESPONSIBLE TO LOCATE, EXPOSE, AND DETERMINE IF CONFLICTS EXIST WITH THE PROPOSED IMPROVEMENTS. CONTRACTOR SHALL NOTIFY THE OWNER IN ORDER TO RESOLVE ANY CONFLICTS. EXISTING ELECTRICAL CONDUIT, WIRING, ETC. DAMAGED DURING RENOVATION SHALL BE REPLACED IN LIKE KIND AND CHARACTER, AND AT THE EXISTING UTILITY LINES, DRAIN OR FIELD TILE DAMAGED SHALL BE REPAIRED OR REPLACED, AS NEEDED, IN LIKE KIND AND CHARACTER. IT SHALL BE THE RESPONSIBILITY OF THE CONTRACTOR TO LOCATE ALL EXISTING CONDUITS, CONTROL WIRING,ETC. WHETHER SHOWN HEREON OR NOT, AND TO PROTECT THEM FROM DAMAGE. THE CONTRACTOR SHALL BEAR ALL EXPENSES FOR REPAIR OR REPLACEMENT OF PROPERTY DAMAGED IN CONJUNCTION WITH THE EXECUTION OF WORK.
5. THE CONTRACTOR SHALL NOTIFY THE OWNER OF ANY CONFLICTS OR DISCREPANCIES IN THE CONTRACT DOCUMENTS OR FIELD CONDITIONS PRIOR TO EXECUTING THE WORK IN QUESTION. THE CONTRACTOR SHALL NOTIFY THE CONSTRUCTION MANAGER IF DETAILS ARE CONSIDERED UNSOUND, UNSAFE, NOT WATERPROOF, OR NOT WITHIN CUSTOMARY TRADE PRACTICE. IF WORK IS PERFORMED, IT WILL BE ASSUMED THAT THERE IS NO OBJECTION TO THE DETAIL. DETAILS ARE INTENDED TO SHOW THE END RESULT OF THE DESIGN. MINOR MODIFICATIONS MAY BE REQUIRED TO SUIT JOB CONDITIONS, AND SHALL BE INCLUDED AS PART OF THE WORK.
6. SITE VISIT - CONTRACTOR SHALL VISIT THE SITE AND FAMILIARIZE THEMSELVES WITH ALL CONDITIONS AFFECTING HIS WORK. NO EXTRAS WILL BE PERMITTED FOR LACK OF KNOWLEDGE OF EXISTING CONDITIONS. QUANTITIES OF MATERIALS SHALL BE PER CONTRACTOR'S MEASUREMENTS.

DISPENSING SAFETY NOTE

1. PER NEC 625.22 - THE USER INTERFACE (DISPENSER) IS CONTROLLED BY THE ELECTRICAL EQUIPMENT POWER CABINET AND THE FOLLOWING PRECAUTIONS HAVE BEEN TAKEN TO ENSURE THE SAFETY OF CUSTOMERS AND THOSE AROUND THE EQUIPMENT. BEFORE ANY VOLTAGE OR CURRENT IS APPLIED TO THE DISPENSER, THE POWER CABINET MUST COMMUNICATE WITH THE ELECTRIC VEHICLE. THERE IS A 'HANDSHAKE' BETWEEN THE ELECTRIC VEHICLE AND THE DISPENSER CONFIRMING THAT THE ELECTRIC VEHICLE ID, TYPE, & SYSTEM INFORMATION AND THAT THE ELECTRIC VEHICLE SYSTEMS ARE IN WORKING ORDER TO ACCEPT THE CHARGE. VOLTAGE IS THEN APPLIED TO THE POWER SOCKETS IN THE DISPENSER AND ONCE THE VOLTAGE READING FROM THE ELECTRIC VEHICLE IS VERIFIED AS THE SAME IN THE POWER CABINET, THEN CURRENT BEGINS TO FLOW. IF AT ANY POINT IN THIS PROCESS A FAULT IS DETECTED, THE CHARGING WILL STOP IMMEDIATELY, WITHIN A MATTER OF MILLISECONDS. DURING THE NORMAL CHARGING CYCLE, IF ANY FAULT OR IRREGULARITY IS DETECTED, THE CHARGING WILL AGAIN STOP WITHIN MILLISECONDS OF DETECTION. BEYOND THIS LOGIC PROTECTION, THERE IS PHYSICAL PROTECTION FROM OVER-CURRENT OR OVER-VOLTAGE WITHIN EACH OF THE POWER CABINET. BEYOND THAT, FAST ACTING FUSES ALSO PROTECT THE ELECTRIC VEHICLE OUTPUTS FROM OUTPUTTING TOO HIGH OF A CURRENT. FINALLY, A MANUAL EMERGENCY STOP BUTTON IS AVAILABLE ON THE FRONT OF THE DISPENSER, JUST BELOW THE INTERFACE DISPLAY WINDOW (RED).

POST CONSTRUCTION AND PROJECT CLOSEOUT DOCUMENTATION NOTES

1. AS-BUILT REQUIREMENTS: DO NOT USE RECORD DOCUMENTS FOR CONSTRUCTION PURPOSES. TO PROTECT RECORD DOCUMENTS FROM DETERIORATION AND LOSS, STORE IN A SECURE, FIRE-RESISTANT LOCATION. PROVIDE ACCESS TO RECORD DOCUMENTS FOR THE OWNER'S REFERENCE DURING NORMAL WORKING HOURS. MAINTAIN A CLEAN, UNDAMAGED SET OF BLUE OR BLACK LINE PRINTS OF CONTRACT DRAWINGS AND SHOP DRAWINGS. MARK THE SET TO SHOW THE ACTUAL INSTALLATION WHERE THE INSTALLATION VARIES SUBSTANTIALLY FROM THE WORK AS ORIGINALLY SHOWN. MARK DRAWINGS THAT ARE MOST CAPABLE OF SHOWING CONDITIONS FULLY AND ACCURATELY. WHERE SHOP DRAWINGS ARE USED, RECORD A CROSS-REFERENCE AT THE CORRESPONDING LOCATION ON THE CONTRACT DRAWINGS. GIVE PARTICULAR ATTENTION TO CONCEALED ELEMENTS THAT WOULD BE DIFFICULT TO MEASURE AND RECORD AT A LATER DATE. MARK RECORD SETS WITH RED ERASABLE PENCIL. USE OTHER COLORS TO DISTINGUISH BETWEEN VARIATIONS IN SEPARATE CATEGORIES OF THE WORK. MARK NEW INFORMATION THAT IS IMPORTANT TO THE OWNER BUT WAS NOT SHOWN ON THE CONTRACT DRAWINGS, DETAILS OR SHOP DRAWINGS. NOTE RELATED CHANGE ORDER NUMBERS WHERE APPLICABLE. NOTE RELATED RECORD DRAWING INFORMATION AND PRODUCT DATA. UPON COMPLETION OF THE WORK, SUBMIT ONE (1) COMPLETE SET OF RECORD DOCUMENTS TO THE CONSTRUCTION MANAGER FOR THE OWNER'S RECORDS. CONTRACTOR SHALL SUBMIT AS-BUILT SET OF PLANS TO THE ENGINEER WITHIN 7 DAYS OF COMPLETION OF CONSTRUCTION.

ELECTRICAL EQUIPMENT NOTE

1. ALL EQUIPMENT SHALL BE DESIGNED TO OPERATE ON VOLTAGE AND PHASE SPECIFIED. CONTRACTOR FURNISHING EQUIPMENT OTHER THAN INDICATED SHALL BE RESPONSIBLE FOR ANY CHANGES IN CONDUCTORS, RACEWAYS, SWITCHES, MAIN FEEDERS, AND APPURTENANCES AND PAY ALL ASSOCIATED COSTS. REQUIREMENTS FOR ANY INCREASE IN CAPACITIES SHALL BE REVIEWED BY ENGINEER.

FIRESTOPPING AND SEALING ELECTRICAL PENETRATION NOTES

1. CONTRACTOR SHALL FURNISH AND INSTALL FIRESTOPPING FOR SEALING AROUND ELECTRICAL PENETRATIONS THROUGH FIRE OR SMOKE BARRIERS, AND FLOORS.
2. PROVIDE SHOP DRAWINGS OF EACH CONDITION REQUIRING PENETRATION SEALS AND THE PROPOSED UL SYSTEMS MATERIALS, ANCHORAGE, METHODS OF INSTALLATION, AND ACTUAL ADJACENT CONSTRUCTION. SUBMITTAL PACKAGE SHALL ALSO INCLUDE A COPY OF THE UL ILLUSTRATION OF EACH PROPOSED SYSTEM INDICATING MANUFACTURER APPROVED MODIFICATIONS (IF APPLICABLE) AND THE MANUFACTURER'S SPECIFICATIONS, RECOMMENDATIONS, INSTALLATION INSTRUCTIONS, AND MAINTENANCE INSTRUCTIONS.
3. FIRESTOPPING MATERIALS SHALL BE INTUMESCENT SAFETY BARRIERS DESIGNED TO BLOCK THE SPREAD OF FIRE AND SMOKE THROUGH PENETRATIONS CREATED BY ELECTRICAL INSTALLATIONS IN FIRE RATED WALLS AND FLOORS. MATERIALS SHALL BE FLAME, TOXIC FUME, AND WATER RESISTANT AND SHALL HAVE A MINIMUM 3 HOUR FIRE RATING. FIRE RATING SHALL BE DEFINED BY TESTS CONDUCTED BY ASTM, UL OR OTHER TESTING AND INSPECTION AGENCIES ACCEPTABLE TO AUTHORITIES HAVING JURISDICTION.
4. PROVIDE MATERIALS BY THE FOLLOWING MANUFACTURERS TO SUIT THE APPLICATION: SPECIFIED TECHNOLOGIES, INC (STI), SOMERVILLE, NJ; TREMCO, INC., BEACHWOOD, OH; OR 3M INC., MINNEAPOLIS, MN.

GROUNDING AND BONDING FOR ELECTRICAL SYSTEM NOTES

1. ALL RACEWAYS AND EQUIPMENT SHALL BE GROUNDED IN ACCORDANCE WITH THE NEC AND ANY LOCAL CODES.
2. EQUIPMENT GROUNDING CONDUCTORS SHALL BE INSULATED WITH GREEN-COLORED INSULATION.
3. GROUNDING ELECTRODE CONDUCTORS SHALL BE STRANDED CABLE.
4. MATERIALS AND CONNECTION COMPONENTS FOR GROUNDING AND BONDING SHALL BE MANUFACTURED BY ERICO, THOMAS & BETTS, BURNDY, OR ILSCO.

ELECTRICAL IDENTIFICATION NOTES

1. PROVIDE NAMEPLATES FOR ALL MAJOR ELECTRICAL EQUIPMENT AND ON EQUIPMENT AS DIRECTED BY OWNER.
   - 1.1 PROVIDE LAMOCOID NAMEPLATE ENGRAVED WITH WHITE LETTERS.
   - 1.2 NAMEPLATE SHALL BE THE FOLLOWING COLORS:
     - GREEN - NORMAL POWER ON 480/277 VOLT SYSTEM
     - BLACK - NORMAL POWER ON 208/120 VOLT SYSTEM
     - RED - EMERGENCY POWER (ALL VOLTAGES)
   - 1.3 SECURE NAMEPLATE TO EQUIPMENT WITH TWO SHEET METAL SCREWS.
   - 1.4 PROVIDE A NAMEPLATE FOR EVERY MAJOR ELECTRICAL DEVICE OR ELECTRICAL CONTROLS SUCH AS: SWITCHBOARDS, DISTRIBUTION PANELS, PANELBOARDS, LIGHTING CONTROL PANELS, STARTERS, DISCONNECT SWITCHES, ETC. (AS APPLICABLE).
   - 1.5 EQUIPMENT DESIGNATION SHOULD INDICATE NAME OF PANELBOARD OR TYPE OF EQUIPMENT BE SERVED (I.E. "PANEL LPA", "PUMP CWP-1").
   - 1.6 SYSTEM VOLTAGE SHALL INDICATE VOLTAGE AND PHASE SUCH AS: 48O/277V,3ϕ, 240/120V,1ϕ, ETC.
   - 1.7 THE THIRD LINE OF TEXT SHALL INDICATE UPSTREAM POWER SOURCE IDENTIFIED BY ITS NAME, SUCH AS "TRANSFORMER T1", PANEL "LPA", ETC.

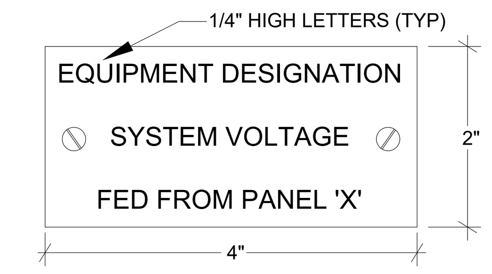

2. PROVIDE ALL FEEDERS AND BRANCH CIRCUIT WIRING WITH COLOR CODED VINYL TAPE WRAPPED A MINIMUM OF 1.5 TIMES AROUND CIRCUMFERENCE OF JACKET/SHIELDING TO DESIGNATE PHASE.
3. COLOR CODING OF CONDUCTORS SHALL BE PER OWNERS REQUIREMENTS.
4. CONTRACTOR SHALL PLACE TWO LENGTHS OF WARNING TAPE AT A DEPTH OF 12" BELOW GROUND AND DIRECTLY ABOVE ELECTRICAL SERVICE CONDUITS. CAUTIONS TAPE TO READ "CAUTION BURIED ELECTRIC"

WIRING METHOD NOTES

1. WIRING - ALL CONDUCTORS SHALL BE EQUAL TO OR BETTER THAN MINIMUM #12 AWG FOR POWER, #14 AWG FOR CONTROL WITH 98% CONDUCTIVITY STRANDED COPPER WITH TYPE (THWN-2) INSULATION, 600V, COLOR CODED, UNLESS NOTED ALUMINUM (AL). ALUMINUM CONDUCTORS SHALL BE LIMITED TO SERVICE ENTRANCE CONDUCTORS ONLY. ALUMINUM CONDUCTORS SHALL NOT BE PERMITTED FOR ANY WIRING PAST THE MAIN SERVICE ENTRANCE BUSS WITHIN SWITCH GEAR. REFER TO "ALUMINUM CONDUCTOR REQUIREMENTS" THIS SHEET. ALL CONDUCTORS SHALL BE 90°C RATED CONDUCTORS, UNLESS NOTED OTHERWISE. PROVIDE SOLID OR STRANDED FOR #10 AWG AND SMALLER, STRANDED FOR #8 AWG AND LARGER. UNLESS NOTED OTHERWISE ON DRAWINGS.
2. WIRE SIZE OF BRANCH CIRCUITS SHALL BE ADJUSTED TO COMPENSATE FOR VOLTAGE DROP BASED UPON ACTUAL CONDUIT ROUTING. CONTRACTOR SHALL MAINTAIN VOLTAGE DROP AS RECOMMENDED BY NEC (NOT TO EXCEED 3%).
3. PROVIDE A SEPARATE NEUTRAL FOR EACH BRANCH CIRCUIT, FEEDER, ETC. NEUTRALS ARE NOT PERMITTED TO BE SHARED.
4. CONNECTORS FOR POWER CONDUCTORS: CONTRACTOR SHALL USE PRESSURE TYPE INSULATED TWIST-ON CONNECTORS FOR NO. 10 AWG AND SMALLER. USE SOLDERLESS MECHANICAL TERMINAL LUGS FOR NO. 8 AWG AND LARGER.
5. ALL CONNECTIONS SHALL BE MADE WITH A PROTECTIVE COATING OF AN ANTI-OXIDE COMPOUND SUCH AS "NO-OXIDE A" BY DEARBORNE CHEMICAL CO. COAT ALL WIRE SURFACES BEFORE CONNECTING. EXPOSED COPPER SURFACES, INCLUDING GROUND BARS, SHALL BE TREATED - NO SUBSTITUTIONS.
6. CABLES - MC CABLE IS NOT PERMITTED.
7. PROVIDE WIRE AND CABLE MANUFACTURED BY ONE OF THE FOLLOWING: AMERICAN INSULATED WIRE CORPORATION; NEXANS; CERROWIRE; SOUTHWIRE; OR ENCORE WIRE.
8. PROVIDE CONNECTORS MANUFACTURED BY ONE OF THE FOLLOWING: AMP INCORPORATED; GENERAL SIGNAL, O-Z/GEDNEY UNIT; SQUARE D COMPANY, ANDERSON; ILSCO; OR BURNDY.

ALUMINUM CONDUCTOR REQUIREMENT NOTES

1. ALUMINUM CONDUCTORS SHALL ONLY BE PERMITTED FOR SERVICE ENTRANCE CONDUCTORS. ALUMINUM CONDUCTORS SHALL NOT BE PERMITTED FOR ANY WIRING PAST THE MAIN SERVICE ENTRANCE BUSS WITHIN SWITCHBOARD.
2. ALUMINUM CONDUCTOR GRADE SHALL BE MINIMUM AA-8000 OR THE NEWEST ALUMINUM CONDUCTOR SPECIFICATION BEING USED BY THE INDUSTRY.
3. THE CONTRACTOR SHALL ABIDE BY ALL ARTICLES RELATED TO ALUMINUM CONDUCTORS IN THE LATEST ISSUE OF THE NEC.
4. ALUMINUM CONDUCTORS SHALL ONLY BE TERMINATED USING ALUMINUM RATED CONNECTIONS. CONTRACTOR SHALL VERIFY TERMINATIONS ON EACH DEVICE OR EQUIPMENT BEFORE START OF WORK FOR RATED ALUMINUM CONNECTORS.
5. THE CONTRACTOR SHALL ABIDE BY ALL ALUMINUM WIRING INSTALLATION STANDARDS AS REQUIRED BY THE NEIS (NATIONAL ELECTRICAL INSTALLATION STANDARDS) PUBLISHED BY THE NECA (NATIONAL ELECTRICAL CONTRACTORS ASSOCIATION). THE CONTRACTOR SHALL ABIDE BY ALL STANDARDS IN THE NECA / AA - 2006, WHICH DEFINES MINIMUM STANDARDS OF QUALITY AND WORKMANSHIP. A SUMMARY OF SOME OF THE REQUIREMENTS FOLLOW:
   - A. TERMINATE WITH COMPRESSION CONNECTORS, NO RING CUTS OF THE INSULATION, CRIMP ONLY WITH A CRIMP TOOL AND THE CORRECT DIE AS REQUIRED BY THE MANUFACTURER.
   - B. ALL CONDUCTORS TO RECEIVE ANTI-OXIDATIVE COATING DURING INSTALLATION.
   - C. TERMINATING WITH A SET SCREW CONNECTOR, THE SCREW SHALL BE TIGHTENED USING ONLY A TORQUE WRENCH.
   - D. NECA / AA RECOMMENDS BELLVILLE WASHERS WHEN CONNECTING ALUMINUM CONDUCTORS TO COPPER BUS BARS. ABIDE BY ALL NECA / AA RECOMMENDATIONS.
   - E. DO NOT USE PIN CONNECTORS (WIRE ADAPTERS) UNLESS ABSOLUTELY NECESSARY. USE ALL / ANY OTHER OPTIONS, AND IF REQUIRED, PROVE TO ENGINEER BEFORE INSTALLING. IF USED, FOLLOW U.L. GUIDE FOR WIRE CONNECTORS (ZMOW), AND PROVIDE THE SPECIAL TOOLS REQUIRED BY THE MANUFACTURER. DIE-LESS CRIMPERS WILL NOT BE ACCEPTED.

SAFETY SWITCH NOTES

1. ALL DISCONNECT SWITCHES SHALL BE HEAVY-DUTY CONSTRUCTION WITH LOCKABLE HANDLES SIZED AS NOTED ON THE DRAWINGS AND/OR RISER DIAGRAM. PROVIDE NEMA ENCLOSURE AS REQUIRED BY EXPOSURE TYPE. ALL FUSIBLE SWITCHES SHALL BE PROVIDED WITH DUAL ELEMENT FUSES SIZED PER THE EQUIPMENT MANUFACTURER'S RECOMMENDATION.

FUSE NOTES

1. FUSES SHALL BE DUAL ELEMENT, TIME DELAY CURRENT LIMITING. CONTRACTOR SHALL COORDINATE FUSE SIZES WITH EQUIPMENT MANUFACTURER'S REQUIREMENTS AND PER THE NEC.
2. PROVIDE FUSES MANUFACTURED FROM ONE OF THE FOLLOWING: COOPER BUSSMAN, INCORPORATED; EAGLE ELECTRIC MANUFACTURING COMPANY INCORPORATED, COOPER INDUSTRIES INCORPORATED; FERRAZ SHAWMUT INCORPORATED.

RACEWAY AND BOX NOTES

1. RACEWAYS: UNLESS NOTED OTHERWISE, ALL EXPOSED CONDUIT SHALL BE R.G.S. AND CONVERTED 6" BELOW FINISHED GRADE TO BE PVC, SCHEDULE 40. PROVIDE WEATHERPROOF FLEX CONNECTIONS WHERE REQUIRED. CONTRACTOR SHALL PROVIDE JUNCTION AND/OR PULL BOXES WHERE SHOWN ON THE DRAWINGS, OR AS REQUIRED, WHETHER SHOWN ON THE DRAWINGS OR NOT, AND SIZED PER THE NEC. PROVIDE NON-METALLIC ENCLOSURE WITH OPEN BOTTOM AND GASKETED COVER MANUFACTURED BY QUAZITE OR EQUIVALENT WITH DRIVE-OVER COVER ABLE TO WITHSTAND OCCASIONAL NON-DELIBERATE LIGHT VEHICULAR TRAFFIC. LABEL COVER TO SUIT INSTALLATION (I.E. "POWER" "COMMUNICATIONS", "LIGHTING", ETC.) AND INSTALL PER MANUFACTURER'S RECOMMENDATIONS.
   - A. EXTERIOR ABOVE GROUND: R.G.S.
   - B. BELOW GRADE: SCHEDULE 40 PVC
2. ALL WIRING SHALL BE INSTALLED IN CONDUIT. ALL CONDUIT SHALL BE A MINIMUM OF 3/4".
3. CONTRACTOR SHALL PLUG AND CAP EACH END OF SPARE AND EMPTY CONDUITS AND PROVIDE TWO SEPARATE PULL STRINGS - 200 LBS TEST POLYETHYLENE CORD. ALL CONDUIT BENDS SHALL BE A MINIMUM OF 3 FT. RADIUS. RGS CONDUITS WHEN SPECIFIED, SHALL MEET UL-6 FOR GALVANIZED ALL FITTINGS SHALL BE SUITABLE FOR USE WITH THREADED RIGID CONDUIT. COAT ALL THREADS WITH 'BRITE ZINC' OR 'GOLD GALV'.
4. OUTLET BOXES SHALL BE CAST ALLOY WITH THREADED HUBS IN WET/DAMP LOCATIONS AND SPECIAL ENCLOSURES FOR OTHER CLASSIFIED AREAS.
5. PROVIDE METAL CONDUIT AND TUBING MANUFACTURED BY ONE OF THE FOLLOWING: ALFLEX CORPORATION; ANAMET INCORPORATED, ANACONDA METAL HOSE; ANIXTER BROTHERS INCORPORATED; CAROL CABLE COMPANY INCORPORATED; ELECTRI-FLEX COMPANY; GRINNELL COMPANY, ALLIED TUBE AND CONDUIT DIVISION; MONOGRAM COMPANY, AFC; REPUBLIC CONDUIT; OR WHEATLAND TUBE COMPANY.
6. PROVIDE NONMETALLIC CONDUIT AND TUBING MANUFACTURED BY ONE OF THE FOLLOWING: ANAMET INCORPORATED, ANACONDA METAL HOSE; CANTEX INDUSTRIES, HARSCO CORPORATION; CONDUX INTERNATIONAL, ELECTRICAL PRODUCTS; HUBBELL INCORPORATED, RACO, INCORPORATED; THOMAS & BETTS CORPORATION, CARLON ELECTRICAL PRODUCTS; OR O-Z/GEDNEY, UNIT OF GENERAL SIGNAL.
7. PROVIDE CONDUIT BODIES AND FITTINGS MANUFACTURED BY ONE OF THE FOLLOWING: CROUSE-HINDS, DIVISION OF COOPER INDUSTRIES; EMERSON ELECTRIC COMPANY, APPLETOF ELECTRIC COMPANY; HUBBELL INCORPORATED, KILLARK ELECTRIC MANUFACTURING COMPAQ THOMAS & BETTS CORPORATION, CARLON ELECTRICAL PRODUCTS; OR O-Z/GEDNEY, UNIT 0* GENERAL SIGNAL.
8. PROVIDE METAL WIREWAYS MANUFACTURED BY ONE OF THE FOLLOWING: HOFFMAN ENGINEERING COMPANY; KEYSTONE/REES, INCORPORATED; OR SQUARE D COMPANY.
9. PROVIDE BOXES, ENCLOSURES, AND CABINETS MANUFACTURED BY ONE OF THE FOLLOWING CROUSE-HINDS, DIVISION OF COOPER INDUSTRIES; HOFFMAN ENGINEERING COMPANY, A FEDERAL-HOFFMAN INCORPORATED; HUBBELL INCORPORATED, RACO INCORPORATED;THOMASBETTS, CARLON ELECTRICAL PRODUCTS; O-Z/GEDNEY, UNIT OF GENERAL SIGNAL; ROBROY INDUSTRIES INCORPORATED, ELECTRICAL DIVISION; OR SCOTT FETZER COMPANY, ADALET-PLM.

ELECTRICAL SYMBOLS LIST

	CIRCUIT BREAKER
	TRANSFORMER
	GROUNDING ELECTRODE AND CONDUCTOR
	METER/MAIN SWITCHBOARD ON CONCRETE PAD
AC	UNDERGROUND AC CONDUIT
DC	UNDERGROUND DC CONDUIT
COMM	UNDERGROUND COMMUNICATIONS CONDUIT
○	REMOVABLE BOLLARD
●	PERMANENT BOLLARD

ABBREVIATIONS

A	AMPS
AFC	ABOVE FINISHED COUNTER
AHJ	AUTHORITY HAVING JURISDICTION
AFF	ABOVE FINISH FLOOR
C	CONDUIT
CBC	CALIFORNIA BUILDING CODE
CO	CONDUIT
CU	COPPER
EM	EMERGENCY
EVCS	ELECTRIC VEHICLE CHARGING STATION
(E)	EXISTING TO REMAIN
(R)	RELOCATED
(X)	EXISTING TO BE DEMOLISHED
FLA	FULL LOAD AMPS
G	GROUND
GFCI	GROUND FAULT CIRCUIT INTERRUPTER
MCB	MAIN CIRCUIT BREAKER
MLO	MAIN LUGS ONLY
NL	NIGHT LIGHT
OC	ON CENTER
PC	POWER CABINET
TYP	TYPICAL
UON	UNLESS OTHERWISE NOTED
V	VOLTS
VL	VERIFY LOCATION
WP	WEATHERPROOF

BUILDING AND SAFETY DIVISION
Department of Public Works
APPROVED
UNDER LOS ANGELES COUNTY CODE
TITLES 26, 30 AND 31
FMOKRI
PUBLIC WORKS
09/13/2023 3:43:55 PM
This set of plans and specifications must be kept at the job site at all times, and it is unlawful to make any changes, modifications or alterations to these plans or specifications without the prior written permission of the Building Official. The stamping of this set of plans and specifications SHALL NOT, under any circumstances, be deemed to permit or to be an approval of any work or activity that violates any provisions of any County Ordinance or State Law

DEVELOPER:
powerflex
EDF renewables
392 FIRST STREET
LOS ALTOS, CA 94022
P: 650.469.3392

ELECTRICAL ENGINEER:
nazarene engineering
NAZARENE ENGINEERING
2514 JAMACHA RD. #502-182
EL CAJON, CA 92019
619.333.6703
WWW.NAZENGINEERING.COM

ENGINEERS STAMP:
REGISTERED PROFESSIONAL ENGINEER
NO. 19677
Exp: 9/30/23
ELECTRICAL
STATE OF CALIFORNIA
DATE SIGNED: 06/02/23

PROJECT NUMBER:	2314-03
DRAWN BY:	RF
CHECKED BY:	JB

REVISIONS

REV	DATE	DESCRIPTION	BY
0	05/12/23	IFP PLAN PACKAGE	JB
1	06/02/23	PLAN CHECK #1	JB

SITE ADDRESS
MARINA DEL REY LOT 5

DEPARTMENT OF
REGIONAL PLANNING APPROVED

SHEET TITLE
ELECTRICAL NOTES & ABBREVIATIONS

SHEET NUMBER
E001

THE USE OF THESE PLANS AND SPECIFICATIONS SHALL BE RESTRICTED TO THE ORIGINAL SITE FOR WHICH THEY WERE PREPARED AND PUBLICATION THEREOF IS EXPRESSLY LIMITED TO SUCH USE. REPRODUCTION, PUBLICATION, OR RE-USE BY ANY METHOD, IN WHOLE OR IN PART WITHOUT THE EXPRESS CONSENT OF 'NAZARENE ENGINEERING' IS PROHIBITED.

A1 EQUIPMENT LAYOUT ENLARGED DETAIL

SCALE: 1" = 5'

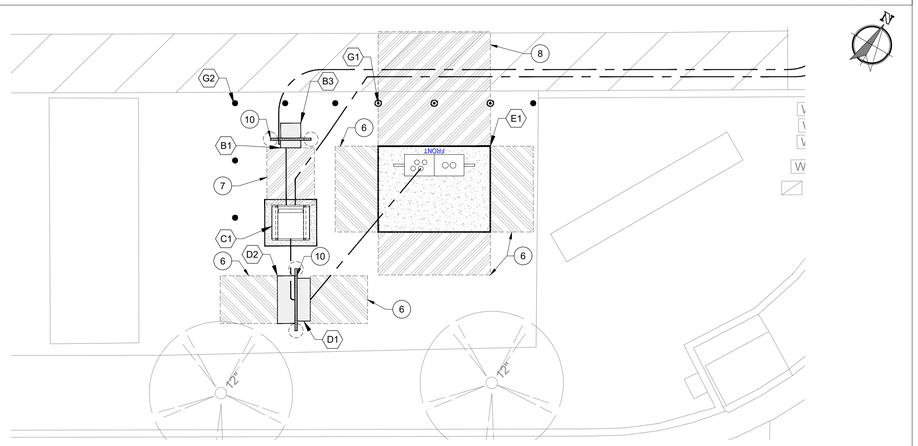

A2 ACCESSIBLE RAMP AT EV STALLS #1-6 ENLARGED DETAIL

SCALE: 1" = 5'

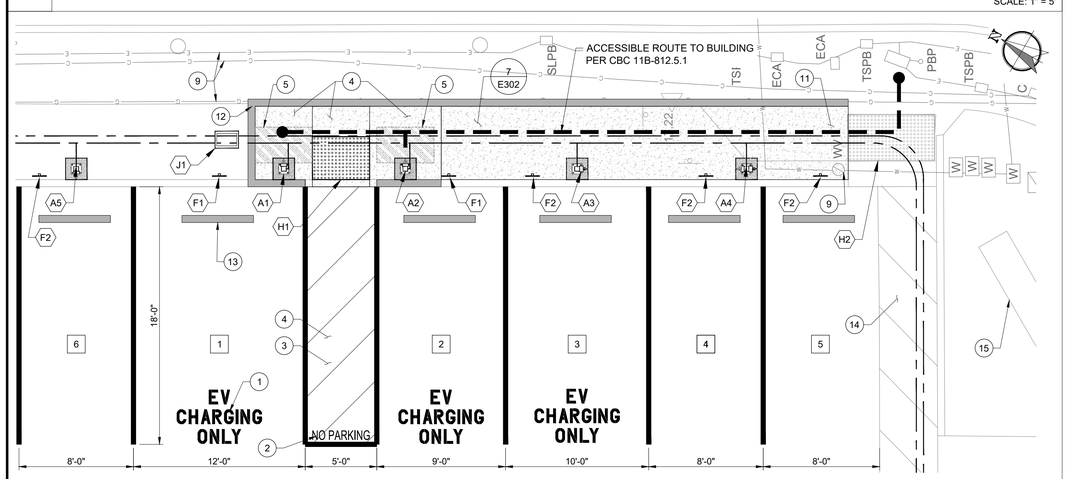

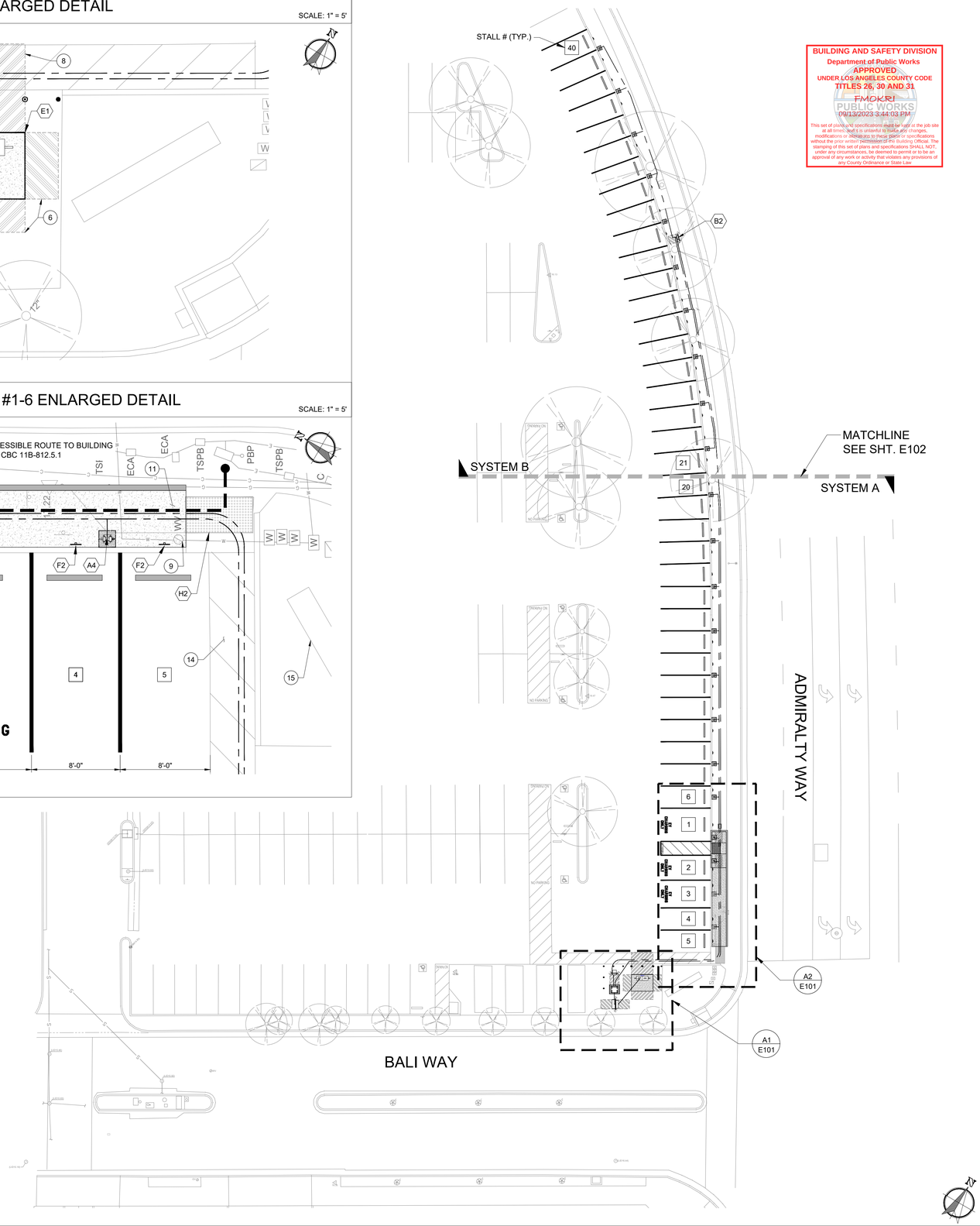

BUILDING AND SAFETY DIVISION
Department of Public Works
APPROVED
UNDER LOS ANGELES COUNTY CODE
TITLES 26, 30 AND 31
FMOKRI
PUBLIC WORKS
09/13/2023 3:44:03 PM
This set of plans and specifications must be kept at the job site at all times and it is unlawful to make any changes, modifications or additions to these plans or specifications without the prior written permission of the Building Official. The stamping of this set of plans and specifications SHALL NOT, under any circumstances, be deemed to permit or to be an approval of any work or activity that violates any provisions of any County Ordinance or State Law

AERIAL VIEW

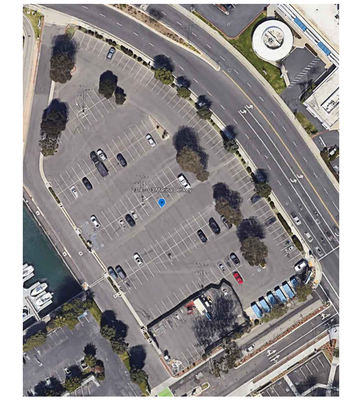

EQUIPMENT SUMMARY

- A1 — 7.7KW EV CHARGER VAN ACCESSIBLE STALL #1 SEE EQUIPMENT PAD DETAIL 1/E302 (SINGLE PEDESTAL)
- A2 — 7.7KW EV CHARGER STANDARD ACCESSIBLE STALL #2 SEE EQUIPMENT PAD DETAIL 1/E302 (SINGLE PEDESTAL)
- A3 — 7.7KW EV CHARGER AMBULATORY STALL #3 SEE EQUIPMENT PAD DETAIL 1/E302 (SINGLE PEDESTAL)
- A4 — 7.7KW EV CHARGER STANDARD NON ACCESSIBLE STALLS #4-5 & 7-40 SEE EQUIPMENT PAD DETAIL 1/E302 (DUAL PEDESTAL)
- A5 — 7.7KW EV CHARGER STANDARD NON ACCESSIBLE STALL #6 SEE EQUIPMENT PAD DETAIL 1/E302 (SINGLE PEDESTAL)
- B1 — SYSTEM A DISTRIBUTION BOARD 'EVA1' (STALLS #1-20) SEE EQUIPMENT PAD DETAIL 2/E302
- B2 — SYSTEM B DISTRIBUTION BOARD 'EVB1' (STALLS #21-40) SEE EQUIPMENT PAD DETAIL 2/E302
- B3 — LOAD MANAGEMENT CONTROLLER 'LMC' SEE EQUIPMENT PAD DETAIL 7/E302
- C1 — TRANSFORMER 'XEV1' SEE EQUIPMENT PAD DETAIL 3/E302
- D1 — MILBANK CT AND METER CABINET STRUT MOUNTED
- D2 — PANELBOARD 'MSB' STRUT MOUNTED
- E1 — UTILITY TRANSFORMER PAD PER SCE STANDARD (75-500KVA, 3ϕ, 72"X94" CONCRETE PAD)
- F1 — 'EV CHARGING ONLY' PARKING SIGN VAN AND STANDARD ACCESSIBLE STALLS #1-2 PER CBC 11B-812.8. SEE DETAIL 6/E301
- F2 — 'EV CHARGING' PARKING SIGN AMBULATORY & STANDARD NON-ACCESSIBLE STALLS #3-40 PER CBC 11B-812.8. SEE DETAIL 6/E301
- G1 — UTILITY TRANSFORMER BOLLARD PER UTILITY STANDARD
- G2 — PERMANENT BOLLARD (TYP.) SEE DETAIL 5/E302
- H1 — DETECTABLE WARNING SEE DETAIL 5/E301
- H2 — EXISTING DETECTABLE WARNING PROTECT IN PLACE
- J1 — 11"x17" PULLBOX

KEY NOTES

1. 12" HIGH "EV CHARGING ONLY" SURFACE MARKING AT THE END OF EACH EVCS SPACE PER CBC 11B-812.9.
2. "NO PARKING" WORDS ON THE SURFACE OF THE ACCESS AISLE TO BE 12" MIN. IN HEIGHT AND LOCATED TO BE VISIBLE FROM THE ADJACENT VEHICULAR WAY PER CBC 11B-812.7.3.
3. ACCESS AISLE SHALL BE PAINTED A COLOR OTHER THAN BLUE REQUIRED FOR IDENTIFICATION FOR REGULAR ACCESS AISLES PER CBC 11B-812.7.2.
4. SLOPE OF WALKING SURFACES TO BE 2% MAXIMUM IN EVERY DIRECTION AT THE VAN ACCESSIBLE AND STANDARD ACCESSIBLE STALLS, ACCESS AISLE AND IN FRONT OF THE EV CHARGING STATION PER CBC 11B-812.3.
5. 30"X48" EQUIPMENT CLEAR SPACE FOR PARALLEL APPROACH PER CBC 11B-305.
6. 36" LEVEL EQUIPMENT CLEARANCE PER NEC 110.26.
7. 48" LEVEL EQUIPMENT CLEARANCE PER NEC 11
8. 8' LEVEL EQUIPMENT CLEARANCE PER UTILITY
9. CONTRACTOR SHALL POTHOLE EXACT LOCATIO CONDUITS PRIOR TO INSTALLING EQUIPMENT AND RELOCATE EXISTING CONDUIT AS REQUIRED.
10. PROPOSED UNISTRUT EQUIPMENT RACK.
11. PROPOSED 4" THICK CONCRETE WALKWAY (5% MAX) SHALL CONNECT INTO EXISTING WALKWAY PER CBC AND AHJ REQUIREMENTS.
12. INSTALL VARIABLE HEIGHT CURB (6" MAX)
13. INSTALL WHEEL STOP (TYP.)
14. EXISTING ACCESS AISLE TO REMAIN. PROTECT IN PLACE.
15. EXISTING SIGN. PROTECT IN PLACE.

CONTACT 811 BEFORE YOU DIG — 811 — SAFE DIGGING PARTNER

DEVELOPER:

powerflex EDF renewables
392 FIRST STREET
LOS ALTOS, CA 94022
P: 650.469.3392

ELECTRICAL ENGINEER:

nazarene engineering
NAZARENE ENGINEERING
2514 JAMACHA RD. #502-182
EL CAJON, CA 92019
619.333.6703
WWW.NAZENGINEERING.COM

ENGINEERS STAMP:

REGISTERED PROFESSIONAL ENGINEER — NO. 19677 — Exp: 9/30/23 — ELECTRICAL — STATE OF CALIFORNIA

DATE SIGNED: 06/02/23

PROJECT NUMBER:	2314-03
DRAWN BY:	RF
CHECKED BY:	JB

REVISIONS

REV	DATE	DESCRIPTION	BY
0	05/12/23	IFP PLAN PACKAGE	JB
1	06/02/23	PLAN CHECK #1	JB

SITE ADDRESS

MARINA DEL REY LOT 5

DEPARTMENT OF REGIONAL PLANNING APPROVED

SHEET TITLE

OVERALL ELECTRICAL SITE PLAN

SHEET NUMBER

E101

A — OVERALL ELECTRICAL SITE PLAN

SCALE: 1" = 20'

THE USE OF THESE PLANS AND SPECIFICATIONS SHALL BE RESTRICTED TO THE ORIGINAL SITE FOR WHICH THEY WERE PREPARED AND PUBLICATION THEREOF IS EXPRESSLY LIMITED TO SUCH USE. REPRODUCTION, PUBLICATION, OR RE-USE BY ANY METHOD, IN WHOLE OR IN PART WITHOUT THE EXPRESS CONSENT OF 'NAZARENE ENGINEERING' IS PROHIBITED.

B1 TYPICAL EV CHARGER DETAIL DUAL PEDESTAL STALLS #7-40

SCALE: 1/8" = 1'-0"

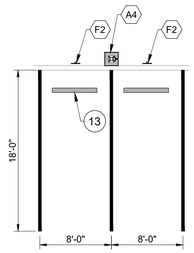

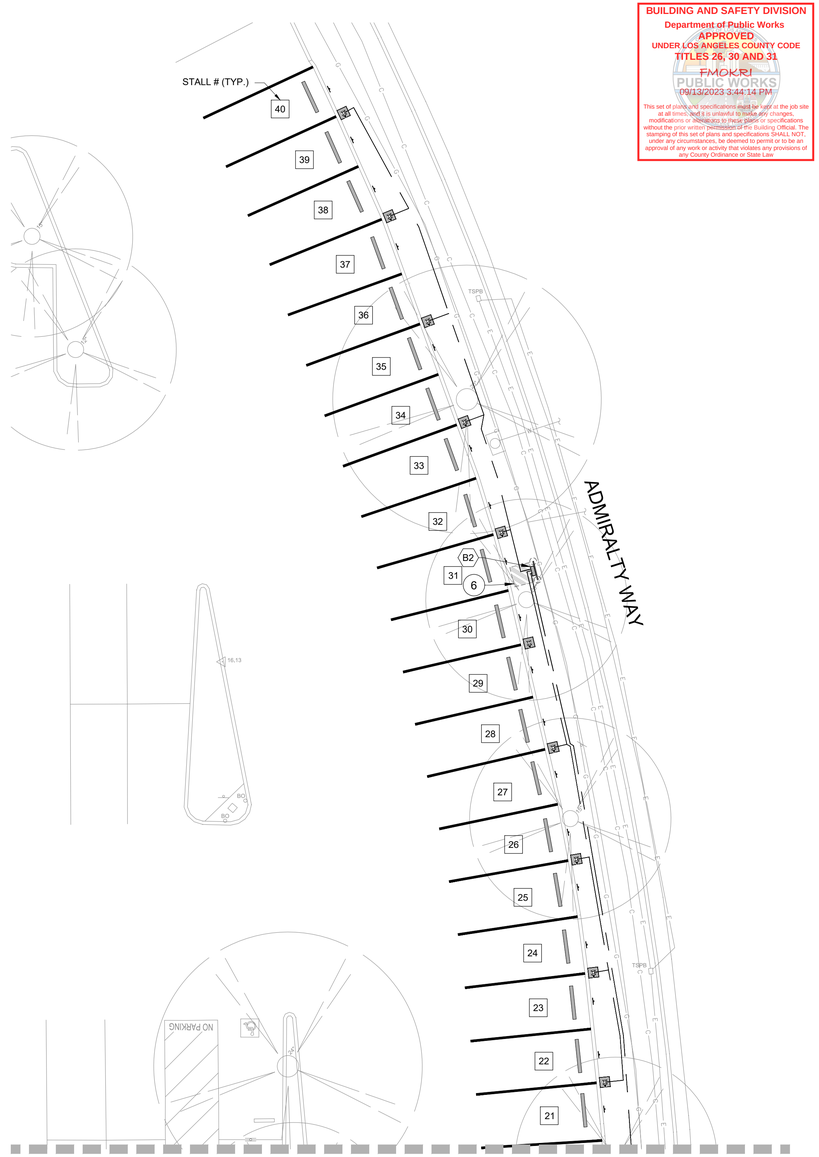

SYSTEM B - MATCHLINE

BUILDING AND SAFETY DIVISION
Department of Public Works
APPROVED
UNDER LOS ANGELES COUNTY CODE
TITLES 26, 30 AND 31
FMOKRI
PUBLIC WORKS
09/13/2023 3:44:14 PM
This set of plans and specifications must be kept at the job site at all times and it is unlawful to make any changes, modifications or additions to these plans or specifications without the prior written permission of the Building Official. The stamping of this set of plans and specifications SHALL NOT, under any circumstances, be deemed to permit or to be an approval of any work or activity that violates any provisions of any County Ordinance or State Law.

SYSTEM A - MATCHLINE

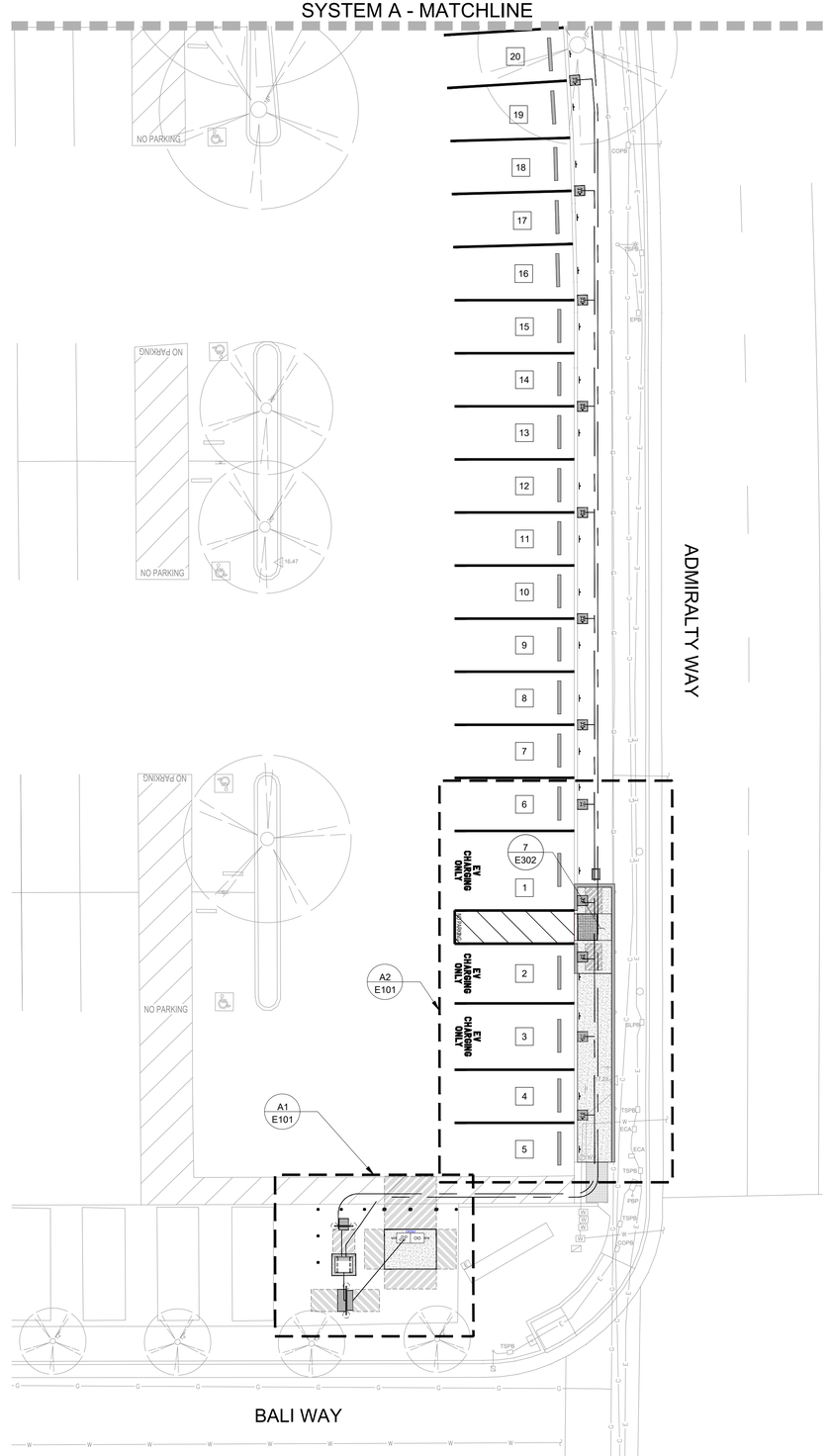

EQUIPMENT SCHEDULE

A1	7.7KW EV CHARGER VAN ACCESSIBLE STALL #1 SEE EQUIPMENT PAD DETAIL 1/E302 (SINGLE PEDESTAL)
A2	7.7KW EV CHARGER STANDARD ACCESSIBLE STALL #2 SEE EQUIPMENT PAD DETAIL 1/E302 (SINGLE PEDESTAL)
A3	7.7KW EV CHARGER AMBULATORY STALL #3 SEE EQUIPMENT PAD DETAIL 1/E302 (SINGLE PEDESTAL)
A4	7.7KW EV CHARGER STANDARD NON ACCESSIBLE STALLS #4-5 & 7-40 SEE EQUIPMENT PAD DETAIL 1/E302 (DUAL PEDESTAL)
A5	7.7KW EV CHARGER STANDARD NON ACCESSIBLE STALL #6 SEE EQUIPMENT PAD DETAIL 1/E302 (SINGLE PEDESTAL)
B1	SYSTEM A DISTRIBUTION BOARD 'EVA1' (STALLS #1-20) SEE EQUIPMENT PAD DETAIL 2/E302
B2	SYSTEM B DISTRIBUTION BOARD 'EVB1' (STALLS #21-40) SEE EQUIPMENT PAD DETAIL 2/E302
B3	LOAD MANAGEMENT CONTROLLER 'LMC' SEE EQUIPMENT PAD DETAIL 7/E302
C1	TRANSFORMER 'XEV1' SEE EQUIPMENT PAD DETAIL 3/E302
D1	MILBANK CT AND METER CABINET STRUT MOUNTED
D2	PANELBOARD 'MSB' STRUT MOUNTED
E1	UTILITY TRANSFORMER PAD PER SCE STANDARD (75-500KVA, 3ϕ, 72"X94" CONCRETE PAD)
F1	'EV CHARGING ONLY' PARKING SIGN VAN AND STANDARD ACCESSIBLE STALLS #1-2 PER CBC 11B-812.8. SEE DETAIL 6/E301
F2	'EV CHARGING' PARKING SIGN AMBULATORY & STANDARD NON-ACCESSIBLE STALLS #3-40 PER CBC 11B-812.8. SEE DETAIL 6/E301
G1	UTILITY TRANSFORMER BOLLARD PER UTILITY STANDARD
G2	PERMANENT BOLLARD (TYP.) SEE DETAIL 5/E302
H1	DETECTABLE WARNING SEE DETAIL 5/E301
H2	EXISTING DETECTABLE WARNING PROTECT IN PLACE
J1	11"x17" PULLBOX

KEY NOTES

1. 12" HIGH "EV CHARGING ONLY" SURFACE MARKING AT THE END OF EACH EVCS SPACE PER CBC 11B-812.9.
2. "NO PARKING" WORDS ON THE SURFACE OF THE ACCESS AISLE TO BE 12" MIN. IN HEIGHT AND LOCATED TO BE VISIBLE FROM THE ADJACENT VEHICULAR WAY PER CBC 11B-812.7.3.
3. ACCESS AISLE SHALL BE PAINTED A COLOR OTHER THAN BLUE REQUIRED FOR IDENTIFICATION FOR REGULAR ACCESS AISLES PER CBC 11B-812.7.2.
4. SLOPE OF WALKING SURFACES TO BE 2% MAXIMUM IN EVERY DIRECTION AT THE VAN ACCESSIBLE AND STANDARD ACCESSIBLE STALLS, ACCESS AISLE AND IN FRONT OF THE EV CHARGING STATION PER CBC 11B-812.3.
5. 30"X48" EQUIPMENT CLEAR SPACE FOR PARALLEL APPROACH PER CBC 11B-305.
6. 36" LEVEL EQUIPMENT CLEARANCE PER NEC 110.26.
7. 48" LEVEL EQUIPMENT CLEARANCE PER NEC 110.26.
8. 8' LEVEL EQUIPMENT CLEARANCE PER UTILITY STANDARDS.
9. CONTRACTOR SHALL POTHOLE EXACT LOCATION OF UNDERGROUND CONDUITS PRIOR TO INSTALLING EQUIPMENT AND RELOCATE EXISTING CONDUIT AS REQUIRED.
10. PROPOSED UNISTRUT EQUIPMENT RACK.
11. PROPOSED 4" THICK CONCRETE WALKWAY (5% MAX) SHALL CONNECT INTO EXISTING WALKWAY PER CBC AND AHJ REQUIREMENTS.
12. INSTALL VARIABLE HEIGHT CURB (6" MAX)
13. INSTALL WHEEL STOP (TYP.)
14. EXISTING ACCESS AISLE TO REMAIN. PROTECT IN PLACE.
15. EXISTING SIGN. PROTECT IN PLACE.

GENERAL NOTES

1. PROVIDE CLEARANCE IN FRONT OF ALL ELECTRICAL EQUIPMENT PER NEC 110.26, NEC 110.34 AND MANUFACTURER REQUIREMENTS.
2. PROVIDE REMOVABLE BOLLARDS AS REQUIRED TO MEET CLEARANCE REQUIREMENTS.
3. CONTRACTOR SHALL TRIM ANY VEGETATION THAT MAY CONFLICT WITH CONSTRUCTION OF EV FACILITY.
4. GRASS AND UNDERLYING TOPSOIL TO BE REMOVED AT EQUIPMENT PAD AND TRANSFORMER PAD AREAS.
5. CONTRACTOR SHALL EXERCISE EXTREME CAUTION IN EXCAVATING AND TRENCHING ON THIS SITE TO AVOID EXISTING DUCTS, PIPING OR CONDUITS, ETC., AND TO PREVENT HAZARDS TO PERSONNEL AND/OR DAMAGE TO EXISTING UNDERGROUND UTILITIES OR STRUCTURES WHETHER OR NOT SHOWN AND INSTALLED BY ANY OTHER CONTRACTS. THE ENGINEER IS NOT RESPONSIBLE FOR THE L UNDERGROUND UTILITIES OR STRUCTURES WH DETAILED AND INSTALLED BY ANY OTHER CONT SHALL IMMEDIATELY NOTIFY THE ENGINEER SH CONDITIONS BE DISCOVERED. THESE DRAWING NOT INCLUDE THE NECESSARY ELEMENTS FOR
6. CALL UNDERGROUND SERVICE ALERT (USA) AT 1 (800) 422-4133 OR APPLICABLE STATE AND LOCAL DIG SAFE OR UNDERGROUND ALERT HOTLINES PRIOR TO CONSTRUCTION START.
7. SEE SINGLE LINE DIAGRAM FOR CONDUIT SIZE AND QUANTITIES.
8. HAND DIG ALL UTILITIES IN CLOSE PROXIMITY TO THE INSTALLATION OF THE ELECTRICAL EQUIPMENT TO AVOID DAMAGING ANY UTILITY LINE.
9. THE METHODS CONTAINED IN CEC/NEC ARTICLE 250 SHALL BE FOLLOWED TO COMPLY WITH GROUNDING AND BONDING OF ELECTRICAL SYSTEMS AND NON-CURRENT CARRYING CONDUCTIVE MATERIALS, ENCLOSURES OR ITEMS FORMING PART OF ANY SUCH EQUIPMENT THAT ENCLOSES OR CARRIES ELECTRICAL CONDUCTOR OR EQUIPMENT THAT IS LIKELY TO BECOME ENERGIZED. SEE CEC/NEC 250.4(A)(1) THROUGH (5) FOR FURTHER DESCRIPTION.
10. WHERE TWO OR MORE GROUND RODS ARE TO BE INSTALLED, THE MINIMUM SEPARATION SHALL BE 6' PER CEC/NEC 250.53 (A)(2) AND (3) RESISTANCE OF ELECTRODES.
11. MINIMUM CONDUIT BURIAL DEPTH SHALL BE 24".
12. ACCESS AND WORKING SPACE SHALL BE PROVIDED AND MAINTAINED ABOUT ALL ELECTRICAL EQUIPMENT TO PERMIT READY AND SAFE OPERATION AND MAINTENANCE OF SUCH EQUIPMENT PER CEC/NEC 110.26.
13. CONDUIT BODIES, JUNCTION BOXES AND PULLBOXES SHALL BE USED AS NEEDED TO MAINTAIN LESS THAN 360° OF CONDUIT BENDS BETWEEN PULL POINTS.

DEPARTMENT OF
REGIONAL PLANNING APPROVED

DEVELOPER:
powerflex EDF renewables
392 FIRST STREET
LOS ALTOS, CA 94022
P: 650.469.3392

ELECTRICAL ENGINEER:
nazarene engineering
NAZARENE ENGINEERING
2514 JAMACHA RD. #502-182
EL CAJON, CA 92019
619.333.6703
WWW.NAZENGINEERING.COM

ENGINEERS STAMP:

REGISTERED PROFESSIONAL ENGINEER
NO. 19677
Exp: 9/30/23
ELECTRICAL
STATE OF CALIFORNIA

DATE SIGNED: 06/02/23

PROJECT NUMBER:	2314-03
DRAWN BY:	RF
CHECKED BY:	JB

REVISIONS

REV	DATE	DESCRIPTION	BY
0	05/12/23	IFP PLAN PACKAGE	JB
1	06/02/23	PLAN CHECK #1	JB

SITE ADDRESS

MARINA DEL REY LOT 5

SHEET TITLE

ELECTRICAL LAYOUT PLAN

SHEET NUMBER

E102

B ELECTRICAL LAYOUT PLAN

SCALE: 3/32" = 1'-0"

THE USE OF THESE PLANS AND SPECIFICATIONS SHALL BE RESTRICTED TO THE ORIGINAL SITE FOR WHICH THEY WERE PREPARED AND PUBLICATION THEREOF IS EXPRESSLY LIMITED TO SUCH USE. REPRODUCTION, PUBLICATION, OR RE-USE BY ANY METHOD, IN WHOLE OR IN PART WITHOUT THE EXPRESS CONSENT OF 'NAZARENE ENGINEERING' IS PROHIBITED.

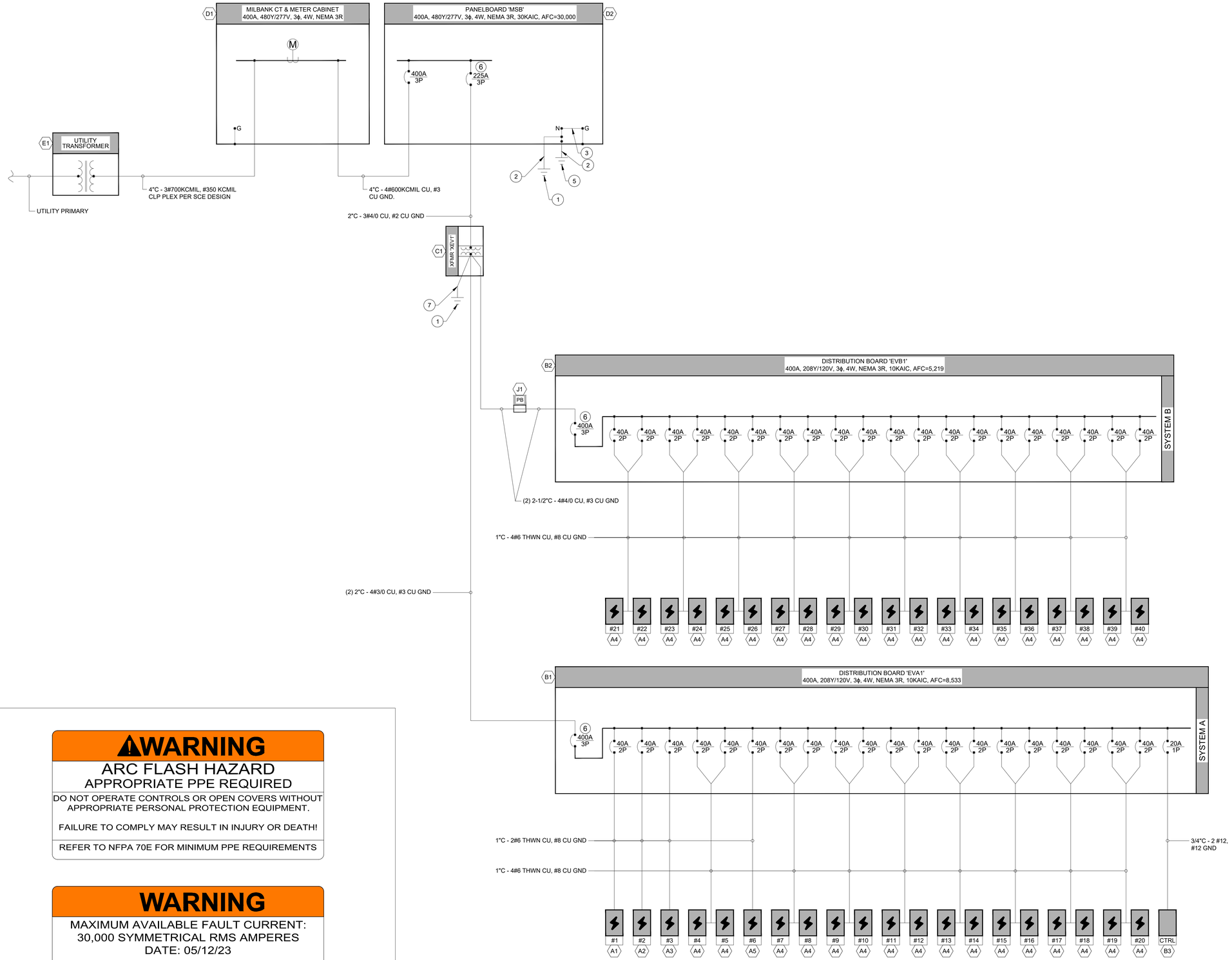

EQUIPMENT SCHEDULE

A1	7.7KW EV CHARGER VAN ACCESSIBLE STALL #1 WEBASTO MODEL# TURBODX 32A (SINGLE PEDESTAL)
A2	7.7KW EV CHARGER STANDARD ACCESSIBLE STALL #2 WEBASTO MODEL# TURBODX 32A (SINGLE PEDESTAL)
A3	7.7KW EV CHARGER AMBULATORY STALL #3 WEBASTO MODEL# TURBODX 32A (SINGLE PEDESTAL)
A4	7.7KW EV CHARGER STANDARD STALLS #4-5 & 7-40 WEBASTO MODEL# TURBODX 32A (DUAL PEDESTAL)
A5	7.7KW EV CHARGER STANDARD STALL #6 WEBASTO MODEL# TURBODX 32A (SINGLE PEDESTAL)
B1	SYSTEM A DISTRIBUTION BOARD 'EVA1' (STALLS #1-20) 400A, 208Y/120V, 3ϕ, 4W, NEMA 3R, 10KAIC
B2	SYSTEM B DISTRIBUTION BOARD 'EVB1' (STALLS #21-40) 400A, 208Y/120V, 3ϕ, 4W, NEMA 3R, 10KAIC
B3	LOAD MANAGEMENT CONTROLLER 'LMC' NEXUS CORE ENCLOSURE
C1	TRANSFORMER 'XEV1' HAMMOND POWER SOLUTIONS MODEL #DH4-N3R 150KVA, 3ϕ, NEMA 3R
D1	MILBANK CT AND METER CABINET 400A, 480Y/277V, 3ϕ, 4W, NEMA 3R
D2	PANELBOARD 'MSB' 400A, 480Y/277V, 3ϕ, 4W, NEMA 3R, 30KAIC
E1	UTILITY TRANSFORMER PAD PER SCE STANDARD (75-500KVA, 3ϕ, 72"X94" CONCRETE PAD)
J1	11"x17" PULLBOX

KEY NOTES

1. GROUNDING ELECTRODE 5/8"X8'-0" COPPER CLAD GROUND ROD. INSTALLATION PER NEC 250.52 (A)(5) AND 250.68. THERE SHALL BE TWO GROUND RODS SEPARATED BY SIX OR MORE FEET OR PROVIDE A CERTIFIED TEST SHOWING THAT THE RESISTANCE TO GROUND IS 25 OHMS OR LESS.
2. #1/0 AWG BARE CU GROUNDING ELECTRODE CONDUCTOR PER CEC 250.66(B).
3. #1/0 AWG BARE CU MAIN BONDING JUMPER PER CEC 250.24(A)(4), 250.28(C), 250.8(A)(7), 250.102(C)(1).
4. NOT USED.
5. CONCRETE ENCASED ELECTRODE PER CEC 250.52(A)(3)(1) OR (2).
6. DISCONNECTING MEANS SHALL BE LOCKABLE PER NEC 625.42.
7. #2 AWG BARE CU GROUNDING ELECTRODE CONDUCTOR PER CEC 250.66(B).

GENERAL NOTES

1. ALL CONDUIT AND WIRING BY CONTRACTOR UNLESS NOTED OTHERWISE.
2. ALL CONDUCTORS ARE COPPER (CU) UNLESS NOTED OTHERWISE.
3. PROVIDE 12" MIN. SEPARATION BETWEEN COMMUNICATION & POWER CONDUITS IN UNDERGROUND TRENCH INSTALLATION.
4. PROVIDE FULLY RATED BREAKERS THROUGHOUT.
5. REFER TO UTILITY DESIGN DOCUMENT FOR DETAILS ON UTILITY TRANSFORMER AND CONDUIT REQUIREMENTS.
6. MAIN SHALL BE 100% RATED.

LOAD LIMITIN

LOAD LIMITING FUNCTION OF ALL CHARGERS SHALL BE CONFIGURED AS NEEDED SUCH THAT THE TOTAL LOAD DRAWN BY THE PROPOSED CHARGERS DOES NOT EXCEED THE MAIN BREAKER RATING FOR EACH PANEL OR UTILITY TRANSFORMER CAPACITY.

COUNTY OF LOS ANGELES NOTES

1. ALL ELECTRICAL EQUIPMENT SHALL BE LABELED, LISTED OR CERTIFIED BY A NATIONALLY RECOGNIZED TESTING LABORATORY ACCREDITED BY THE UNITED STATES OCCUPATIONAL SAFETY ADMINISTRATION.
2. EQUIPMENT GROUND CONDUCTORS SMALLER THAN 6 AWG SHALL BE PROTECTED FROM PHYSICAL DAMAGE BY AN IDENTIFIED RACEWAY OR CABLE ARMOR UNLESS INSTALLED WITH HOLLOW SPACES OF THE FRAMING MEMBERS OF BUILDINGS OR STRUCTURES AND WHERE NOT SUBJECT TO PHYSICAL DAMAGE, ART. 250.1(C), ART. 690.46.

⚠WARNING

ARC FLASH HAZARD
APPROPRIATE PPE REQUIRED

DO NOT OPERATE CONTROLS OR OPEN COVERS WITHOUT APPROPRIATE PERSONAL PROTECTION EQUIPMENT.

FAILURE TO COMPLY MAY RESULT IN INJURY OR DEATH!

REFER TO NFPA 70E FOR MINIMUM PPE REQUIREMENTS

WARNING

MAXIMUM AVAILABLE FAULT CURRENT:
30,000 SYMMETRICAL RMS AMPERES
DATE: 05/12/23

WARNING LABELS AT PANELBOARD 'MSB'

ELECTRICAL SINGLE LINE DIAGRAM

DEVELOPER:

powerflex EDF renewables
392 FIRST STREET
LOS ALTOS, CA 94022
P: 650.469.3392

ELECTRICAL ENGINEER:

nazarene engineering
NAZARENE ENGINEERING
2514 JAMACHA RD. #502-182
EL CAJON, CA 92019
619.333.6703
WWW.NAZENGINEERING.COM

ENGINEERS STAMP:

REGISTERED PROFESSIONAL ENGINEER
NO. 19677
Exp: 9/30/23
ELECTRICAL
STATE OF CALIFORNIA

DATE SIGNED: 06/02/23

PROJECT NUMBER:	2314-03
DRAWN BY:	RF
CHECKED BY:	JB

REVISIONS

REV	DATE	DESCRIPTION	BY
0	05/12/23	IFP PLAN PACKAGE	JB
1	06/02/23	PLAN CHECK #1	JB

SITE ADDRESS

MARINA DEL REY LOT 5

DEPARTMENT OF REGIONAL PLANNING APPROVED

SHEET TITLE

ELECTRICAL SINGLE LINE DIAGRAM

SHEET NUMBER

E201

THE USE OF THESE PLANS AND SPECIFICATIONS SHALL BE RESTRICTED TO THE ORIGINAL SITE FOR WHICH THEY WERE PREPARED AND PUBLICATION THEREOF IS EXPRESSLY LIMITED TO SUCH USE. REPRODUCTION, PUBLICATION, OR RE-USE BY ANY METHOD, IN WHOLE OR IN PART WITHOUT THE EXPRESS CONSENT OF 'NAZARENE ENGINEERING' IS PROHIBITED.

LOAD CALCULATIONS

LOAD CALCULATION - MSB

208Y/120V, 800A, 3PH, 4W

	LOAD (VA) Ø A	Ø B	Ø C
PANEL EV1	43,264	46,592	43,264
PANEL EV2	43,264	46,592	43,264
Total Connected Load (VA):	86,528	93,184	86,528
Total Code Load (Amps):	**313**	**337**	**313**

VOLTAGE DROP CALCULATIONS

VOLTAGE DROP CALCULATIONS

FROM	TO	I (A)	V_{NOM}	AC/DC	Ø	WIRE MATERIAL	AWG	# IN PARALLEL	WIRE MAX TEMP (°C)	Ω/kft	1-WAY DIST (FT)	V.D.
'CT & METER'	'MSB'	400	480	AC	3	CU	600	1	87-95	0.019419	5	0.01%
'MSB'	XFMR 'XEV1'	400	480	AC	3	CU	4/0	1	87-95	0.054512	10	0.08%
XFMR 'XEV1'	'EVA1'	400	208	AC	3	CU	3/0	2	87-95	0.069403	10	0.12%
XFMR 'XEV1'	'EVB1'	400	208	AC	3	CU	4/0	2	87-95	0.054512	310	2.81%
'EVA1'	EV CHARGER #19-20	32	208	AC	3	CU	6	1	87-95	0.444108	215	2.54%
'EVB1'	EV CHARGER #39-40	32	208	AC	3	CU	6	1	87-95	0.444108	85	1.01%

SHORT CIRCUIT CALCULATIONS

3Ø SHORT CIRCUIT CALCULATIONS

(FEEDER LENGTHS SHOWN IN THIS CALCULATION SHALL NOT BE USED FOR BID PURPOSES OF DETERMINING ACTUAL FEEDER LENGTHS)
THE FOLLOWING CALCULATIONS ARE BASED ON POINT TO POINT METHOD

$f_{CONDUCTOR} = [\sqrt{3} \times L_{ft} \times I_{SC}] \div [C \times N \times V_{L-L}]$

$M = 1 \div [1 + f]$

$I_{SC} = I_{SC} \times M$

FAULT LOCATION	FED FROM	KVA_{XFMR}	$E_{(volts)}$	%Z	FEEDER	CONDUIT TYPE	FEEDER SIZE	# OF PARALLEL RUNS (N)	INSULATION VOLTAGE	$L_{(ft)}$	C	f	M	I_{SC}	MOTOR CONT. (AMPS)	$I_{SC,}$ TOTAL	EQUIPMENT MIN. KAIC
															UTILITY FAULT CONTRIBUTION IS TAKEN FROM SCE ELECTRIC SERVICE REQUIREMENTS		
CT & METER CABINET	UTILITY		480											30,000		30,000	30
MSB	CT & METER CABINET		480		CU	M	600	1	600	5	22965	0.024	0.977	29,309		29,309	30
XFMR 'XEV1'-PRI	MSB		480		CU	NM	4/0	1	600	10	16673	0.063	0.940	27,561		27,561	30
XFMR 'XEV1'-SEC	XFMR 'XEV1'-PRI	150	208	1.20								1.833	0.353	22,450		22,450	
PANEL 'EVA1'	XFMR 'XEV1'-SEC		208		CU	NM	3/0	2	600	10	13923	0.067	0.937	21,037		21,037	25
PANEL 'EVB1'	XFMR 'XEV1'-SEC		208		CU	NM	4/0	2	600	310	16673	1.738	0.365	8,200		8,200	10

'EVA1' DISTRIBUTION PANEL SCHEDULE

Panel: EVA1 | **Mains:** 400A | **Voltage:** 208Y/120V, 3ø, 4W, 400A
Mounting: SURFACE | **Type:** BOLT-ON | **Min. A.I.C.:** SERIES RATED

Use and/or Area Served	C/B	Cir. No.	Load Ø A	Ø B	Ø C	Cir. No.	C/B	Use and/or Area Served
EV-1		1	3328				40	EV-11
			3328			2		
--		3		3328				--
				3328		4	2	
EV-2		5			3328		40	EV-12
					3328	6		
--		7	3328					--
			3328			8	2	
EV-3		9		3328			40	EV-13
				3328		10		
--		11			3328			--
					3328	12	2	
EV-4		13	3328				40	EV-14
			3328			14		
--		15		3328				--
				3328		16	2	
EV-5		17			3328		40	EV-15
					3328	18		
--		19	3328					--
			3328			20	2	
EV-6		21		3328			40	EV-16
				3328		22		
--		23			3328			--
					3328	24	2	
EV-7		25	3328				40	EV-17
			3328			26		
--		27		3328				--
				3328		28	2	
EV-8		29			3328		40	EV-18
					3328	30		
--		31	3328					--
			3328			32	2	
EV-9		33		3328			40	EV-19
				3328		34		
--		35			3328			--
					3328	36	2	
SPACE		37					40	EV-20
			3328			38		
EV-10		39		3328				--
				3328		40	2	
--		41			3328		20	POWER MANAGEMENT CONTROLLER
						42	1	
Total Connected Load (VA):			43264	46592	43264	NOTES:		
Total Code Load (VA):			**43264**	**46592**	**43264**			
Total Code Load (Amps):			**361**	**389**	**361**			

'EVB1' DISTRIBUTION PANEL SCHEDULE

Panel: EVB1 | **Mains:** 400A | **Voltage:** 208Y/120V, 3ø, 4W, 400A
Mounting: SURFACE | **Type:** BOLT-ON | **Min. A.I.C.:** SERIES RATED

Use and/or Area Served	C/B	Cir. No.	Load Ø A	Ø B	Ø C	Cir. No.	C/B	Use and/or Area Served
EV-21		1	3328				40	EV-31
			3328			2		
--		3		3328				--
				3328		4	2	
EV-22		5			3328		40	EV-32
					3328	6		
--		7	3328					--
			3328			8	2	
EV-23		9		3328			40	EV-33
				3328		10		
--		11			3328			--
					3328	12	2	
EV-24		13	3328				40	EV-34
			3328			14		
--		15		3328				--
				3328		16	2	
EV-25		17			3328		40	EV-35
					3328	18		
--		19	3328					--
			3328			20	2	
EV-26		21		3328			40	EV-36
				3328		22		
--		23			3328			--
					3328	24	2	
EV-27		25	3328				40	EV-37
			3328			26		
--		27		3328				--
				3328		28	2	
EV-28		29			3328		40	EV-38
					3328	30		
--		31	3328					--
			3328			32	2	
EV-29		33		3328			40	EV-39
				3328		34		
--		35			3328			--
					3328	36	2	
SPACE		37					40	EV-40
			3328			38		
EV-30		39		3328				--
				3328		40	2	
--		41			3328		--	SPACE
						42		
Total Connected Load (VA):			43264	46592	43264	NOTES:		
Total Code Load (VA):			**43264**	**46592**	**43264**			
Total Code Load (Amps):			**361**	**389**	**361**			

DEPARTMENT OF REGIONAL PLANNING APPROVED

DEVELOPER:

powerflex EDF renewables
392 FIRST STREET
LOS ALTOS, CA 94022
P: 650.469.3392

ELECTRICAL ENGINEER:

nazarene engineering
NAZARENE ENGINEERING
2514 JAMACHA RD. #502-182
EL CAJON, CA 92019
619.333.6703
WWW.NAZENGINEERING.COM

ENGINEERS STAMP:

REGISTERED PROFESSIONAL ENGINEER
NO. 19677
Exp: 9/30/23
ELECTRICAL
STATE OF CALIFORNIA

DATE SIGNED: 06/02/23

PROJECT NUMBER:	2314-03
DRAWN BY:	RF
CHECKED BY:	JB

REVISIONS

REV	DATE	DESCRIPTION	BY
0	05/12/23	IFP PLAN PACKAGE	JB
1	06/02/23	PLAN CHECK #1	JB

SITE ADDRESS

MARINA DEL REY LOT 5

SHEET TITLE

CALCULATIONS AND PANEL SCHEDULES

SHEET NUMBER

E202

THE USE OF THESE PLANS AND SPECIFICATIONS SHALL BE RESTRICTED TO THE ORIGINAL SITE FOR WHICH THEY WERE PREPARED AND PUBLICATION THEREOF IS EXPRESSLY LIMITED TO SUCH USE. REPRODUCTION, PUBLICATION, OR RE-USE BY ANY METHOD, IN WHOLE OR IN PART WITHOUT THE EXPRESS CONSENT OF 'NAZARENE ENGINEERING' IS PROHIBITED.

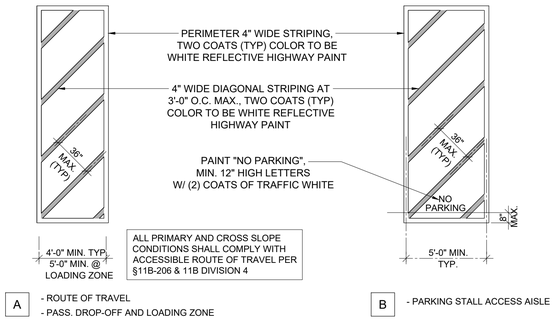

NOTES:
1. PER CBC 11B-502.5 VERTICAL CLEARANCE. PARKING SPACES, ACCESS AISLES AND VEHICULAR ROUTES SERVING THEM SHALL PROVIDE A VERTICAL CLEARANCE OF 98 INCHES MINIMUM.
2. ACCESSIBLE PATH AND ACCESS AISLE SHALL COMPLY WITH §11B-206, 11B DIVISION 4, AND 11B-502.3

7 ACCESSIBLE PATH AND AND PARKING STALL AISLE STRIPING DETAIL

NOT TO SCALE

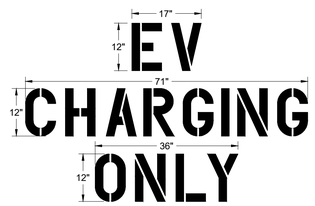

NOTES:
1. PROVIDE 4.5" SPACING BETWEEN STENCILS.
2. LOCATION: CENTER AT FOOT OF PARKING STALL.
3. FONT: STANDARD GOTHIC.
4. COLOR: WHITE ON EXISTING SURFACE (NO FILL INSIDE STENCIL)

4 ELECTRIC VEHICLE ONLY SURFACE STENCIL DETAIL

NOT TO SCALE

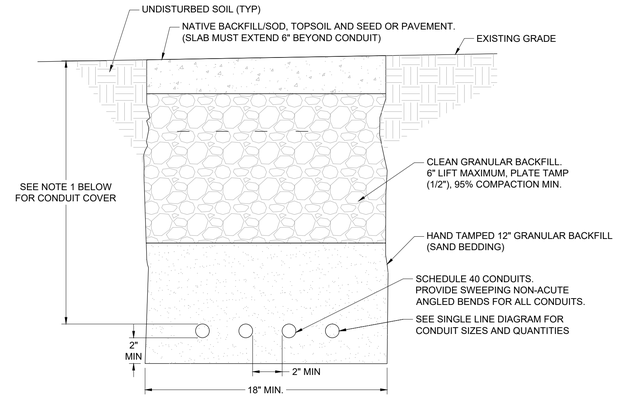

NOTES:
1. 24" MIN. CONDUIT COVER UNDER STREETS, HIGHWAYS, ROADS, ALLEYS, DRIVEWAYS AND PARKING LOTS & 18" MIN. CONDUIT COVER ELSEWHERE PER NEC TABLE 300.5.
2. ANY EXCAVATION LEFT OPEN SHOULD BE SECURELY FENCED OFF.
3. ANY PAVEMENT DAMAGE DURING CONSTRUCTION SHALL BE REPAIRED OR REPLACED BY THE CONTRACTOR TO PRE-CONSTRUCTION CONDITIONS OR BETTER.
4. CONTRACTOR SHALL VERIFY WIDTH OF TRENCH PRIOR TO ANY WORK COMMENCING.
5. REFER TO ELECTRICAL SITE PLAN FOR CONDUIT ROUTING.

1 TRENCH DETAIL

NOT TO SCALE

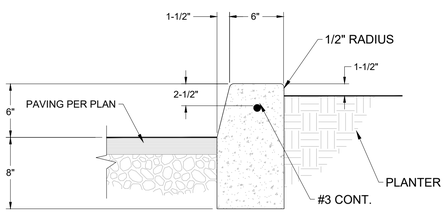

8 6" CURB DETAIL

NOT TO SCALE

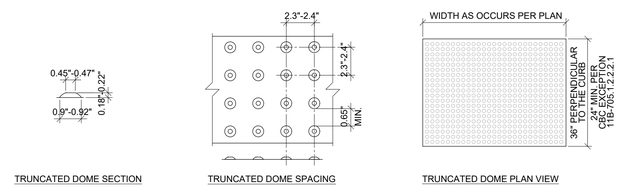

NOTES:
1. DETECTABLE WARNINGS SHALL COMPLY CBC §11B-247 & 11B-705.
2. REFER TO TITLE 24 ADA REQUIREMENTS NOTES SHEET 1 FOR ADDITIONAL INFORMATION.
3. DETECTABLE WARNINGS AT CURB RAMPS SHALL SHALL BE LOCATED SO THAT THE NEAREST EDGE OF THE CURB IS 6" MIN. AND 8" MAXIMUM FROM THE LINE AT THE FACE OF THE CURB MARKING THE TRANSITION BETWEEN THE CURB AND THE GUTTER, STREET, OR HIGHWAY. (EXCEPT AT PARALLEL CURB RAMPS).
4. COLOR: DETECTABLE WARNING SURFACES SHALL BE YELLOW PER FS 33538, FEDERAL STANDARD 595C. EXCEPT THAT DETECTABLE SURFACES AT CURB RAMPS, ISLANDS, AND CUT-THROUGH MEDIANS DO NOT NEED TO COMPLY.
5. DETECTABLE WARNING SURFACE SHALL CONTRAST WITH THE ADJACENT WALKING SURFACE

5 TRUNCATED DOME DETECTABLE WARNING DETAIL

NOT TO SCALE

MINIMUM CONDUIT SWEEPS	
CONDUIT SIZE	SWEEP
1"	6" SWEEP
2"	12" SWEEP
3"	18" SWEEP
4"	24" SWEEP

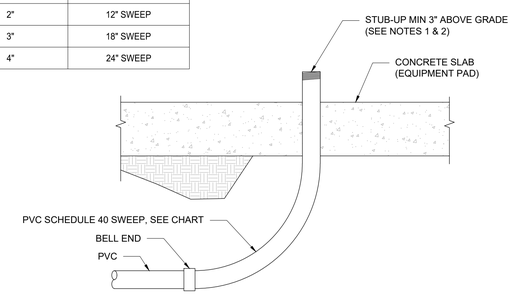

NOTES:
1. INITIALLY INSTALL COUPLING AND CAP TO PREVENT DAMAGE TO STUB-UP UNTIL GEAR IS SET.
2. INSTALL ROUNDED FITTING BEFORE PULLING CABLES TO AVOID DAMAGE TO CABLES.
3. PROVIDE RGS CONDUIT AT ALL EXTERIOR EXPOSED LOCATIONS.
4. POLYPLUGS WITH PULLING EYES FOR SPARE CONDUITS AND PLYABLE CONDUIT DUCT SEAL COMPOUND AROUND WIRING TO PREVENT GAS, MOISTURE OR INSECTS FROM ENTERING THE ENCLOSURE.

2 EQUIPMENT PAD CONDUIT STUB-UP DETAIL

NOT TO SCALE

9 NOT USED

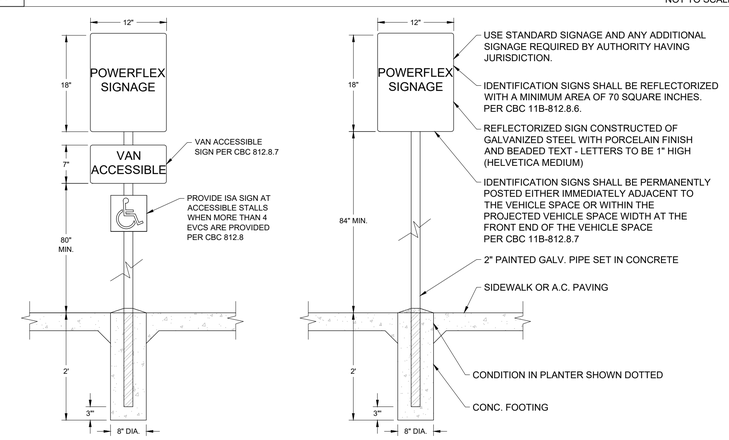

NOTE:
1. POST MOUNT PER CBC SECTION 11B-307.

6 VAN ACCESSIBLE AND STANDARD PARKING EV SIGN DETAIL

NOT TO SCALE

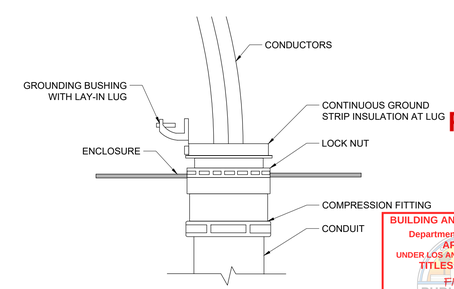

BUILDING AND SAFETY DIVISION
Department of Public Works
APPROVED
UNDER LOS ANGELES COUNTY CODE
TITLES 26, 30 AND 31
FMOKRI
PUBLIC WORKS
09/13/2023 3:45:17 PM
This set of plans and specifications must be kept at the job site at all times. It is unlawful to make any changes, modifications or alterations to these plans or specifications without the prior written permission of the Building Official. The stamping of this set of plans and specifications SHALL NOT, under any circumstances, be deemed to permit or to be an approval of any work or activity that violates any provisions of any County Ordinance or State Law.

3 EQUIPMENT GROUNDING DETAIL

NOT TO SCALE

DEVELOPER:

powerflex EDF renewables
392 FIRST STREET
LOS ALTOS, CA 94022
P: 650.469.3392

ELECTRICAL ENGINEER:

nazarene engineering
NAZARENE ENGINEERING
2514 JAMACHA RD. #502-182
EL CAJON, CA 92019
619.333.6703
WWW.NAZENGINEERING.COM

ENGINEERS STAMP:

REGISTERED PROFESSIONAL ENGINEER
NO. 19677
Exp: 9/30/23
ELECTRICAL
STATE OF CALIFORNIA

DATE SIGNED: 06/02/23

PROJECT NUMBER:	2314-03
DRAWN BY:	RF
CHECKED BY:	JB

REVISIONS

REV	DATE	DESCRIPTION	BY
0	05/12/23	IFP PLAN PACKAGE	JB
1	06/02/23	PLAN CHECK #1	JB

SITE ADDRESS

MARINA DEL REY LOT 5

DEPARTMENT OF REGIONAL PLANNING APPROVED

SHEET TITLE

ELECTRICAL DETAILS

SHEET NUMBER

E301

THE USE OF THESE PLANS AND SPECIFICATIONS SHALL BE RESTRICTED TO THE ORIGINAL SITE FOR WHICH THEY WERE PREPARED AND PUBLICATION THEREOF IS EXPRESSLY LIMITED TO SUCH USE. REPRODUCTION, PUBLICATION, OR RE-USE BY ANY METHOD, IN WHOLE OR IN PART WITHOUT THE EXPRESS CONSENT OF 'NAZARENE ENGINEERING' IS PROHIBITED.

ELECTRICAL DETAIL GENERAL NOTES

NOTES:

1. USE DUCT SEAL COMPOUND TO SEAL ENDS OF CONDUIT (TYPICAL FOR ALL CONDUITS AT EACH END).
2. BUSHINGS SHALL BE USED ON ALL ELECTRICAL CONDUIT STUBS.
3. CONTRACTOR SHALL VERIFY ALL DIMENSIONS WITH THE LATEST MANUFACTURER SPECIFICATIONS FOR DISPENSER PRIOR TO CONSTRUCTION.
4. ANCHOR ALL EQUIPMENT PER MANUFACTURER'S REQUIREMENTS.
5. MINIMUM EQUIPMENT PAD DIMENSIONS INDICATED. CONTRACTOR SHALL ADJUST PER SITE CONDITIONS AND EQUIPMENT SIZE AS REQUIRED.

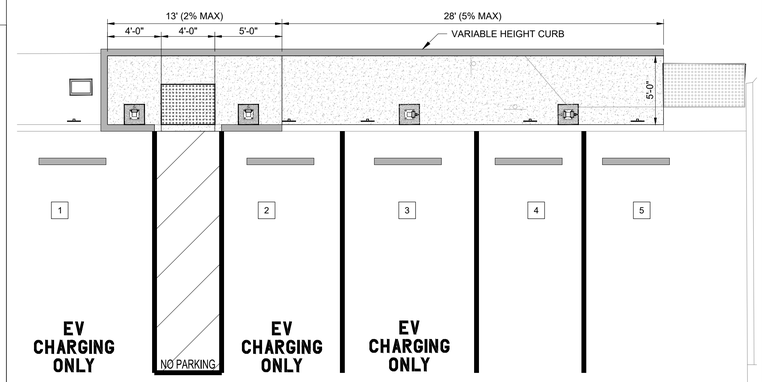

PEDESTRIAN WALKWAY AND DETECTABLE WARNING NOTES:

1. DETECTABLE WARNINGS AND DETECTABLE DIRECTIONAL TEXTURE SHALL ADHERE TO CBC 11B-705.
2. THE DETECTABLE WARNING MAY BE REDUCED TO 24" MINIMUM PER CBC 11B-705.1.2.2.2.1 EXCEPTION.
3. PEDESTRIAN WALKWAY SHALL ADHERE TO CBC 11B-705.1.2.2.

4 ACCESSIBLE PEDESTRIAN WALKWAY DETAIL

SCALE: 3/4" = 1'-0"

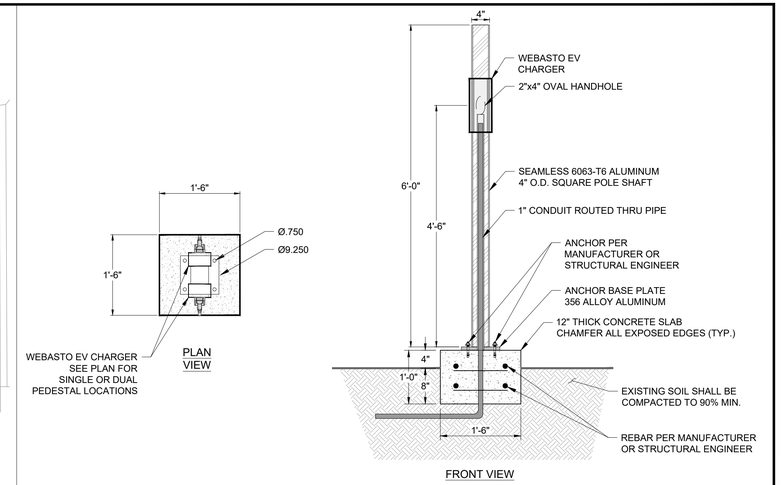

1 TYPICAL EV EQUIPMENT PAD SINGLE OR DUAL PEDESTAL DETAIL 7.7KW WEBASTO CHARGER

SCALE: 3/4" = 1'-0"

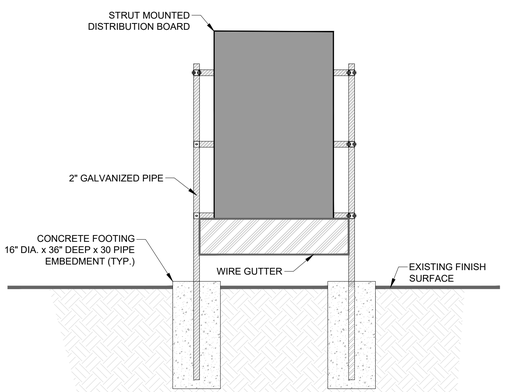

7 TYPICAL STRUT MOUNTED EQUIPMENT DETAIL DISTRIBUTION BOARD

SCALE: 1/2" = 1'-0"

BOLLARD NOTES:

1. DIMENSION BETWEEN BOLLARD TO BOLLARD FACE SHALL BE 54" MAXIMUM.
2. CONTRACTOR SHALL INSTALL TRANSFORMER BOLLARDS AS REQUIRED BY UTILITY STANDARDS.
3. ALIGN BOLLARD PIPE & GROUND INSERT SO EYES ARE LOCATED AT BACK AND FRONT OF BOLLARD (NOT WITHIN TRAVEL WAY).

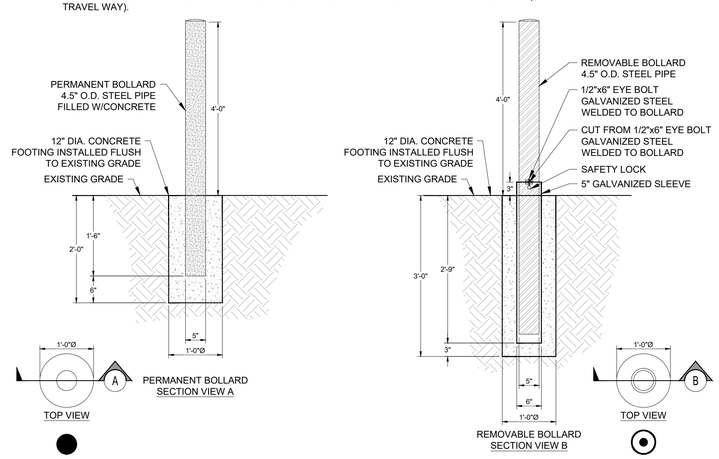

5 PERMANENT AND REMOVABLE BOLLARD DETAILS

SCALE: 3/4" = 1'-0"

2 NOT USED

BUILDING AND SAFETY DIVISION
Department of Public Works
APPROVED
UNDER LOS ANGELES COUNTY CODE
TITLES 26, 30 AND 31
FMOKRI
PUBLIC WORKS
09/13/2023 3:45:11 PM
This set of plans and specifications must be kept at the job site at all times, and it is unlawful to make any changes, modifications or additions to these plans or specifications without the prior written permission of the Building Official. The stamping of this set of plans and specifications SHALL NOT, under any circumstances, be deemed to permit or to be an approval of any work or activity that violates any provisions of any County Ordinance or State Law

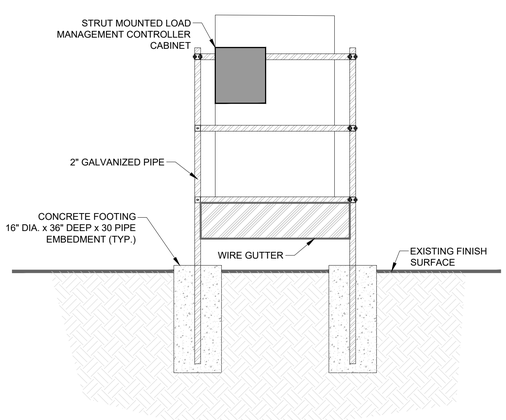

8 STRUT MOUNTED EQUIPMENT DETAIL NEXTUS COMMUNICATIONS CONTROLLER

SCALE: 1/2" = 1'-0"

6 NOT USED

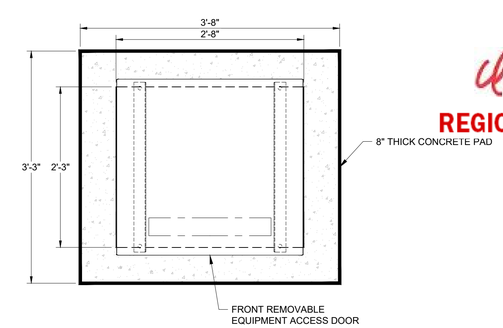

3 EV EQUIPMENT PAD DETAIL 150KVA TRANSFORMER

SCALE: 1" = 1'-0"

DEPARTMENT OF REGIONAL PLANNING APPROVED

DEVELOPER:

powerflex EDF renewables
392 FIRST STREET
LOS ALTOS, CA 94022
P: 650.469.3392

ELECTRICAL ENGINEER:

nazarene engineering
NAZARENE ENGINEERING
2514 JAMACHA RD. #502-182
EL CAJON, CA 92019
619.333.6703
WWW.NAZENGINEERING.COM

ENGINEERS STAMP:

REGISTERED PROFESSIONAL ENGINEER
NO. 19677
Exp: 9/30/23
ELECTRICAL
STATE OF CALIFORNIA

DATE SIGNED: 06/02/23

PROJECT NUMBER:	2314-03
DRAWN BY:	RF
CHECKED BY:	JB

REVISIONS

REV	DATE	DESCRIPTION	BY
0	05/12/23	IFP PLAN PACKAGE	JB
1	06/02/23	PLAN CHECK #1	JB

SITE ADDRESS

MARINA DEL REY LOT 5

SHEET TITLE

ELECTRICAL DETAILS

SHEET NUMBER

E302

THE USE OF THESE PLANS AND SPECIFICATIONS SHALL BE RESTRICTED TO THE ORIGINAL SITE FOR WHICH THEY WERE PREPARED AND PUBLICATION THEREOF IS EXPRESSLY LIMITED TO SUCH USE. REPRODUCTION, PUBLICATION, OR RE-USE BY ANY METHOD, IN WHOLE OR IN PART WITHOUT THE EXPRESS CONSENT OF 'NAZARENE ENGINEERING' IS PROHIBITED.

Nexus Core

Nexus Core is the central brain where the energy optimization and Adaptive Load Management functions are executed and dispatched to the Distributed Energy Resources at your site. **Core** contains a powerful central computer for optimization and historian capabilities and network communication including ethernet switch. **Core** supports Zigbee 3.0 and Wi-Fi/OCPP communications to EV chargers and other IOT devices.

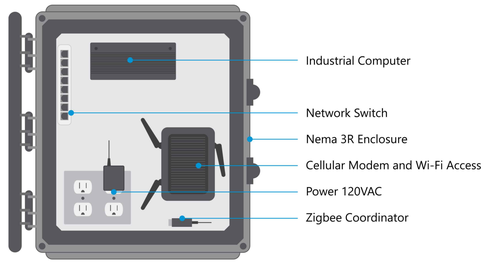

Features

- **Industrial PC:** Provides optimization, load management, communication coordination, and data historian services
- **Network Switch:** Ethernet switch for communications to Nexus nodes, Distributed Energy Resources, and with Cortex, PowerFlex's cloud-based energy management system
- **Modem:** Robust cellular 4G/LTE modem with integral Wi-Fi access point

Options

- Serial RS232/RS485 communications interface
- Optical single or multimode fiber communications interface
- Integrated heater for locations with low ambient temperatures
- External transformer for 208VAC, 240VAC, 277/480VAC or higher voltage installations
- External UPS for critical applications

Nexus **Core**

Technical Specifications

Enclosure	
Material	Polycarbonate
Color	Gray
Dimensions	H: 18.7in (48cm) W: 16.9in (43cm) D: 12.5in (32cm)
Rating	NEMA 3R/IP24
Temperature	Min T: 32F (0C) Max T: 122F (40C) Dual 18W thermostat-controlled fan Integrated heater
Weight	Max 31.5lb (14kg)
Power	120VAC, up to 500W

Modem	
Type	Dual 4G LTE Modem
Ethernet	1 GbE, 1 FE (LAN/WAN switchable)
Providers	AT&T, Verizon, T-Mobile
Throughput	75 Mbps (Firewall)
Wi-Fi	802.11 b/g/n (Wi-Fi 4)

Network Switch	
Ports	16-port PoE+ (8) GbE, 802.3at PoE+ ports (8) GbE RJ45 ports
PoE supply	52W total

Communications	
Protocols	Ethernet Modbus TCP/RTU DNP3 OCPP Zigbee 3.0

site-support@powerflex.com powerflex.com

Webasto
Feel the Drive

TurboDX

Next Generation Electric Vehicle Charger

Highest Level of Safety Available
Your safety is our #1 priority. That's why we built TurboDX with the most advanced and state-of-the-art safety features available. TurboDX ensures a safe and reliable charge every time with leakage and thermal detection, auto-restart and recovery and ground detection against faults. It is UL and cUL listed, safe for indoor or outdoor use and can withstand extreme weather conditions. TurboDX meets the rigorous safety standards mandated by our automotive partners and is backed by a 3-year warranty.

Flexible, Simple and Built for Your Life
Charging your EV should be a seamless experience. TurboDX is a simple plug and play solution. No need to download extra apps, manage notifications, or push extra buttons. With TurboDX all you need to do is plug it in – it's that easy. TurboDX has a slim and compact design which allows it to fit in most garage configurations. For public uses, TurboDX can accommodate a dual, triple or quad installation. The modular design allows for more cars to charge simultaneously and to expand as more chargers are needed. Your life is busy enough, your charging experience shouldn't be.

Key Features:
- **State-of-the-art safety features**
- **Slim compact design**
- **Durable aluminum rear enclosure**
- **Quick read status indicators**
- **Fully potted electronics reduces the risk of thermal shock, thermal dissipation, and static shock**
- **Revolutionary leakage and thermal detection**
- **"Auto-Reboot" for issues during self-check process**
- **"Auto Recovery" if changes in temperature or voltage is detected**
- **Missing ground detection**
- **UL and cUL certified**
- **Easy to use, simply plug-in and charge**

Technical Specifications

	TurboDX 16A	TurboDX 32A
Voltage	208 – 240 VAC (Split Phase or Phase Ground)	
Current	16A	32A
Circuit Breaker Rating	20A	40A
Frequency	50-60Hz	
Maximum Power Output @240V	3.8KW	7.7kW
Cable Length	up to 25 ft (7.62m) available	
Weight	7.75lbs (3.5kg)	12lbs (5.5kg)
Dimensions	12" x 5" x 3.5" (approximate)	
Storage Temperature	-40C (-40°F) to +60C (140°F)	
Operating Temperature	-40C (-40°F) to +55C (131°F)	
Indoor / Outdoor	Yes [Type 4 (IP66) enclosure	
Relative Humidity	Up to 95% non-condensing	
Charge Coupler	SAE J1772 compliant	

FC LISTED LISTED

CALL US TO ORDER TODAY!
585.533.4051
evCHARGEsolutions.com™
7444 W. SENECA TURNPIKE ROAD | PEORIA, NY 14424

DEVELOPER:

powerflex EDF renewables
392 FIRST STREET
LOS ALTOS, CA 94022
P: 650.469.3392

ELECTRICAL ENGINEER:

nazarene engineering
NAZARENE ENGINEERING
2514 JAMACHA RD. #502-182
EL CAJON, CA 92019
619.333.6703
WWW.NAZENGINEERING.COM

ENGINEERS STAMP:

REGISTERED PROFESSIONAL ENGINEER
NO. 19677
Exp: 9/30/23
ELECTRICAL
STATE OF CALIFORNIA

DATE SIGNED: 06/02/23

PROJECT NUMBER:	2314-03
DRAWN BY:	RF
CHECKED BY:	JB

REVISIONS

REV	DATE	DESCRIPTION	BY
0	05/12/23	IFP PLAN PACKAGE	JB
1	06/02/23	PLAN CHECK #1	JB

SITE ADDRESS
MARINA DEL REY LOT 5

DEPARTMENT OF REGIONAL PLANNING APPROVED

SHEET TITLE
EQUIPMENT DATASHEETS

SHEET NUMBER
E401

THE USE OF THESE PLANS AND SPECIFICATIONS SHALL BE RESTRICTED TO THE ORIGINAL SITE FOR WHICH THEY WERE PREPARED AND PUBLICATION THEREOF IS EXPRESSLY LIMITED TO SUCH USE. REPRODUCTION, PUBLICATION, OR RE-USE BY ANY METHOD, IN WHOLE OR IN PART WITHOUT THE EXPRESS CONSENT OF 'NAZARENE ENGINEERING' IS PROHIBITED.

EV CHARGING VINYL WRAP OPTIONS

Option 1

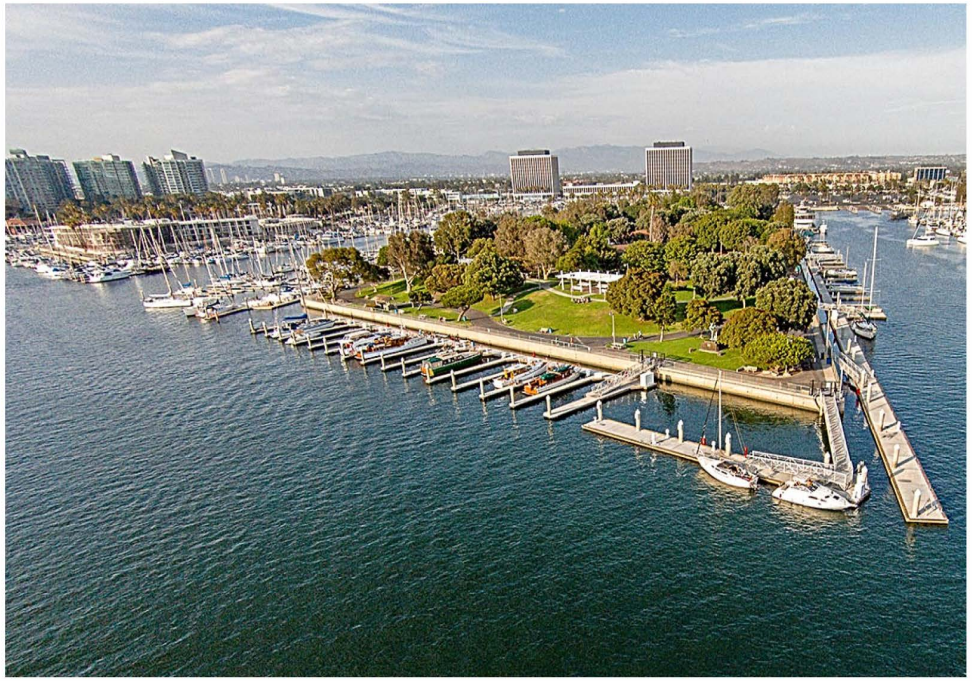

Option 2

Option 3

Examples of EV Charging Posts Installed at Other DBH Sites

(424) 526-7777 • 13837 Fiji Way, Marina del Rey, CA 90292 • beaches.lacounty.gov

Caring for Our Coast

Gary Jones
Director

Amy M. Caves
Chief Deputy Director

Carol Baker
Deputy Director

LaTayvius R. Alberty
Deputy Director

February 21, 2024

TO: Design Control Board

FROM: Gary Jones, Director

SUBJECT: **ITEM 6A - ONGOING ACTIVITIES REPORT**

BOARD ACTIONS ON ITEMS RELATING TO MARINA DEL REY

On November 7, 2023, the Board of Supervisors (BOS) approved the proposed Aubrey Austin Park Rehabilitation Project, Capital Project No. 89222, located at 4500 Via Marina in Marina del Rey, with a total project budget of $1,500,000. In addition, the BOS approved an appropriation adjustment to transfer $973,000 from the Services and Supplies Marina Replacement Accumulative Capital Outlay Fund to the project to fully fund the project, authorized the Director of Public Works to deliver the proposed project using a Board-approved Job Order Contract, and authorized the Director of Beaches and Harbors to waive the right-of-entry permit fees for the project.

On December 19, 2023, the BOS approved the revised total project budget of $535,000, an increase of $187,000 from the previously Board-approved budget of $348,000, for the Marina Del Rey Boat Launch Restroom Renovation Project, Capital Project No. 89158, to fully fund the scope of work. In addition, the BOS approved an appropriation adjustment to transfer $187,000 from the Marina Replacement Accumulative Capital Outlay Fund Services and Supplies budget to the project.

On January 9, 2024, the BOS, acting as the Governing Body of the County Flood Control District, approved the Boone Olive Pump Station Upgrade Project in the City of Los Angeles and adopted the plans and specifications at an estimated construction contract amount between $4,500,000 and $6,750,000. In addition, the BOS advertised for bids to be received before 11:00 a.m. on February 27, 2024, and found pursuant to State Public Contract Code, Section 3400, that it is necessary to specify designated items by specific brand name in order to match other products in use on a particular public improvement either completed or in the course of completion. Furthermore, the BOS instructed the Director of Beaches and Harbors to waive parking fees in an estimated amount of $30,000 for 24 vehicles at Parking Lots 7 or 8 in the unincorporated community of Marina del Rey, to allow for staging of construction equipment for the duration of construction.

REGIONAL PLANNING COMMISSION'S CALENDAR
No items related to Marina del Rey were on the October, November, or December 2023 Regional Planning Commission's agenda.

CALIFORNIA COASTAL COMMISSION CALENDAR
No items related to Marina del Rey were on the October, November, or December 2023 California Coastal Commission agenda.

FUTURE MAJOR DESIGN CONTROL BOARD ITEMS
There are no future major Design Control Board items at this time.

SMALL CRAFT HARBOR COMMISSION MINUTES
The August and September 2023 Small Craft Harbor Commission meeting minutes are attached. The October 2023, December 2023, and January 2024 meetings were cancelled. The November 2023 meeting minutes are pending.

REDEVELOPMENT PROJECT STATUS REPORT
The updated "Marina del Rey Redevelopment Projects Report" is attached.

GJ:WO:lr
Attachments (3)

SMALL CRAFT HARBOR COMMISSION MINUTES
August 29, 2023

Commissioners: Nathaniel Salazar, Chair; Gregory Gorman, Vice Chair; Bernard Kozacik; Richard Montgomery; Allyn Rifkin; (excused absence)

Department of Beaches and Harbors (DBH): Amy Caves, Chief Deputy Director; LaTayvius Alberty, Deputy Director; Ivy Bordenave-Priestly, Lease Specialist; Amir Tadros, Senior Real Property Agent

County: Parjack Ghaderi, Principal Deputy County Counsel

Item 1 - Call to Order and Pledge of Allegiance
Chair Salazar called the meeting to order at 10:00 a.m., followed by the Land Acknowledgement Statement and the Pledge of Allegiance. Ivy Bordenave-Priestly read the hybrid meeting procedures.

Item 2 – Approval of Minutes
Motion to approve April 20, 2023, and May 10, 2023 Meeting minutes by Vice Chair Gorman, seconded by Mr. Montgomery.

Ayes: 4, Chair Salazar, Vice Chair Gorman, Mr. Kozacik and Mr. Montgomery

Item 3 – Communication from the Public
There was no communication from the public.

Item 4 – Communication with the Commissioners
The commissioners disclosed communication from the Marina del Rey Lessees' Association, and, Pacific Ocean Management.

Item 5a – Marina Sheriff
Sergeant Ron Knolls presented the Sheriff's report.

Mr. Montgomery asked for an explanation of the liveaboard permit expiration process and the citation process.

Sergeant Knolls explained that once identified as a liveaboard, they go through the process with the dock master and through yearly inspections. He further explained that once the inspection is passed some drop-off, move, or sell their boat, but, remain registered in the sheriff's system until their status was identified and removed. Individuals identified as "sneakaboards" are issued notices, and dock master contacts them via email, phone, and deputies contact them to get registered. Citations are issued as a last resort.

Item 5b – MdR and Beach Special Events
Catrina Love reported on the summer concerts, sound relaxation with meditation, sunset yoga, and water bus service which ends Labor Day weekend.

Item 5c – Marina Boating Section Report

Michael Blenk reported that Anchorage 47 has one 42-feet, five 38-feet, three 34-feet, one 30-feet, one 28-feet, seven 24-feet, six 27-feet, and five 22-feet vacant slips available. Parcel 77 powerboat storage is full, and Mast-Up storage has 36 spaces available. He announced that dinghy storage for kayaks or paddleboards is now available at parcel 77.

Item 5d – Marina del Rey Maintenance Report
Jose Bedolla reported on the breakwater light project and Dock No. 2 at the public boat launch ramp.

Mr. Montgomery inquired about the condition of the trash interceptor at Ballona Creek.

Jose Bedolla replied that DPW could provide the information; however, during the storm, it worked well and the trash level was minimal.

Item 6a
None

Item 7a – New Business – Marina del Rey Affordable Housing Policy Update
Porsche Nauls presented the report.

Pam Gore agreed with more affordable housing but expressed concern about the potential traffic problem on Parcel 147.

David Levine, Marina del Rey Lessees Association, spoke of their concerns about the latest draft and requested to move the endorsement to a later date to meet with the County staff to discuss issues.

Eric Grossman, Equity Residential, agreed with more affordable housing but requested a postponement on the item until further review.

Patricia Younis spoke of Marina del Rey's real estate and economic structures and noted that Marina del Rey is very different than any of the other Los Angeles County areas. Marina del Rey is a compilation of ground leases many of which were highly and very expensively negotiated over many years. The county has a moral, legal, and ethical responsibility to live upto its lease terms it negotiated with its lessees. Lastly, she urged the County to honor the lease agreements in place.

Debra Fixen, Marina del Rey Lessee Association, agreed with the 30 percent goal and urged the County to look at existing leases, consider the way they were written, and consider the financial ramifications of changing those agreements. She also requested a continuation of this item until further analysis can be given.

Kevin McKee, Marina Harbor Apartments, supported additional affordable housing and expressed concern about the updated policy received only the night before. He asked for additional time to work with all stakeholders involved to develop a plan that considers all stakeholders.

Tim Riley, Marina del Rey Lessees Association, supported the 30 percent affordable housing goal but needs more time to work with the County through additional dialogue.

Vice Chair Gorman expressed disappointment in the comments made by the public speakers and noted that this item was an emergency. He clarified that the County cannot change the existing lease that has been agreed to.

Mr. Montgomery requested clarification on the goal of 30 percent. Is it up to or is it a minimum of 30 percent?

Porsche replied that the goal is to achieve 30 percent in the Marina-wide.

Amy Caves explained that the goal is 30 percent Marina-wide; however, on a project to which this policy applies, it will be 30 percent. If a lessee is not seeking any discretionary amendment such as a major extension, then this policy will not apply to that lease. If a new project or substantial rehab project occurs that reopens the lease for renegotiations it will require 30 percent affordable units for that project.

Mr. Montgomery inquired if replacement housing obligations include the extremely low income.

Porsche replied affirmatively and explained that a replacement lower-income unit must be replaced with a likekind unit.

Mr. Montgomery also expressed concern regarding the one-day, short review time.

Amy Caves explained that DBH staff met with housing advocacy groups and the Marina del Rey Lessees Association. In those meetings, they discussed major revisions to the policy in clarification of the issues brought up by the lessees. She further explained that although they had a limited time to review the updated policy, there were a handful of clarification revisions and nothing of substance.

Maral Tashjian explained that the changes were minor and redline copies were provided to the lessees so they could see where the changes occurred.

Mr. Kozacik supports the 30 percent goal and expressed concern about the limited time for the review of the policy.

Chair Salazar also mentioned the shortness of one day for a review of the policy.

Amy Caves clarified that the policy was made available a couple of weeks ago.

Vice Chair Gorman stated that he did receive the policy weeks ago and did not note any major changes.

Chair Salazar noted the importance of moving forward with this policy due to the homelessness issue in Los Angeles. He noted that DBH assured that all the groups involved will participate in the policy implementation guidelines.

Motion to approve the Marina del Rey Affordable Housing Policy Update by Mr. Montgomery, seconded by Vice Chair Gorman

Ayes: 3, Chair Salazar, Vice Chair Gorman, and Mr. Montgomery
Abstain:1, Mr. Kozacik

Item 8 – Staff Reports
Ivy Bordenave-Priestley presented the staff report.

Adjournment
Chair Salazar adjourned the meeting at 11:15 am.

SMALL CRAFT HARBOR COMMISSION MINUTES
September 13, 2023

Commissioners: Nathaniel Salazar, Chair; Gregory Gorman, Vice Chair; Richard Montgomery; Allyn Rifkin; (excused absence), Bernard Kozacik; (excused absence)

Department of Beaches and Harbors (DBH): LaTayvius Alberty, Deputy Director; Steve Penn, Chief of Asset Management Division; Ivy Bordenave-Priestly, Lease Specialist; Amir Tadros, Senior Real Property Agent

County: Sevanna Hartonians, Deputy County Counsel

Item 1 - Call to Order and Pledge of Allegiance
Chair Salazar called the meeting to order at 10:00 a.m., followed by the Land Acknowledgement Statement and the Pledge of Allegiance. Ivy Bordenave-Priestly read the hybrid meeting procedures.

Item 2 – Approval of Minutes
Motion to approve July 25, 2023 Meeting minutes by, Mr. Montgomery seconded by Vice Chair Gorman.

Ayes: 3, Chair Salazar, Vice Chair Gorman and Mr. Montgomery

Item 3 – Communication from the Public
Mack Steagall expressed concern regarding the poor condition of the main channel markers.

Elliot Zimmerman asked for dredging project updates.

Item 4 – Communication with the Commissioners
None

Item 5a – Marina Sheriff
Sergeant Ron Knolls presented the Sheriff's report.

Pam Gore expressed her gratitude for the Sheriff's efforts with the illegal charters issue.

Item 5b – MdR and Beach Special Events
Catrina Love reported on Beach Eats, Dance MdR, Free Marina Movie Nights, Beach Shuttle, and Marina Drum Circle.

Item 5c – Marina Boating Section Report
Michael Blenk reported that Anchorage 47 has one 42-feet, five 38-feet, four 34-feet, one 30-feet, three 28-feet, seven 24-feet, six 27-feet, and four 22-feet vacant slips available. Parcel 77 powerboat storage is full, and Mast-Up storage has 36 spaces available.

Item 5d – Marina del Rey Maintenance Report
Jose Bedolla reported on the breakwater light project and mentioned that the dredging project is being worked on.

Vice Chair Gorman requested a timeline for the dredging project.

Item 6a
None

Item 7a – New Business – Proposed License Agreement To Southland Farmers' Market Association For Marina del Rey Farmers' Market
Catrina Love presented the report.

Motion to approve the Marina del Rey Proposed License Agreement To Southland Farmers' Market Association For Marina del Rey Farmers' Market by Mr. Montgomery, seconded by Vice Chair Gorman

Ayes: 3, Chair Salazar, Vice Chair Gorman, and Mr. Montgomery

Item 8 – Staff Reports
Steve Penn presented the staff report.

Elliot Zimmerman spoke about the illegal charter enforcement efforts of Los Angeles County, Department of Beaches and Harbors.

Vice Chair Gorman inquired about the California Yacht Club's promenade project status and the enforcement of the illegal charters.

Steve Penn stated that a meeting with the California Yacht Club has been scheduled to discuss their design.

Mr. Montgomery asked who is in charge of the insurance for private docks.

Steve Penn explained that there are insurance requirements in the ground leases between the County and lessees, which DBH administers; and also insurance requirements in the slip rental agreement between the lessees and their slip tenants, which DBH does not administer.

Adjournment
Chair Salazar adjourned the meeting at 10:46 a.m.

Marina del Rey Redevelopment Projects Report
As of February 21, 2024

Parcel No. Project Name	Representative	Redevelopment Proposed	Massing and Parking	Status
113 -- Mariner's Village	Mark Wagner	* Renovation of 981 apartments * Improvements to promenade	**Massing** – Existing buildings to remain. **Parking** – Existing parking to remain.	**Proprietary** – Item opened on 9/23/2013. On October 30, 2018, the Los Angeles County Board of Supervisors approved an option for an amended at restated lease. The revised project will include 20% affordable units. The Option for the Amended and Restated Lease was extended for one year, until October 29, 2023, at the October 18, 2022 Board of Supervisors Meeting. In October 2023, Lessee exercised the Option for the Amended and Restated Lease. In October 2023, Lessee and County fully executed the Amended and Restated Lease. In December 2023, Lessee recorded the CC&Rs and Memorandum of Lease with LA County Recorder's Office. **Regulatory** – The Regional Planning Commission approved an after-the-fact Coastal Development Permit (CDP) for the previous removal of waterbird nests. The appeal of that CDP was approved by the Coastal Commission in September 8, 2021. Lessee is tentatively scheduled to present at the Marina del Rey Design Control Board meeting scheduled for January 19, 2022. Lessee′s presentation at Jan 19, 2022′s DCB meeting was continued to allow more time to review the proposal. Staff scheduled ex-parte meetings with Meg Coffee and Chair Cho. Lessee′s design plans were approved at the March 2022 DCB meeting.

(424) 526-7777 ✦ 13837 Fiji Way, Marina del Rey, CA 90292 ✦ beaches.lacounty.gov

Caring for Our Coast

Gary Jones
Director

Amy M. Caves
Chief Deputy Director

Carol Baker
Deputy Director

LaTayvius R. Alberty
Deputy Director

February 21, 2024

TO: Design Control Board

FROM: Gary Jones, Director

SUBJECT: **ITEM 6B – MARINA DEL REY SPECIAL EVENTS**

MARINA DEL REY EVENTS

BURTON CHACE PARK WALKING CLUB

Burton Chace Park ♦ Lobby ♦ 13650 Mindanao Way ♦ Marina del Rey
Tuesdays and Thursdays
10:30 a.m. – 11:30 a.m.
Cost: FREE

Looking for a new way to exercise? The Department of Beaches & Harbors (Department) offers a weekly walking group to help you get moving to increase your heart rate and daily step count while taking in beautiful views of the Marina del Rey harbor. Registration is required by emailing chacepark@bh.lacounty.gov.

For more information: Call (424) 526-7910 or email chacepark@bh.lacounty.gov

BURTON CHACE PARK ZUMBA CLASS

Burton Chace Park ♦ 13650 Mindanao Way ♦ Marina del Rey
Thursdays
3:30 p.m. – 4:30 p.m.
Cost: FREE

Ditch your boring workout and join the Department's free outdoor Zumba class at Burton Chace Park to get cardio-fit while moving to the rhythms of Latin-inspired dance and music! Each class is limited to 15 people. Pre-registration is required for each class by emailing chacepark@bh.lacounty.gov.

For more information: Call (424) 526-7910 or email chacepark@bh.lacounty.gov

DRAWING & PAINTING CLASS

Burton Chace Park ♦ 13650 Mindanao Way ♦ Marina del Rey
Fridays
5:00 p.m. – 6:30 p.m.
Cost: FREE

The Department offers a free drawing and watercolor art class for beginners (ages 14 years and older). Classes are limited to 15 people and supplies are provided. Pre-registration for each class is required by emailing chacepark@bh.lacounty.gov.

For more information: Call (424) 526-7910 or email chacepark@bh.lacounty.gov

MARINA DEL REY FARMERS' MARKET

Lot #11 ♦ 14101 Panay Way ♦ Marina del Rey
Saturdays
9:00 a.m. – 2:00 p.m.

Each Saturday, the Department and Southland Farmers' Market Association present the Marina del Rey Farmers' Market, offering fresh, locally grown fruits and veggies (organic and conventional). Also, enjoy delicious prepared and prepackaged foods, and shop for artisanal crafts from local small vendors. Paid parking is available for 50 cents for every 15 minutes.

For more information: Call (424) 526-7900 or visit marinadelrey.lacounty.gov

MARINA DEL REY DRAGON BOAT FESTIVAL

Burton Chace Park ♦ 13650 Mindanao Way ♦ Marina del Rey
Saturday, March 2, 2024
7:00 a.m. – 2:00 p.m.

Join the Los Angeles County Dragon Boat Club, in collaboration with the Department, for the Marina del Rey Dragon Boat Festival at Burton Chace Park! This free event will feature 40 local and out-of-state dragon boat teams and clubs competing to be the fastest team on the water. Enjoy arts and crafts, entertainment, and food truck fare. Paddlers between 12 – 80 years old will compete. Spectators are encouraged to cheer and watch the races from Burton Chace Park.

For more information: Visit lacountydragonboatfestival.com

LOS ANGELES COUNTY BLOOD DRIVE

Burton Chace Park Community Room ♦ 13650 Mindanao Way ♦ Marina del Rey
Thursday, March 14, 2024
10:00 a.m. – 4:00 p.m.

Take part in this lifesaving blood drive hosted by the Department. Please remember to eat well and increase your fluid intake a couple of days before and on the day of your donation appointment. A photo ID is required.

To schedule your donation, visit redcrossblood.org and enter sponsor code: LACBH or contact Naomi Guzman at nguzman@bh.lacounty.gov.

For more information: Call (800) RED-CROSS

W.A.T.E.R. PROGRAM SPRING SAILING CLASSES

Boathouse - Burton Chace Park ♦ 13640 Mindanao Way ♦ Marina del Rey

Los Angeles County Lifeguards will instruct the Department's sailing courses that teach students basic sailing knowledge and terms, boat maintenance and rigging, knot tying, tacking, docking and instruction to ocean sailing. Students will learn to sail on 14-foot Capri sailboats (with main sail and jib) and Laser sailboats. In the final days of the session, students may get experience on Catalina 275 Sport.

Financial aid available. Please call for details.

2024 SPRING SESSION:
Dates: March 26 – 29 (4-day session)
Time: 10:00 a.m. – 4:00 p.m.

Ages: 11 – 17 years old
Class Size: 6 – 10 students with 3 Lifeguard instructors
Level: Beginning
Fee: $300

*NOTE: Applicants must successfully complete a 100-yard swim test in 2 minutes and 20 seconds to be eligible.

For more information: Call (424) 526-7888 or visit marinadelrey.lacounty.gov

GJ:CML:da

(424) 526-7777 • 13837 Fiji Way, Marina del Rey, CA 90292 • beaches.lacounty.gov

Caring for Our Coast

Gary Jones
Director

Amy M. Caves
Chief Deputy Director

Carol Baker
Deputy Director

LaTayvius R. Alberty
Deputy Director

February 21, 2024

TO: Design Control Board

FROM: Gary Jones, Director

SUBJECT: ITEM 6C – DESIGN CONTROL BOARD ANNUAL REPORT

Each commission is required to provide an update to the Board of Supervisors about its activities through an annual report. Attached for your consideration is the Design Control Board Annual Report for 2023 which includes the DCB's roles and responsibilities, historical background, annual work plan, accomplishments, and ongoing long-term projects.

GJ:WO:ts

Attachments (1)

Los Angeles County
Small Craft Harbor Design Control Board

2023 Annual Report

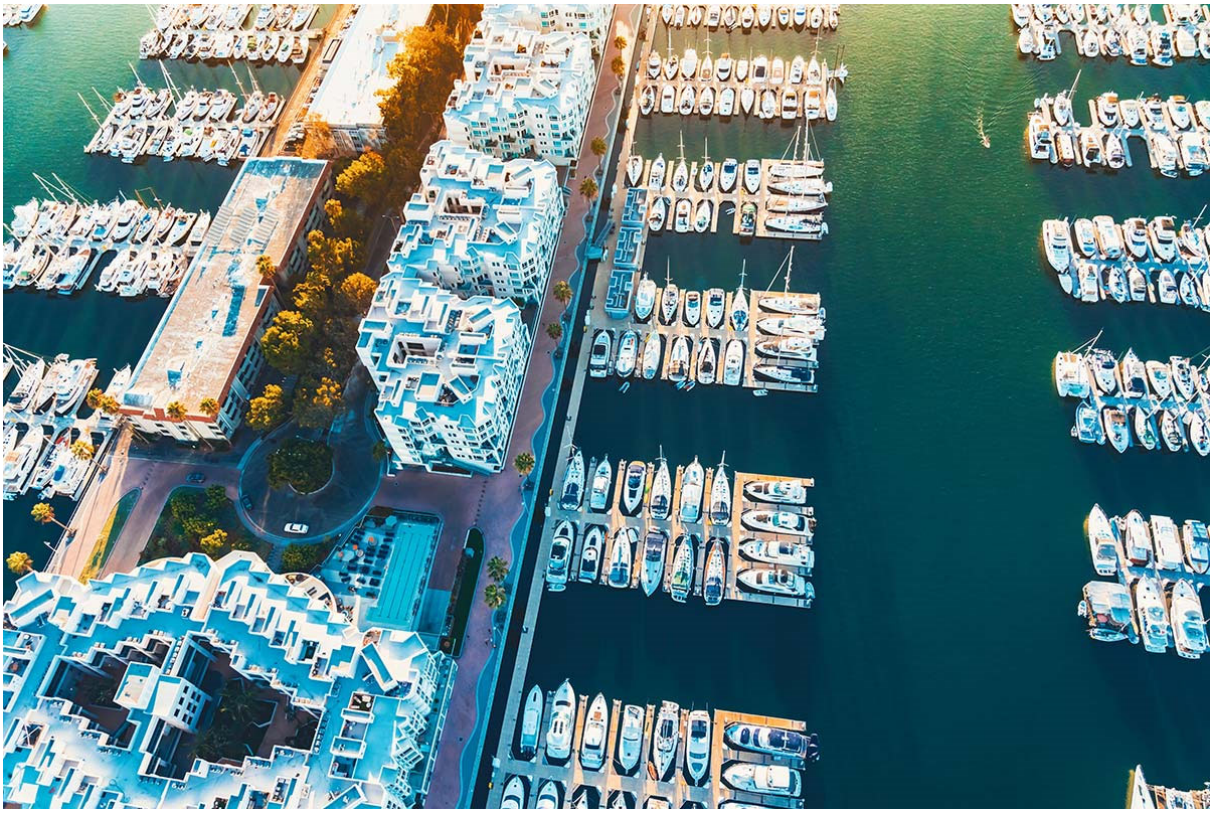

January – December 2023

13837 Fiji Way
Marina del Rey, CA 90292
(424) 526-7777
http://beaches.lacounty.gov/design-control-board

First District (Solis)
Meg Rushing Coffee
Second District (Mitchell)
Genelle Brooks-Petty
Third District (Horvath)
Vacant
Fourth District (Hahn)
Steven Cho
Fifth District (Barger)
Hal Suetsugu

Mission Statement

The mission of the Small Craft Harbor Design Control Board (DCB) is to ensure that all new improvements and developments in Marina del Rey maintain a high quality of design that complements the water and boating, distinguishes the Marina as a premier waterfront visitor-serving destination, improves the perception of the Marina as a functioning harbor, embraces the right of the public to enjoy this recreational resource, and enhances opportunities for boating and recreation in the Marina.

Design Control Board Authority

DCB reviews all projects that involve exterior modifications or improvements to properties in Marina del Rey. This includes new development, renovations, repainting, signage, landscaping, and other related activities. DCB reviews a project's site planning, architecture, landscaping, hardscape, and signage to ensure that Marina del Rey is maintained as a desirable location for County residents and visitors alike. Maintaining the Marina supports the County's Strategic Plan Goal III under Strategy III.3.2: Manage and Maximize County Assets. Marina del Rey is owned and overseen by the County, and DCB's oversight protects the County's asset by enforcing architectural and design standards.

The responsibilities of DCB are to: (a) review and approve the architectural design and landscaping of improvements to be constructed in Marina del Rey; (b) advise the Department of Beaches and Harbors (DBH) concerning the implementation of architectural design regulations and policies and related matters; and (c) perform such other duties as may be requested by the Board of Supervisors (BOS).

Makeup of the Design Control Board

DCB is made up of five members appointed by the BOS to represent each supervisorial district. DCB members must have relevant expertise in architecture, landscape architecture, civil engineering, land development, business management, construction, or planning.

During this report period there were four board members and one vacancy. On May 4, 2023, Board Member Tony Wong, representing the Fifth Supervisorial District, resigned from DCB after 28 years of service. Board Member Hal Suetsugu was appointed to DCB by the BOS on June 6, 2023 to represent the Fifth Supervisorial District.

Historical Background

On February 23, 1960, BOS adopted an order appointing DCB "to assure conformity on the part of successful bidders who may construct improvements within the Small Craft Harbor." This was followed in 1961 with the BOS approving and adopting the original "Specifications and Minimum Standards of Architectural Treatment and Construction for Marina del Rey." In this document,

DCB was defined as "the Board appointed by the Board of Supervisors to review and approve the architectural design and arrangement of facilities constructed in Marina del Rey." That document was revised in 1971 and remains in use to this day. DCB has reviewed all projects that were built in the Marina since 1961, when the harbor was first constructed. Today DCB reviews projects based on the parameters established in the 2012 Marina del Rey Local Coastal Program and the 2022 Marina del Rey Design Guidelines.

Annual Work Plan

DCB's objective for the coming year is to continue to review architectural design and landscaping improvement projects for Marina del Rey properties. DCB will continue to have scheduled monthly meetings to provide timely project reviews for applicants.

Annual Accomplishments

DCB held three meetings from January to December 2023. Each meeting held was attended by three DCB members. During this period, DCB reviewed and made recommendations on 15 projects, including signage, electric vehicle charging stations, and building renovations. For example, DCB recommended approval of a final site design for exterior improvements at Marina 41 Apartments, located at the Parcel 102 leasehold. In addition, DCB recommended approval of the Aubrey Austin Park Renovation project. In addition, DCB members participated in various voluntary board briefings to review preliminary designs for projects including the Aubrey Austin Park Renovation, Marina Beach Non-Motorized Boat Storage and Restroom Renovation, and the new Marina del Rey Parking Structure. Additionally, DCB approved numerous new façade improvements and signage requests from new commercial tenants. Below is a list of projects that were reviewed by DCB:

- Parcel 28 Wayfarer Apartments Exterior Paint (Approved)
- Parcel 33 Admiralty Way Wireless Telecommunication in the ROW (Approved)
- Parcel 44 Twelve Nail Bar Tenant Signage (Approved)
- Parcel 44 Winston Pies Tenant Signage (Approved)
- Parcel 44 South Coast Corinthian Yacht Club Awning and Signage (Approved)
- Parcel 44 Tesla Supercharging Stations (Approved)
- Parcel 44 Alfred Tenant Signage (Approved)
- Parcel 49M Marina del Rey Parking Structure Conceptual Design (Approved)
- Parcel 50 Barnes & Noble Tenant Signage (Approved)
- Parcel 50 Crumbl Cookies Awning and Tenant Signage (Approved)
- Parcel 95 Coco Beach Bar and Grill Tenant Signage (Approved)
- Parcel 102 Marina 41 Apartments Exterior Improvements (Approved)
- Parcel BB Loyola Marymount Boathouse Exterior Improvements and Tenant Signage (Approved)

- Parcel BR Aubrey Austin Park Renovation Final Design (Approved)
- Parcels HS & 91 Marina "Mother's" Beach Renovation Conceptual Design (Approved)

Future Projects

DBH is working on a new "Signage and Gateways Master Plan" for Marina del Rey. The purpose of the plan is to update and replace the existing gateway, wayfinding, and informational signage throughout Marina del Rey in order to (a) create an identity and sense of place for the Marina, (b) enhance the experience of Marina del Rey visitors by making the community more easily navigable, and (c) create awareness of and highlight water-oriented activities and community features, consistent with the urgent community needs and priorities identified through the Marina del Rey for All initiative.

A conceptual plan for this project was approved by DCB in December 2017. DBH is working with a consultant to develop revised conceptual designs for the project, which will be presented to DCB for review and approval in the near future.