REVISED

County of Los Angeles
CHIEF EXECUTIVE OFFICE
Kenneth Hahn Hall of Administration
500 West Temple Street, Room 713, Los Angeles, California 90012
(213) 974-1101
http://ceo.lacounty.gov

WILLIAM T FUJIOKA
Chief Executive Officer

"To Enrich Lives Through Effective And Caring Service""

Board of Supervisors
GLORIA MOLINA
First District

MARK RIDLEY-THOMAS
Second District

ZEV YAROSLAVSKY
Third District

DON KNABE
Fourth District

MICHAEL D. ANTONOVICH
Fifth District

July 08, 2014

ADOPTED
BOARD OF SUPERVISORS
COUNTY OF LOS ANGELES

10 July 8, 2014

SACHI A. HAMAI
EXECUTIVE OFFICER

The Honorable Board of Supervisors
County of Los Angeles
383 Kenneth Hahn Hall of Administration
500 West Temple Street
Los Angeles, California 90012

Dear Supervisors:

EIGHT-YEAR LEASE – DEPARTMENT OF MENTAL HEALTH
21730 AND 21732 SOUTH VERMONT AVENUE, TORRANCE
~~(FOURTH DISTRICT)~~ (SECOND DISTRICT)
(3 VOTES)

SUBJECT

A new eight-year lease for 7,021 square feet of office space, and 24 on-site parking spaces for the Department of Mental Health's Wellness Center and Tele-Mental Health Clinical Hub.

IT IS RECOMMENDED THAT THE BOARD:

1. Find that the lease is categorically exempt from the provisions of the California Environmental Quality Act pursuant to Class 1 of the Environmental Document Reporting Procedures and Guidelines adopted by the Board, on November 17, 1987, and Section 15301 of the State of California Environmental Quality Act Guidelines (Existing Facilities).

2. Approve and instruct the Chairman to sign the eight-year lease with Hong Kong Garden, Inc. (Lessor) for approximately 7,021 square feet of office space, and 24 on-site parking spaces at the Vermont Village Shopping Center located at 21732 South Vermont Avenue, Suite 210, and 21730 South Vermont Avenue, Suite 122, Torrance, for the Department of Mental Health at a first year rental cost of $221,583, and a maximum one-time Tenant Improvement cost of $562,130. The rental and related costs are to be funded under the Mental Health Services Act and Sales Tax Realignment funds.

3. Authorize the Director of Internal Services, or the Lessor, at the direction of the Chief Executive Officer, to acquire telephone, data, and low voltage systems at a cost not to exceed $165,000, which will be paid by the Department of Mental Health via lump sum payment.

4. Authorize the Chief Executive Officer, Directors of Mental Health and Internal Services to implement the project. The lease will be effective upon approval by the Board, but the term and rent for the expansion will commence upon completion of the improvements by the Landlord and acceptance by the County.

PURPOSE/JUSTIFICATION OF RECOMMENDED ACTION

The proposed lease for 7,021 square feet of office space at the Vermont Village facility (Center) is comprised of 3,511 square feet of office space, which includes the existing 1,769 square feet and an additional 1,742 square feet, at 21732 South Vermont Avenue, Suite 210, for the Department of Mental Health's (DMH) Wellness Center, and 3,510 square feet at 21730 South Vermont Avenue, Suite 122, for its Tele-Mental Clinical Health Hub (Hub) currently located at 150 West 7th Street, San Pedro (San Pedro).

The Wellness Center has occupied 1,769 square feet of office space on the second floor of the 21732 building since 2008. This lease allows DMH to expand the program an additional 1,742 square feet, for a combined total of 3,511 square feet of contiguous space. The expanded space will provide DMH with additional interview rooms, group rooms, and enlarged lobby area to adequately serve its clients. The Wellness Clinical Team provides services to clients assessed in the maintenance stage of their recovery. Services provided include mental health assessment, crisis intervention, medication support, co-occurring disorder treatment, individual and group psychotherapy, and collaborative mental health and primary care.

The proposed lease allows DMH to relocate and expand its newly formed Tele-Mental Health program. Its current San Pedro location served as a temporary location during the program's initial formation phase. The Hub provides psychiatric services via tele-technology to clients with critical mental health needs at selected hard-to-recruit and remote sites, or to facilities with a shortage of psychiatrists. Staff will also coordinate a system-wide multipoint network, enabling participating clinics serving Healthy Way Los Angeles enrollees to provide psychiatric services to DMH clients. This includes clinics participating in the Low Income Health Plan who care for seniors and persons with disabilities. The proposed lease will provide the necessary space for these County requirements.

Implementation of Strategic Plan Goals

The Countywide Strategic Plan Goal of Operational Effectiveness (Goal 1) directs that we maximize the effectiveness of process, structure, and operations to support timely delivery of customer oriented and efficient public services. The proposed lease supports this goal by delivering a facility that supports efficient public service. The proposed lease is in conformance with the Asset Management Principles as outlined in Attachment A.

FISCAL IMPACT/FINANCING

The proposed lease will provide DMH the combined use of 7,021 square feet of office space, and 24 on-site parking spaces at an annual lease cost of $221,583. There is a one-time maximum Tenant Improvement (TI) reimbursement cost of $562,130 for the construction of improvements and the purchase of furniture. The County is responsible for electricity and janitorial service. Attachment B is an overview of the lease costs.

Sufficient funding for the proposed lease costs is included in the Fiscal Year (FY) 2014-15 Rent Expense budget and will be billed back to DMH. DMH has sufficient funding in its FY 2014-15 operating budget to cover the projected lease costs.

FACTS AND PROVISIONS/LEGAL REQUIREMENTS

The proposed lease includes the following provisions:

- An eight-year term effective upon approval by the Board, with the term and rent commencing upon completion of the improvements by the Landlord and acceptance by the County.

- A modified full-service gross lease whereby the Landlord is responsible for operational and building maintenance of the facility. The County is responsible for janitorial and electricity expenses.

- A non-reimbursable base TI allowance of $56,168, i.e., $8 per square foot included in the base rent.

- A reimbursable TI allowance of $562,130, i.e., $75 per square foot.

- Cancellation provision allowing the County to cancel any time after the 60th month, with 180 days prior written notice.

- Two 5-year options to extend the lease at the same terms and conditions with 60 days prior written notice by the Chief Executive Office (CEO).

- Annual Consumer Price Index (CPI) rental increases capped at 4 percent per annum commencing on the 13th month of the extended term.

The CEO, Real Estate Division staff conducted a survey within the service area to determine the availability of comparable and more economical sites. Staff was unable to identify any sites in the surveyed area that could accommodate this requirement more economically, nor are there any County-owned or leased facilities available for this program. Based upon said survey, staff has established that the rental range for similar office space and a similar lease structure is between $28 and $33 per square foot per year, therefore, the annual rent of $31.56 per square foot per year modified full-service gross for the proposed lease amendment represents a rate within market range for the area.

Attachment C shows County-owned or leased facilities in the proximity of the service area, and there are no suitable County-owned or leased facilities available for the program. Construction of the TIs will be completed in compliance with building codes and the Americans with Disabilities Act.

Notification letters advising of the proposed lease have been sent to the County of Los Angeles pursuant to Government Code Sections 25351 and 65402.

ENVIRONMENTAL DOCUMENTATION

The CEO has concluded that this lease is exempt from California Environmental Quality Act (CEQA) as specified in Class 1 of the Environmental Document Reporting Procedures and Guidelines adopted by the Board, and Section 15301 of the State CEQA Guidelines (Existing Facilities).

IMPACT ON CURRENT SERVICES (OR PROJECTS)

The proposed lease will provide the necessary office space for this County requirement. DMH concurs with the proposed recommendation.

CONCLUSION

It is requested that the Executive Office, Board of Supervisors return three originals of the executed lease, two certified copies of the Minute Order, and the adopted, stamped Board letter to the CEO, Real Estate Division at 222 South Hill Street, 4th Floor, Los Angeles, CA 90012 for further processing.

Respectfully submitted,

WILLIAM T FUJIOKA
Chief Executive Officer

WTF:RLR:CMM
CEM:MC:gw

Enclosures

c: Executive Office, Board of Supervisors
County Counsel
Auditor-Controller
Internal Services
Mental Health

ATTACHMENT A

DEPARTMENT OF MENTAL HEALTH
21730-32 SOUTH VERMONT AVENUE, SUITES 122 AND 210, LOS ANGELES
Asset Management Principles Compliance Form[1]

			Yes	No	N/A
1.	**Occupancy**				
	A	Does lease consolidate administrative functions?[2]			**X**
	B	Does lease co-locate with other functions to better serve clients? [2]			**X**
	C	Does this lease centralize business support functions?[2]			**X**
	D	Does this lease meet the guideline of 200 sq. ft. of space per person?[2]. **No, 260 sq. ft. of space per person due to clinical space for services to clients.**		**X**	
2.	**Capital**				
	A	Is it a substantial net County cost (NCC) program?		**X**	
	B	Is this a long term County program?	**X**		
	C	If yes to 2 A or B; is it a capital lease or an operating lease with an option to buy?		**X**	
	D	If no, are there any suitable County-owned facilities available?		**X**	
	E	If yes, why is lease being recommended over occupancy in County-owned space?			**X**
	F	Is Building Description Report attached as Attachment C?	**X**		
	G	Was build-to-suit or capital project considered?		**X**	
3.	**Portfolio Management**				
	A	Did department utilize CEO Space Request Evaluation (SRE)?	**X**		
	B	Was the space need justified?	**X**		
	C	If a renewal lease, was co-location with other County departments considered?			**X**
	D	Why was this program not co-located?			
		1. ____ The program clientele requires a "stand alone" facility**.**			
		2. ____ No suitable County occupied properties in project area.			
		3**.** **_X_** No County-owned facilities available for the project.			
		4. ____ Could not get City clearance or approval.			
		5. ____ The Program is being co-located.			
	E	Is lease a full service lease?[2]		**X**	
	F	Has growth projection been considered in space request?			**X**
	G	Has the Dept. of Public Works completed seismic review/approval?			**X**
		[1]As approved by the Board of Supervisors 11/17/98.			
		[2]If not, why not?			

ATTACHMENT B

FISCAL IMPACT/FINANCING
OVERVIEW OF THE LEASE COSTS

Proposed Lease	**21730 South Vermont Avenue, Suite 122, Torrance and 21732 South Vermont Avenue, Suite 210, Torrance**
Area (Square Feet)	7,021 rentable square feet
Term (years)	Eight-years, commencing upon Board approval and County's acceptance of the TI.
Annual Base Rent	$221,583 ($31.56 per sq. ft. annually)
Maximum TI Reimbursement [(1)]	$562,130 via progress payments when predetermined construction milestones are completed
Base TI Allowance	$56,168 ($8 per sq. ft. included in the base rent)
Additional TI Allowance	$527,025 ($75 per sq. ft.)
Change Order Allowance	$ 35,105 ($5 per sq. ft.)
Cancellation	Any time after the 60th month upon 180 days prior written notice
Parking Spaces	24
Options to Renew	Two 5-year options
Rental adjustment	Annual CPI increases capped at 4 percent per annum

(1) $562,130 represents the maximum amount of reimbursable TI funds available for this project payable via lump sum payments when predetermined construction milestones are completed.

ATTACHMENT C

DEPARTMENT OF MENTAL HEALTH
SPACE SEARCH WITHIN A ONE-MILE PARAMETER OF
21732 SOUTH VERMONT AVENUE, TORRANCE

Laco	Facilty Name	Address	Ownership	Gross SQFT	Net SQFT	Available SQFT
A150	DMH-WELLNESS CENTER	21732 S VERMONT AVE SUITE 210, TORRANCE 90502-2109	LEASED	1,817	1,726	NONE
2054	HARBOR-PUBLIC HEALTH PROGRAMS BLDG N-22	1000 W CARSON ST, TORRANCE 90502	OWNED	2,650	2,120	NONE
2061	HARBOR-MEDICAL RECORDS BLDG N-6	1000 W CARSON ST, TORRANCE 90502	OWNED	2,257	1,824	NONE
2063	HARBOR-REI ADMINISTRATION BUILDING N-14	1124 W CARSON ST, TORRANCE 90502	OWNED	11,802	8,829	NONE
2093	HARBOR-REI MEDICINE OFFICES E-2	1000 W CARSON ST, TORRANCE 90502	OWNED	4,007	3,611	NONE
2095	HARBOR-REI PEDIATRICS/ EMERGENCY MEDICINE E-4	1000 W CARSON ST, TORRANCE 90502	OWNED	10,051	7,219	NONE
2101	HARBOR-HOSPITAL PLANNING & ARCH/MECHANICAL F4	1000 W CARSON ST, TORRANCE 90502	OWNED	5,804	5,544	NONE
2114	HARBOR-COUNTY TRANSPORTATION OFFICE H-1	1000 W CARSON ST, TORRANCE 90502	OWNED	830	670	NONE
2127	HARBOR-WOMEN'S HEALTHCARE PROGRAMS BLDG N-35	1000 W CARSON ST, TORRANCE 90502	OWNED	1,535	1,192	NONE
2869	HARBOR-MEDICAL RECORDS OFFICE F-8	1000 W CARSON ST, TORRANCE 90502	OWNED	4,040	2,836	NONE
2870	HARBOR-REI NEUROLOGY BUILDING F-9	1000 W CARSON ST, TORRANCE 90502	OWNED	5,184	3,863	NONE
2958	DHS-CHILD HEALTH DISABILITY & PREVENTION N-34	1000 W CARSON ST, TORRANCE 90502	OWNED	1,125	874	NONE
2963	HARBOR-DHS-CHDP OFFICE COTTAGE #14	1000 W CARSON ST, TORRANCE 90502	OWNED	875	678	NONE
2964	HARBOR-NURSING (HOME HEALTH CARE) COTTAGE #16	1000 W CARSON ST, TORRANCE 90502	OWNED	875	678	NONE
2965	HARBOR-PEDIATRICS COTTAGE #18	1000 W CARSON ST, TORRANCE 90502	OWNED	875	678	NONE
T529	HARBOR-PAYROLL TRAILER L-4	1000 W CARSON ST, TORRANCE 90502	OWNED	2,160	1,423	NONE
T530	HARBOR-HUMAN RESOURCES TRAILERS L-2 & L-3	1000 W CARSON ST, TORRANCE 90502	OWNED	1,034	872	NONE
T531	HARBOR-PATIENT FINANCIAL SERVICES 3-SOUTH	1000 W CARSON ST, TORRANCE 90502	OWNED	12,240	9,936	NONE
T606	HARBOR-ENVIRONMENTAL HEALTH & SAFETY BLD N-32	1000 W CARSON ST, TORRANCE 90502	OWNED	3,600	3,144	NONE
X904	HARBOR-REI EMERGENCY MEDICINE OFFICE N-7	1000 W CARSON ST, TORRANCE 90502	OWNED	1,011	672	NONE
X907	HARBOR-NURSING PRACTICE AFFAIRS BUILDING N-18	1000 W CARSON ST, TORRANCE 90502	OWNED	2,160	1,586	NONE
Y737	HARBOR-AF PARLOW HEALTH LIBRARY	1000 W CARSON ST, TORRANCE 90502	OWNED	22,846	20,003	NONE
6499	HARBOR-PROFESSIONAL BUILDING (MFI)	21840 S NORMANDIE AVE, TORRANCE 90502	OWNED	37,297	35,432	NONE
5861	PUBLIC LIBRARY-CARSON LIBRARY	151 E CARSON ST, CARSON 90745	OWNED	33,112	27,001	NONE
A074	CSSD-DIVISION V HDQTERS/ TORRANCE HEALTH CTR	20221 S HAMILTON ST, TORRANCE 90502-1321	LEASED	66,825	54,835	NONE
A389	PW-INC CITY OFFICE/AREA 1 FIRE PREVENTION OFF	701 E CARSON ST, CARSON 90745	GRATIS USE	2,439	2,439	NONE
T523	SHERIFF-CARSON STATION TRAILER-SSGU	21356 S AVALON BLVD, CARSON 90745	OWNED	612	551	NONE
T525	SHERIFF-CARSON STATION TRAILER-MCAD	21356 S AVALON BLVD, CARSON 90745	OWNED	672	605	NONE
A768	DC&FS-CHILDREN'S ADVOCACY CTR-CARSON HIGH	22328 S MAIN ST, CARSON 90745	GRATIS USE	0	0	NONE
A646	MENTAL HEALTH-TIES	21081 S WESTERN AVE, TORRANCE 90501	LEASED	6,053	5,751	NONE

COUNTY OF LOS ANGELES

CHIEF EXECUTIVE OFFICE

LEASE AGREEMENT

DEPARTMENT: MENTAL HEALTH, as Tenant

LANDLORD: HONG KONG GARDEN, INC

78234

21732 SOUTH VERMONT AVENUE, SUITE 210 AND
21730 SOUTH VERMONT SUITE 122
TORRANCE, CALIFORNIA

TABLE OF CONTENTS

Page

1. BASIC LEASE INFORMATION 1

(a) Landlord's Address for Notice: 1

(b) Tenant's Address for Notice: 1

(c) Premises: 1

(d) Building: 1

(e) Term: 2

(f) Projected Commencement Date: 2

(g) Commencement Date: 2

(h) Irrevocable Offer Expiration Date: 2

(i) Basic Rent: 2

(j) Early Termination Notice Date: 2

(k) Rentable Square Feet in the Premises: 2

(l) Use: 2

(m) Initial Departmental Use: 3

(n) Parking Spaces: 3

(o) Normal Working Hours: 3

(p) Asbestos Report: 3

1.2 Defined Terms Relating to Landlord's Work Letter 3

(a) Base Tenant Improvement Allowance 3

(b) Additional Tenant Improvement Allowance 3

(c) Maximum Change Order Allowance 3

(d) Additional Tenant Improvement and Change Order Amortization Rate: 3

(e) Basic Rent Reduction 3

(f) Tenant's Work Letter Representative 3

(g) Landlord's Work Letter Representative 3

(h) Landlord's Address for Work Letter Notice 3

(i) Tenant's Address for Workletter Notice 3

1.3 Exhibits to Lease: 4

1.4 Landlord's Work Letter: 4

1.5 Supplemental Lease Documents: 4

2. PREMISES 4

3. COMMON AREAS 5

4. COMMENCEMENT AND EXPIRATION DATES 5

5. RENT 6

6. USES 7

7. HOLDOVER 7

8. COMPLIANCE WITH LAW 7

9. DAMAGE OR DESTRUCTION 7

10. REPAIRS AND MAINTENANCE. 8

11. SERVICES AND UTILITIES. 9

(a) HVAC 10

(b) Electricity 10

(c) Elevators 10

(d) Water 10

(e) Janitorial 10

(f) Access 10

12. LANDLORD ACCESS 10

13. TENANT DEFAULT. 10

14. LANDLORD DEFAULT. 10

(a) Remedies 11

(b) Waiver 11

(c) Emergency 11

15. ASSIGNMENT AND SUBLETTING 11
16. ALTERATIONS AND ADDITIONS 12
17. CONDEMNATION. 12
18. INDEMNIFICATION 13
19. INSURANCE 13
20. PARKING. 15
21. ENVIRONMENTAL MATTERS 15
22. ESTOPPEL CERTIFICATES 16
23. TENANT IMPROVEMENTS 16
24. LIENS 16
25. SUBORDINATION AND MORTGAGES 16
26. SURRENDER OF POSSESSION 17
27. SIGNAGE 17
28. QUIET ENJOYMENT 17
29. GENERAL 17
30. AUTHORITY 19
31. ACKNOWLEDGEMENT BY LANDLORD 19
32. IRREVOCABLE OFFER 21
33. OPTION TO EXTEND 21

COUNTY OF LOS ANGELES

CHIEF EXECUTIVE OFFICE

LEASE AGREEMENT

THIS LEASE is entered into as of the 8th day of July, 2014 between HONG KONG GARDEN, INC, a California corporation ("Landlord"), and COUNTY OF LOS ANGELES, a body politic and corporate ("Tenant" or "County").

Landlord and Tenant agree:

1. BASIC LEASE INFORMATION. The following terms as used herein shall have the meanings provided in this Section 1, unless otherwise specifically modified by provisions of this Lease.

1.1 Defined Terms Relating to the Lease:

(a) Landlord's Address for Notice:	Hong Kong Garden, Inc. 21717 South Vermont Avenue Torrance, CA 90502
(b) Tenant's Address for Notice:	Board of Supervisors Kenneth Hahn Hall of Administration, Room 383 500 West Temple Street Los Angeles, California 90012 With a copy to: Chief Executive Office Real Estate Division 222 South Hill Street, 3rd Floor Los Angeles, California 90012 Attention: Director of Real Estate Fax Number: (213) 217-4971
(c) Premises:	Premises A (Wellness Center): Approximately 3,511 rentable square feet in the Building (defined below) in the space known as Suite 210 as shown on Exhibit A attached hereto. Premises B (Tele-Mental Health Clinical Hub): Approximately 3,510 square feet in the Building (defined below) in the space known as Suite 122 inclusive of suites 121-124 as shown on Exhibit A attached hereto.
(d) Building:	The buildings located at 21732 South Vermont Avenue, Torrance as Premises A and 21730 South Vermont, Torrance as Premises B, which are located upon the real property described more particularly in Exhibit B

78234

	attached hereto (the "Property");
(e) Term:	Eight (8) years commencing Tenant's Acceptance of the Premises as defined in Section 4(a) (the "Commencement Date"); and terminating at midnight on the day before the 8th anniversary of the Commencement Date (the "Termination Date"), subject to earlier termination by Tenant as provided herein. The phrase "Term of this Lease" or "the Term hereof" as used in this Lease, or words of similar import, shall refer to the initial Term of this Lease together with any additional Extension Term for which an option has been validly exercised.
(f) Projected Commencement Date:	August 1, 2014
(g) Irrevocable Offer Expiration Date:	June 1, 2014
(h) Premises Basic Rent:	$9,233.93 per month (which is based upon a rental rate of $2.63 per rentable square foot (adjustable only as provided in Sections 2(b) and 5 hereof.) $9,231.30 per month (which is based upon a rental rate of $2.63 per rentable square foot (adjustable only as provided in Sections 2(b) and 5 hereof.) Premises A and B rent shall be combined in one initial monthly payment of $18,465.23(Base Rent).
(i) Early Termination Notice Date:	At any time after the 60th month.
(j) Rentable Square Feet in the Premises:	7,021 office space.
(k) Use:	General office use, or for any other lawful purposes not incompatible with or in violation of any restrictions or exclusives of other tenants in the Building.
(l) Initial Departmental Use:	Mental Health

AC

(m) Parking Spaces:	Twenty-four (24) non-exclusive parking spaces in the Building.
(n) Normal Working Hours:	7:00 a.m. to 7:00 p.m., Monday through Friday and 9:00 a.m. to 2:00 p.m. Saturday, except New Year's Day, President's Day, Memorial Day, Independence Day, Labor Day, Thanksgiving Day, Christmas Day (on the days such holidays are generally observed) and such other holidays as are generally recognized by the County of Los Angeles, California.
(o) Asbestos Report:	Intentionally Omitted.

1.2 Defined Terms Relating to Landlord's Work Letter:

(a) Base Tenant Improvement Allowance:	$56,168 ($8 per RSF)
(b) Additional Tenant Improvement Allowance:	$527,025($75 per RSF)
(c) Maximum Change Order Allowance:	$35,105 ($5 per RSF)
(d) Additional Tenant Improvement and Change Order Amortization Rate:	N/A
(e) Basic Rent Reduction:	N/A
(f) Tenant's Work Letter Representative:	Miguel Covarrubias or an assigned staff person of the Chief executive Office-Real Estate Division.
(g) Landlord's Work Letter Representative:	An assigned representative of the Landlord.
(h) Landlord's Address for Work Letter Notice:	See Section 1.1(a)
(i) Tenant's Address for Workletter Notice:	Board of Supervisors Kenneth Hahn Hall of Administration, Room 383 500 West Temple Street Los Angeles, California 90012

RC

With a copy to:
Chief Executive Office
Real Estate Division
222 South Hill Street, 3rd Floor
Los Angeles, California 90012
Attention: Director of Real Estate
Fax Number: (213) 217-4971

1.3 Exhibits to Lease:

Exhibit A - Floor Plan of Premises
Exhibit B- Legal Description of Property
Exhibit C - Commencement Date Memorandum and Confirmation of Lease Terms
Exhibit D - HVAC Standards
Exhibit E - Cleaning and Maintenance Schedule

1.4 Landlord's Work Letter: (Executed concurrently with this Lease and made a part hereof by this reference):

Landlord's Work Letter
Addendum A: Base Building Improvements
Addendum B: Tenant Improvements

1.5 Supplemental Lease Documents: (Delivered to Landlord and made a part hereof by this reference):

Document I: Subordination, Non-disturbance and Attornment Agreement
Document II: Tenant Estoppel Certificate
Document III: Community Business Enterprises Form
Document IV: Memorandum of Lease
Document V: Request for Notice

2. PREMISES

(a) Landlord does hereby lease to Tenant, and Tenant does hereby lease from Landlord, upon the terms and conditions herein set forth, the Premises described in Section 1 and Exhibit A attached hereto.

(b) Tenant shall have the right within ninety (90) days of approval of this Lease by the Board of Supervisors of the County of Los Angeles ("Board of Supervisors") to field-measure and verify the exact footage of the Premises and/or the Building. All measurements shall be taken in accordance with the methods of measuring rentable/usable area as described in the Standard Method for Measuring Floor Area in Office Buildings, ANSI Z65.1-1996, as promulgated by the Building Owners and Management Association ("BOMA") International except that no penthouse mechanical room space shall be included in the measurement. Should this measurement be less than the square footage stated above, Tenant shall have the right to adjust such square footage and reduce the Basic Rent in Section 1 accomplished by the mutual execution of a memorandum of understanding between the Landlord and the Tenant. Landlord acknowledges the space has been marketed at the above-indicated rental amount and in the event of subsequent physical measurements, Landlord agrees there will be no adjustment made to either the square footage or the Basic Rent in the event the measured square footage exceeds the amount represented by Landlord. Should Landlord and Tenant not agree with respect to the results of the measurement conducted pursuant to this subsection (b) Landlord shall appoint an independent firm or person who is experienced in making such measurements whose determination with respect to which measurement is correct shall be final and binding upon the parties. Landlord and Tenant shall share equally in the fees of such firm.

RC

3. COMMON AREAS. Tenant may use the following areas ("Common Areas") in common and non-exclusively with Landlord and other tenants of the Building: the entrances, lobbies and other public areas of the Building, walkways, landscaped areas, driveways necessary for access to the Premises, parking areas and other common facilities designated by Landlord from time to time for common use of all tenants of the Building. Tenant shall comply with all reasonable, non-discriminatory rules and regulations regarding the use of the Common Areas established by Landlord.

4. COMMENCEMENT AND EXPIRATION DATES

(a) Term. The term of this Lease shall commence upon the Commencement Date and terminate on the Termination Date. Within thirty (30) days of determining the Commencement Date, Landlord and Tenant shall acknowledge in writing the Commencement Date by executing the Commencement Date Memorandum and Confirmation of Lease Terms attached as Exhibit C. The Commencement Date shall begin thirty (30) days after Tenant's Acceptance of the Premises. The term "Tenant's Acceptance of the Premises" as used in this Lease shall mean the date upon which the Premises are Substantially Complete, Tenant has inspected the Premises and Tenant has accepted the Premises. The term "Substantially Complete" or "Substantial Completion" as used in this Lease shall mean compliance with all of the following: (1) the shell and core of the Building are complete and in compliance with all applicable laws and codes, and all of the building systems are operational to the extent necessary to service the Premises; (2) Landlord has sufficiently completed all the work required to be performed by Landlord in accordance with this Lease, including the installation of modular furniture systems, if so required (except minor punch list items which Landlord shall thereafter promptly complete), such that Tenant can conduct normal business operations from the Premises; (3) Landlord has obtained a certificate of occupancy for the Building, or a temporary certificate of occupancy for that portion of the Building that includes all of the Premises, or its equivalent; (4) Tenant has been provided with the number of parking privileges and non-exclusive spaces to which it is entitled under this Lease; and (5) if Landlord is responsible for the installation of telecommunication systems, then such systems shall be completely operational.

(b) Termination Right. If the Commencement Date has not occurred within sixty (60) days from the Projected Commencement Date, subject to Tenant Delays or Force Majeure Delays as provided in Landlord's Work Letter, which has been executed concurrently herewith, Tenant may thereafter, at any time before the Commencement Date occurs, terminate this Lease effective upon the giving of written notice to Landlord and the parties shall have no further obligations to one another hereunder.

(c) Early Possession. Tenant shall be entitled to possession of the Premises not less than thirty (30) days prior to the Commencement Date for the purpose of installing Tenant's furniture, fixtures and equipment in the Premises. Such early occupancy shall be subject to all provisions hereof but shall not advance the Termination Date, and Tenant shall not pay Basic Rent for such early occupancy period. Such early possession shall also not impede or materially impact Landlord's ability to complete its work in the Premises.

AC

(d) Early Termination. Tenant shall have the right to terminate this Lease at any time after the Early Termination Notice Date, as defined in Section 1, by giving Landlord not less than one hundred eighty (180) days prior written notice executed by the Chief Executive Officer of Tenant. In the event of such election to early termination of the Lease, Tenant shall be responsible for reimbursement to Lanldord of (i) the unamortized portion of the Tenant Improvement Allowance provided by Landlord to Tenant under Sections 1.2(a) and (b), to be amortized by Tenant over a five (5) year period from the Commencement Date, and (ii) the unamortized portion of the Commission paid by Landlord to brokers involved in the placement of this Lease, to be amortized over a five (5) year period from the Commencement Date, with the amount payable, if any, by Tenant to Landlord at the effective termination date of the Lease.

5. RENT. Tenant shall pay Landlord the Base Rent stated in Section 1 during the Term hereof within fifteen (15) days after a claim therefor for each such month has been filed by Landlord with the Auditor of the County of Los Angeles (the "County") prior to the first day of each month. Base Rent for any partial month shall be prorated in proportion to the number of days in such month.

All amounts owed pursuant to this Lease, including but not limited to Additional Tenant Improvement Allowance and Charge Orders, shall be consider Rent hereunder.

Beyond year 1 of the Term, the rental rate shall be adjusted as defined herein:

(a) Rental Adjustment: For each successive twelve (12) months of the original Term of this Lease and in the event Tenant exercises its Option pursuant to Section 33 hereof for each successive twelve (12) month period thereafter, the annual rental as set forth in Paragraph 1.1 hereof shall be subject to adjustment. From and after the first anniversary date of the first day of the first full calendar month following the commencement of this Lease and every twelve months thereafter, the rent shall be adjusted in accordance with the CPI formula set forth in this Section 5. The "Base Index" shall be the Index published for the month the lease commences.

(b) CPI Formula: The method for computing the annual rental adjustment shall be by reference to the Consumer Price Index for all Urban Consumers for the Los Angeles-Anaheim-Riverside area, all items published by the United States Department of Labor, Bureau of Labor Statistics (1982-84 = 100), herein referred to as the "Index".

The rental adjustment for the Base Rent for the first anniversary of the Lease Term shall be calculated by multiplying the Landlord's Initial Base Rent of $18,465.23 by a fraction, the numerator being the New Index and the denominator being the Base Index. The New Index is the Index published for the third (3rd) month immediately preceding the month the adjustment is to be effective, and the Base Index is the Index published for the month the Lease commences. Then, on all subsequent years' anniversaries, the rental adjustment for Basic Rent shall be calculated by multiplying the prior year's Adjusted Base Rent, by a fraction, the numerator being the New Index and the denominator being the prior year's Index.

The formula shall be illustrated as follows:

First Anniversary Lease Year's calculation

(New Index ÷ Base Index) X $18,465.23 (Initial Base Rent) = New Adjusted Base Rent

Each Lease Year's Anniversary Thereafter:

AC

(New Index ÷ Prior Year's Index) X Prior Year's Adjust Base Rent = New Adjusted Base Rent

If the Index is changed so that the base year of the Index differs from that used as of the Commencement Date of the Lease, the Index shall be converted in accordance with the conversion factor published by the United State Department of Labor, Bureau of Labor Statistics. If the Index is discontinued or revised during the Term of this Lease, such other governmental Index or computation with which it is replaced shall be used in order to obtain substantially the same result as would be obtained if the Index had not been discontinued or revised. In the event the parties are unable to agree upon a substitute index (if the original Index is discontinued without a replacement) then upon demand by either party, the matter shall be submitted to arbitration for the purpose of determining an alternate method of computing the rent adjustment based upon the increase in the cost of living.

(c) General Provisions:

(i) In no event shall the annual rent adjustment based upon the CPI formula result in an annual increase greater than four percent (4%) per year of the New Adjusted Base Rent.

(i) In no event shall the New Adjusted Base Rent be adjusted by the CPI formula to result in a lower annual rent than was payable during the previous year of the Lease.

6. USES. The Premises are to be used only for the uses set forth in Section 1 and for no other business or purpose; however, Landlord shall not unreasonably withhold its consent to a change of use so long as the proposed use does not violate an exclusive or restriction held by another tenant in the Property at the time of the proposed change in use.

7. HOLDOVER. If Tenant remains in possession of the Premises or any part thereof after the expiration of the Term of this Lease, such occupancy shall be a tenancy which is terminable only upon ninety (90) days written notice from Landlord or thirty (30) days written notice from the Chief Executive Officer of Tenant at the last monthly Basic Rent payable under this Lease (as such Basic Rent may be adjusted from time to time in accordance with this Lease) plus all other charges payable under this Lease, and subject to all of the terms, covenants and conditions of this Lease.

8. COMPLIANCE WITH LAW. Tenant shall, at Tenant's expense, comply promptly with all applicable statutes, ordinances, rules, regulations, orders and requirements in effect during the term hereof, regulating the use, occupancy or improvement of the Premises by Tenant. Landlord, not Tenant, shall, at its sole cost, at all times cause the Building, to comply with all applicable statutes, ordinances, rules, regulations, orders and requirements in effect and binding upon Tenant or Landlord during the term hereof, including without limitation, the Americans with Disabilities Act, except to the extent such compliance is made necessary as a result of Tenant's particular use of or alterations or improvements to the Premises.

9. DAMAGE OR DESTRUCTION.

(a) Damage. In the event any portion of the Premises is damaged by fire or any other cause rendering the Premises totally or partially inaccessible or unusable and the Premises may be restored to a complete architectural unit of the same value, condition and character that

AC

existed immediately prior to such casualty in less than one hundred eighty (180) days, then Landlord shall promptly, at Landlord's expense, repair such damage and this Lease shall continue in full force and effect. If all or any portion of the Premises shall be made untenantable by fire or other casualty, Landlord shall immediately secure the area to prevent injury to persons and/or vandalism to the improvements. Landlord shall promptly, but in any event within ten (10) days, cause an architect or general contractor selected by Landlord to provide Landlord and Tenant with a written estimate of the amount of time required to substantially complete the repair and restoration of the Premises and make the Premises tenantable again using standard working methods. The failure to do so shall be a material default hereunder. Basic Rent shall abate to the extent that the Premises are unusable by Tenant. Tenant waives the provisions of California Civil Code Sections 1932(2) and 1933(4) with respect to any partial or total destruction of the Premises.

(b) Tenant Termination Right. In the event any portion of the Premises is damaged by fire or any other cause rendering the Premises totally or partially inaccessible or unusable and the Premises will not be restored to a complete architectural unit of the same value, condition and character that existed immediately prior to such casualty in less than one hundred eighty (180) days for any reason, then Tenant may terminate this Lease by giving written notice within ten (10) days after notice from Landlord specifying such time period of repair; and this Lease shall terminate and the Basic Rent shall be abated from the date the Premises became untenantable. In the event that Tenant does not elect to terminate this Lease, Landlord shall promptly commence and diligently prosecute to completion the repairs to the Building or Premises.

(c) Damage In Last Year. Notwithstanding the foregoing provisions, if any material destruction to the Premises occurs during the last year of the Term, either Landlord or Tenant may terminate this Lease by giving notice to the other not more than thirty (30) days after such destruction, in which case (a) Landlord shall have no obligation to restore the Premises, (b) Landlord may retain all insurance proceeds relating to such destruction, and (c) this Lease shall terminate as of the date which is thirty (30) days after such written notice of termination.

(d) Default By Landlord. If Landlord is required to repair and restore the Premises as provided for in this Section and Landlord should fail to thereafter pursue said repair and restoration work with reasonable diligence to completion, Tenant may (a) declare a default hereunder, or (b) perform or cause to be performed the restoration work and deduct the cost thereof plus interest thereon at ten percent (10%) per annum, from the Basic Rent next due as a charge against the Landlord.

10. REPAIRS AND MAINTENANCE.

(b) (a) Landlord Representations. Landlord represents to Landlord's knowledge to Tenant that (i) the Premises, the Building and all Common Areas, (including electrical, heating, ventilating and air conditioning ("HVAC"), mechanical, plumbing, gas and fire/life safety systems in the Building and similar building service systems) comply with all current laws, codes, and ordinances, including use the Americans With Disabilities Act; and are in reasonable good working order and condition; (ii) the Building and Premises comply with all covenants, conditions, restrictions and underwriter's requirements; (iii) the Premises, Building and Common Areas are free of the presence of any Hazardous Materials (as hereinafter defined);

AC

and (iv) Landlord has not received any notice from any governmental agency that the Building or the Premises are in violation of any law or regulation. Landlord represents, that the Premises and the Building contain no asbestos containing materials. Landlord Obligations. Landlord shall keep and maintain in good repair and working order and promptly make repairs to and perform maintenance upon and replace as needed: (i) the structural elements of the Building, including without limitation, all permanent exterior and interior walls, floors and ceilings, roof, concealed plumbing, stairways, concealed electrical systems and telephone intrabuilding network cable (ii) mechanical (including HVAC), electrical, plumbing and fire/life safety systems serving the Building (iii) the Common Areas; (iv) exterior windows of the Building; and (v) elevators serving the Building. Landlord, at its sole cost and expense, shall also perform all maintenance and repairs to the Premises, and shall keep the Premises in good condition and repair, reasonable wear and tear excepted. Landlord's repair obligations include, without limitation, repairs to: (1) the floor covering (if such floor covering is carpeting it shall be replaced as needed but not less often than after five years of use); (2) interior partitions; (3) doors; (4) the interior side of demising walls (which shall be repainted as needed but not less often than every five (5) years); and (5) signage.

(c) Tenant Obligations. Without limiting Landlord's Obligations, Tenant shall, at Tenant's sole expense, be responsible for the cost of repairing any area damaged by Tenant or Tenant's agents, employees, invitees and visitors and the repair of low voltage electronic, phone and data cabling and related equipment that is installed by or for the exclusive benefit of Tenant. All repairs and replacements shall: (a) be made and performed by contractors or mechanics approved by Tenant, which consent shall not be unreasonably withheld or delayed; (b) be at least equal in quality, value and utility to the original work or installation; and (c) be in accordance with all laws.

(d) Tenant's Right to Repair. If Tenant provides written notice (or oral notice in the event of an emergency such as damage or destruction to or of any portion of the Building structure and/or the Building systems and/or anything that could cause material disruption to Tenant's business) to Landlord of an event or circumstance which requires the action of Landlord with respect to repair and/or maintenance, and Landlord fails to provide such action within a reasonable period of time, given the circumstances, after the giving of such notice, but in any event not later than five (5) days after the giving of such notice, then Tenant may proceed to take the required action (provided, however, that no such notice shall be required in the event of an emergency which threatens life or where there is imminent danger to property or a possibility that a failure to take immediate action could cause a material disruption in Tenant's normal and customary business activities). Tenant shall have access to the Building to the extent necessary to perform the work contemplated by this provision. If such action was required under the terms of this Lease to have been taken by Landlord and was not taken by Landlord within such period (unless such notice was not required as provided above), and Tenant took such required action, then Tenant shall be entitled to prompt reimbursement by Landlord of Tenant's reasonable costs and expenses in having taken such action plus interest thereon at ten percent (10%) per annum. If not reimbursed by Landlord within ten (10) days, Tenant shall be entitled to deduct from Basic Rent payable by Tenant under this Lease the amount set forth in its invoice for such work. The remedies provided in this Section are in addition to the remedies provided in Section 14.

11. SERVICES AND UTILITIES.

Landlord shall furnish the following services and utilities to the Premises which utilities have or will be separately metered by the Landlord and shall be paid for by the Tenant:

(a) Heating, Ventilation and Air Conditioning. Landlord shall furnish heating, ventilation and air conditioning ("HVAC"), during Normal Working Hours in amounts required for the use and occupancy of the Premises for normal office purposes to a standard comparable to other first-class buildings and not less than the standard set forth in Exhibit D attached hereto.

(b) Electricity. Landlord shall furnish to the Premises the amount of electric current provided for in the Working Drawings (if applicable) but in any event not less than seven watts of electric current (connected load) per square foot of Rentable Square Feet in the Premises, for power and lighting and electric current for HVAC, and Landlord shall provide the existing or new transformers or subpanels on each floor of the Premises necessary for Tenant to utilize such capacity in the Premises. Tenant is responsible for electrical service costs.

(c) Elevators. Landlord shall furnish freight and passenger elevator services to the Premises during Normal Working Hours. During all other hours, Landlord shall furnish passenger elevator cab service in the elevator serving the Premises on an as needed basis, and, by prior arrangement with Landlord's building manager, freight elevator service.

(d) Water. Landlord shall make available water for normal lavatory and potable water meeting all applicable governmental standards for drinking purposes in the Premises.

(e) Janitorial. Tenant is responsible for janitorial service.

(f) Access. Landlord shall furnish to Tenant's employees and agents access to the Building, Premises and Common Areas on a seven (7) day per week, 24 hour per day basis, subject to compliance with such reasonable security measures as shall from time to time be in effect for the Building.

12. LANDLORD ACCESS. Tenant shall permit Landlord and its agents to enter the Premises upon prior written notice for the purpose of inspecting the Premises for any reasonable purpose. If Landlord temporarily closes any portion of the Building or Premises, Basic Rent shall be prorated based upon the percentage of the Premises or Building rendered untenantable and not used by Tenant. Landlord shall have the right at any and all times to enter the Premises in the event of an emergency.

13. TENANT DEFAULT.

(a) Default. The occurrence of any one or more of the following events (a "Tenant Default") shall constitute a material default and breach of this Lease by Tenant:

(i) The failure by Tenant to make any payment of Basic Rent or any other payment required to be made by Tenant hereunder (except to the extent an offset is expressly permitted hereunder), as and when due and if the failure continues for a period of ten (10) days after written notice to Tenant;

(ii) The failure by Tenant to observe or perform any of the other covenants, conditions or provisions of this Lease, where such failure shall continue for a period of thirty (30) days after written notice from Landlord specifying in detail the nature of the Tenant Default; provided, however, if more than thirty (30) days are reasonably required for its cure

AC

then Tenant shall not be deemed to be in default if Tenant commences such cure within said 30-day period and thereafter diligently prosecutes such cure to completion.

(b) Termination. Tenant agrees that if a Tenant Default should occur and should not be cured within the time periods set forth above, it shall be lawful for Landlord to terminate this Lease upon the giving of written notice to Tenant. In addition thereto, Landlord shall have such other rights or remedies as may be provided by law.

(c) No Effect on Indemnity. Nothing in this Article shall be deemed to affect either Landlord or Tenant's right to indemnification under any indemnification clause or clauses set forth in this Lease.

14. LANDLORD DEFAULT.

(a) Remedies. In addition to the provisions for Landlord's default provided by Sections 9(d), 10(c) 19 and 20(b), Landlord shall be in default ("Landlord Default") in the performance of any obligation required to be performed by Landlord under this Lease if Landlord has failed to perform such obligation within five days after the giving of written notice with respect thereto by Tenant (which notice shall be, if appropriate, the same notice given under Section 10(c)) ; provided, however, that if the nature of the Landlord Default is such that the same cannot reasonably be cured within such five (5) day period, Landlord shall not be deemed to be in Landlord Default if Landlord shall within such period commence such cure and thereafter diligently prosecute the same to completion. If the Landlord Default is of such a nature that it materially and substantially interferes with Tenant's occupancy and use of the Premises and if such Landlord Default is not cured within the foregoing cure period, then Tenant shall have the right, at its option, with or without further notice or demand of any kind to Landlord or any other person, to any one or more of the following described remedies in addition to all other rights and remedies provided at law or in equity or elsewhere herein: (i) to remedy such default or breach and deduct the costs thereof (including but not limited to attorneys' fees) plus interest at the rate of ten (10%) per annum from the installments of Basic Rent next falling due; (ii) to pursue the remedy of specific performance; (iii) to seek money damages for loss arising from Landlord's failure to discharge its obligations under this Lease or offset such damages against Basic Rent next coming due; and/or (iv) to terminate this Lease.

(b) Waiver. Nothing herein contained shall relieve Landlord from its duty to effect the repair, replacement, correction or maintenance required to restore any affected services, or to perform any other obligations to the standard prescribed in this Lease, nor shall this Section be construed to obligate Tenant to undertake any such work.

(c) Emergency. Notwithstanding the foregoing cure period, Tenant may cure any default without notice where the failure promptly to cure such default would, in the reasonable opinion of Tenant, create or allow to persist an emergency condition or materially and adversely affect the operation of Tenant's business in the Premises.

15. ASSIGNMENT AND SUBLETTING. N/A

AC

16. ALTERATIONS AND ADDITIONS.

(a) Landlord Consent. Tenant shall not make any structural alterations, improvements, additions, or utility installations in or about the Premises (collectively, "Alterations") without first obtaining the written consent of Landlord, which consent shall not be unreasonably withheld, conditioned or delayed. However, Landlord's consent shall not be required for any Alteration that satisfies all of the following criteria: (1) complies with all Laws; (2) is not visible from the exterior of the Premises or Building; (3) will not materially affect the systems or structure of the Building; and (4) does not unreasonably interfere with the normal and customary business office operations of other tenants in the Building. If Landlord fails to respond in writing within thirty (30) days of such request, Landlord shall be deemed to approve the Alterations.

(b) End of Term. Any Alterations not removed by Tenant shall become the property of Landlord and remain upon and be surrendered with the Premises at the expiration of the Term.

17. CONDEMNATION.

(a) Controlling Terms. If during the Term, or during the period of time between the execution of this Lease and the Commencement Date, there is any taking of all or any part of the Premises or any interest in this Lease by Condemnation (as defined below), this Section shall determine the rights and obligations of Tenant and Landlord. "Condemnation" shall mean the exercise of any governmental power to take title to any portion of the Premises, whether by legal proceedings or otherwise, by a Condemnor (as defined below) or a voluntary sale or transfer by Landlord to any Condemnor, either under threat of a Condemnor's exercise of such power or while legal proceedings are pending for the exercise of such power. "Condemnor" shall mean any public or quasi-public authority, or private corporation or individual, having the power of Condemnation.

(b) Total Taking. If the Premises are totally taken by Condemnation, this Lease shall terminate on the date the Condemnor has a right to possession of the Premises (the "Date of Taking").

(c) Partial Taking. If any portion, but not all, of the Premises is taken by Condemnation, this Lease shall remain in effect, except that Tenant may elect to terminate this Lease if, in Tenant's reasonable judgment, the remaining portion of the Premises (including the space available for parking) is rendered unsuitable for Tenant's continued use of the Premises. If Tenant elects to so terminate this Lease, Tenant must exercise its right to terminate by giving notice to Landlord within thirty (30) days after the date that the nature and the extent of the Condemnation have been determined (the "Determination Date"), which notice shall set forth the date of termination. Such termination date shall not be earlier than thirty (30) days nor later than ninety (90) days after Tenant has notified Landlord of its election to terminate; except that this Lease shall terminate on the Date of Taking if the Date of Taking falls on a date before the date of termination as designated by Tenant. If Tenant does not so notify Landlord within thirty (30) days after the Determination Date, all obligations of Tenant under this Lease shall remain in effect, except that Basic Rent shall be equitably abated.

(d) Restoration. Notwithstanding the preceding paragraph, if, within thirty (30) days after the Determination Date, Landlord notifies Tenant that Landlord at its cost will add to the remaining Premises so that the area of the Premises and the space available for parking, will be substantially the same after the Date of Taking as they were before the Date of Taking, and Landlord commences the restoration promptly and, subject to reasonable allowance for delays that are not caused by Landlord, completes it within ~~one hundred eighty (180)~~ ninety (90) days after Landlord so notifies Tenant, this Lease shall continue in effect. All obligations of Tenant under this Lease shall remain in effect, except that Basic Rent shall be equitably abated or reduced during the period from the Date of Taking until the completion of such restoration.

(e) Award. The Award (as defined below) shall be divided between Landlord and Tenant as their respective interests may appear. "Award" shall mean all compensation, sums or anything of value awarded, paid or received on a total or partial Condemnation of the Premises.

(f) Waiver of Statute. Landlord and Tenant hereby waive the provision of California Code of Civil Procedure Section 1265.130 allowing Landlord or Tenant to petition the superior court to terminate this Lease in the event of a partial taking of the Premises.

18. INDEMNIFICATION.

(a) Tenant's Indemnity. Tenant shall indemnify, defend and hold Landlord harmless from and against all loss, cost and expense, including attorneys' fees, arising from any injury or damage to any person or property, occurring in or about the Building or Premises as a result of any negligent act, omission or willful misconduct of Tenant or its employees, or arising from any breach or default under this Lease by Tenant. The foregoing provisions shall not be construed to make Tenant responsible for loss, damage, liability or expense resulting from injuries to third parties caused by the negligence or willful misconduct of Landlord, or its officers, contractors, licensees, agents, employees or invitees. Nothing in this Lease shall be construed to waive, limit, or supersede any of Tenant's rights or immunities under the California Labor Code, including but not limited to a waiver pursuant to section 3864 of the Labor Code.

(b) Landlord's Indemnity. Landlord shall indemnify, defend and hold Tenant harmless from and against all loss, cost and expense, including attorneys' fees, arising from any injury or damage to any person or property, occurring in or about the Building or Premises as a result of any negligent act, omission or willful misconduct of Landlord, or its officers, contractors, licensees, agents, employees, guests, or visitors, or arising from any breach or default under this Lease by Landlord. The foregoing provisions shall not be construed to make Landlord responsible for loss, damage, liability or expense resulting from injuries to third parties caused by the negligence or willful misconduct of Tenant, or its officers, contractors, licensees, agents, employees or invitees.

19. INSURANCE.

(a) Landlord's Insurance. During the term of this Lease, Landlord shall maintain the following insurance:

(i) Commercial property insurance which shall (1) cover damage to Landlord's property, including improvements and betterments, from perils covered by the causes-

RC

of-loss special form (ISO form CP 10 30), and include ordinance or law coverage (and coverage against acts of terrorism to the extent such coverage is reasonably available and priced at commercially reasonable rates); and (2) be written for full replacement cost of the property, with a deductible of no greater than ten percent (10%) of the property value. Landlord shall carry insurance on any furniture and furnishings which will become the property of Tenant at the expiration of the Term and on all modular furniture installed in the Premises. Insurance proceeds shall be payable to Landlord and Tenant as their interests may appear and be utilized for repair and restoration of the Premises.

(ii) General liability insurance (written on ISO policy form CG 00 01 or its equivalent) with limits of not less than the following: (1) per occurrence and general aggregate amount of Five Million Dollars ($5,000,000); (2) products/completed operations aggregate of Two Million Dollars ($2,000,000); and (3) personal and advertising injury of One Milllion Dollars ($1,000,000).

(iii) Failure by Landlord to maintain the insurance required by this Section and deliver evidence thereof as required by this Lease or to use any insurance proceeds to timely repair and restore the Premises shall constitute a material breach of this Lease.

(b) Tenant's Insurance. Tenant shall maintain, at Tenant's own cost throughout the Term: (i) commercial general liability insurance in the same amounts and with the same limits as required to be carried by Landlord under Section 19(a)(ii), and (ii) a policy of standard fire and extended coverage insurance on Tenant's personal property, which shall provide coverage of one hundred percent (100%) of the full replacement value.

(c) At the sole option of the Tenant, it may self-insure by self-funding any or all of its insurance obligation required under this Lease. It is understood that if Tenant elects to self-insure as permitted above, Landlord shall have the same benefits and protections as if Tenant carried insurance with a third party insurance company satisfying the requirements of this Lease, including without limitation, the waiver of subrogation provisions of paragraph 19(f) hereof, and such self-insurance shall not limit Tenant's indemnification obligations set forth in paragraph 18(a) hereof.

(d) Insurance Requirements. All insurance policies required to be maintained by Landlord under this Lease shall be issued by insurance companies which have a Best's Rating of "AVII" or better and which are qualified to do business in the State of California. All liability and property damage and other casualty policies of Landlord shall be written as primary policies, not contributing with, and not in excess of coverage which Tenant may carry.

(e) Certificates. Landlord shall deliver to Tenant on the Commencement Date of this Lease and thereafter at least fifteen (15) days prior to expiration of any insurance required to be carried hereunder, certificates of insurance evidencing this coverage with limits not less than those specified above. Certificates shall include the address of the leased premises and must document that each party has named the other as an additional insured (or its equivalent) on its general liability and property insurance policy, and that Tenant has been named a loss payee on Landlord's commercial property insurance policy, as required. Further, all certificates shall expressly provide that no less than thirty (30) days' prior written notice shall be given to Tenant in the event of material change to, expiration or cancellation of the coverages or policies evidenced by the certificates.

(f) Waiver of Subrogation. Landlord and Tenant each hereby waive their rights of subrogation against one another to the extent it is covered by the property insurance policies

AC

required to be carried hereunder. Landlord shall cause its insurance carriers to consent to the foregoing waiver of rights of subrogation against Tenant.

20. PARKING.

(a) Tenant's Rights. Tenant shall have the right to the number of non-exclusive reserved parking stalls set forth in Section 1 without charge for the Term of this Lease. No tandem parking shall be permitted and Tenant shall be entitled to full in/out privileges. Tenant's parking rights shall be subject to reasonable parking rules and regulations adopted by Landlord from time to time, including the right of Landlord designation of the location of the parking spaces to be used by Tenant, provided that such procedures shall be uniformly applied to all tenants. Tenant acknowledges that all other parking spaces are not for the exclusive use of tenants of the building, rather, all such parking spaces are to be used on a non-exclusive, first-come, first-served basis by Tenant and other tenants, occupants, licensees, invitees and permittees of the Building.

(b) Remedies. Landlord acknowledges that it is a material term of this Lease that Tenant receive all of the Parking Spaces to which it is entitled under this Lease for the entire Term of this Lease and that it would be impracticable and extremely difficult to fix the actual damages for a breach of such provisions. It is therefore agreed that if, for any reason whatsoever, a material number of the Parking Spaces required above are not available to Tenant, (in addition to the rights given to Tenant under Section 14 and Sections 9 and 17 in the event of casualty or condemnation) Tenant may (a) terminate this Lease by giving written notice of such termination to Landlord, which notice shall be effective 30 days thereafter or (b) deduct from the Basic Rent thereafter accruing hereunder an amount each month equal to the Basic Rent times the percentage of Parking Spaces not so provided times 1.5 but such deduction from Basic Rent shall be not less than ten percent (10%) nor more than one hundred percent (100%).

21. ENVIRONMENTAL MATTERS

(a) Hazardous Materials. Tenant shall not cause nor permit, nor allow any of Tenant's employees, agents, customers, visitors, invitees, licensees, contractors, assignees or subtenants to cause or permit, any Hazardous Materials to be brought upon, stored, manufactured, generated, blended, handled, recycled, treated, disposed or used on, under or about the Premises, the Building or the Common Areas, except for routine office and janitorial supplies in usual and customary quantities stored, used and disposed of in accordance with all applicable Environmental Laws. As used herein, "Hazardous Materials" means any chemical, substance, material, controlled substance, object, condition, waste, living organism or combination thereof, whether solid, semi solid, liquid or gaseous, which is or may be hazardous to human health or safety or to the environment due to its radioactivity, ignitability, corrosivity, reactivity, explosivity, toxicity, carcinogenicity, mutagenicity, phytotoxicity, infectiousness or other harmful or potentially harmful properties or effects, including, without limitation, molds, toxic levels of bacteria, tobacco smoke within the Premises, petroleum and petroleum products, asbestos, radon, polychlorinated biphenyls (PCBs), refrigerants (including those substances defined in the Environmental Protection Agency's "Refrigerant Recycling Rule," as amended from time to time) and all of those chemicals, substances, materials, controlled substances, objects, conditions, wastes, living organisms or combinations thereof which are now or become

AC

in the future listed, defined or regulated in any manner by any Environmental Law based upon, directly or indirectly, such properties or effects. As used herein, "Environmental Laws" means any and all federal, state or local environmental, health and/or safety-related laws, regulations, standards, decisions of courts, ordinances, rules, codes, orders, decrees, directives, guidelines, permits or permit conditions, currently existing and as amended, enacted, issued or adopted in the future which are or become applicable to Tenant, the Premises, the Building or the Common Areas.

(b) Landlord Indemnity. Landlord shall indemnify, protect, defend (by counsel acceptable to Tenant) and hold harmless Tenant from and against any and all claims, judgments, causes of action, damage, penalties, fine, taxes, costs, liabilities, losses and expenses arising at any time during or after the Term as a result (directly or indirectly) of or in connection with the presence of Hazardous Materials on, under or about the Premises, Building or Common Areas or other violation of laws relating to Hazardous Materials other than caused by Tenant. This indemnity shall include, without limitation, the cost of any required or necessary repair, cleanup or detoxification, and the preparation and implementation of any closure, monitoring or other required plans, as such action is required by local or state laws or any governmental agency. Landlord shall promptly deliver to Tenant a copy of any notice received from any governmental agency during the Term of this Lease concerning the presence of Hazardous Materials in the Building or the Premises. Landlord's obligations pursuant to the foregoing indemnity shall survive the expiration or termination of this Lease. A default by Landlord under this Section shall constitute a material default under this Lease.

22. ESTOPPEL CERTIFICATES. Tenant shall, within thirty (30) days after written request of Landlord, execute, acknowledge and deliver to Landlord or its designee a written statement in the form of Document II in the Supplemental Lease Documents delivered to Landlord concurrently herewith (properly completed) but shall have no other obligation to deliver any other form of estoppel certificate. It is intended that any such statement delivered pursuant to this Section may be relied upon by a prospective purchaser of Landlord's interest or holder of any mortgage upon Landlord's interest in the Premises.

23. TENANT IMPROVEMENTS. Prior to the Commencement Date, Landlord shall construct the Tenant Improvements in the manner set forth in the Landlord's Work Letter executed by Landlord and Tenant concurrently herewith.

24. LIENS. Tenant shall keep its interest in this Lease and the Premises free from any liens arising out of any work performed or materials ordered or obligations incurred by Tenant. Landlord shall keep its interest in this Lease and the Premises free from any liens which would impair the interest of Tenant hereunder and hereby indemnifies and holds Tenant harmless from any liability or loss from any such lien.

25. SUBORDINATION AND MORTGAGES

(a) Subordination and Non-Disturbance. Tenant agrees, at Landlord's option, to subordinate this Lease to the lien of any mortgages or deeds of trust now or hereafter in force against the Building; provided, however, Tenant's obligation to subordinate this Lease is expressly conditioned upon Tenant receiving a written agreement in the form of Document I in the Supplemental Lease Documents delivered to Landlord concurrently herewith and provided

further that no such subordination shall affect any option to extend the Term of this Lease, right of first offer to lease additional premises, option to purchase or right of first offer to purchase the Property which may be included herein.

(b) Existing Deeds of Trust. The beneficiary under any existing deed of trust affecting the Building shall provide a written agreement to Tenant in the form of Document I in the Supplemental Lease Documents delivered to Landlord concurrently herewith within thirty (30) days after the execution of this Lease.

(c) Request for Notice. Landlord acknowledges that Tenant intends to record a Request for Notice with respect to any mortgages or deeds of trust affecting the Property in the form of Document V in the Supplemental Lease Documents delivered to Landlord concurrently herewith.

(d) Notice of Default. If any mortgagee or beneficiary under a deed of trust affecting the Property gives written notice of its name and address to Tenant by registered mail requesting any such notice with reference to this Section, Tenant agrees to use its best efforts (but without liability for failure to do so) to give such mortgagee a copy of any notice of default served upon Landlord hereunder which could permit Tenant to terminate this Lease and an additional ten (10) days within which to cure such default.

26. SURRENDER OF POSSESSION. Subject to casualty, at the expiration of the Term of this Lease, whether by lapse of time or otherwise, Tenant shall promptly and peacefully surrender the Premises to Landlord in a "broom-clean" condition. Landlord shall upon notice or to Tenant prior to the expiration of the Term of the Lease require that Tenant or Tenant may without notice to Landlord remove, at its own expense, all fixtures, equipment and all other personal property placed or installed in or upon the Premises by Tenant, or under its authority (including any modular furniture) .

27. SIGNAGE. Tenant shall be permitted to install at the Premises reasonably appropriate signs that conform with the sign criteria established for the Building, and any and all applicable laws and ordinances subject to Landlord's approval, not to be unreasonably withheld, conditioned or delayed.

28. QUIET ENJOYMENT. So long as Tenant is not in default hereunder, Tenant shall have the right to the quiet and peaceful enjoyment and possession of the Premises and the Common Areas during the Term of this Lease, subject to the terms and conditions of this Lease.

29. GENERAL

(a) Headings. Titles to Sections of this Lease are not a part of this Lease and shall have no effect upon the construction or interpretation of any part hereof.

(b) Successors and Assigns. All of the covenants, agreements, terms and conditions contained in this Lease shall inure to and be binding upon the Landlord and Tenant and their respective successors and assigns.

(c) Brokers. Landlord and Tenant each represent and warrant to each other that it has not engaged any broker, finder or other person who would be entitled to any commission or fees in respect of the negotiation, execution or delivery of this Lease other than as disclosed to the other in writing and shall indemnify and hold harmless each other against any loss, cost,

RC

liability or expense incurred by the other party as a result of any claim asserted by any such broker, finder or other person on the basis of any arrangements or agreements made or alleged to have been made in variance with this representation. Tenant shall receive from Landlord or Landlord's broker, within ten (10) days after the execution of this Lease, an amount equal to 50% of all commissions due to Landlord's broker as a result of the execution of this Lease.

(d) Entire Agreement. This Lease (and the Landlord's Work Letter and Supplemental Lease Documents) is the final and complete expression of Landlord and Tenant relating in any manner to the leasing, use and occupancy of the Premises, to Tenant's use of the Building and other matters set forth in this Lease. No prior agreements or understanding pertaining to the same shall be valid or of any force or effect and the covenants and agreements of this Lease shall not be altered, modified or added to except in writing signed by both Landlord and Tenant.

(e) Severability. Any provision of this Lease which shall prove to be invalid, void or illegal shall in no way affect, impair or invalidate any other provision hereof and the remaining provisions hereof shall nevertheless remain in full force and effect.

(f) Notices. All notices and communications to any party hereunder shall be in writing and shall be deemed properly given if delivered personally, sent by registered or certified mail, postage prepaid, or by a recognized overnight commercial messenger providing proof of delivery, facsimile (electronically confirmed) to Landlord's Address for Notice and Tenant's Address for Notice as set forth in Section 1. Any notice so given shall be deemed to have been given as of the date of delivery (whether accepted or refused) established by U.S. Post Office return receipt or the overnight carrier's proof of delivery, as the case may be. Any such notice not so given shall be deemed given upon receipt of the same by the party to whom the same is to be given.

(g) Governing Law and Forum. This Lease shall be governed by and construed in accordance with the internal laws of the State of California. Any litigation with respect to this Lease shall be conducted in the County of Los Angeles, State of California.

(h) Waivers. No waiver by Landlord or Tenant of any provision hereof shall be deemed a waiver of any other provision hereof or of any subsequent breach by Landlord or Tenant of the same or any other provision. Landlord's or Tenant's consent to or approval of any act shall not be deemed to render unnecessary the obtaining of Landlord's or Tenant's consent to or approval of any subsequent act by Landlord or Tenant.

(i) Time of Essence. Time is of the essence for the performance of all of the obligations specified hereunder.

(j) Consent. Whenever any consent is required by Landlord or Tenant hereunder, such consent shall not be unreasonably withheld, conditioned or delayed and, unless otherwise specifically provided herein, shall be deemed granted if not refused within ten (10) days after written request is made therefore, together with all necessary information.

(k) Community Business Enterprises. Landlord shall complete and deliver to Tenant concurrently with the execution hereof a Community Business Enterprises form set forth as Document III in the Supplemental Lease Documents delivered to Landlord concurrently herewith.

(l) Memorandum of Lease. If requested by Tenant, Landlord and Tenant shall execute and acknowledge a Memorandum of Lease in the form of Document IV in the Supplemental Lease Documents delivered to Landlord concurrently herewith, which Memorandum may be recorded by Tenant in the Official Records of Los Angeles County.

30. AUTHORITY. Only the Board of Supervisors has the authority, by formally approving and/or executing this Lease, to bind the County to the terms included herein. Each individual executing this Lease on behalf of Tenant represents and warrants that he or she is duly authorized to execute and deliver this Lease on behalf of Tenant, and that this Lease is binding upon Tenant in accordance with its terms. Landlord understands that no material terms of this Lease may be altered or deleted, nor may any new material terms be added to this Lease, without the express written approval of the Board of Supervisors, either through an amendment to the Lease or by other formal board action. No County officer, employee, agent or independent contractor has any authority to alter, add or delete the material terms of this Lease and Landlord may not rely upon any representations to the contrary. This limitation of authority applies to all material terms of the Lease including, without limitation, any monetary ceiling established for Tenant Improvements or other project costs of Landlord which are subject to reimbursement by County. County shall not reimburse Landlord for any expenses which exceed this ceiling. Notwithstanding the foregoing, the Chief Executive Officer of the County or its delegee (the "Chief Executive Officer") may take any administrative act on behalf of Tenant hereunder which does not have the effect of increasing Basic Rent or other financial obligations of Tenant under this Lease, including without limitation, granting any approvals, terminating this Lease in the manner provided herein by an Early Termination Notice or otherwise, signing estoppel certificates, signing the Commencement Date Memorandum and Confirmation of Lease Terms or subordinating this Lease. Each individual executing this Lease on behalf of Landlord represents and warrants that he or she is duly authorized to execute and deliver this Lease on behalf of Landlord, and that this Lease is binding upon Landlord in accordance with its terms.

31. ACKNOWLEDGMENT BY LANDLORD

Landlord acknowledges that it is aware of the following provisions:

(a) Consideration of GAIN Program Participants. Should Landlord require additional or replacement personnel after the effective date of this Lease, Landlord shall give consideration for any such employment, openings to participants in the County Department of Public Social Services' Greater Avenues for Independence ("GAIN") Program who meet Landlord's minimum qualifications for the open position. The County will refer GAIN participants by job category to Landlord.

(b) Solicitation of Consideration. It is improper for any County officer, employee or agent to solicit consideration in any form from a landlord with the implication, suggestion or statement that the landlord's provision of the consideration may secure more favorable treatment for the landlord in the award of the Lease or that landlord's failure to provide such consideration may negatively affect the County's consideration of the landlord's offer to lease. A landlord shall not offer or give, either directly or through an intermediary, consideration in any form to a County officer, employee or agent for the purpose of securing favorable treatment with respect to the award of the Lease.

Landlord shall immediately report any attempt by a County officer, employee or agent to solicit such improper consideration. The report shall be made either to the County manager charged with the supervision of the employee or to the County Auditor-Controller's Employee Fraud Hotline at (213) 974-0914 or (800) 544-6861. Failure to report such solicitation may result in the landlord's submission being eliminated from consideration.

(c) Landlord Assignment.

(i) Landlord may assign, transfer, mortgage, hypothecate or encumber Landlord's right, title and interest in and to this Lease or any portion thereof (including the right to receive rental payments but excluding its duties and obligations hereunder), and Landlord may execute any and all instruments providing for the payment of Basic Rent directly to an assignee or transferee, but only if the conditions set forth in this Section are met.

(ii) Any document or agreement purporting to assign, transfer, mortgage, hypothecate or encumber Landlord's right, title and interest in and to this Lease or any portion thereof, is hereinafter referred to as a "Security Agreement." Any Security Agreement which is executed without full compliance with the requirements of this Section shall be void.

(iii) Each assignee or transferee under the Security Agreement shall certify and agree in writing that such assignee or transferee has read and is familiar with the requirements of Sections 5950-5955 of the California Government Code, which prohibits the offer or sale of any security constituting a fractional interest in this Lease or any portion thereof, without the prior written consent of the County. Notwithstanding the foregoing, the County hereby acknowledges and agrees that Landlord shall have the right to encumber the Property with CMBS (collateralized mortgage backed securities) financing or other traditional real estate financing. However, Landlord may not encumber the Property through any type of bond financing vehicle, including but not limited to certificate of participation financing.

(iv) Violation by Landlord of the provisions of Section 5951 of the California Government Code will constitute a material breach of this Lease, upon which the County may impose damages in an amount equal to the greater of (a) $500,000 or (b) 10% of the aggregate principal portion of all rental payments payable by the County during the entire Term of this Lease, it being expressly agreed that the aforesaid amount shall be imposed as liquidated damages, and not as a forfeiture or penalty. It is further specifically agreed that the aforesaid amount is presumed to be the amount of damages sustained by reason of any such violation, because from the circumstances and nature of the violation it would be impracticable and extremely difficult to fix actual damages. In addition, the County may exercise or pursue any other right or remedy it may have under this Lease or applicable law.

(v) Landlord shall give the County notice and a copy of each Security Agreement and any other instrument relating thereto (including, but not limited to, instruments providing for the payment of Basic Rent directly to an assignee or transferee) at least two weeks prior to the effective date thereof.

(vi) Landlord shall not furnish any information concerning County or the subject matter of this Lease (including, but not limited to, offering memoranda, financial statements, economic and demographic information, and legal opinions rendered by the office of counsel for the County) to any person or entity, except with County's prior written consent. Landlord shall indemnify, defend and hold County and its officers, agents and employees harmless from and against all claims and liability alleged to arise from the inaccuracy or incompleteness of any information furnished by Landlord in violation of this Section.

(vii) The provisions of this Section shall be binding upon and applicable to the parties hereto and their respective successors and assigns. Whenever in this Section Landlord is referred to, such reference shall be deemed to include Landlord's successors or assigns, and all covenants and agreements by or on behalf of Landlord herein shall bind and apply to Landlord's successors and assigns whether so expressed or not.

32. IRREVOCABLE OFFER. In consideration for the time and expense that Tenant will invest, including, but not limited to, preliminary space planning, legal review, and preparation and noticing for presentation to the Tenant Real Estate Management Commission of Los Angeles County in reliance on Landlord's agreement to lease the Premises to Tenant under the terms of this Lease, Landlord irrevocably offers to enter into this Lease and not to revoke this offer until the Irrevocable Offer Expiration Date, as defined in Section 1.

33. OPTION TO EXTEND.

(a) Terms of Option Provided that no material default has occurred and is continuing under the Lease at the time the option is exercised, Tenant shall have two (2) options to renew this Lease for two (2) additional periods of five (5) years each (each, an "Option Term").

(b) Exercise of Option Tenant must exercise its option to extend this Lease, if it elects to do so, by giving Landlord written notice of its intent to do so by Chief Executive Office letter no later than sixty (60) days prior to the end of the initial Term, or first option term, as the case may be.

(c) Terms and Conditions of Extension Term The Option Term shall be on all the terms and conditions of this Lease, except that Basic Rent for each Option Term shall be the rate in effect (adjustable only as provided in Sections 2(b) and 5) hereof during the last year of the original Lease Term (or first Option Term, as the case may be).

AC

IN WITNESS WHEREOF this Lease has been executed the day and year first above set forth.

LANDLORD:

HONG KONG GARDEN, INC.

By: _____
Name: Spencer L.M. Chan
Its: PRESIDENT

I hereby certify that pursuant to Section 25103 of the Government Code, delivery of this document has been made.

SACHI A. HAMAI
Executive Officer
Clerk of the Board of Supervisors

By _____
Deputy

TENANT:

COUNTY OF LOS ANGELES
a body politic and corporate

By: _____
Name: Don Knabe
Chair, Board of Supervisors

_____

ATTEST:

Sachi A. Hamai
Executive Officer-Clerk
of the Board of Supervisors

By: _____
Deputy

ADOPTED
BOARD OF SUPERVISORS

#10 JUL 08 2014

Sachi A. Hamai
SACHI A. HAMAI
EXECUTIVE OFFICER

APPROVED AS TO FORM:
John F. Krattli
County Counsel

By: _____
Deputy

78234

EXHIBIT A

FLOOR PLAN OF PREMISES

Premises A

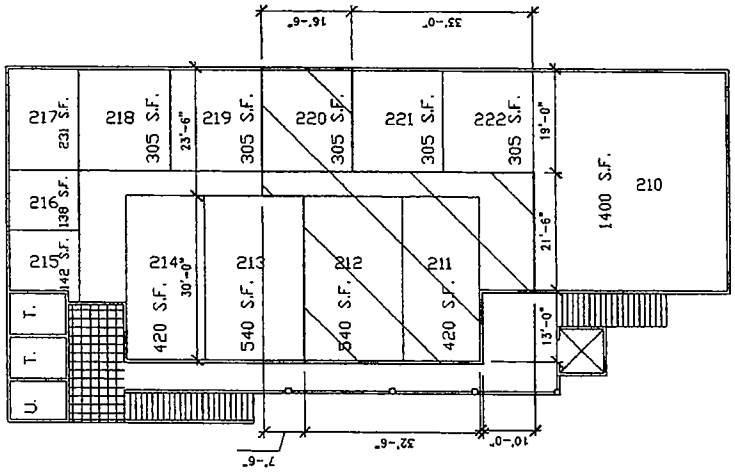

Premises B

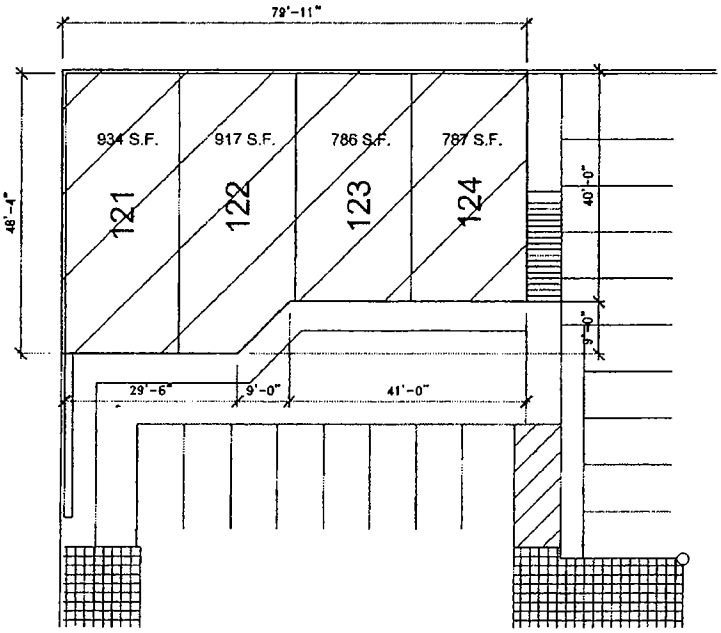

EXHIBIT B

LEGAL DESCRIPTION OF PROPERTY

A PARCEL OF LAND LOCATED IN THE STATE OF CALIFORNIA, COUNTY OF LOS ANGELES, WITH A SITUS ADDRESS OF 21730 S VERMONT AVE, TORRANCE CA 90502-2109 CURRENTLY OWNED BY HONG KONG GARDEN INC HAVING A TAX ASSESSOR NUMBER OF 7344-002-007 AND BEING THE SAME PROPERTY MORE FULLY DESCRIBED AS TRACT NO 3239 LOT COM N ON E LINE OF LOT 5,145.2 FT FROM SE COR OF SD LOT TH W PARALLEL WITH S LINE OF SD LOT TO E LINE OF VERMONT AVE TH N THEREON TO N LINE OF S 2 ACS OF SD LOT TH E ON SD N AND DESCRIBED IN DOCUMENT NUMBER 211914 DATED 01/14/2006 AND RECORDED 01/30/2006.

AC

EXHIBIT C

COMMENCEMENT DATE MEMORANDUM
AND CONFIRMATION OF LEASE TERMS

Reference is made to that certain lease ("Lease") dated _____, 200_, between County of Los Angeles, a body politic and corporate ("Tenant"), and _____, a _____("Landlord"), whereby Landlord leased to Tenant and Tenant leased from Landlord certain premises in the building located at _____ ("Premises"),

Landlord and Tenant hereby acknowledge as follows:

(1) Landlord delivered possession of the Premises to Tenant in a Substantially Complete condition on _____ ("Possession Date");

(2) Tenant has accepted possession of the Premises and now occupies the same;

(3) The Lease commenced on _____ ("Commencement Date");

(4) The Premises contain _____ rentable square feet of space; and

(5) Basic Rent per Month is _____.

IN WITNESS WHEREOF, this Memorandum is executed this ___day of_____, 20__.

"Tenant"	"Landlord"
COUNTY OF LOS ANGELES, a body politic and corporate By: _____ Name: _____ Its: _____	_____, HONG KONG GARDEN, INC. By: _____ Name: _____ Its: _____

RC

EXHIBIT D

HVAC STANDARDS

Landlord shall supply cooling, ventilating and heating with capacity to produce the following results effective during Normal Working Hours established by the Lease and within tolerances normal in comparable office buildings; maintenance of inside space conditions of not greater than 78 degrees Fahrenheit when the outside air temperature is not more than 93 degrees Fahrenheit dry bulb and 70 degrees Fahrenheit wet bulb, and not less than 70 degrees Fahrenheit when the outside air temperature is not lower than 42 degrees Fahrenheit dry bulb. Interior space is designated at a rate of one zone for approximately each 1,000 square feet and one diffuser for each 200 square feet of usable square footage within the Premises. If energy requirements prohibit Landlord from complying with these requirements, Tenant shall not unreasonably withhold its consent to temporary waivers or modifications. HVAC units shall be serviced by Lanlord for preventative maintenance purposes, and all filters changed.

AC

EXHIBIT E

CLEANING AND MAINTENANCE SCHEDULE

1. DAILY (Monday through Friday)

~~A. Carpets vacuumed.~~
~~B. Composition floors dust-mopped.~~
~~C. Desks, desk accessories and office furniture dusted. Papers and folders left on desk not to be moved.~~
~~D. Waste baskets, other trash receptacles emptied.~~
~~E. Chairs and waste baskets returned to proper position.~~
~~F. Fingerprints removed from glass doors and partitions.~~
~~G. Drinking fountains cleaned, sanitized and polished.~~
~~H. Lavatories, toilets and toilet rooms cleaned and mopped. Toilet supplies replenished.~~
I. Bulb and tube replacements, as required.
J. Graffiti expunged as needed within two (2) working days after notice by Tenant.
~~K. Floors washed as needed.~~
~~L. Kitchen/Lunchroom supplies replenished including paper supplies and soap.~~
~~M. Exclusive day porter service from ____ to ____ **(if provided by contract).**~~

2. WEEKLY

~~A. Low reach areas, chair rungs, baseboards and insides of door jambs dusted.~~
~~B. Window sills, ledges and wood paneling and molding dusted.~~

3. MONTHLY

~~A. Floors washed and waxed in uncarpeted office area.~~
~~B. High reach areas, door frames and tops of partitions dusted.~~
~~C. Upholstered furniture vacuumed, plastic and leather furniture wiped.~~
~~D. Picture moldings and frames dusted.~~
~~E. Wall vents and ceiling vents vacuumed.~~
~~F. Carpet professionally spot cleaned as required to remove stains.~~

4. QUARTERLY

~~A. Light fixtures cleaned and dusted, but not less frequently than Quarterly.~~
~~B. Wood furniture polished.~~
~~C. Draperies or mini-blinds cleaned as required, but not less frequently than Quarterly~~.
D. HVAC units serviced for preventative maintenance purposes, all filters changed.

5. SEMI-ANNUALLY

A. Windows washed as required ~~inside and~~ outside but not less frequently than twice annually.
~~B. All painted wall and door surfaces washed and stains removed.~~
~~C. All walls treated with vinyl covering washed and stains removed.~~

AC

6. ANNUALLY

~~A. Furniture Systems and any other fabric or upholstered surfaces including chairs, couches, walls, etc., spot cleaned, or if determined to be necessary in Tenant's sole discretion, professionally cleaned in their entirety using a water extraction system.~~

~~B. Bathroom and any other ceramic tile surfaces professionally cleaned using a hand scrub process. All grout and porous surfaces resealed with a professional grade sealant.~~

~~C. Touch-up paint all interior painted surfaces in a color and finish to match existing.~~

7. AS NEEDED

A. Premises and the sidewalks, driveways, parking areas and all means of access and egress for the Premises should be maintained in good repair, and in clean and safe condition at all times.

B. All lawns, shrubbery and foliage on the grounds of the Premises should be maintained in good condition and neat in appearance. Grass and shrubbery must be replanted as needed to maintain the grounds in good appearance and condition.

C. ~~Carpets to be cleaned using a non-detergent, low moisture, soil-encapsulation system as recommended by the carpet manufacturer. The following schedule will be maintained for carpet cleaning: (i) heavy traffic areas as needed with a minimum frequency of bi-monthly [six (6) times per year]; (ii) moderate traffic areas cleaned as needed with a minimum of once every six (6) months [two (2) times per year]; and (iii) clean light traffic areas a minimum of once per year. Landlord agrees that bonnet cleaning is not an acceptable method of cleaning carpets.~~

~~D. All walls repainted and wall coverings replaced throughout the Premises. The paint finish should be eggshell or semi-gloss as directed by Tenant and in a color acceptable to Tenant. In no event will Landlord be required to repaint or replace wall coverings more than one (1) time in a five (5) year period (the "Occurrence"). The initial tenant improvements completed prior to Tenant's occupancy or as a condition to the renewal of the Lease shall not constitute and Occurrence for the purpose of determining the frequency of this work.~~

8. GENERAL N/A

AC

LANDLORD'S WORK LETTER

For

COUNTY OF LOS ANGELES
CHIEF EXECUTIVE OFFICE
LEASE AND AGREEMENT

DEPARTMENT: MENTAL HEALTH, as Tenant

LANDLORD: HONG KONG GARDEN, INC.

21732 SOUTH VERMONT AVENUE, SUITE 210 AND
21730 SOUTH VERMONT AVENUE SUITE 122
TORRANCE, CALIFORNIA

LANDLORD'S WORK LETTER

This Work Letter supplements the Lease (the "Lease") dated _____, 20__, executed concurrently herewith, by and between HONG KONG GARDEN, INC., ("Landlord") as Landlord, and COUNTY OF LOS ANGELES ("Tenant" or "County") as Tenant, covering certain Premises described in the Lease. Terms capitalized but not otherwise defined herein shall have the meanings ascribed to them in the Lease.

The parties hereby agree as follows:

1. Basic Work Letter Information. The following terms as used herein shall have the meanings provided in this Section unless otherwise specifically modified by provisions of this Work Letter.

(a) Base Tenant Improvement Allowance:	$56,168 (i.e., $8 per rentable square foot of the Premises).
(b) Additional Tenant Improvement Allowance:	$527,025 (i.e., $75 per rentable square foot of the Premises).
(c) Maximum Change Order Allowance:	$35,105 (i.e., $5 per rentable square foot).
(d) Additional Tenant Improvement and Change Order Amortization Rate:	Not Applicable
(e) Basic Rent Reduction per $1,000:	Not Applicable.
(f) Tenant's Work Letter Representative:	Miguel Covarrubias or an assigned staff person of the Chief Executive Office-Real Estate Division.
(g) Landlord's Work Letter Representative:	An assigned staff person of the Landlord.
(h) Landlord's Address for Work Letter Notice:	See Section 1(a) of the Lease.
(i) Tenant's Address for Work Letter Notice:	Board of Supervisors Kenneth Hahn Hall of Administration Room 383 500 West Temple Street Los Angeles, California 90012

	With a copy to: Chief Executive Office- Real Estate Division 222 South Hill Street, 3rd Floor Los Angeles, California 90012 Attention: Director of Real Estate Fax Number: (213) 217-4971
(j) Addenda:	Addendum A: Base Building Improvements Addendum B: Tenant Improvements

2. **Construction of the Building.**

2.1 Base Building Improvements. Landlord has constructed or shall construct the base Building improvements as a part of the Building described on Addendum A hereto (the "Base Building Improvements"). To the extent that the Base Building Improvements must be changed or added to in order to accommodate the special needs of Tenant in the Premises, such changes or additions shall be considered Tenant Improvements (as defined below) only to the extent such changes or additions are specifically described in Addendum B hereto.

2.2 Additional Costs Not Tenant Improvement Costs.

(a) In the event that the Building as initially constructed does not comply with current life-fire safety codes, disabled access codes (including, without limitation, the ADA), and/or earthquake safety codes, and Landlord incurs increased design or construction costs that it would not have incurred had the Building been in compliance with such codes, such costs shall not be included in the calculation of Tenant Improvement Costs as defined below and Tenant shall have no financial responsibility for such costs.

(b) Any work that Landlord must undertake to cause the Premises to comply with the access requirements of the ADA or make existing building systems, including, but not limited to, electrical service and HVAC equipment, fully operational shall be at Landlord's sole cost and expense. Tenant Improvement Costs shall not include any costs associated with (i) asbestos abatement or compliance with the Hazardous Materials provision of the Lease, including all expenses associated with curing any "Sick Building Syndromes"; (ii) fire sprinkler system installation or upgrade; (iii) conversion of air conditioning systems to eliminate use of CFC refrigerants that are harmful to the atmosphere; (iv) utility costs incurred during construction; (v) costs incurred in order to cause the Premises to comply with any mechanical or electrical requirements set forth in the Lease; or (vi) supervision or overhead costs of Landlord.

(c) Landlord shall be solely responsible for all costs and expenses necessary to increase permitted structural floor loading in order to accommodate Tenant's libraries, file rooms, unusual live loads and other such uses.

2.3 Base Building Plans. Landlord has delivered to Tenant "as built" plans and specifications for the Building in an AutoCAD 2000 format. In the event Tenant incurs additional costs because such plans and specifications are incomplete or inaccurate, such increased costs will

AC

be reimbursed to Tenant and any delay caused thereby shall not be a Tenant Delay, as defined below.

3. **Selection of Architect and Engineer.** Landlord shall promptly solicit at least three proposals from qualified licensed architects ("Architect") and engineers ("Engineer") familiar with all applicable laws and building requirements detailing a scope of work sufficient to complete the Working Drawings as defined below. The Architect and the Engineer shall be selected by Landlord subject to Tenant's consent, which consent shall not be unreasonably withheld, and which consent (or refusal to consent for reasonable reasons) shall be granted within three business days after Landlord has submitted the name of the Architect and the Engineer to Tenant together with detailed proposals outlining the cost for design/engineering services. This procedure shall be repeated until the Architect and the Engineer is/are finally approved by Tenant and written consent has been delivered to and received by Landlord.

4. **Selection of Contractor.** The Final Plans, as defined below, and a proposed construction contract approved by Tenant, shall be submitted to contractors, selected by Landlord and approved by Tenant, sufficient in number so that a minimum of three bids are received. Each approved contractor shall be requested to submit a sealed fixed price contract bid price (on such contract form as Landlord shall designate) to construct the Tenant Improvements designated on the Final Plans. Landlord and Tenant shall jointly open and review the bids. Landlord and Tenant, after adjustments for inconsistent assumptions, shall select the most qualified bidder offering the lowest price and such contractor ("Contractor") shall enter into a construction contract ("Construction Contract") with Landlord consistent with the terms of the bid to construct the Tenant Improvements.

5. **Preparation of Plans and Specifications and Construction Schedule**.

5.1 Preparation of Space Plan. Concurrently with the execution of this Lease, Tenant shall submit to Landlord a space plan and specifications for the Premises showing all demising walls, corridors, entrances, exits, doors, interior partitions, and the locations of all offices, conference rooms, computer rooms, mini-service kitchens, and the reception area, library, and file room (collectively the "Space Plan").

5.2 Preparation and Approval of Working Drawings. Within ten days of the date the Space Plan is submitted to Landlord (the "Plan Submission Date"), Landlord shall instruct the Architect to commence preparation of Working Drawings (the "Working Drawings"), which shall be compatible with the design, construction and equipment of the Building, comply with all applicable laws, be capable of physical measurement and construction, contain all such information as may be required for the construction of the Tenant Improvements and the preparation of the Engineering Drawings (as defined below), and contain all partition locations, plumbing locations, air conditioning system and duct work, special air conditioning requirements, reflected ceiling plans, office equipment locations, and special security systems. The Working Drawings may be submitted in one or more stages and at one or more times. Landlord shall provide Tenant the Working Drawings, or such portion as has from time to time been submitted, for review. Landlord shall be solely responsible for insuring that the Working Drawings fully comply with all applicable building codes and are free from errors or omissions on the part of the Architect.

5.3 Preparation and Approval of Engineering Drawings. Landlord shall cause the Architect to coordinate all engineering drawings prepared by the Engineer, showing complete mechanical, electrical, plumbing, and HVAC plans ("Engineering Drawings") to be integrated into

the Working Drawings. The Engineering Drawings may be submitted in one or more stages and at one or more times for Tenant's review.

5.4 Integration of Working Drawings and Engineering Drawings into Final Plans. After Tenant has approved the Engineering Drawings, Landlord shall cause the Architect to integrate the approved Working Drawings with the approved Engineering Drawings (collectively "Final Plans") and deliver five sets of the Final Plans to Tenant. The Final Plans shall be suitable for plan check review and permitting by local agencies having jurisdiction, for the layout, improvement and finish of the Premises consistent with the design and construction of the Base Building Improvements, including electrical and mechanical drawings, capacity reports, dimensioned partition plans, floor and wall finish plans, reflected ceiling plans, power, telephone communications and data plans, life safety devices, construction detail sheets including millwork detail plans showing the location of partitions, light fixtures, electrical outlets, telephone outlets, sprinklers, doors, equipment specifications (including weight specifications and cooling requirements) and power requirements (including voltage, amps, phase, and special plugs and connections), wall finishes, floor coverings, millwork and other Tenant Improvements.

5.5 Approval of Plans by Tenant. Approval by Tenant shall not be deemed to be a representation by Tenant as to the adequacy or correctness of the design of the Tenant Improvements.

5.6 Schedule. Within 30 days after the Plan Submission Date, Landlord shall submit to Tenant a detailed construction schedule, subject to approval by Tenant which approval shall not be unreasonably withheld, setting forth the dates specific completion of certain project benchmarks including, but not limited to, completion of Working Drawings, completion of Engineering Drawings, submission of plans to local jurisdiction for review, issuance of building permit, submission of plans to contractors for bidding, award of construction contract, construction commencement, construction completion, Projected Commencement Date and other similar dates. As the construction continues, Landlord shall amend the schedule from time to time to reflect any changes to the projected dates.

6. Final Construction Budget and Payment of Tenant Construction Costs.

6.1 Construction Budget. Within three days after the Plan Submission Date, Landlord shall submit to Tenant a preliminary budget (the "Preliminary Budget"). Such budget shall be revised into final form within ten days from of the date the Contractor is selected and will be referred to herein as the "Final Construction Budget". Tenant shall have five days from the date of receipt of the Final Construction Budget to approve or disapprove the Final Construction Budget. Construction of the Tenant Improvements shall not begin until such time as Tenant indicates its approval or disapproval of the Final Construction Budget or the five day period expires without any response from Tenant. In the event Tenant disapproves the Final Construction Budget due to matters related to cost and the Final Construction Budget is ten percent (10%) or more higher in cost than was projected in the Preliminary Construction Budget, then any delay caused by the necessity to rebid or redesign the Tenant Improvements shall not be considered a Tenant Delay. Landlord shall review the Space Plan, Working Drawings, Engineering Drawings and Final Plans at its sole cost and expense. No fee for profit, overhead or general conditions in connection with the construction of the Tenant Improvements shall be included in the Final Construction Budget unless approved by Tenant.

AC

6.2 Additional Tenant Improvement Allowance. All improvements required by the Working Plans and modular furniture described in the Modular Specifications, as further described in Addendum B hereto (collectively, the "Tenant Improvements") shall be at Landlord's sole cost and expense. Costs of Tenant Improvements shall include, without limitation, construction costs for furniture, telecommunications equipment, soft costs and any other costs designated in writing by Tenant not to exceed, in the aggregate, the sum of the Base Tenant Improvement Allowance, the Additional Tenant Improvement Allowance and costs of Change Orders, as defined below (collectively "Tenant Improvement Costs"). Landlord shall be solely responsible for any delay or increased cost in completing the Tenant Improvements except for delays or costs arising from Tenant Delays as defined below. It is anticipated that the Tenant Improvement Costs will exceed the Tenant Improvement Allowance, and Tenant's Chief Executive Office may authorize Landlord to pay the overage in an amount not exceeding the Additional Tenant Improvement Allowance. The Additional Tenant Improvement Allowance shall be paid to Landlord as provided herein.

6.3 Method of Payment. That portion of the Additional Tenant Improvement Allowance and Change Order Allowance used to pay for the Tenant Improvement Costs will be paid to Landlord in a lump sum when the Tenant Improvements are Substantially Complete and accepted by the Tenant.

7. Construction of Tenant Improvements.

7.1 Tenant Improvements. Tenant Improvements to be constructed by Landlord are described more particularly on Addendum B hereto. If any work required by the Final Plans is not described on Addendum B hereto the work shall be performed by Landlord at its own cost and expense and not included in the cost of Tenant Improvements.

7.2 Bids. Unless waived by Tenant in writing, any major contractors, subcontractors and materials providers providing labor and/or materials for the Tenant Improvements shall be selected only after at least three bids have been solicited from responsible and qualified persons. Landlord shall submit at least three sealed fixed price bids for the construction of the Tenant Improvements to Tenant for its review prior to the award of the Construction Contract. The bids shall be jointly opened and reviewed. The bids shall include an itemized list of all materials and labor and shall include all additional costs, including architects and engineering fees, permits, reasonable contractor's profit and overhead, and project management fees. At least three bids for the purchase and installation of the office furniture system, prepared by the furniture dealer, shall be included in the construction estimates, if applicable.

(a) Permits. Landlord shall secure the approval of governmental authorities, and all permits required by governmental authorities having jurisdiction over such approvals and permits for the Tenant Improvements, promptly after approval of the Final Plans.

(b) Commencement of Construction. Landlord shall commence construction of the Tenant Improvements within 15 days after issuance of all such necessary permits. Landlord shall commence and, once commenced, shall thereafter diligently proceed to construct and complete all Tenant Improvements, subject to any cessation that may be caused by Force Majeure Delays.

7.3 Construction. Construction of the Tenant Improvements will be subject to the following terms and conditions:

(a) Notice of Nonresponsibility. Landlord and the Contractor shall cooperate with Tenant in posting a notice or notices of nonresponsibility by Tenant.

(b) Decorating Decisions. All design and programming, space planning and interior decorating services, such as selection of wall paint colors and/or wall coverings, furniture, fixtures, carpeting and any or all other decorator selection efforts required by Tenant, shall be provided by Landlord at Landlord's expense in accordance with Tenant's Space Plan. Landlord shall consult with Tenant with respect to all such decorating services and decisions.

(c) Clean-Up and Substandard Work. Landlord will be responsible for all clean-up with respect to the Tenant Improvements, whether in the Premises themselves or in other areas utilized by Landlord or its contractors, and agrees to reimburse Tenant for any and all expenses incurred by Tenant by reason of substandard work performed by Landlord's contractor or contractors (as reasonably determined by Tenant according to the usual standards of work in the Building) or as a result of inadequate clean-up.

(d) Compliance with Laws. Construction of the Tenant Improvements shall comply with all applicable laws and regulations and shall be subject to the general inspection of Tenant. The Premises shall comply with all applicable city, county, state and federal building codes, regulations and ordinances required for beneficial occupancy, including, but not limited to, all provisions of the Labor Code of the State of California. Under the provisions of the Labor Code, the State Department of Industrial Relations will ascertain the prevailing hourly rate in dollars and details pertinent thereto for each craft, classification or type of workman or mechanic needed for the construction of the improvements. Particulars of the current Prevailing Wage Scale as approved by the Board of Supervisors which are applicable to the work are filed with the Clerk of the Board of Supervisors and must be posted at the site.

7.4 Conformed Plans. Within 60 days after Substantial Completion of the Tenant Improvements and receipt from the Contractor of all field changes, Landlord shall submit to Tenant a set of conformed plans ("as-builts") incorporating, in accordance with standard industry custom and practice, field changes made and changes and/or revisions that have been made subsequent to the submission of the Final Plans. Such "as-built" or "record documents" shall be submitted on three and one-half inch (3½") 1.4Mb magnetic media diskettes in Auto CAD R 12.dwg (or later version) format or .DXF format, along with one complete set of mylar transparencies of drawings and one complete set of specifications.

8. **Change Orders.** Tenant and Landlord may make changes, additions, deletions or alterations in the Final Plans ("Change Order") provided both Tenant and Landlord approve such changes in writing. The amount of the Maximum Change Order Allowance set forth in Section 1 has been authorized by the Board of Supervisors of the County to be used to pay the costs of all authorized Change Orders but only the Chief Executive Officer is authorized to approve Change Orders on behalf of Tenant and then only if the aggregate amount of such approved Change Orders does not exceed the Maximum Change Order Allowance. Tenant may elect to pay for Change Orders by: (a) payment in a lump sum upon Substantial Completion of the Tenant Improvements, or (b) amortization of such costs over the initial Term of the Lease at the Change Order Amortization Rate payable in equal monthly installments over the initial Term of the Lease. Landlord shall submit to the Chief Executive Officer with each requested Change Order (i) the specific cost of the requested change, (ii) the cumulative net total cost of all Change Orders previously approved, and (iii) an estimate of the construction time which will be increased or shortened if the Change Order is approved. Each Change Order must be signed and dated by the Chief Executive Officer.

9. **Furniture System.**

9.1 Tenant shall deliver to Landlord within ten days after execution hereof, modular furniture plans and specifications (the "Modular Specifications"). Based on the Modular Specifications, Landlord and /or Landlord's Architect, shall prepare a modular furniture specifications bid package for submission to no less than three furniture vendors. Prior to submission for bids, Landlord shall review the bid package with Tenant and Tenant shall have the right to approve or disapprove the bid package. Landlord shall provide at its cost the modular furniture set forth in the Modular Specifications and shall not be responsible for the cost of such modular furniture in excess of the Additional Tenant Improvement Allowance. Tenant shall reimburse the Landlord in a lump sum or in accordance with a financed transaction entered into between Landlord and the furniture vendor acceptable to the Tenant, including, but not limited to, a lease purchase agreement, provided the outstanding balance can be no more than One Dollar ($1) at the end of a term not to exceed 120 months.

9.2 Tenant may opt to finance the lump-sum payment for the cost of modular furniture through lease-purchase financing with a third-party vendor ("Creditor"). In the event the Tenant elects to enter into a lease-purchase financing of the furniture and telecommunications equipment (the "Personal Property") through a Creditor, Landlord expressly agrees as follows:

(a) The Personal Property shall not become part of the realty or real property, but shall remain personal property removable by the Creditor and its assigns, provided that any damage occasioned by such removal shall be repaired by Creditor.

(b) Landlord shall be notified by Creditor of any plan by Creditor to remove the Personal Property.

(c) This section shall be binding on the representatives, successors and assigns of all parties hereto and shall inure to the benefit of the successors-in-interest to all parties hereto.

(d) Landlord does hereby waive any right to gain possession of any of Personal Property during the term of this Lease.

10. **Tenant Improvement Costs Adjustment and Right to Audit.** Within five days of the issuance of a Certificate of Occupancy, or a final sign-off by the City of Los Angeles, which ever occurs first, Landlord shall provide to Tenant a statement showing in reasonable detail all Tenant Improvement Costs and the total amount payable hereunder by Tenant to Landlord. Upon approval of the statement by Tenant, payments by either party pursuant to the Lease and this Landlord's Work Letter shall be adjusted as appropriate, based upon such statement. Tenant shall have the right to audit these costs for a period of 24 months from the date of acceptance by Tenant of the Premises. In the event the audit shows that Tenant is entitled to a reduction in payments to the Landlord under this Landlord's Work Letter, Tenant shall provide Landlord with a copy of the audit summary and Landlord, within 30 days, shall refund to Tenant the amount of any overpayment made by Tenant and all future payments shall be adjusted as appropriate based upon the audit results.

11. **Exclusions.** The Tenant Improvement Costs shall not include any costs incurred for asbestos abatement, fire sprinkler system, or conversion of air conditioning systems to eliminate use of CFC refrigerants that are harmful to the atmosphere. All work for required asbestos abatement, fire sprinkler system, or air conditioning system conversion shall be performed at the sole cost and expense of Landlord.

12. **Telephone/Computer Room and Equipment.** Landlord shall complete the telephone equipment room(s) including permanent power and HVAC, in compliance with the Space Plan and specifications provided by Tenant, at least 30 days prior to the Projected Commencement Date. During this 30 day period, the Landlord shall be solely responsible for any telephone/data equipment delivered to the site for programming prior to the Projected Commencement Date.

13. **Delay.**

13.1. Tenant Delays and Force Majeure Delays. Except as set forth herein, no delay in the completion of construction of the Tenant Improvements shall be considered in the determination of the Commencement Date of the Lease and, except as set forth herein or in the Lease, under no circumstance shall Tenant be charged with any delay whatsoever as a result of delay in the construction of Tenant Improvements. Subject to the provisions of Section 13.2, the Projected Commencement Date set forth in the Lease shall be extended one (1) day for each day that: (i) Tenant fails or refuses to give authorizations or approvals within the time periods required herein but only to the extent such delays delay the commencement or completion of construction of the Tenant Improvements (referred to herein as "Tenant Delay(s)"); or (ii) Substantial Completion of the Tenant Improvements is delayed by lightning, earthquake, fire, storm, tornado, flood, washout, explosion, strike, lockout, labor disturbance, civil disturbance, riot, war, act of a public enemy, sabotage or other similar causes beyond the reasonable control of Landlord (referred to herein as "Force Majeure Delay(s)").

13.2. Limitations.

(a) Notice. No Tenant Delay or Force Majeure Delay shall be deemed to have occurred unless Landlord has provided written notice, within 48 hours of the event giving rise to such claim, in compliance with the Lease, to Tenant specifying that a delay is claimed to have occurred because of actions, inaction or circumstances specified in the notice in reasonable detail. If such actions, inaction or circumstances qualify as a Tenant Delay or Force Majeure Delay, then a Tenant Delay or Force Majeure Delay, as applicable, shall be deemed to have occurred only commencing as of the date Tenant received such notice from Landlord.

(b) Mitigation. Tenant Delays and Force Majeure Delays shall delay the Projected Commencement Date only in the event that Substantial Completion of the Tenant Improvements is delayed, despite Landlord's reasonable efforts to adapt and compensate for such delays, which efforts Landlord shall be obligated to make (provided such additional cost incurred by Landlord due to such effort does not exceed $1,000 on a cumulative basis, unless Tenant agrees to pay to such excess).

(c) Concurrent Delays. Tenant Delays and Force Majeure Delays shall be recognized hereunder only to the extent the same are not concurrent with any other Tenant Delay or Force Majeure Delay which is effective hereunder. For example, if there are ten days of Tenant Delays and four days of Force Majeure Delays which occur during the same ten day period of such Tenant Delays, then the Projected Commencement Date would be extended by only ten days; on the other hand, if such Tenant Delays and Force Majeure Delays did not occur during the same period, the Projected Commencement Date would be extended by 14 days.

AC

(d) Change Orders. Landlord may not claim that a Change Order requested by Tenant was the cause of a delay in the construction of the Tenant Improvements unless the anticipated delay is specified in writing in the Change Order authorization.

14. **Default.** Any default by Landlord under the terms of this Landlord's Work Letter shall constitute a default under the Lease and shall entitle Tenant to exercise all remedies set forth in the Lease.

15. Tenant Remedies. If Landlord fails to obtain the building permit to construct the Tenant Improvements within a reasonable time, taking all factors into consideration, or if Tenant Improvements have not been completed within 60 days after the Projected Commencement Date, Tenant may, at its option:

14.1. Cancel the Lease upon 30 days written notice to Landlord; or

14.2. Upon 30 days written notice to Landlord, assume the responsibility for providing the Tenant Improvements itself. If Tenant elects to provide Tenant Improvements itself, then:

(a). Tenant, its officers, employees, agents, contractors and assignees, shall have free access to the Premises and the Building at all reasonable times for the purpose of constructing the Tenant Improvements and for any other purposes reasonably related thereto; and

(b). Rent shall be reduced by Tenant's total expense in constructing the Tenant Improvements, including any financing charges for capital and a reasonable amount for its administrative costs, and including interest at the rate of six percent (6%) (collectively, "Tenant's Total Expense"). The rent reduction schedule shall be as mutually agreed to between the parties or, if no such agreement is made, Tenant's Total Expense shall be fully amortized in equal monthly amounts over five years and deducted from the rent payable hereunder and under the Lease.

15. **Representatives.**

15.1 Tenant Representative. Tenant has designated Tenant's Work Letter Representative as its sole representative with respect to the matters set forth in this Landlord's Work Letter who, until further notice to Landlord, shall have the full authority and responsibility to act on behalf of Tenant as required in this Work Letter and whose address, for purposes of any notices to be given regarding matters pertaining to this Landlord's Work Letter only, is Tenant's Address for Work Letter Notice as set forth in Section 1.

15.2 Landlord Representative. Landlord has designated Landlord's Work Letter Representative as its sole representative with respect to the matters set forth in this Work Letter who, until further notice to Tenant, shall have the full authority and responsibility to act on behalf of Landlord as required in this Landlord's Work Letter and whose address, for purposes of any notices to be given regarding matters pertaining to this Landlord's Work Letter only, is Landlord's Address for Work Letter Notice as set forth in Section 1.

16. **Elevator Usage During Move-In.** In the event that the use of the freight elevators and/or hoists is not sufficient to meet Tenant's requirements, Landlord shall cause to be made operational (a) a temporary construction elevator and hoist, or (b) Tenant shall have priority usage of two passenger elevators in the elevator bank that services the Premises in order to assist Tenant in the installation of Tenant's fixtures, furniture and equipment.

AC

17. **Construction Meetings.** During the course of construction, meetings shall be held between the Contractor, Landlord and Tenant at least once per week, unless Tenant directs otherwise, at a time and place which is mutually convenient. An initial construction meeting shall be held within five days of the date the Contractor is selected.

18. **Delivery**. Delivery of all plans and drawings referred to in this Work Letter shall be by commercial messenger service or personal hand delivery, unless otherwise agreed by Landlord and Tenant.

LANDLORD:

By: **LANDLORD: HONG KONG GARDEN, INC**
Name: _____
Title: PRESIDENT
Date Signed: _____

TENANT:

COUNTY OF LOS ANGELES,
a body politic and corporate

By:_____
Name: Carlos E. Marquez
Title: Deputy Director of Real Estate
Date Signed: _____

ADDENDUM A To Landlord's Work Letter

BASE BUILDING IMPROVEMENTS

Landlord has constructed (or will construct) the Building to include the following:

(a) The Building shell and exterior, including perimeter window frames, mullions and glazing in good condition;

(b) The core area, including mechanical, electrical, sprinkler, plumbing, life safety, heating, air conditioning, ventilation and structural systems within the Building core, stubbed out to the face of the core wall at locations determined by Landlord;

(c) Men's and women's toilet rooms, including necessary plumbing fixtures, ceramic tile floors, accessories, ceilings and lighting, with running hot and cold water;

(d) Unpainted exterior dry wall or lath and plaster covering the exposed side of all exposed core walls, core and perimeter columns and the interior exposed side of all exterior building wall areas except at and under windows;

(e) Public stairways;

(f) Passenger and freight elevators;

(g) Parking facilities;

(h) Ground floor lobby;

(i) Finished elevator lobbies (with carpet, lights, finished walls and ceiling);

(j) Exterior plazas and landscaping;

(k) Loading dock and/or area;

(l) Drinking fountains at the core;

(m) Electrical/telephone closet with not less than seven watts per square foot of rentable area of normal power in the floor electrical closet;

(n) Conduit access sufficient for Tenant's electrical wiring (no additional improvement to increase conduit access will be furnished by Landlord unless there is not sufficient riser space as required for a 1.5" diameter signal cable from the Building main telecommunication vault to the telephone closets on floors _____, in which case Landlord, at no cost to Tenant and without deduction from the Tenant Improvement Allowance, shall cause such riser space to be made available to Tenant, and provided further that Tenant shall be responsible for the cost for removing the riser floor seal at each floor and the patching of each seal after installation of Tenant's cable);

(o) Two 208/120 and one 480/277 volt panels connected to the Building power system;

(p) Mechanical equipment room with ducted mechanical exhaust system;

(q) Concrete floors with trowelled finish, level to specified tolerances and designed to support a minimum live load of 50 pounds per square foot and a partition load of 20 pounds per square foot;

(r) Standard window coverings;

(s) Primary HVAC duct for cooling and primary HVAC duct for heating (heating is for perimeter zone only) to loop from the mechanical equipment room around the building core;

(t) Hot and cold air loops located within the Premises;

(u) Primary fire sprinkler distribution, including secondary piping and sprinkler heads as required for the unoccupied Premises;

(v) Primary fire-life safety enunciation system "backbone" and panels suitable for Tenant's secondary distribution;

(w) Access at panels in the service core for distribution of Building requirements electrical power (initially 120/208 V for power and 277V for fluorescent lighting) up to the limits permitted under applicable law at the time the Building receives the initial temporary certificate of occupancy for the Building; and

(x) Gypsum board on the service core walls, columns and sills in the Premises.

ADDENDUM B To Landlord's Work Letter

TENANT IMPROVEMENTS

Tenant improvements shall include:

(a) Tenant ceilings and lighting;

(b) Floor finish in the Premises (except elevator lobbies and public corridors on multi-tenant floors and toilet rooms);

(c) Interior finishes of any kind within the Premises (except elevator lobbies and public corridors on multi-tenant floors and core area toilet rooms);

(d) Interior partitions, doors and hardware within the Premises;

(e) Terminal boxes and reheat coils or other HVAC or air distribution devices to or within the Premises;

(f) As applicable, Tenant's furniture, fixtures and equipment, including telephones, computers and cabling therefor;

(g) Distribution of electrical services, plumbing services and sprinklers from the core to the Premises, and domestic hot water heater and associated hot water piping;

(h) Any and all signs for Tenant and the power therefor;

(i) Security, fire and life-safety systems throughout the Premises, including exit signs, intercoms and extinguishers;

(j) Additional and/or above standard electrical capacity; and

(k) Fiber optic access.