County of Los Angeles
CHIEF EXECUTIVE OFFICE
Kenneth Hahn Hall of Administration
500 West Temple Street, Room 713, Los Angeles, California 90012
(213) 974-1101
http://ceo.lacounty.gov

WILLIAM T FUJIOKA
Chief Executive Officer

Board of Supervisors
GLORIA MOLINA
First District

MARK RIDLEY-THOMAS
Second District

ZEV YAROSLAVSKY
Third District

DON KNABE
Fourth District

MICHAEL D. ANTONOVICH
Fifth District

December 4, 2012

ADOPTED
BOARD OF SUPERVISORS
COUNTY OF LOS ANGELES

13 December 4, 2012

SACHI A. HAMAI
EXECUTIVE OFFICER

The Honorable Board of Supervisors
County of Los Angeles
383 Kenneth Hahn Hall of Administration
500 West Temple Street
Los Angeles, CA 90012

Dear Supervisors:

GRAND AVENUE PROJECT-PHASE IIB
APPROVE THE REVISION TO THE PROJECT SCOPE AND
OTHER RELATED ACTIONS
ALL DISTRICTS) (3 VOTES)

SUBJECT

Approval of the recommended actions will modify the Grand Avenue Project-Phase IIB Scope of Development to allow for the Grand Avenue L.A., LLC (previously known as The Related Companies, L.P.) to proceed with construction of the Grand Avenue Project–Phase IIB, a mixed-use development on Parcel M-2, owned by the CRA/LA, a Designated Local Authority (previously known as the Community Redevelopment Agency of the City of Los Angeles), in the Bunker Hill Redevelopment Project Area consisting of 20-story apartment building with 271 rental units, including 56 units of affordable rate housing, parking, and plaza level retail space for restaurant use, and related actions necessary for the implementation of Grand Avenue Project-Phase IIB.

IT IS RECOMMENDED THAT THE BOARD:

1. Acting as a responsible agency, find that the recommended actions are within the scope of the Grand Avenue Project in the previously certified Final Environmental Impact Report and Addendum;

2. Approve the proposed revision to the Scope of Development of the Grand Avenue Project-Phase IIB to allow for adjustments to the prior approvals to facilitate the financing plan, construction, and operation of a mixed-use development featuring a 20-story apartment building with 271 rental units, including 56 units of affordable rate housing, parking, and plaza level retail space

for restaurant use by Grand Avenue M Housing Partners, LLC, Phase IIB Developer;

3. Approve the form and substance of the Third Amendment to the Disposition and Development Agreement among the Grand Avenue Joint Powers Authority, Grand Avenue L.A., LLC, The Broad Collection, and Grand Avenue M Housing Partners, LLC to implement the proposed revision to the Scope of Development of the Grand Avenue Project-Phase IIB, after approval as to form by County Counsel in substantially the form, and related changes;

4. Authorize the Treasurer and Tax Collector to release funds, with the concurrence of the Chief Executive Office, held for the benefit of affordable housing in the Grand Avenue Project-Phase IIB Project; and

5. Authorize the Chief Executive Officer to execute conforming documents and take other actions consistent with implementation of these approvals.

PURPOSE/JUSTIFICATION OF RECOMMENDED ACTION

The recommended actions seek the Board's approval of a proposed revision to the Scope of Development, and approval of the terms of a Third Amendment to the Disposition and Development Agreement (DDA), first approved in 2007, to allow for the construction and operations of a mixed-use development on Parcel M-2, located at 237 South Grand Avenue, in the Bunker Hill Redevelopment Project Area. A site plan of the proposed residential tower on Grand Avenue is depicted in Attachment A.

Background

The Grand Avenue Joint Powers Authority (Authority) was created in September 2003 through a Joint Powers Agreement, between the County of Los Angeles (County) and the former Community Redevelopment Agency for the City of Los Angeles (CRA), now the CRA/LA, a Designated Local Authority (successor to the Community Redevelopment Agency of the City of Los Angeles) and is a separate legal entity, which selected The Related Companies, L.P. (Developer) as the developer for the Grand Avenue Project in September 2004 after a public process.

In February 2007, August 2010, and May 2011, the Board approved various actions relative to the phased development of the Project. Among those actions was the approval, in form and substance, of the First and Second Amendments to the DDA (Amended DDA) between the Authority and the Developer, which: 1) outlined the terms and conditions for development and lease of the Bunker Hill Properties owned by the

County and CRA/LA; 2) approved the change in Scope of Development to permit construction of the Broad Museum as Grand Avenue Project-Phase IIA; and 3) divided the remaining Grand Avenue Project, Phase II into Phases IIB and IIC.

The Amended DDA requires consent by the City of Los Angeles (City), CRA/LA, County, and Authority to make any change in the Scope of Development. The City and CRA/LA have scheduled these matters at their meetings on November 28 and 29, 2012, respectively. The Authority is scheduled to consider the Amended DDA and other related implementing actions at a special meeting set for December 10, 2012.

Change in Scope of Development

In October 2011, the Board approved the schematic design including requirements for project amenities/elements of the Grand Avenue Project-Phase IIB (Phase IIB Project), Parcel M-2 owned by CRA/LA. In accordance with the Amended DDA, the schematic design includes residential tower and retail (restaurant) development on Parcel M-2 located south of General Thaddeus Kosciuszko Way (GTK Way). The design of the Phase IIB Project is intended to complement the Broad Museum and allows for a plaza surrounding the residential tower to connect with the GTK Way plaza.

The Phase IIB Project Scope of Development will be amended to reflect the final breakdown of units, parking, and retail space on Parcel M-2. The proposed revised plans for the 229,000 square foot Phase IIB Project reflect changes, since the October 2011 Board approval of schematic design plans, to increase from a 19-story to a 20-story residential tower above three levels of parking extending from the grade at Lower Grand Avenue to the level of Upper Grand Avenue. The parking will not be visible to pedestrians on Upper Grand Avenue or the proposed GTK Way plaza.

The revised plans for the residential tower, with construction anticipated to begin in December 2012, has increased from 258 residential rental units to 271 residential rental units, including 58 studios, 111 one-bedroom, and 47 two-bedroom apartments. Increasing the total number of units since the October 2011 review of the Phase IIB Project has also increased the affordable unit count from 52 to 56, including one manager's unit. Grand Avenue L.A., LLC has been able to provide deeper affordability on the housing units than required under the terms of the DDA. In accordance with the Amended DDA, 20 percent (56 units including one manager's unit) will be restricted through a 55-year covenant for rental to low- and very low-income households. The affordable units include 9 restricted to 40 percent area median income; 46 units restricted to 50 percent area median income using Tax Credit Allocation Committee standards; and one manager's unit. Effective December 1, 2011,

the California Tax Credit Allocation Committee range of affordable rents, for projects placed in service on or after December 1, 2011, reflect the affordable rent ranges for the 40 percent units would be $591 to $759 depending on the size of the unit and $738 to $948 for 50 percent units. The remaining 80 percent of the residential units will be rented at market rates. Unit sizes will vary from 530 to 670 square-feet for studios, 740 to 900 square-feet for one-bedroom units, and 950 to 1,404 square-feet for two-bedroom units. Three penthouse units will range in size from 1,450 to 1,890 square-feet.

Residential amenities will include a private pool, dog run, barbeque, and deck area on the ground floor; a rooftop garden, including a gathering space and large community room on the 20th floor; a gym, yoga room, media room, and conference room all located on the ground floor with views of the public plaza or private pool area. In addition, 5,500 square-feet of indoor restaurant space plus approximately 1,750 square-feet of outdoor restaurant patio area will be located on the ground level affording views of surrounding Grand Avenue attractions.

The landscape concept provides for a variety of outdoor functions that include seating areas, barbecue zones, and water features. The residential tower façade will be precast and texturally similar and complementary to the design of the adjacent Broad Museum being constructed just north of the Phase IIB Project site.

The residential tower and Broad Museum will eventually be connected by way of a public plaza, which bridges GTK Way at the level of Upper Grand Avenue. This public plaza will link buildings with Grand Avenue and its enhanced streetscape, wider sidewalks, and cultural and retail activity.

Additionally, there are scope changes to provide landscape into the space between the Promenade Residential Tower, the Grand Avenue streetscape, and the Hope Street sidewalk. Adjacent to the Phase IIB Project on the south side is the Promenade Residential Tower. To address the visual appearance between the two residential towers, the Phase IIB Project will include installation of landscaping, lighting, and fencing to this easement area. The recommended design guideline change in the Hope Street sidewalk requires a width of 10 feet rather than 15 feet, with the balance available for landscaping, Standard Urban Stormwater Mitigation Plan purposes, and public access to the Phase IIB and Phase IIC Projects. The recommended change to Grand Avenue streetscape will allow for a turn-out/curb cut for passenger loading and unloading in front of the Phase IIB Project.

Third Amendment to the Disposition and Development Agreement

The Third Amendment to the DDA (Attachment B) will incorporate the revision to the Scope of Development and will document the terms and conditions for the mixed-use residential tower to be constructed and operated. Additional changes allow for financing during construction by a tax creditor investor and consistency of the Grand Avenue Project-Phase IIA and Phase IIB Projects construction budget reviews.

A number of the changes under the Third Amendment to the DDA are technical in nature and intended to allow Grand Avenue L.A., LLC to assign its development and ownership rights in the Phase IIB Project; ensures that there are sufficient guarantees during construction of the development; ensures the protection of the Authority's rights and remedies in both the affordable and market rate developments; and provides a means for the Authority to ensure the property is well-managed, insured, and maintained during the 99-year ground lease period. The restructuring recognizes the various hierarchy of rights between and among the lenders, investors, and leaseholders.

These changes ensure that all of the developers and owners provide reasonable warranties and covenants consistent with their level of responsibility or ownership and address cross-default issues and investor rights and remedies. The Third Amendment to the DDA also changes the net worth requirement for The Related Companies as a guarantor for the Phase IIB Project, from $500 million decreased to $200 million. The original $500 million was set based on the construction costs associated with the Phase I development on Parcel Q. Given that Phase IIB is a much smaller project with a total estimated construction cost of $119 million, the $200 million net worth is considered a more reasonable requirement.

The proposed estimated $119 million Phase IIB Project will be funded with 4 percent tax credit equity provided by Boston Financial, tax exempt bonds issued by the City of Los Angeles and purchased by Citibank, and investment from the Authority for affordable housing in the amount of $13.8 million. The Authority's investment is from a $7.7 million payment, plus interest, from the Broad Collection in connection with Grand Avenue Project-Phase IIA (Parcel L) and a $5.9 million loan of Low Moderate Income Housing Trust Funds provided to the Authority by the CRA/LA in accordance with the original DDA and Conveyance and Funding Agreement. Additional equity in the project comes in the form of a letter of credit from STERS Ohio for $21 million held to guaranty repayment on the bonds, which mature seven years after the Phase IIB Project is placed in service. Financing on the $22.5 million affordable component of the Phase IIB Project is uniquely structured with little permanent debt except the residual

receipt loan from the Authority and a loan of the Authority's $7.9 million grant funds through an affiliate of the Related Companies.

Under the Third Amendment to the DDA, Grand Avenue L.A., LLC will assign its rights in the Phase IIB Project to Grand Avenue M Housing Partners, LLC (the Affordable Housing Developer). The Affordable Housing Developer will construct the proposed Phase IIB Project on the Grand Avenue Project-Phase IIB Parcel M-2. Grand Avenue M Housing Partners, LLC, whose managing member is Related California Urban Housing, LLC, is a single-purpose entity. The affordable housing tax credit equity provider, Boston Financial, will be admitted as a non-managing member to the Grand Avenue M Housing Partners, LLC, upon funding of the initial installment of its equity contribution to the affordable housing development and will receive 99.99 percent share of the Grand Avenue M Housing Partners, LLC.

In order to accommodate the separate economic interests and requirements of the equity investor in the market rate units and the tax credit investor in the affordable units, Phase IIB Project's market rate and affordable components will be separately owned and operated. Accordingly, upon completion of construction of the Phase IIB Project, Grand Avenue M Housing Partners, LLC will assign and convey fee interest in the market rate units and sub-ground leasehold interest in the market rate parcel to Grand Avenue M Urban Housing, LLC, a California limited liability company. The sole member of the market rate owner, Grand Avenue M Urban Housing, LLC, is Related California Urban Housing, LLC, who is also the managing member of the Affordable Housing Developer.

To accomplish the separation of the sub-ground leasehold estate, Grand Avenue L.A., Inc., is processing an air rights subdivision of Parcel M-2 creating separate legal parcels for the affordable and market rate Projects. The parcel for the affordable Phase IIB Project will consist of the 56 affordable units and the market rate parcel will consist of the remaining 215 units, 100 percent of the common area, the parking garage, and all the retail space in the Phase IIB Project. A separate agreement between Grand Avenue M Housing Partners, LLC and Grand Avenue M Urban Housing, LLC will set forth the rights and responsibilities of each party for building maintenance and operations. This separate agreement is one of the many ancillary documents the Authority is required to review and approve as part of this transaction.

It is recommended that the Board approve the revisions to the Grand Avenue Project-Phase IIB Scope of Development and related documents to facilitate the objectives of the Grand Avenue Project for Phase IIB.

FISCAL IMPACT/FINANCING

The proposed Phase IIB Project's estimated cost of $119 million has been approved for tax-exempt private activity volume cap authority from the California Debt Limit Allocation Committee. The City will issue tax-exempt obligations to Citibank, N.A. and will use the proceeds of those obligations to make a loan to the Affordable Housing Developer. The loan will be secured by a first lien deed of trust encumbering the Affordable Housing Developer's sub-ground leasehold interest. As a condition to the loan, the Affordable Housing Developer will provide to Citibank a letter of credit in the approximate amount of $21.9 million to satisfy Citibank's minimum equity investment requirement.

In addition to the loan described above, there are two additional funding sources for the proposed Phase IIB Project. The Authority will make a loan to the Affordable Housing Developer in the amount of $5.9 million from the funds received by the Authority from the CRA/LA for this purpose. In addition, there will be a grant in the approximate amount of $7.9 million. This grant is comprised of the $7.7 million, plus an estimated $200,000 in interest, paid to the JPA by Mr. Eli Broad's sources when the Museum was approved as Phase IIA and has been held in trust by the County Treasurer and Tax Collector for the benefit of affordable housing on the balance of Grand Avenue Project-Phase II (Parcels L and M-2) following construction of the Museum on Parcel L.

Rents on the market rate units are priced around $3.37 a square foot, comparable to rents for other luxury tower projects in Downtown Los Angeles. Although the Phase IIB Project is estimated to have higher operating costs as a luxury building, the CRA/LA's review finds the cash flow estimates reasonable and can meet the debt coverage ratio required by the lenders. The Phase IIB Project complies with typical underwriting standards and the developer fee is tied to a 4 percent return on cost (estimated at $4.5 million) which the CRA/LA finds acceptable when considering the risk factors and holding costs

FACTS AND PROVISIONS/LEGAL REQUIREMENTS

The attached Amendment to the DDA has been reviewed as to form by County Counsel.

The Authority and CRA/LA previously granted a short extension to the deadline in the DDA for Outside Construction Start Date and related requirements of Phase IIB Project from October 1, 2012 to December 26, 2012.

ENVIRONMENTAL DOCUMENTATION

In February 2007, acting as a responsible agency, the Board certified the Grand Avenue Project Environmental Impact Report (Final EIR) as prepared and certified by the Authority as lead agency for the Phase IIB Project, a mixed-use development on Parcels Q and W-2, L and M-2, and potentially W-1, along with a revitalized and expanded civic park.

In August 2010, acting as a responsible agency, the Board certified the Addendum to the previously certified Final EIR in connection with the First Amendment to the DDA and a change in the Scope of Development to permit the Museum improvements on Parcel L.

In May 2011, acting as a responsible agency, the Board approved a Second Amendment to the DDA, which addressed a less dense Scope of Development on Parcels L and M-2 owned by the CRA/LA and an acceleration of construction of previously approved public improvements to be part of the Parcel L Museum construction schedule. No further environmental review was required for the amended and less dense Scope of Development as the amended scope was within the scope of the previously certified Final EIR and Addendum.

The proposed changes in the Scope of Development on Parcel M-2 presented in the Third Amendment to the DDA with respect to Phase IIB are within the scope of the previously certified Final EIR and Addendum. No further environmental review is required for the recommended actions based on the Grand Avenue Project record because since certification of the Final EIR and Addendum there has been no change to the Grand Avenue Project or substantial changes in circumstances or new information that would warrant subsequent environmental analysis in accordance with the California Environmental Quality Act (CEQA), including but not limited to Public Resources Code section 21166 and State CEQA Guidelines sections 15162, 15163, and 15164. The mitigation measures and related conditions of approval applicable to the Phase IIB Project have been reviewed and will be monitored for compliance.

CONCLUSION

Upon approval of the recommendations, please return one adopted copy of this Board letter to the Chief Executive Office, Capital Projects.

Respectfully submitted,

WILLIAM T FUJIOKA
Chief Executive Officer

WTF:RLR:DJT
DKM:mda

Attachments

c: Executive Office, Board of Supervisors
County Counsel
The Los Angeles Grand Avenue Authority
CRA/LA a Designated Local Authority

ATTACHMENT A: Site Location
Parcel M-2
237 South Grand Avenue

<u>Bunker Hill Redevelopment Project Area</u>

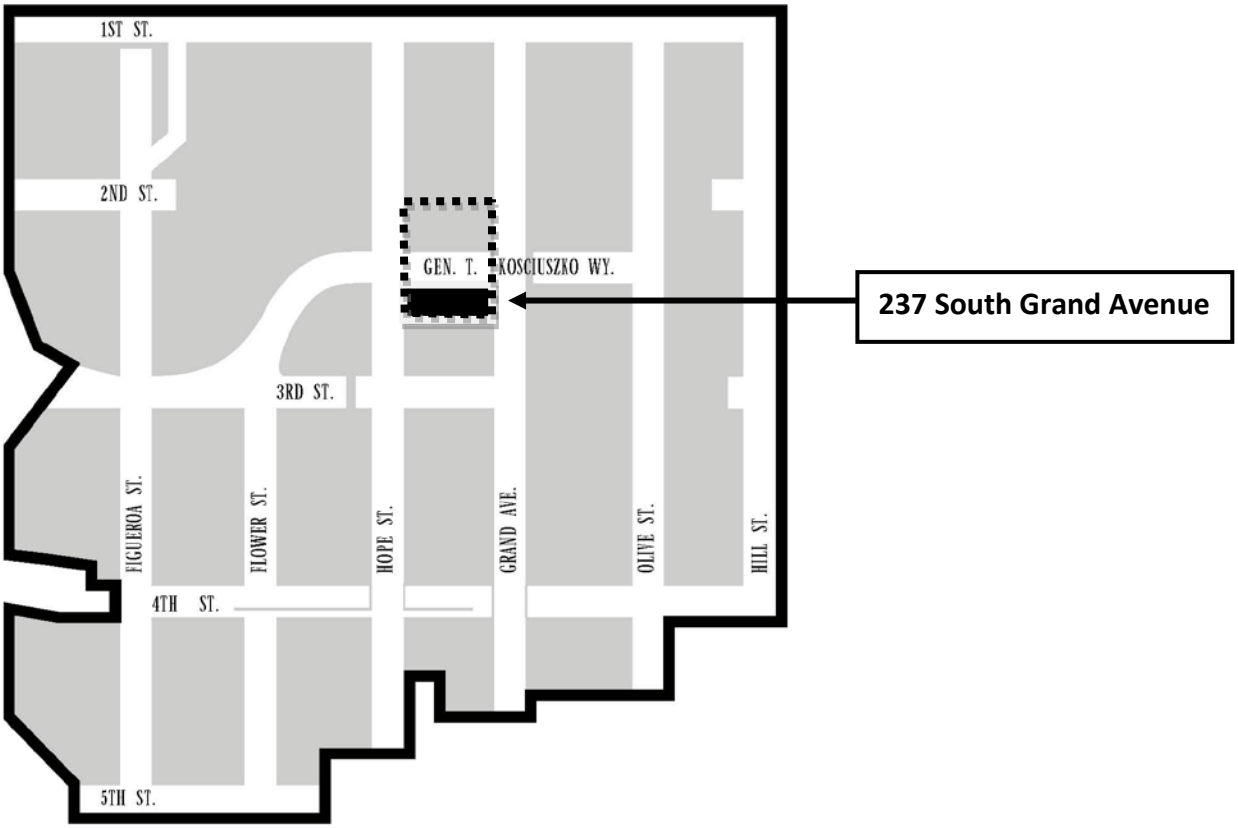

Site aerial, looking west

ATTACHMENT B

THIRD AMENDMENT TO DISPOSITION AND DEVELOPMENT AGREEMENT

BY AND AMONG

THE LOS ANGELES GRAND AVENUE AUTHORITY,

GRAND AVENUE L.A., LLC,

THE BROAD COLLECTION, AND

GRAND AVENUE M HOUSING PARTNERS, LLC

THIRD AMENDMENT TO DISPOSITION AND DEVELOPMENT AGREEMENT

(GRAND AVENUE)

THIS THIRD AMENDMENT TO DISPOSITION AND DEVELOPMENT AGREEMENT ("**Amendment**") is entered into as of [_____, 2012], by and among THE LOS ANGELES GRAND AVENUE AUTHORITY, a California joint powers authority ("**Authority**"), GRAND AVENUE L.A., LLC, a Delaware limited liability company ("**Developer**"), THE BROAD COLLECTION, a California nonprofit public benefit corporation ("**Phase IIA Developer**"), and GRAND AVENUE M HOUSING PARTNERS, LLC, a California limited liability company ("**Phase IIB Developer**"), with reference to the following facts and objectives:

RECITALS

A. Authority, Developer and Phase IIA Developer are parties to that certain Disposition and Development Agreement (Grand Avenue) dated as of March 5, 2007 (the "**Original DDA**"), as amended by that certain First Amendment to Disposition and Development Agreement (Grand Avenue) dated as of August 23, 2010 (the "**DDA First Amendment**"), and that certain Second Amendment to Disposition and Development Agreement (Grand Avenue) dated as of May 31, 2011 (the "**DDA Second Amendment**"). Capitalized terms used and not otherwise defined herein shall have the meaning ascribed to such terms in the Original DDA, the DDA First Amendment and the DDA Second Amendment, as applicable. The Original DDA as amended by the DDA First Amendment, the DDA Second Amendment and this Amendment is referred to herein as the "**Amended DDA**."

B. The DDA First Amendment, among other things, amended the Scope of Development for the Project to provide that Phase IIA Developer will construct Phase IIA to include the Museum. The DDA Second Amendment, among other things, amended the Scope of Development for the Project to provide that Developer will construct Phase IIB. Pursuant to Section 4.2 of the DDA Second Amendment, "Phase IIB will consist of a residential tower of approximately 20 stories, to be constructed on Parcel M-2, containing approximately 260 rental units; 20% of the total units in Phase IIB shall be rental Affordable Housing Units. Phase IIB will include a parking garage containing approximately 280 parking spaces for the renters of the non-Affordable Housing Units in Phase IIB. Per Section 707 of the Original DDA, the Affordable Housing Units in Phase IIB shall be reserved for occupancy by Sixty Percent Households and, in Developer's sole discretion, by Very Low Income Households and/or Extremely Low Income Households. Retail Improvements, consisting of between approximately 7,000 and 19,500 square feet, will be constructed on Grand Avenue as part of Phase IIB."

C. Developer has requested that the aforementioned Scope of Development for Phase IIB be amended as follows to reflect the updated plans for Phase IIB: the residential tower will include approximately 271 rental units (rather than 260), with 56 of such rental units (including one manager's unit) constituting Affordable Housing Units reserved for occupancy by Sixty Percent Households and, in Phase IIB Developer's (rather than Developer's) sole discretion, by Very Low Income Households and/or Forty Percent Households (rather than Extremely Low Income Households). Developer has requested that Authority confirm that Retail Improvements

consisting of an approximately 5,500 square foot indoor restaurant space plus approximately 1,750 square feet of outdoor restaurant patio area (totaling approximately 7,250 square feet of restaurant space) complies with the Scope of Development for Phase IIB contained in the DDA Second Amendment.

D. Developer, Phase IIA Developer and Phase IIB Developer have requested (i) various amendments to the Scope of Development, as set forth herein, and (ii) an updated Schedule of Performance that reflects prior actions, as set forth herein.

E. An amendment to the Scope of Development requires approval of the Governing Entities as provided in Section 402 of the Original DDA. Execution of this Amendment by the Authority, the CRA, and the County shall constitute approval by such entities respectively. The Amendment of the Original DDA and the Scope of Development in order to further the development of Phase IIB is in the vital and best interests of the City and the County and the health, safety, morals and welfare of their residents, and consistent with the public purposes and provisions of the applicable federal, state and local laws and requirements, and, in particular, the Community Redevelopment Law of the State of California Health and Safety Code Section 33000 et seq.

F. Developer has determined that in order to obtain federal low income housing tax credits ("**Tax Credits**") and further finance construction of Phase IIB, it is necessary for Developer to form the Phase IIB Developer, which is a single-purpose limited liability company, with non-managing investor members, to develop Phase IIB.

G. Promptly following the mutual execution of this Amendment, Authority and Phase IIB Developer will enter into a sub-ground lease with respect to the Phase IIB Parcel in the form attached hereto as Exhibit "A" (the "**Phase IIB Parcel Ground Lease**").

H. Pursuant to that certain Grand Avenue Project-Phase IIB Parcel Assignment and Assumption Agreement dated as of _____, 2012 (the "**Phase IIB Assignment Agreement**"), Developer has assigned to Phase IIB Developer its rights and obligations under the Amended DDA with respect to the Phase IIB Parcel, and Phase IIB Developer has assumed such rights and obligations so that Phase IIB Developer can develop the Phase IIB Improvements under the Amended DDA. Developer and Phase IIB Developer entered into the Phase IIB Assignment Agreement in anticipation of this Amendment being executed by the parties hereto. As set forth in Section 6(a) below, execution of this Amendment by Authority and the CRA will evidence their consent to the assignment and assumption provided for in the Phase IIB Assignment Agreement, which consents satisfy a condition precedent to the effectiveness of the Phase IIB Assignment Agreement.

I. Developer and Phase IIB Developer have requested that Authority document, in this Amendment, the assignment by Developer of its rights with respect to the Phase IIB Parcel to the Phase IIB Developer pursuant to the Phase IIB Assignment Agreement, and the consent of the Authority and the CRA thereto.

J. Developer has further determined that in order to finance construction of Phase

IIB, it is necessary for Phase IIB Developer, no later than the issuance of a Certificate of Completion for the Phase IIB Improvements, to process a subdivision of the Phase IIB Parcel into multiple air-rights parcels (the **"Subdivision"**) through Recordation of a tract map (the "**Tract Map**"), pursuant to which the parcels listed on Schedule 1 attached hereto will constitute the "**Phase IIB Affordable Parcels**" and the parcels listed on Schedule 2 attached hereto will constitute the "**Phase IIB Market Rate Parcels**." In connection therewith, Developer has formed a single-purpose limited liability company with Related California Urban Housing, LLC, a California limited liability company acting as the managing member, Grand Avenue M Urban Housing, LLC, a California limited liability company (the "**Phase IIB Market Rate Owner**"). Concurrent with Recordation of the Tract Map, the Phase IIB Developer, CRA and the Authority will enter into a reciprocal easement agreement with covenants and conditions establishing, among other things, easements relating to access between the Phase IIB Affordable Parcels and the Phase IIB Market Rate Parcels, and certain rights and obligations with respect to ownership and maintenance of the Phase IIB Improvements (the "**Phase IIB REA**"). Following Recordation of the Tract Map and Recordation of the Phase IIB REA, Phase IIB Developer will convey Phase IIB Developer's fee interest in the Phase IIB Market Rate Owner Improvements (as hereinafter defined) to Phase IIB Market Rate Owner, the Phase IIB Parcel Ground Lease will, by its terms, release the Phase IIB Market Rate Parcels and the Phase IIB Market Rate Parcels will be sub-ground leased by the Authority to the Phase IIB Market Rate Owner pursuant to the terms of the sub-ground lease of the Phase IIB Market Rate Parcels with the Market Rate Owner in substantially the form attached hereto as Exhibit "B" (the "**Phase IIB Market Rate Ground Lease**"), which Phase IIB Market Rate Ground Lease will provide for the profit sharing described in Section 13 below. Concurrent with conversion of the Tax Exempt Note Loan from construction to the permanent phase, the mortgages and related documents encumbering the Phase IIB Parcel, and securing the 7.7 Million Dollar Loan and the Affordable Housing Loan, will be amended to release the Phase IIB Market Rate Parcels as security for the 7.7 Million Dollar Loan and the Affordable Housing Loan.

K. Developer and Phase IIB Developer have also requested various other modifications to the Original DDA, as amended by the DDA First Amendment and the DDA Second Amendment, as more particularly set forth hereinbelow.

NOW THEREFORE, in consideration of the foregoing Recitals and for other good and valuable consideration, the receipt of which is hereby acknowledged, Authority, Developer, Phase IIA Developer and Phase IIB Developer hereby agree as follows:

1. **Recitals Incorporated by Reference.** The foregoing Recitals A through K are hereby incorporated into and made a part of this Agreement.

2. **Amendment of Definitions**.

(a) The following definitions set forth in the Original DDA and the DDA First Amendment and the DDA Second Amendment are hereby amended as follows:

(1) The definition of "**CRA**" is amended to mean CRA/LA, a designated local authority, a public body formed under Health & Safety Code Section 34173(d)(3), as successor to the Community Redevelopment Agency of the City of Los Angeles.

(2) The definition of "**CRA-Authority Leases**" is amended to include the Phase IIB Parcel CRA Ground Lease.

(3) The definition of "**Ground Lease(s)**" is amended to include the Phase IIB Parcel Ground Lease, and for purposes of Sections 107, the definition of "Mortgage," 202, 207, 602(B)(11), 801, 902(2), 1001, Article 11, Article 12, 1311, 1401 and 1402(k) of the Original DDA, the definition of Ground Lease is amended to include the Phase IIB Market Rate Ground Lease.

(4) The definition of "**Intermediate Lender**" is amended to mean Urban Funding, Inc., a California corporation.

(5) The definition of "**Mortgage**" is amended to mean any mortgage, deed of trust, pledge, encumbrance or other security interest, together with all amendments, modifications, supplements, restatements and/or replacements from time to time, granted to a lender not Affiliated with Developer, made in good faith and for fair value, encumbering all or any part of Developer's interest in this Agreement, the Ground Leases, the Project Documents, the Project or the Development Site. "Mortgage" shall not include any mortgage, deed of trust, pledge, encumbrance or other security interest granted to a lender (i) in which Developer or an Affiliate of Developer has an interest of 20% or more, or (ii) which has an interest of 20% or more in Developer or an Affiliate of Developer. Notwithstanding the foregoing, the deed of trust securing repayment of the 7.7 Million Dollar Loan and the deed of trust securing repayment of the Letter of Credit shall each constitute a Mortgage hereunder.

(6) The definition of "**Title Company**" is amended to mean a title company reasonably approved by Authority, provided that Authority expressly approves of First American Title Insurance Company, Chicago Title and Old Republic Title.

(b) The following definitions are added to Section 110 of the Original DDA:

(1) "**7.7 Million Dollar Grant Agreement**" is defined in Section 7(b).

(2) "**Administrative Member**" means a Person with the direct or indirect power to Control another Person.

(3) "**Forty Percent Household**" means a household with an adjusted income that does not exceed forty percent (40%) of the Median Income, adjusted for actual household size.

(4) "**Investor**" means the non-managing member(s) of Phase IIB Developer.

(5) "**Letter of Credit**" that irrevocable standby letter of credit issued by [BANK] in the approximate amount of [$21,000,000] securing a portion of the Tax Exempt Note Loan.

(6) "**Person**" means an individual, partnership, trust, corporation, firm or other entity.

(7) "**Phase IIB Affordable Parcels**" is defined in Recital J.

(8) **"Phase IIB Agreements"** means the following agreements to which the Phase IIB Developer is a party: the Amended DDA, the Phase IIB Assignment Agreement, and the Phase IIB Parcel Ground Lease.

(9) "**Phase IIB Assignment Agreement**" is defined in Recital H.

(10) "**Phase IIB Developer**" means Grand Avenue M Housing Partners, LLC, a California limited liability company.

(11) "**Phase IIB Developer Environmental Compliance Obligations**" shall have the meaning given in Section 6 hereof.

(12) "**Phase IIB Managing Member**" shall have the meaning given in Section 9.1 hereof.

(13) "**Phase IIB Market Rate Owner**" is defined in Recital J.

(14) "**Phase IIB Market Rate Parcels**" is defined in Recital J.

(15) "**Phase IIB Market Rate Ground Lease**" is defined in Recital J.

(16) "**Phase IIB Parcel CRA Ground Lease**" means a ground lease from the CRA to Authority of the Phase IIB Parcel to be entered into immediately prior to the execution and delivery of the Phase IIB Parcel Ground Lease, as a condition to the effectiveness thereof.

(17) "**Phase IIB Parcel Ground Lease**" is defined in Recital G.

(18) "**Phase IIB Market Rate Owner Improvements**" means all of the Phase IIB Improvements other than the Affordable Units and related structural elements and exterior walls. Without limiting the generality of the foregoing, the Phase IIB Market Rate Owner Improvements shall expressly include 215 Market Rate Rental Units and related tenant amenities and access areas, the Retail Improvements, and a parking garage containing approximately two hundred eighty (280) parking spaces.

(19) "**Recordation**" means recordation in the Official Records of the County of Los Angeles, California.

(20) "**Subdivision**" is defined in Recital J.

(21) "**Tax Credits**" is defined in Recital F.

(22) "**Tax Exempt Note Loan**" means that certain loan of tax exempt note proceeds from the Phase IIB Institutional Lender in the approximate original principal amount of $_____.

(23) "**Third Amendment Effective Date**" means the date that this Amendment has been executed and delivered by Authority, Developer, Phase IIA Developer and Phase IIB Developer and approved by the Governing Entities.

3. **Amendments to Scope of Development**. Effective as of the Third Amendment Effective Date, the Scope of Development attached as Exhibit "A" to the Original DDA, as amended and supplemented to date, is hereby amended and restated in its entirety by the Scope of Development attached hereto as Exhibit "C". For ease of reference, the amendments to the Scope of Development authorized hereunder are described in the remainder of this Section 3 (provided that, if any conflict arises between the terms set forth in the Scope of Development attached hereto and the terms set forth below in this Section 3, the terms set forth in the Scope of Development attached hereto shall prevail and control):

3.1 **Phase IIB Description; Phase IIA Description**. Part II(B) (a portion of Phase II Parcels L and M-2) of the Scope of Development attached to the Original DDA as Exhibit "A", as amended and restated in Section 4.2 of the DDA Second Amendment, is amended as follows: The reference to "approximately 260 rental units" is hereby amended to refer to "approximately 271 rental units"; the reference to "in Developer's sole discretion," is amended to refer to "in Phase IIB Developer's sole discretion;" and the reference to "Extremely Low Income" is amended to refer to "Forty Percent Household." In addition, the sentence reading "Retail improvements, consisting of between approximately 7,000 and 19,500 square feet, will be constructed on Grand Avenue as part of Phase IIB" is amended to state "Retail Improvements, consisting of between approximately 7,000 and 19,500 square feet, will be constructed on Grand Avenue as part of Phase IIA or Phase IIB." The Authority hereby confirms that Retail Improvements consisting of an approximately 5,500 square foot indoor restaurant space plus approximately 1,750 square feet of outdoor restaurant patio area (totaling approximately 7,250 square feet of restaurant space) complies with the Scope of Development for Phase IIB contained in the DDA Second Amendment.

3.2 **Hope Street Sidewalk Width**. A portion of Part III(L) (Sidewalk Standards) of the Scope of Development attached to the Original DDA as Exhibit "A", is amended to provide that the minimum required sidewalk width along Hope Street will be 10 feet rather than 15 feet, with the balance available for landscaping, SUSMP purposes, public access to Phase IIB and Phase IIC, and related purposes.

3.3 **Grand Avenue Streetscape – Passenger Loading**. The Grand Avenue Streetscape to be constructed by Phase IIA Developer on Upper Grand Avenue will include a turn-out/curb cut in front of the Phase IIB Parcel for passenger loading and unloading.

4. **Schedule of Performance**. The Schedule of Performance attached hereto as Exhibit "D" reflects all changes to date that the parties hereto have agreed upon and made to the Schedule of Performance attached as Exhibit "C" to the Original DDA.

5. **Certain Other Amendments Regarding Phase IIB**.

(a) A new Section (5) is hereby added to the end of Section 108 of the Original DDA: "(5) Phase IIB Developer. The "Phase IIB Developer" is Grand Avenue M

Housing Partners, LLC, a California limited liability company. Phase IIB Developer's principal office is located at 18201 Von Karman Avenue, Suite 900, Irvine, California 92612."

(b) Notwithstanding anything to the contrary contained in the Amended DDA, to the extent there is an inconsistency in the Amended DDA with respect to the rents that will be charged to tenants of the rental Affordable Housing Units, such tenants shall be charged applicable rents that do not exceed the maximum allowable rents as calculated and published by the California Tax Credit Allocation Committee (i.e., the rents charged for forty-six (46) of the Affordable Housing Units shall not exceed the maximum allowable rent for households with an adjusted income that does not exceed fifty percent (50%) of the Median Income, adjusted for actual household size, and the rents charged for ten (10) of the Affordable Housing Units (including one manager's unit) shall not exceed the maximum allowable rent for households with an adjusted income that does not exceed forty percent (40%) of the Median Income, adjusted for actual household size).

(c) With respect to Section 1003 of the Original DDA, Phase IIB Developer's obligation to take the remedial actions set forth therein shall apply only with respect to Hazardous Materials on or under the Phase IIB Parcels as a result of the actions of Phase IIB Developer or its Affiliates, contractors, agents, employees or licensees.

(d) Authority hereby reaffirms Authority's approval of the Project Documents for Phase IIB which are listed on Schedule 3 attached hereto.

(e) Deficiencies (if any) in Project Documents for Phases of the Project other than Phase IIB shall not affect Authority's approval of the Project Documents for Phase IIB.

(f) The Authority makes no representations or warranties as to the condition of the Phase IIB Parcel prior to the delivery thereof to Phase IIB Developer.

(g) Execution by the CRA, the Authority, the Developer, the Phase IIB Developer and the Phase IIA Developer, and Recordation of that certain Parking Agreement and Covenant by and among the Phase IIA Developer, the Phase IIB Developer and the Phase IIB Market Rate Owner, relating to the availability of parking spaces for tenants of Phase IIB Affordable Parcels, shall constitute compliance with Section 5.2 of the DDA Second Amendment. Execution of the Museum /Phase IIB/Phase IIC REA shall not be a condition to Commencement of Construction of Phase IIB. Execution by the CRA, the Authority, the Developer, the Phase IIB Developer and the Phase IIA Developer, and Recordation of the Public Plaza REA shall not constitute a condition precedent to the Authority's execution and delivery of the Phase IIB Parcel Ground Lease; provided, however, that mutual execution and Recordation of the Public Plaza REA shall remain a condition precedent to the issuance of any Certificate of Completion for the Phase IIA Parking Garage.

6. **Approval of Phase IIB Parcel Ground Lease, Subdivision of Phase IIB Parcel and Leasing of Phase IIB Market Rate Parcels; Continued Responsibility for Mitigation Measures.**

(a) Authority and, to the extent required under the Amended DDA, Phase IIA Developer, hereby consent to the assignment by Developer of its rights and obligations under the

Amended DDA with respect to the Phase IIB Parcel to the Phase IIB Developer in accordance with the terms of the Phase IIB Assignment Agreement.

(b) Subdivision. Authority, Developer and, to the extent required under the Amended DDA, Phase IIA Developer hereby consent to the Subdivision and Recordation of the Phase IIB REA, provided that the Subdivision shall comply with all applicable Laws including, without limitation, the Subdivision Map Act, and there shall be no conditions imposed in connection with the Subdivision that would be inconsistent with the Amended DDA. At such time during construction of the Phase IIB Improvements that Phase IIB Developer desires to cause the Recordation of the Tract Map, Phase IIB Developer shall deliver an execution copy of the Tract Map and the Phase IIB REA to the Authority and CRA for execution. Upon receipt of the Tract Map and Phase IIB REA executed by the Authority and CRA, Phase IIB Developer shall be authorized to cause the Recordation of the Tract Map and the Phase IIB REA against the CRA's fee interest in the Phase IIB Parcel, the Authority's leasehold interest in the Phase IIB Parcel and Phase IIB Developer's sub-leasehold interest in the Phase IIB Parcel, and effect the Subdivision which will result in the creation of the Affordable Housing Parcels and the Market Rate Parcels and concurrent recordation of the Phase IIB REA. Authority further agrees to execute and deliver any and all documents reasonably necessary, in the opinion of the Title Company, to cause the subordination of the Phase IIB Ground Lease to the Tract Map and the Phase IIB REA, provided that Phase IIB Developer shall indemnify and reimburse the Authority with respect to any liability or other costs or damages incurred by the Authority and arising from its obligations under any such documents.

(c) Following the Recordation of the Tract Map and the Phase IIB REA, (a) Phase IIB Developer shall convey Phase IIB Developer's fee interest in the Phase IIB Market Rate Owner Improvements to Phase IIB Market Rate Owner, (b) the Phase IIB Parcel Ground Lease will, by its terms, release the Phase IIB Affordable Parcels from the space demised thereunder, and (c) the Authority and the Market Rate Owner shall enter into the Phase IIB Market Rate Ground Lease, subject to the conditions contained in Article 11 of the Phase IIB Ground Lease (the "**Market Rate Transfer**"). Upon receipt of the executed Market Rate Parcel Ground Lease, the Phase IIB Developer shall be authorized to cause the Recordation of a memorandum of Ground Lease in connection with the Market Rate Parcel Ground Lease. Authority, Developer and, to the extent required under the Amended DDA, Phase IIA Developer hereby consent to the Market Rate Transfer and execution of the Market Rate Parcel Ground Lease.

(d) Pursuant to Section 507(4) of the Original DDA, except as otherwise expressly provided in the Original DDA (as amended by the DDA First Amendment and the DDA Second Amendment) and without limiting the continued effectiveness and application of Articles 7 and 8 thereof, upon the issuance of the Certificate of Completion for Phase IIB, the DDA shall terminate solely with respect to Phase IIB, and none of Phase IIB Developer, the Phase IIB Market Rate Owner, Authority, the City, CRA, County, nor any other person shall have any rights, remedies or controls with respect to Phase IIB that it would otherwise have or be entitled to exercise under the DDA as a result of a default in or breach of any provision of the DDA, and the respective rights and obligations of the parties with respect to Phase IIB shall be as set forth in the Phase IIB Ground Lease and the Phase IIB Market Rate Ground Lease, as applicable, and any recorded covenants or regulatory agreement concerning the Phase IIB Parcel.

(e) Notwithstanding any provision hereof, subject to the obligations of (i) Phase IIA Developer as set forth in the Amended DDA, and (ii) Phase IIB Developer as set forth in Exhibit "E" attached hereto (collectively, the "**Phase IIB Developer's Environmental Compliance Obligations**"), Developer shall remain responsible for compliance with the Project description as approved in the final EIR, the Mitigation and Monitoring Program approved as part of the certification of the EIR, and related conditions of approval adopted by the Governing Entities concurrently with approval of the Original DDA, except to the extent that such compliance is determined to have been achieved by the Phase IIA Developer or the Phase IIB Developer. Phase IIB Developer shall be responsible for compliance with the Project description as approved in the final EIR as set forth in the Phase IIB Developer's Environmental Compliance Obligations, the Mitigation and Monitoring Program approved as part of the certification of the EIR as set forth in the Phase IIB Developer's Environmental Compliance Obligations, and related conditions of approval adopted by the Governing Entities concurrently with approval of the Original DDA as set forth in the Phase IIB Developer's Environmental Compliance Obligations.

7. **Funding of Affordable Housing – Phase IIB.** Notwithstanding anything to the contrary contained in Section 4.6 of the DDA Second Amendment:

(a) The Authority hereby confirms that, in accordance with the terms of Section 4.6 of the DDA Second Amendment, the County Treasurer currently holds the 7.7 Million Dollar Payment (which payment amount includes the original $7,700,000 payment from the Phase IIA Developer plus all interest thereon while on deposit with the County Treasurer), and that the full 7.7 Million Dollar Payment will be disbursed into an escrow (on behalf of the Intermediate Lender) in accordance with the 7.7 Million Dollar Grant Agreement (as defined below), upon closing of the construction loan for Phase IIB, which closing is expected to occur on or before December 31, 2012.

(b) The 7.7 Million Dollar Grant shall be made pursuant to a grant agreement between the Authority and the Intermediate Lender in substantially the form attached hereto as Schedule 4 (the "**7.7 Million Dollar Grant Agreement**"); provided, however, that the Authority shall have no obligation to make the 7.7 Million Grant, unless the Phase IIB Developer has delivered a copy of the fully-executed 7.7 Million Loan Documents (as defined below) to the Authority, together with an explanation of any changes from the forms attached hereto, which changes shall be subject to the Authority's approval, which the Authority may withhold in its reasonable discretion. The 7.7 Million Dollar Grant Agreement shall be executed concurrent with the closing of the construction loan for Phase IIB. In accordance with Section 12.1 of the Phase IIB Parcel Ground Lease, the Authority hereby approves the form of the 7.7 Million Dollar Grant Agreement.

(c) The loan of the 7.7 Million Grant proceeds shall be made by the Intermediate Lender to the Phase IIB Developer (the "**7.7 Million Dollar Loan**") pursuant to a loan agreement, promissory note and deed of trust in substantially the forms attached hereto as Schedule 5 (the "**7.7 Million Dollar Loan Documents**"). The 7.7 Million Dollar Loan Documents shall be executed concurrent with execution of the 7.7 Million Grant Agreement, and the Intermediate Lender shall disburse the full amount of the 7.7 Million Dollar Loan to the Phase IIB Developer upon closing of the construction loan for Phase IIB. In accordance with

Section 12.1 of the Phase IIB Parcel Ground Lease, the Authority hereby approves the forms of the 7.7 Million Loan Documents. The proceeds of the 7.7 Million Dollar Loan shall be used solely to pay costs specified on a settlement statement certified by the Phase IIB Developer and approved by the Authority in writing prior to the closing of the construction loan for Phase IIB.

(d) The original principal amount of the Affordable Housing Loan will be $5,995,000. As of the date of this Amendment, Phase IIB Affordable Housing Funds in an amount equal to $5,626,000 are currently held by the County Treasurer for the benefit of the Authority. Phase IIB Affordable Housing Funds in an amount equal to $369,000 will be deposited by the CRA with the County Treasurer, for the benefit of the Authority, no later than January 31, 2013.

(e) The Phase IIB Affordable Housing Funds, to the extent actually received by/made available to Authority by CRA, shall be loaned by the Authority to the Phase IIB Developer as a residual receipts loan for Affordable Housing in Phase IIB pursuant to the terms of a loan agreement, promissory note, deed of trust, and regulatory agreement in substantially the forms attached hereto as Schedules 6.A, 6.B, 6.C, and 6.D (the "**Affordable Housing Loan Documents**"). All payments made to the Authority by the Phase IIB Developer under the Affordable Housing Loan Documents shall be applied to Affordable Housing in the Project, and after all Affordable Housing in the Project has been fully funded, the payments under the Affordable Housing Loan Documents shall be paid to the City for other affordable housing in downtown Los Angeles. If Phase IIB does not commence construction in accordance with the Schedule of Performance, Authority shall allocate the Phase IIB Affordable Housing Funds to Affordable Housing in Phase I (and if Phase I does not commence construction in accordance with the Schedule of Performance, the Phase IIB Affordable Housing Funds shall be paid to the City (as the successor housing agency) for other affordable housing in downtown Los Angeles) in accordance with the Laws. In accordance with Section 12.1 of the Phase IIB Parcel Ground Lease, the Authority hereby approves the form of the Affordable Housing Loan Documents.

(f) Upon closing of the construction loan for Phase IIB, the Authority shall disburse loan proceeds in an amount equal to $5,626,000 to, [Wells Fargo], the Institutional Lender that will disburse the construction loan to the Phase IIB Developer for development of Phase IIB (the "**Phase IIB Institutional Lender**"), subject to and in accordance with the terms and conditions of the Affordable Housing Loan Documents. Within fifteen (15) business days after the Authority's receipt of the deposit of the remaining $369,000 in Affordable Housing Loan funds, the Authority shall disburse such funds to the Phase IIB Institutional Lender, subject to and in accordance with the terms and conditions of the Affordable Housing Loan Documents. The Phase IIB Institutional Lender will disburse the Phase IIB Affordable Housing Funds to the Phase IIB Developer in accordance with the terms of the Affordable Housing Loan Documents.

8. **Phase IIB Developer Representations, Warranties and Covenants.** Section 1501 of the Original DDA shall be inapplicable with respect to Phase IIB Developer. The following Section 1504 (which shall be inapplicable with respect to Developer and Phase IIA Developer) is hereby added to the end of Article 15 of the Original DDA with respect to Phase IIB Developer:

"1504 **Representations, Warranties and Covenants of Phase IIB Developer**.

Phase IIB Developer represents, warrants and covenants to the Authority, as of the date hereof and as of the date of the closing of the construction loan for Phase IIB, as follows:

(1) Organization. Phase IIB Developer is a California limited liability company, duly formed, validly existing under the laws of the State of California and qualified to conduct business in the State of California, with full power and authority to conduct its business as presently conducted and to execute, deliver and perform its obligations under the Phase IIB Agreements. Each of the entities that are members and/or managers of Phase IIB Developer are duly formed, validly existing under the laws of their respective states of formation and qualified to conduct business in the State of California, with full power and authority to conduct their businesses as presently conducted.

(2) Authorization. Phase IIB Developer has taken all necessary action to authorize its execution, delivery and, subject to the conditions set forth herein, performance of its obligations under this Amendment and the other Phase IIB Agreements. Upon such execution and delivery, this Amendment shall constitute a legal, valid and binding obligation of Phase IIB Developer, enforceable against it in accordance with its terms.

(3) No Conflict. The execution, delivery and performance of this Amendment by Phase IIB Developer does not and will not conflict with, or constitute a violation or breach of, or a default under, (a) the articles of organization, operating agreement, and/or other formation documents of Phase IIB Developer, (b) any applicable law, rule or regulation binding upon or applicable to Phase IIB Developer, or (c) any material agreements to which Phase IIB Developer is a party.

(4) No Litigation. There is no existing or, to Phase IIB Developer's knowledge, pending or threatened litigation, suit, action or proceeding before any court or administrative agency affecting Phase IIB Developer that would, if adversely determined, adversely affect Phase IIB Developer, the Phase IIB Improvements or Phase IIB Developer's ability to perform its obligations hereunder or under the other Phase IIB Agreements.

(5) No Defaults. Phase IIB Developer is not in default in respect of any of its obligations or liabilities pertaining to the Phase IIB Parcels, nor is there any state of facts, circumstances, conditions, or events which, after notice, lapse or time, or both, would constitute or result in any such default. Phase IIB Developer is not and, at the time of execution of this Amendment, will not be in default with respect to any agreements, obligations or liabilities that could adversely affect Phase IIB Developer’s ability to perform its obligations hereunder.

(6) Financial Statements. Phase IIB Developer has previously delivered to Authority or made available for inspection by Authority and its representatives true and accurate current financial statements with respect to Related, which financial statements were prepared in accordance with generally accepted accounting principles and fairly and accurately represent the financial condition of Related as of the date or dates thereof. No material adverse change has occurred in the financial condition of Related between the date or dates of such financial statements and the date hereof. At the request of Authority from time to time, Phase IIB Developer shall make available for inspection by Authority such additional

financial statements and information concerning the financial condition of Phase IIB Developer and Related as Authority shall reasonably request.

(7) Phase IIB Parcel Ground Lease. Phase IIB Developer shall enter into the Phase IIB Parcel Ground Lease with Authority following execution of the Phase IIB CRA Ground Lease by CRA and Authority but in no event prior to the closing of the construction loan for Phase IIB and in no event later than the time required therefor by the Schedule of Performance."

9. **Phase IIB Transfer Restrictions; Additional Rights of Investor**.

9.1 **Representations of Phase IIB Developer**. Phase IIB Developer represents that it is entering into this Amendment for the purposes of the redevelopment of the Phase IIB Parcel in accordance with the Amended DDA and not for speculation in land holding. Phase IIB Developer further recognizes that, in view of the importance of the redevelopment of the Development Site to the general welfare of the community, the qualifications and identity Phase IIB Developer's managing member (i.e., an affiliate of Related) (the "**Phase IIB Managing Member**") are of particular concern to Authority. Among such qualifications are the financial resources of Related and the reputation and experience of Related and its principals and personnel in the development of world class projects. It is because of such qualifications and identity that Authority is entering into this Amendment. Therefore, no voluntary or involuntary successor-in-interest of Phase IIB Developer shall acquire any rights or powers under the Amended DDA or in the Phase IIB Parcels except as specifically set forth herein.

9.2 **Transfers of Interests in Phase IIB Developer; Replacement of Related Key Personnel**. With respect to Phase IIB only, Section 906 of the Original DDA is hereby amended and restated in its entirety to provide as follows:

"906 **Transfers of Interests in Phase IIB Developer; Replacement of Related Key Personnel**.

(1) Phase IIB Developer acknowledges that Authority has relied on the Phase IIB Developer's Amended and Restated Operating Agreement dated _____, 2012 ("**Phase IIB Developer's Operating Agreement**") in entering into this Amendment. Authority acknowledges that Developer formed Phase IIB Developer in order for affiliates of Developer to obtain the benefit of the Tax Credits and further finance the construction of Phase IIB. Therefore, Phase IIB Developer will be comprised of the Phase IIB Managing Member, which shall be the managing member of Phase IIB Developer at all times, except as hereinafter provided in Paragraph (2) below, and the Investor. Phase IIB Developer hereby represents and warrants to the Authority that Phase IIB Developer's Operating Agreement controls and will continue to control the amount and timing of all capital contributions to Phase IIB Developer. Notwithstanding anything to the contrary set forth in the Original DDA, Authority hereby approves of the following:

(i) the admission of the Investor as a non-managing member of Phase IIB Developer on the terms and conditions set forth in the Phase IIB Developer's Operating Agreement;

(ii) the sale of membership interests in the Investor to one or more low income housing tax credit investors, provided that in each instance the Phase IIB Developer's Operating Agreement shall not be amended without the consent of the Authority (except as necessary to effectuate permitted transfers), which approval shall not be unreasonably withheld, conditioned or delayed, and all documents associated with the low income tax credit syndication reasonably requested by the Authority (excluding Investor's internal operating and organizational documents) are submitted to the Authority for approval (and have been so approved prior to execution), which approval shall not be unreasonably, withheld, conditioned, or delayed;

(iii) transfers of the Investor's direct or indirect membership interest in the Phase IIB Developer provided that in each instance: (A) such transfer does not affect the timing and amount of the capital contributions provided for in and subject to the terms of the Phase IIB Developer's Operating Agreement as approved by the Authority; (B) an entity Controlled (as defined by the term "Control" in Section 110 of the Original DDA) by or under common Control with the original partners of the Investor retains a managing membership interest or general partner interest in the successor Investor; and (C) following such transfer the Investor remains liable for all unpaid capital contributions to the Phase IIB Developer; and

(iv) transfers of the Investor's interests in the Phase IIB Developer to the Phase IIB Managing Member or any Institutional Lender.

(2) Removal of Phase IIB Managing Member. It is of critical importance to Authority that the Phase IIB Managing Member be controlled directly by Related California Urban Housing, LLC and controlled indirectly by the same entities who control The Related Companies of California, LLC and be in control of the development of Phase IIB through the completion of Phase IIB. However, Authority recognizes that under certain circumstances it may be necessary for the Investor to remove the Phase IIB Managing Member as the sole managing member of the Phase IIB Developer and/or to terminate the Phase IIB Managing Member's membership interest in Phase IIB Developer prior to the full completion of Phase IIB. The only events that will permit such removal of the Phase IIB Managing Member as the sole managing member of Phase IIB Developer prior to full completion of Phase IIB, without the consent of Authority, are:

(i) Gross negligence, fraud, willful misconduct or a material misrepresentation by the Phase IIB Managing Member in respect of Phase IIB Developer's Operating Agreement or Phase IIB;

(ii) Any of the Related Key Personnel is indicted for a crime that constitutes a felony, unless such individual is immediately removed from any direct or indirect ownership interest in or control of the Phase IIB Managing Member and from any responsibilities in respect of Phase IIB and the Amended DDA, and such individual is replaced with a person acceptable to the Authority within thirty (30) days after such indictment;

(iii) A Bankruptcy/Dissolution Event occurs as to the Phase IIB Managing Member;

(iv) A default by the Phase IIB Managing Member under the Phase IIB Developer Operating Agreement which permits the Investor to remove the Phase IIB Managing Member as the managing member pursuant to the terms of the Phase IIB Developer Operating Agreement; or

(v) The occurrence of any breach or default by or of Phase IIB Developer under any Mortgage (or any other loan documents governing, evidencing or securing the loan that is secured pursuant to any such Mortgage, the Amended DDA or the Phase IIB Parcel Ground Lease), subject to applicable notice and cure periods, as the result of any act or omission of the Phase IIB Managing Member or its direct or indirect constituents or their employees (but only if Phase IIB Developer has provided the Phase IIB Managing Member with the resources and authority necessary to avoid such breach or default), which breach or default may, with the giving of notice or passage of time, provide the Mortgagee with the right to accelerate the loan secured by the Mortgage or commence foreclosure proceedings involving any of Phase IIB Developer's assets or terminate the Amended DDA with respect to Phase IIB or the Phase IIB Parcel Ground Lease.

If the Phase IIB Managing Member is removed as the managing member of Phase IIB Developer for any of the foregoing reasons, (i) the Investor shall promptly present to Authority a proposed substitute developer to replace the Phase IIB Managing Member as the managing member, and (ii) pending the approval of such substitute developer by Authority, the Investor will have the temporary authority to take steps on behalf of Phase IIB Developer to continue, protect and preserve Phase IIB. Such substitute developer must have at least ten (10) years of experience in the development and operation of projects similar in scope and scale to the Affordable Housing Units (together with related structural elements and exterior walls), a net worth of at least $200,000,000 (provided that such minimum net worth requirement shall not apply following the issuance of a Certificate of Completion for the entire Phase IIB Improvements), and no record of any litigation involving the Authority, the County, the City, or the CRA (a "**Qualified Phase IIB Developer**"). If the Investor presents a Qualified Phase IIB Developer to Authority, Authority will determine, within thirty (30) days after such submission, if such proposed developer is acceptable to Authority, such consent not to be unreasonably conditioned, withheld, or delayed. If Authority disapproves a proposed developer, the Investors will use commercially reasonable efforts to find and present to Authority other Qualified Phase IIB Developers until Authority approves a Qualified Phase IIB Developer. Authority shall have the right to disapprove, in its sole discretion, any transferee managing member that has less than five years of experience managing affordable housing projects and at the time of such transfer manages projects containing, in the aggregate, less than one hundred affordable housing units. Until Authority approves a Qualified Phase IIB Developer, the Investor may continue Phase IIB in accordance with the terms of the Amended DDA and the Phase IIB Parcel Ground Lease, and the removal of the Phase IIB Managing Member will not constitute a default under the Amended DDA, so long as Phase IIB Developer is not in default of any other terms or provisions of the Amended DDA.

If with respect to transfers of interests in Phase IIB Developer an express conflict arises between the transfer restrictions set forth in the Phase IIB Parcel Ground Lease and the transfer restrictions set forth in the Amended DDA, the transfer restrictions set forth in the Phase IIB Parcel Ground Lease shall apply and control, solely to the extent of such express conflict.

9.3 **Investor Protections**. All of the rights and obligations set forth in Article 14 of the Original DDA with respect to Mortgagees shall apply to, and inure to the benefit of, the Investor as if the Investor were a Mortgagee for purposes thereof. Without limiting the generality of the foregoing, copies of all notices provided to the Mortgagee shall also be provided to the Investor, and the Investor will have the same rights to cure a default by the Phase IIB Developer under the terms of the Amended DDA as are provided to the Mortgagee. The initial address for the Investor is BF Grand Avenue, LP, c/o Boston Financial Investment Management, LP, 101 Arch Street, 13th Floor, Boston, Massachusetts 02110, Attention: Asset Management – Parcel M Grand Avenue Apartments, with a copy to: Holland & Knight LLP, 10 St. James Avenue, Boston, Massachusetts 02116, Attention: James E. McDermott, Esq. Authority hereby agrees that any cure of any default under the Amended DDA made or tendered by the Investor shall be accepted or rejected by Authority on the same terms as if made by or tendered by the Phase IIB Developer. The Investor is hereby deemed a third party beneficiary of the foregoing provisions of this Section 9.3. For avoidance of doubt, the [Phase IIB Institutional Lender] is hereby deemed a third party beneficiary of the provisions set forth in Article 14 of the Amended DDA.

9.4 **Non-Disturbance Agreement**. Concurrently with Authority and Phase IIB Developer's entry into the Phase IIB Parcel Ground Lease, the CRA, Authority and Phase IIB Developer shall enter into a Sublessee's Non-Disturbance and Ground Lease Recognition Agreement in substantially the form attached hereto as Exhibit "F" (the "**CRA-Authority NDA**"). Execution and delivery of the CRA-Authority NDA by the CRA, Authority and Phase IIB Developer shall be a condition precedent to Phase IIB Developer's obligation to enter into the Phase IIB Ground Lease. Phase IIB Developer shall have the right to record the CRA-Authority NDA against the CRA's fee interest in the Phase IIB Parcel, the Authority's leasehold interest in the Phase IIB Parcel and the Phase IIB Developer's sub-leasehold interest in the Phase IIB Parcel, at Phase IIB Developer's expense. Concurrent with execution of the Market Rate Ground Lease, CRA, Authority and Market Rate Developer shall enter into a Sublessee's Non-Disturbance and Ground Lease Recognition Agreement substantially similar to the form thereof attached to the CRA-Authority NDA (the "**CRA-Authority Market Rate NDA**") and a first amendment to the CRA-Authority NDA amending the legal description on the CRA-Authority NDA to release the Phase IIB Affordable Parcels. Execution and delivery of the CRA-Authority Market Rate NDA shall be a condition precedent to Phase IIB Market Rate Owner's obligation to enter into the Phase IIB Market Rate Ground Lease.

9.5 **Defaults**. No Event of Default by Phase IIB Developer shall be deemed to be a default by Developer or Phase IIA Developer, and no Event of Default by Developer or Phase IIA Developer shall be deemed to be a default by Phase IIB Developer. Without limiting Authority's rights and remedies under Article 13 of the Original DDA, in the event of a Terminating Event (as defined in Section 1312 of the Original DDA) by Phase IIB Developer, Authority shall have the right, but not the obligation, to eliminate Phase IIB from the Project, subject to Developer's right to reinstatement as set forth in the Phase IIB Assignment Agreement.

9.6 **Confirmation of Obligations**. Authority hereby confirms that Phase IIB Developer shall not be responsible for Public Space Improvements, Grand Avenue Streetscape or

Offsite Publicly Owned Improvements, as such terms are defined in Article 3 and Section 110 of the Original DDA.

10. **Completion Guaranty**. Notwithstanding Section 417 of the Original DDA which requires that Related maintain a net worth of at least $500,000,000 in order to qualify as an acceptable guarantor for purposes of the Completion Guaranty, Authority approves Related as an acceptable guarantor with respect to the Completion Guaranty for Phase IIB, provided that (i) Related shall maintain a net worth of at least $200,000,000 throughout the period prior to the issuance of a Certificate of Completion for all of the Components of Phase IIB, and (ii) Related has been approved as the completion guarantor by Phase IIB Developer's construction lender.

11. **Phase IIB Developer Net Worth**. If Related provides the Completion Guaranty required by Section 417 of the Original DDA as amended by Article 9 above, Section 1501(8)(b) of the Original DDA shall be inapplicable to Phase IIB Developer.

12. **Art Fees**. As part of the Project Documents that Phase IIB Developer submits in connection with Phase IIB, Phase IIB Developer shall include plans, specification, and other design documents for on-site and off-site art improvements subject to an art plan approved by the Authority. Phase IIB Developer shall be solely responsible for all costs and expenses of such art improvements, and Phase IIB Developer's art budget shall equal one percent (1%) of the total development costs of the Phase IIB Improvements. Without limiting the generality of the foregoing, (a) thirty-five (35%) of the funds required to be spent by Phase IIB Developer for art shall be used for the construction of art improvements, subject to an art plan approved by the CRA, and (b) sixty-five percent (65%) of the funds required to be spent by Phase IIB Developer shall be paid to the Phase IIA Developer (as defined in the Amended DDA) at the direction of the CRA. The art improvements required to be constructed by Phase IIB Developer pursuant to this Section 12 shall consist of landscaping which will be located on certain real property and more specifically described in Schedule 7 hereto (the "**Grand Promenade Easement Area**"), and shall be referred to collectively as the "**Grand Promenade Easement Improvements**." Notwithstanding the foregoing, Phase IIB Developer's obligation to construct the Grand Promenade Easement Improvements shall be subject to Phase IIB Developer's receipt of the prior written consent of the owner of the Grand Promenade Easement Area to the construction and ongoing maintenance of the Grand Promenade Easement Improvements on the Grand Promenade Easement Area, and permission to enter the Grand Promenade Easement Area for such purposes. The Phase IIB Developer shall use reasonable efforts to obtain such permission and consent and the Authority shall cooperate in such efforts and have the right to obtain such permission and consent independently. In the event the Phase IIB Developer and/or the Authority is unable to obtain and provide the foregoing consent and permission within a reasonable period of time, Phase IIB Developer shall have no obligation to construct the Grand Promenade Easement Improvements and the portion of the art fees set aside for such construction shall be used for construction of on-site public art improvements in accordance with an art plan approved by the CRA. Phase IIB Developer, at its sole cost and expense, shall keep and maintain such improvements in good order, repair and condition, normal wear and tear excepted as long as the Phase IIB Parcel Ground Lease or the Phase IIB Market Rate Ground Lease remains in effect.

13. **Retail Incentive Rent; First Sale Profit Payment**.

13.1 **No Retail Incentive Rent**. Sections 204(B)(II) (Residential Incentive Rent) and 204(C)(II) (Retail Incentive Rent) of the Original DDA shall not apply to Phase IIB.

13.2 **First Sale Profit Payment.** As a "**First Sale Profit Payment**", Phase IIB Developer shall pay to Authority, upon the first to occur of (i) the Sale of the Phase IIB Market Rate Owner Improvements or (ii) the Sale of the entirety of the Phase IIB Improvements, fifty percent (50%) of the Net Sale Profits (without duplication of the "First Sale Profit Payment Rent" due under the Phase IIB Parcel Ground Lease). For the purpose of illustration and clarification, Exhibit "G" attached hereto sets forth sample calculations of potential First Sale Profit Payment. The following terms shall have the following meanings for the purposes of this Section 13.2:

13.2.1 The "**Leasehold Acquisition Fee**" shall be calculated by Authority and payable by Phase IIB Developer as set forth in the Amended DDA. The Authority shall credit Five Million Two Hundred Twenty Thousand Dollars ($5,220,000) in funds previously paid to Authority by an affiliate of Phase IIB Developer toward the payment of the Leasehold Acquisition Fee.

13.2.3 "**Deemed Leasehold Acquisition Fee Payment**" means the amount equal to Five Million Two Hundred Twenty Thousand Dollars ($5,220,000) which represents funds previously paid to the Authority by an affiliate of Phase IIB Developer toward the payment of the Leasehold Acquisition Fee.

13.2.4 "**Deferred Development Fee**" means any portion of the developer fee payable to Phase IIB Developer in connection with the development of the Phase IIB Market Rate Owner Improvements which was not paid from development sources. The Deferred Development Fee shall not exceed the sum of Two Million Sixty-Four Thousand Eight Hundred Eighty-Six Dollars ($2,064,886) minus any portion of such development fee paid upon and/or following closing of the Tax Exempt Note Loan, upon which deferred amount no interest shall accrue or be payable.

13.2.5 "**Development Deficit Advance**" means any loan or capital contribution made to the Phase IIB Developer to fund development cost overruns associated with the Phase IIB Market Rate Owner Improvements, and any accrued interest thereon.

13.2.6 "**Distributable Cash**" means, for any period, Operating Receipts less Operating Expenses.

13.2.7 "**Gross Sale Proceeds**" means the gross sale proceeds received by the Phase IIB Developer from the Sale of the Phase IIB Market Rate Owner Improvements.

13.2.8 "**IRR**" means the annual discount rate, compounded monthly, at which the net present value as of the closing date of the Tax Exempt Note Loan of all Distributable Cash (discounted at such rate from the dates such Distributable Cash was actually received and was available for distribution), is equal to the net present value as of the closing date of the Tax Exempt Note Loan of the Phase IIB Developer Equity Investment. For the purposes of calculating IRR, Distributable Cash shall be deemed to be available for distribution on a quarterly basis in arrears based upon the Distributable Cash of the prior calendar quarter.

13.2.9 "**Net Sale Profit"** means an amount equal to the Gross Sale Proceeds less the following: (i) payment of actual third party costs and expenses incurred in connection with the Sale, including, without limitation, title and escrow fees, documentary transfer taxes, legal and accounting fees, marketing expenses and brokerage commissions (which commissions shall not exceed two percent (2%) of the Gross Sale Proceeds); (ii) payment of any outstanding amount of the Tax Exempt Note Loan, including, without limitation, repayment of outstanding principal and interest on any such debt and the payment of any fees and/or expenses imposed in connection with the repayment of such Tax Exempt Note Loan, including, without limitation, any prepayment penalties; (iii) payment of any outstanding Development Deficit Advances, Operating Deficit Advances and/or Deferred Development Fee; (iv) payment to the Phase IIB Developer of an amount equal to the Deemed Leasehold Acquisition Fee Payment; (v) payment to the Phase IIB Developer of an amount equal to the Tax Exempt Note Loan Letter of Credit Draw Amount; and (vi) payment to the Phase IIB Developer of an amount which would cause Phase IIB Developer to receive a twenty percent (20%) IRR on the Phase IIB Developer Equity Investment when taking into account all prior Distributable Cash received by Phase IIB Developer.

13.2.10 "**Operating Deficit Advance**" means any loan or capital contribution made to the Phase IIB Developer to fund operating deficits associated with the Phase IIB Market Rate Owner Improvements, and any accrued interest thereon.

13.2.11 "**Operating Expenses**" for a particular period means all sums actually paid by or on behalf of the Phase IIB Developer during that period in connection with the owning, financing, leasing, management, maintenance, or repair or operation of the Phase IIB Market Rate Owner Improvements, including, but not limited to (but only to the extent actually paid by or on behalf of the Phase IIB Developer or deposited to a reserve in that period): (a) any debt service, whether principal, interest or otherwise, and letter of credit and other financing fees and charges (including remarketing fees, fiscal agent fees, costs of purchasing interest rate protection (if applicable) and the like) paid pursuant to any borrowing of Phase IIB Developer (including, without limitation, any payment made pursuant to the Tax Exempt Note Loan and/or any repayment of Development Deficit Advances, Operating Deficit Advances and/or Deferred Developer Fee); (b) management fees, leasing commissions and tenant allowances; (c) property taxes and assessments and sewer and water charges (or escrows or deposits for same paid to any lender of Phase IIB Developer and/or any agent thereof or reserves for same held by the Phase IIB Developer); (d) insurance premiums or escrows or deposits for same paid to any lender of Phase IIB Developer and/or any agent thereof or reserve for same held by the Phase IIB Developer; (e) additions and deposits to capital reserve, interest reserve and working capital reserve accounts; (f) any expenditure for a capital item not covered by a capital reserve; (g) legal, accounting and audit fees directly related to ownership, leasing, management, maintenance, repair or operation of the Phase IIB Market Rate Owner Improvements directly or indirectly related to preparing reports as may be required by any lender of Phase IIB Developer and/or the Authority. Operating Expenses will not include (i) any depreciation, amortization, bad debt allowance, or other non-cash item of expense; (ii) except as provided in clause (f) above, any expenditure for any capital item; (iii) any expenditure for repair that is paid out of casualty insurance proceeds or a condemnation award; and (iv) disbursements from the capital reserve account established and funded pursuant to (e) of this section.

13.2.12 "**Operating Receipts**" for a particular period means all rents, fees, and other sums actually paid to the Phase IIB Developer during such period for occupancy, use or operation of the Phase IIB Market Rate Owner Improvements, including, but not limited to, amounts paid to the Phase IIB Developer from parking, vending, utility or other concessions in the Phase IIB Market Rate Owner Improvements. Gross Receipts will also include, but not be limited to (but only to the extent actually received by or for the benefit of the Phase IIB Developer in a particular period for such occupancy, use or operation) any condemnation awards or rental insurance proceeds paid in lieu of rent (but not other casualty proceeds or condemnation awards). Operating Receipts shall not include the proceeds of any loan made to Phase IIB Developer (including, without limitation, any proceeds realized from the Tax Exempt Note Loan, any Development Deficit Advance and/or any Operating Deficit Advance), the proceeds of any equity contribution made to the Phase IIB Developer by any member thereof (including, without limitation, the proceeds of any tax credit equity contributions), or security deposits received from any sub-tenant of the Phase IIB Market Rate Owner Improvements until applied by the Phase IIB Developer.

13.2.13 "**Phase IIB Developer Equity Investment**" means an amount equal to the sum of the Deemed Leasehold Acquisition Fee Payment plus the initial face amount of the Letter of Credit.

13.2.14 "**Sale**" means a sale of the Phase IIB Market Rate Owner Improvements, the Phase IIB Improvements and/or the sale or other transfer (whether in one transaction or in a series of transactions) of more than fifty percent (50%) of the membership interests in Phase IIB Developer, in each case to a person or entity who is not an Affiliate of Phase IIB Developer; provided, however, that the Market Rate Transfer shall not be deemed to be a Sale hereunder.

13.2.15 "**Tax Exempt Note Loan Letter of Credit Draw Amount**" means the amount, if any, of the Letter of Credit which is drawn upon in connection with the Tax Exempt Note Loan.

13.3 Payment and Late Fees. Payment of the First Sale Profit Payment shall be made by check or draft issued and payable to The Los Angeles Grand Avenue Authority, accompanied by a detailed statement showing the basis for its calculation of the amount payable to Authority and mailed or otherwise delivered to the Authority. Authority shall have no obligation to issue statements, invoices or other demands for payment, and the First Sale Profit Payment shall be payable notwithstanding the fact that Phase IIB Developer has received no such statement, invoice or demand. If the First Sale Profit Payment is not received by Authority on the date due, Phase IIB Developer acknowledges that Authority will experience additional management, administrative and other costs that are impracticable or extremely difficult to determine. Therefore, any First Sale Profit Payment owing hereunder that is not paid on the date due shall bear interest from the date when due until paid at a rate per annum equal to the lesser of (i) the Reference Rate plus three percent (3%) per annum or (ii) the highest rate permitted by applicable Laws. Additionally, a fee ("**Late Fee**") of six percent (6%) of the unpaid amount shall be added to any amount unpaid within five (5) days after the date such amount was due. Phase IIB Developer acknowledges that such Late Fee and interest shall be applicable to all identified monetary deficiencies under this Lease, whether identified by audit or otherwise, and that

interest on such amounts shall accrue from and after the date when such amounts were due and payable as provided herein (as opposed to the date when such deficiencies are identified by Authority). If any payment by Phase IIB Developer to Authority hereunder becomes subject to disgorgement or is subject to any lien in favor of a third party as a result of Phase IIB Developer's actions or agreements, then Phase IIB Developer shall immediately replace any such payment to the extent it is so disgorged and shall immediately remove any lien on such payment so that Authority has the full and unfettered use of such funds.

13.4 Phase IIB Developer's Books and Records. Phase IIB Developer shall maintain in a safe and orderly manner all of its records necessary to compute and calculate the First Sale Profit Payment payable pursuant to this Section 13 for a period of four (4) years following the completion of the sale that triggers such First Sale Profit Payment. Phase IIB Developer shall maintain such records on a current basis and in sufficient detail to permit adequate review thereof and, at all reasonable times, copies of such records shall be available to the Authority or its representatives for such purposes. The Authority may, by written notice to Phase IIB Developer within three (3) years after First Sale Profit Payment was paid (or due to be paid) to the Authority, cause an audit to be commenced by a nationally recognized firm of certified public accountants, at the Authority's sole expense (subject to the last sentence of this Section 13.5), to verify if Phase IIB Developer's calculations of First Sale Profit Payment were accurate. If such audit reveals an underpayment of First Sale Profit Payment, then Phase IIB Developer shall promptly pay the amount so underpaid to the Authority, together with interest thereon at the Reference Rate plus three percent (3%) calculated from the date such First Sale Profit Payment was first due until the date actually paid. If it is determined that Phase IIB Developer underpaid First Sale Profit Payment by more than three percent (3%), the Authority shall be entitled to receive from Phase IIB Developer its actual and reasonable audit expenses incurred in respect to the audit of First Sale Profit Payment.

13.5 Effect of Market Rate Transfer. Notwithstanding anything to the contrary herein, no portion of the First Sale Profit Payment shall accrue or be payable with respect to the Affordable Housing Units and the foregoing provisions Section 13.2 through Section 13.4 shall be null and void as to the Phase IIB Developer following the Market Rate Transfer (it being understood that such provisions are to be instead incorporated into the Phase IIB Market Rate Ground Lease and any reference in this Section 13 to the Phase IIB Developer shall instead be deemed a reference to the Phase IIB Market Rate Owner).

14. **Schedule of Performance for Construction of Public Plaza**. The Phase IIA Developer shall cause the construction of the Public Plaza to be performed in accordance with the Schedule of Performance attached hereto to Exhibit "D."

15. **Ground Lessee Insurance Requirements.** If an express conflict arises between (i) the insurance requirements set forth in Article 6 of the DDA, on the one hand, and (ii) the insurance requirements set forth in Article 9 of the Phase IIB Parcel Ground Lease or Article 9 of the Phase IIB Market Rate Ground Lease, on the other hand, the applicable terms of the insurance requirements set forth in Article 9 of the Phase IIB Parcel Ground Lease or Article 9 of the Phase IIB Market Rate Ground Lease, as the case may be, shall control and prevail solely to the extent of such conflict.

16. **General Provisions.**

16.1 **Conforming Change**. The legal description of the Museum Parcel attached to the First Amendment to DDA as Exhibit "A-1" and the legal description of the Garage Airspace Parcel attached to the DDA Second Amendment as Schedule 1 are hereby replaced with the legal descriptions attached to this Amendment as Schedule 8 and Schedule 9, respectively. The foregoing is to reflect a minor adjustment in the upper elevation of the Garage Airspace Parcel.

16.2 **No Exercise of Phase IIA Developer's PFMD Termination Right**. Phase IIA Developer did not elect to exercise Phase IIA Developer's PFMD Termination Right (as defined in Recital D in the DDA Second Amendment). Therefore, Article 2 of the DDA Second Amendment is hereby deleted and of no further force and effect.

16.3 **Binding Agreement; Future Amendments.** This Amendment shall be binding upon and inure to the benefit of the parties hereto, their legal representatives, successors and permitted assigns.

16.4 **Ratification; Conflicts.** Except as specifically amended or modified herein, each and every term, covenant, and condition of the Original DDA, as amended by the DDA First Amendment and the DDA Second Amendment, is hereby ratified and shall remain in full force and effect. In the event of a conflict between the Original DDA as amended by the DDA First Amendment, the DDA Second Amendment and this Amendment, this Amendment shall prevail.

16.5 **Counterparts.** This Amendment may be executed in one or more counterparts, and each set of duly delivered identical counterparts which includes all signatories shall be deemed to be one original document.

[Remainder of Page intentionally left blank; signatures on following pages]

IN WITNESS WHEREOF, Authority, Developer, Phase IIA Developer, and Phase IIB Developer have caused this Amendment to be executed as of the day and year first above written.

"AUTHORITY"

THE LOS ANGELES GRAND AVENUE AUTHORITY,
a California joint powers authority

By: _____
Name: _____
Title: _____

APPROVED AS TO FORM:

Carmen A. Trutanich
City Attorney

By: _____
Timothy J. Chung
Deputy City Attorney

APPROVED AS TO FORM:

John F. Krattli
County Counsel

By: _____
Helen S. Parker
Principal Deputy County Counsel

"DEVELOPER"

GRAND AVENUE L.A., LLC,
a Delaware limited liability company

By: RELATED GRAND AVENUE, LLC,
a Delaware limited liability company,
its Manager

By: THE RELATED COMPANIES, L.P.,
a New York limited partnership,
its Managing Member

By: The Related Realty Group, Inc.,
a Delaware corporation,
its sole General Partner

By: _____
Name: _____
Title: _____

"PHASE IIA DEVELOPER"

THE BROAD COLLECTION,
a California public benefit corporation

By: _____
Name: Eli Broad
Title: President

"PHASE IIB DEVELOPER"

GRAND AVENUE M HOUSING PARTNERS, LLC,
a California limited liability company

By: Related/Parcel M Development Co., LLC,
a California limited liability company,
its managing member

By: _____
Name: William A. Witte
Title: President

[signatures continued from preceding page]

The undersigned hereby consents to and approves of the foregoing Third Amendment to Disposition and Development Agreement and agrees to be bound by the terms of Section 7(d) and 9.4 thereof.

Dated: _____

"CRA"

CRA/LA, A DESIGNATED LOCAL AUTHORITY**,** a public body formed under Health & Safety Code Section 34173(d)(3), as successor to the Community Redevelopment Agency of the City of Los Angeles

By: _____
Christine Essel
Chief Executive Officer

APPROVED AS TO FORM:

GOLDFARB & LIPMAN LLP

By: _____
Thomas Webber
CRA/LA Special Counsel

[signatures continued on following page]

[signatures continued from preceding page]

The undersigned hereby consents to and approves of the foregoing Third Amendment to Disposition and Development Agreement.

Dated: _____

"COUNTY"

THE COUNTY OF LOS ANGELES,
a subdivision of the State Of California

By:_____
Name:_____
Title:_____

APPROVED AS TO FORM:

John F. Krattli
County Counsel

By: _____
Helen S. Parker
Principal Deputy County Counsel

Exhibit A – Phase IIB Parcel Ground Lease
Exhibit B – Phase IIB Parcel Market Rate Ground Lease
Exhibit C – Scope of Development
Exhibit D – Schedule of Performance
Exhibit E – Phase IIB Developer's Environmental Compliance Obligations
Exhibit F – CRA-Authority NDA
Exhibit G – Sample First Sale Profit Calculations

Schedule 1 – Phase IIB Affordable Parcels
Schedule 2 – Phase IIB Market Rate Parcels
Schedule 3 – Project Documents
Schedule 4 – 7.7 Million Dollar Grant Agreement
Schedule 5 – 7.7 Million Dollar Loan Documents
Schedule 6A – Affordable Housing Loan Agreement
Schedule 6B – Affordable Housing Loan Promissory Note
Schedule 6C – Affordable Housing Loan Deed of Trust
Schedule 6D – Affordable Housing Loan Regulatory Agreement

Schedule 7 – Grand Promenade Easement Area
Schedule 8 – Museum Parcel Legal Description
Schedule 9 – Garage Airspace Parcel Legal Description

EXHIBIT A

PHASE IIB PARCEL GROUND LEASE

GROUND LEASE
GRAND AVENUE PROJECT

PHASE IIB – PARCEL M

THIS GROUND LEASE ("**Lease**") is dated as of the [_____ day of _____, 2012**]**, by and between THE LOS ANGELES GRAND AVENUE AUTHORITY, a California joint powers authority ("**Authority**"), as lessor, and GRAND AVENUE M HOUSING PARTNERS, LLC, a California limited liability company ("**Lessee**"), as lessee.

W I T N E S S E T H

WHEREAS, Authority and Lessee are parties to that certain Disposition and Development Agreement (Grand Avenue) dated as of March 5, 2007 (the "**Original DDA**"), as amended by that certain First Amendment to Disposition and Development Agreement (Grand Avenue) dated as of August 23, 2010 (the "**DDA First Amendment**), that certain Second Amendment to Disposition and Development Agreement (Grand Avenue) dated as of May 31, 2011 (the "**DDA Second Amendment**"), and that certain Third Amendment to Disposition and Development Agreement (Grand Avenue) of even date herewith (the "**DDA Third Amendment**"; the Original DDA, as amended by the DDA First Amendment, DDA Second Amendment, and DDA Third Amendment, shall be referred to herein as the "**DDA**") pertaining to the development of certain real property adjacent to the Los Angeles downtown Civic Center and Music Center with retail, hotel, office, and housing (including affordable housing), together with destination urban park uses and remaking of Grand Avenue into active and inviting pedestrian uses (collectively, the "**Grand Avenue Project**");

WHEREAS, CRA/LA, a designated local authority, a public body formed under Health & Safety Code Section 34173(d)(3), as successor to the Community Redevelopment Agency of the City of Los Angeles (the "**CRA**") is the fee owner of certain real property commonly known as "Parcel M-2" of the Redevelopment Plan (as more particularly described on Exhibit "A" attached hereto, the "**Premises**") upon which, pursuant to the DDA, Lessee is to construct a portion of the Grand Avenue Project referred to herein as "**Phase IIB**" or the "**Project**;"

WHEREAS, pursuant to that certain Ground Lease of even date herewith between the CRA and the Authority (the "**CRA-Authority Lease**"), the CRA has ground leased the Premises to the Authority;

WHEREAS, pursuant to the DDA, Phase IIB will include the construction and development of certain improvements on the Premises, consisting of (i) a residential tower of

approximately 20 stories, to be constructed on Parcel M-2, containing approximately 271 rental units, of which 56 (including one manager's unit) shall be Affordable Housing Units (as defined in Section 1.2 below) reserved, per Section 707 of the Original DDA, for occupancy by Sixty Percent Households (as defined in Section 1.2 below), and, in Lessee's sole discretion Very Low Income Households (as defined in Section 1.2 below) and/or Forty Percent Households (as defined in Section 1.2 below), (ii) a Parking Garage (as defined in Section 1.2 below) containing approximately 280 parking spaces, and (iii) Retail Improvements (as defined in Section 1.2 below) consisting of an approximately 5,500 square foot indoor restaurant space plus approximately 1,750 square feet of outdoor restaurant patio area (totaling approximately 7,250 square feet of restaurant space) (collectively, the "**Phase IIB Improvements**");

WHEREAS, in order to effect development of such Phase IIB Improvements, the Authority desires to sublease to Lessee, and Lessee desires to sublease from the Authority, the Premises, subject to the terms and conditions set forth herein;

WHEREAS, Lessee has further determined that in order to finance construction of Phase IIB, it is necessary for Lessee, no later than the issuance of a Certificate of Completion for the Phase IIB Improvements, to process a subdivision of the Premises into multiple air-rights parcels (the "**Subdivision**") through Recordation of a tract map (the "**Map**"), pursuant to which the parcels listed on Schedule 1A attached hereto will constitute the "**Affordable Housing Parcels**" and the parcels listed on Schedule 1B attached hereto will constitute the "**Market Rate Parcels**." In connection therewith, Lessee has formed a single-purpose limited liability company with Related California Urban Housing, LLC, a California limited liability company acting as managing member, Grand Avenue M Urban Housing, LLC, a California limited liability company (the "**Market Rate Parcel Owner**"), intended to own a sub-leasehold interest in the Market Rate Parcels upon satisfaction of the conditions set forth herein and in the DDA. Concurrent with recordation of the Map, the Lessee, the Market Rate Parcel Owner, CRA and the Authority will enter into (and Lessee shall cause the Recordation of) a reciprocal easement agreement with covenants and conditions establishing, among other things, easements relating to access between the Affordable Housing Parcels and the Market Rate Parcels, and certain rights and obligations with respect to ownership and maintenance of the Phase IIB Improvements (the "**Phase IIB REA**"); and

WHEREAS, following Recordation of the Map, Recordation of the Phase IIB REA, and satisfaction of any other conditions precedent set forth herein or in the DDA, Lessee will convey Lessee's fee interest in the Market Rate Rental Improvements (as hereinafter defined) to the Market Rate Parcel Owner, and the Authority will enter into a sub-ground lease of the Market Rate Parcels with the Market Rate Parcel Owner in substantially the form attached to the DDA (the "**Market Rate Parcel Ground Lease**"), which Market Rate Parcel Ground Lease will provide for the payment of First Sale Profit Payment Rent (as defined below), and concurrently therewith, the Market Rate Parcels and any obligations associated therewith shall be released from this Lease by operation of the provisions hereof. Concurrently with the conversion of the Senior Loan from construction to permanent phase, the mortgages and related documents encumbering the Premises and securing the 7.7 Million Dollar Loan (as defined below) and the Affordable Housing Loan (as defined below) will be amended to release the Market Rate Parcels as security for the 7.7 Million Dollar Loan and the Affordable Housing Loan.

NOW, THEREFORE, in reliance on the foregoing and in consideration of the mutual covenants, agreements and conditions set forth herein, and for other good and valuable consideration, the receipt and sufficiency of which is hereby acknowledged, the parties hereto and each of them do agree on the following:

1. **GENERAL TERMS**.

1.1 **Lease**. For and in consideration of the payment of consideration and the performance of all the covenants and conditions of this Lease, Authority hereby subleases to Lessee, and Lessee hereby subleases and hires from Authority, an exclusive right to possess and use, as subtenant, the Premises for the Term (as defined in Section 2.1 below), upon the terms and conditions and subject to the requirements set forth herein.

1.1.1 As-Is. Lessee accepts the Premises in their present condition notwithstanding the fact that there may be certain defects in the Premises, whether or not known to either party to this Lease, at the time of the Commencement Date (as defined in Section 2.1 below), and Lessee hereby represents that it has performed all investigations necessary, including without limitation soils and engineering inspections, in connection with its acceptance of the Premises "AS IS, WHERE IS, AND WITH ALL FAULTS". Lessee hereby accepts the Premises on an "AS IS, WHERE IS, AND WITH ALL FAULTS" basis and, except as expressly set forth in this Lease, Lessee is not relying on any representation or warranty of any kind whatsoever, express or implied, from Authority or any of the other Governing Entities or their respective agents or employees, as to any matters concerning the Premises and/or any Existing Improvements (as defined in Section 2.2 below) located thereon, including without limitation: (i) the quality, nature, adequacy and physical condition and aspects of the Premises and/or any Existing Improvements located thereon, including, but not limited to, the structural elements, foundation, erosion, appurtenances, access, landscaping, parking facilities and the electrical, mechanical, plumbing, sewage and utility systems, facilities and appliances, including the presence or absence of any latent or patent condition thereon or therein, and the square footage of the land and the Existing Improvements, (ii) the quality, nature, adequacy and physical condition of soils, geology and any groundwater, including any Hazardous Materials (as defined in Section 1.2 below) thereon or therein; (iii) the existence, quality, nature, adequacy and physical condition of utilities serving the Premises and/or any Existing Improvements located thereon, (iv) the development potential of the Premises, and the use, habitability, merchantability or fitness, or the suitability, value or adequacy of the Premises and/or any Existing Improvements located thereon for any particular purpose, (v) the zoning or other legal status or entitlement or lack thereof of the Premises or any other public or private restrictions on use of the Premises, (vi) the compliance of the Premises and/or any Existing Improvements located thereon with any applicable Laws (including, without limitation, relevant provisions of the Americans with Disabilities Act), (vii) the presence of any underground storage tank or Hazardous Materials on, under or about the Premises or the adjoining or neighboring property, (viii) the quality of any labor and materials used in any Existing Improvements, (ix) the condition of title to the Premises, and (x) the economics of the operation of the Premises and/or any Existing Improvements located thereon. Lessee waives any right of reimbursement or indemnification from Authority for Lessee's costs related to any physical conditions on the Premises. This waiver shall survive termination of this Lease.

1.1.2 Title. Authority represents that Authority holds a leasehold interest in and to the Premises pursuant to the CRA-Authority Lease and that Authority has the right to sublease the Premises to Lessee pursuant to this Lease. Lessee hereby acknowledges the interest of Authority in and to the Premises, and covenants and agrees never to contest or challenge the extent of said interest, except as is necessary to ensure that Lessee may occupy the Premises and/or encumber the leasehold estate pursuant to the terms and conditions of this Lease. The Authority, CRA and Lessee have entered into a Sublessee's Non-disturbance and Ground Lease Recognition Agreement dated of even date herewith (the "**CRA-Authority Lease NDA**"). Authority hereby approves recordation of the CRA-Authority Lease NDA against Authority's leasehold interest in the Premises. The CRA-Authority Lease NDA attaches a form of Sublessee's Non-disturbance and Ground Lease Recognition Agreement that will be executed by the Authority, CRA and the Market Rate Parcel Owner concurrent with the effectiveness of the Market Rate Parcel Ground Lease (the "**CRA-Authority Market Rate Lease NDA**") and a form of first amendment to the CRA-Authority Lease NDA that will be executed by the Authority, CRA and Lessee concurrent with the effectiveness of the Market Rate Parcel Ground Lease (the "**First Amendment to CRA-Authority Lease NDA**"). Authority hereby approves recordation of the CRA-Authority Market Rate Lease NDA against Authority's leasehold interest in the Premises.

1.1.3 Covenant Not to Encumber Title. Lessee covenants and agrees that it has no right or power to subject the interest of the Authority or the CRA in the Premises to any liens arising from or related to Lessee's interest in, or occupancy, use, or sublease of, the Premises, including without limitation any lien or mortgage of any Mortgagee or other creditor of Lessee, including any lender providing financing for all or any portion of the Premises. Notwithstanding the foregoing, the CRA and the Authority have approved the recordation of the Map, the Phase IIB REA, the CRA-Authority Lease NDA, the First Amendment to CRA-Authority Lease NDA and the CRA-Authority Market Rate Lease NDA against the CRA's fee title interest in Premises and the Authority's leasehold interest in the Premises.

1.2 **Defined Terms.** As used in this Lease, the following terms shall have the meanings set forth below:

"**7.7 Million Dollar Loan**" shall have the meaning set forth in the DDA.

"**Actual Cost**" means the reasonable cost and expenses incurred by Authority with respect to a particular activity or procedure, including without limitation (i) expenditures to third party legal counsel, financial and other consultants and advisors, and (ii) costs incurred in connection with appraisals.

"**Affiliate**" means any corporation, partnership, limited liability company or other organization or entity which is majority-owned and controlled by, controlling or under common control with (directly or indirectly) Lessee.

"**Affordable Housing Loan**" shall have the meaning set forth in the DDA.

"**Affordable Housing Parcels**" shall have the meaning set forth in the Recitals.

"**Affordable Housing Rental Improvements**" means that portion of the Residential Improvements that consists of all of the Affordable Housing Units (totaling 56 units including one manager's unit) in the Phase IIB Improvements and no other portion of the Phase IIB Improvements.

"**Affordable Housing Units**" means rental housing units the rent for which falls within the allowable maximum rents as calculated and published by the California Tax Credit Allocation Committee for projects located in Los Angeles, California, for either a Forty Percent Household, a Very Low Income Household or a Lower Income Household, as applicable, based on household size and household income.

"**Alterations**" shall have the meaning set forth in Section 5.2.

"**Applicable Rate**" means an annually compounded rate of interest equal to the lesser of (a) ten percent (10%) per annum or (b) the Reference Rate, as hereinafter defined, plus three percent (3%) per annum; however, the Applicable Rate shall in no event exceed the maximum rate of interest which may be charged pursuant to applicable Laws. If the Applicable Rate as determined by the first sentence of this definition exceeds such maximum rate of interest, then the Applicable Rate shall be deemed the maximum rate permissible under applicable Laws notwithstanding the first sentence of this definition.

"**Authority**" shall have the meaning set forth in the first paragraph of this Lease.

"**Authority Indemnified Parties**" shall have the meaning set forth in Article 8.

"**Award**" shall have the meaning set forth in Section 6.1.3.

"**Bankruptcy/Dissolution Event**" with respect to a person or entity, means the commencement or occurrence of any of the following with respect to such person or entity: (1) a case under Title 11 of the U.S. Code, as now constituted or hereafter amended, or under any other applicable federal or state bankruptcy law or other similar law; (2) the appointment of (or a proceeding to appoint) a trustee or receiver of any property interest; (3) an attachment, execution or other judicial seizure of (or a proceeding to attach, execute or seize) a substantial property interest; (4) an assignment for the benefit of creditors; (5) the taking of, failure to take, or submission to any action indicating (after reasonable investigation) an inability to meet its financial obligations as they accrue; or (6) a dissolution or liquidation; provided, however, that the events described in clauses (1), (2) or (3) shall not be included if the same are (a) involuntary and not at any time consented to, (b) contested within 30 days of commencement and thereafter diligently and continuously contested, and (c) dismissed or set aside, as the case may be, within 120 days of commencement.

"**City**" means the City of Los Angeles, a charter city and municipal corporation duly organized and existing under the Constitution and laws of the State of California.

"**Commencement Date**" shall have the meaning set forth in Section 2.1.

"**Commencement of Construction**" or "**Commence Construction**" means that the following have occurred as to Phase IIB: (i) the City has issued Lessee an excavation permit,

a shoring permit, a grading permit and a demolition permit (if applicable), (ii) Lessee has signed contracts with a general contractor for the demolition (if applicable), grading, excavation and shoring work, and (iii) Lessee has given the general contractor a notice to proceed and has caused the general contractor to physically commence demolition (if applicable) of any existing improvements and grading of the Premises pursuant to the contracts therefor.

"**Completion Guaranty**" shall have the meaning set forth in Section 2.1.10.

"**Condemnation**" shall have the meaning set forth in Section 6.1.1.

"**Condemnor**" shall have the meaning set forth in Subsection 6.1.4.

"**Control**" means the possession, directly or indirectly, of the power to direct or cause the direction of the management or policies of an entity or person, whether through the ability to exercise voting power, by contract or otherwise.

"**County**" means the County of Los Angeles.

"**CPI**" means the Consumer Price Index--All Urban Consumers for Los Angeles-Riverside-Orange County, as published from time to time by the United States Department of Labor or, in the event such index is no longer published or otherwise available, such replacement index as may be agreed upon by Authority and Lessee.

"**CRA**" means CRA/LA, a designated local authority, a public body formed under Health & Safety Code Section 34173(d)(3), as successor to the Community Redevelopment Agency of the City of Los Angeles, and its successors and assigns as fee title owner of the Premises.

"**CRA-Authority Lease**" shall have the meaning set forth in the third Recital of this Lease.

"**CRA-Authority Lease NDA**" shall have the meaning set forth in Section 1.1.2.

"**CRA-Authority Market Rate Lease NDA**" shall have the meaning set forth in Section 1.1.2.

"**Cure Period**" shall have the meaning set forth in Section 13.3.

"**Date of Taking**" shall have the meaning set forth in Section 6.1.2.

"**DDA**" shall have the meaning set forth in the first Recital of this Lease.

"**Director**" shall mean the officer designated by the Authority to administer this Lease.

"**Disqualification Judgment**" shall have the meaning set forth in Section 16.14.1.

"**Events of Default**" shall have the meaning set forth in Section 13.1.

"**Excluded Defaults**" shall have the meaning set forth in Section 12.3.3.

"**Existing Improvements**" shall have the meaning set forth in Section 2.2.

"**Extended Time**" shall have the meaning set forth in Section 15.15.

"**Final Plans and Specifications**" shall have the meaning set forth in Section 5.3.3.

"**First Amendment to CRA-Authority Lease NDA**" shall have the meaning set forth in Section 1.1.2.

"**Force Majeure**" shall have the meaning set forth in Section 5.10.

"**Foreclosure Transfer**" shall have the meaning set forth in Section 12.2.1.

"**Foreclosure Transferee**" shall have the meanings set forth in Section 12.2.1.

"**Forty Percent Household**" means a household with an adjusted income that does not exceed forty percent (40%) of the Median Income, adjusted for actual household size.

"**Forty Percent Household Unit**" means an Affordable Housing Unit reserved for occupancy by a Forty Percent Household.

"**Governing Entities**" means the Authority, the CRA, the County and the City.

"**Grand Avenue Project**" shall have the meaning set forth in the first Recital of this Lease.

"**Grand Promenade Easement Area**" shall have the meaning set forth in Section 2.1.13.

"**Grand Promenade Easement Improvements**" shall have the meaning set forth in Section 2.1.13.

"**Gross Error**" shall have the meaning set forth in Section 16.14.3.

"**Hazardous Materials**" shall include without limitation:

(i) Those substances included within the definitions of "hazardous substances", "Hazardous Materials", "toxic substances", or "solid waste" in the Comprehensive Environmental Response Compensation and Liability Act of 1980 (42 U.S.C. §§ 9601 et seq.) ("**CERCLA**"), as amended by Superfund Amendments and Reauthorization Act of 1986 (Pub. L. 99-499 100 Stat. 1613) ("**SARA**"), the Resource Conservation and Recovery Act of 1976 (42 U.S.C. §§6901 et seq.) ("**RCRA**"), and the Hazardous Materials Transportation Act, 49 U.S.C. §§ 1801 et seq., and in the regulations promulgated pursuant to said laws, all as amended;

(ii) Those substances listed in the United States Department of Transportation Table (49 CFR 172.101 and amendments thereto) or by the Environmental Protection Authority (or any successor authority) as hazardous substances (40 CFR Part 302 and amendments thereto);

(iii) Any material, waste or substance which is (A) petroleum, (B) asbestos, (C) polychlorinated biphenyls, (D) designated as a "hazardous substance" pursuant to Section 311 of the Clean Water Act, 33 U.S.C. §§ 1251 et seq. (33 U.S.C. §§1321) or listed pursuant to Section 307 of the Clean Water Act (33 U.S.C. §§ 1317), (E) flammable explosives, or (F) radioactive materials;

(iv) Any toxic or hazardous waste, material or substance or any oil or pesticide listed in, covered by, or regulated pursuant to, any state or local law, ordinance, rule or regulation applicable to the Premises, as heretofore or hereafter amended; and

(v) Such other substances, materials and wastes which are or become regulated as hazardous or toxic under applicable local, state or federal law, or the United States government, or which are classified as hazardous or toxic under federal, state, or local laws or regulations.

"**Hazardous Materials Laws**" means environmental and health and safety laws, regulations, ordinances, administrative decisions, common law decisions (whether federal, state, or local) with respect to Hazardous Materials, including those relating to soil and groundwater conditions.

"**Improvements**" means all above or below ground buildings, structures, fixtures, fences, walls, fountains, paving, parking areas, driveways, walkways, plazas, landscaping, permanently affixed utility systems and other improvements now or hereafter located on the Premises.

"**Income Approach**" shall have the meaning set forth in Section 6.7.1.

"**Initiating Party**" shall have the meaning set forth in Article 16.

"**Institutional Lender**" means any Mortgagee that is a commercial bank, savings bank, savings and loan institution, insurance company, pension fund, investment bank, opportunity fund, mortgage conduit, real estate investment trust, commercial finance lender or other similar financial institution that ordinarily engages in the business of making, holding or servicing commercial real estate loans, including any affiliate thereof, with at least $1 Billion of assets and at least $500 Million of tangible net worth for a Mortgagee of the Retail Improvements, Residential Improvements, and/or Parking Garage. Notwithstanding anything to the contrary in this definition, STRS shall be deemed to be an Institutional Lender for the purposes of this Lease.

"**Investor**" means the non-managing member(s) of Lessee.

"**Late Fee**" shall have the meaning set forth in Section 4.4.

"**Laws**" means all procedural and substantive federal, state and local laws, moratoria, initiatives, referenda, ordinances, rules, regulations, standards, orders and other governmental requirements (including those relating to the environment, health and safety or handicapped persons, and those imposed by Authority), applicable to all or any portion of the Premises, or the ownership, use, operation, maintenance, sale, lease or other disposition thereof, or to the development and construction of the Premises and the Improvements, including all permits, licenses, approvals, entitlements, variances, exemptions, and other governmental authorizations applicable to the ownership, development, construction, use, operation or maintenance of all or any portion of the Premises, including any development agreement, indemnity, surety or performance bond or other similar assurances to governmental agencies in connection with the obtaining of entitlements and other governmental approvals for the Premises. The Laws include the Hazardous Materials Laws and the Grand Avenue Project Mitigation & Regulatory Measures, Project Design Features and Conditions of Approval applicable to the Project.

"**Lease**" shall mean this Ground Lease.

"**Lease Consideration**" shall have the meaning set forth in Section 4.2.

"**Leasehold Acquisition Fee**" shall have the meaning set forth in Section 4.2.1.

"**Lessee**" shall have the meaning set forth in the first paragraph of this Lease.

"**Lessee Managing Member**" shall mean the managing member of Lessee, which shall initially be Related/Parcel M.

"**Lessee's Operating Agreement**" shall have the meaning set forth in Section 11.2.1.

"**Letter of Credit**" shall mean that certain irrevocable standby letter of credit issued by Bank of America, N.A. in the amount of [$21,000,000] securing repayment of a portion of the Senior Loan.

"**Lower Income Household**" means a household with an adjusted income that does not exceed the qualifying limits for lower income families, as established and amended form time to time, adjusted for actual household size, pursuant to Section 8 of the United States Housing Act of 1937, and as published by the State of California Department of Housing and Community Development.

"**Map**" shall have the meaning set forth in the Recitals.

"**Market Rate Parcel Ground Lease**" shall have the meaning set forth in the Recitals.

"**Market Rate Parcel Owner**" shall have the meaning set forth in the Recitals.

"**Market Rate Parcels**" shall have the meaning set forth in the Recitals.

"**Market Rate Rental Improvements**" means all of the Phase IIB Improvements (including, without limitation, the 215 Market Rate Rental Units, the Retail Improvements, the Parking Garage, and one hundred percent (100%) of the common areas and other public spaces of the Phase IIB Improvements) other than the Affordable Housing Rental Improvements.

"**Market Rate Rental Units**" means the rental housing units in the Phase IIB Improvements that are not Affordable Housing Units.

"**Market Rate Transfer**" shall have the meaning set forth in Section 11.3.1.

"Median Income" shall mean the median gross yearly income, adjusted for actual household size, in the Los Angeles PMSA as determined by the U.S. Department of Housing and Urban Development ("**HUD**") and as published from time to time by the State of California Department of Housing and Community Development ("**HCD**"). In the event that such income determinations are no longer published, or are not updated for a period of at least eighteen (18) months, Authority shall provide Lessee with other income determinations which are reasonably similar with respect to methods of calculation to those previously published by HUD.

"**Minimum Net Worth**" shall have the meaning set forth in Section 7.1.1.

"**Mortgage**" means any mortgage, deed of trust, pledge, encumbrance or other security interest, together with all amendments, modifications, supplements, restatements and/or replacements from time to time, granted to a lender not Affiliated with Lessee, made in good faith and for fair value, encumbering all or any part of Lessee's interest in this Lease, the DDA, the Project Documents, the Improvements or the Premises. "Mortgage" shall not include any mortgage, deed of trust, pledge, encumbrance or other security interest granted to a lender (i) in which Lessee or an Affiliate of Lessee has an interest of 20% or more, or (ii) which has an interest of 20% or more in Lessee or an Affiliate of Lessee. Notwithstanding the foregoing, the deed of trust securing repayment of the 7.7 Million Dollar Loan and the deed of trust securing repayment of the Letter of Credit shall each constitute a Mortgage hereunder.

"**Mortgagee**" means any mortgagee, beneficiary under any deed of trust, trustee of any bonds, and, if the Premises is the subject of a sale-leaseback transaction, the person acquiring fee title to the Premises.

"**Net Awards and Payments**" shall have the meaning set forth in Section 6.7.

"**Notice of Completion**" shall have the meaning set forth in Section 5.11.

"**Notice of Default**" shall have the meaning set forth in Section 13.2.

"**Offsite Publicly Owned Improvements**" means the public improvements for areas outside of the Premises that are required to be constructed and/or maintained by Lessee in connection with Phase IIB and that are described on Schedule 2.1.13, including, without limitation, the Grand Promenade Easement Improvements.

"**Parking Garage**" means a parking facility containing approximately 280 parking spaces for renters of the Market Rate Rental Units.

"**Partial Taking**" shall have the meaning set forth in Section 6.1.6.

"**Permitted Uses**" shall have the meaning set forth in Section 3.1.

"**Phase IIB**" shall have the meaning set forth in the second Recital of this Lease.

"**Phase IIB Improvements**" shall have the meaning set forth in the fourth Recital of this Lease; provided, however, at any time after execution and Recordation of the Market Rate Parcel Ground Lease, the Phase IIB Improvements shall refer only to the Affordable Housing Rental Improvements.

"**Phase IIB REA**" shall have the meaning set forth in the Recitals

"**Possession Delivery Date**" shall have the meaning set forth in Section 2.1.

"**Premises**" shall have the meaning set forth in the second Recital of this Lease; provided, however, at any time after execution and Recordation of the Market Rate Parcel Ground Lease, the Premises shall refer only to the Affordable Housing Parcels, as such parcels are more particularly described on Exhibit "F" attached hereto.

"**Project**" means the Phase IIB portion of the Grand Avenue Project contemplated in the DDA.

"**Project Area**" means the Bunker Hill Redevelopment Project Area.

"**Project Documents**" shall have the meaning set forth in Section 2.1.2.

"**Qualified Owner**" shall have the meaning set forth in Section 11.3.

"**Qualified Phase IIB Developer**" shall have the meaning set forth in Section 11.2.

"**Recordation**" means recordation in the Official Records of the County of Los Angeles, California.

"**Redevelopment Plan**" means that certain Redevelopment Plan for the Bunker Hill Redevelopment Project Area in the City of Los Angeles, State of California, which was approved and adopted by the City Council by Ordinance No. 113,231 on March 31, 1959; amended January 12, 1968 by Ordinance No. 135,900; and amended June 25, 1970, by Ordinance No. 140,662.

"**Reference Rate**" means the prime rate of interest or other equivalent reference rate from time to time announced by the Bank of America, N.A. (or if Bank of America, N.A. ceases to exist or ceases to announce a prime or reference rate, then the prime or reference rate announced from time to time by the largest California state chartered bank in terms of assets).

"**Related**" means The Related Companies, L.P., a New York limited partnership.

"**Related Key Personnel**" means William Witte, Stephen M. Ross and Kenneth A. Himmel.

"**Related/Parcel M**" means Related/Parcel M Development Co., LLC, a California limited liability company.

"**Release**" means any spilling, leaking, pumping, pouring, emitting, emptying, discharging, injecting, escaping, leaching, dumping, or disposing into the environment (including the abandonment or discarding of barrels, containers, and other closed receptacles containing any Hazardous Materials).

"**Renovation Standard**" shall have the meaning set forth in Section 5.9.

"**Reply**" shall have the meaning set forth in Section 16.5.

"**Residential Improvements**" means the residential rental units to be constructed in Phase IIB (i.e., the Market Rate Rental Units and the Affordable Housing Units), and all related residential amenities and common areas.

"**Responding Party**" shall have the meaning set forth in Article 16.

"**Retail Improvements**" means approximately 5,500 square foot indoor restaurant space plus approximately 1,750 square feet of outdoor restaurant patio area (totaling approximately 7,250 square feet of restaurant space).

"**Section**" shall mean a section of this Lease.

"**Senior Loan**" means that certain loan from the City of Los Angeles to the Lessee in the original principal amount of [$_____], which loan was made by the City of Los Angeles with the proceeds from the issuance of tax exempt mortgage revenue notes to Citibank, N.A., and which is partially secured by the Letter of Credit.

"**Shall**" and "**will**" are mandatory and the word "**may**" is permissive.

"**Sixty Percent Household**" means a household with an adjusted income that does not exceed sixty percent (60%) of the Median Income, adjusted for actual household size.

"**Sixty Percent Household Unit**" means an Affordable Housing Unit reserved for occupancy by a Sixty Percent Household.

"**State**" means the State of California.

"**Statement of Position**" shall have the meaning set forth in Section 16.6.

"**STRS**" means STRS Ohio CA Real Estate Investments II, LLC, a Delaware limited liability company, or any successor or assign thereof.

"**Subdivision**" shall have the meaning set forth in the Recitals.

"**Subsequent Renovation**" shall have the meaning set forth in Section 5.9.

"**Subsequent Renovation Plan**" shall have the meaning set forth in Section 5.9.

"**Sublease**" means any lease, license, permit, concession or other interest in the Premises, or a right to use the Premises or a portion thereof, which is conveyed or granted by Lessee to a third party, and which constitutes less than the unrestricted conveyance of the entire Lessee's interest under this Lease.

"**Sublessee**" means the person or entity to whom such right to use is conveyed by a Sublease.

"**Temporary Taking**" shall have the meaning set forth in Subsection 6.1.7.

"**Term**" shall have the meaning set forth in Section 2.1.

"**Title Company**" shall mean [Old Republic Title Company,] or any other title insurance company selected by Lessee.

"**Transfer**" shall have the meaning set forth in Section 11.1.2(1).

"**Total Taking**" shall have the meaning set forth in Subsection 6.1.5.

"**Uninsured Loss**" shall have the meaning set forth in Section 10.3.

"**Very Low Income Household**" means a household with an adjusted income that does not exceed the qualifying limits for very low income households, adjusted for actual household size, as established and amended from time to time pursuant to Section 8 of the United States Housing Act of 1937, and as published by the State of California Department of Housing and Community Development.

"**Very Low Income Unit**" means an Affordable Housing Unit reserved for occupancy by a Very Low Income Household.

"**Written Appraisal Evidence**" shall have the meaning set forth in Section 16.7.

2. **TERM**.

2.1 **Term**. The term of this Lease (the "**Term**") shall commence upon the full execution and approval of this Lease and the DDA Third Amendment by the Governing Entities (the "**Commencement Date**"). The Term shall continue until and expire at 11:59 p.m. on the date which is ninety-nine (99) years less two (2) days from the Commencement Date, unless terminated sooner in accordance with the provisions of this Lease. Notwithstanding anything to the contrary set forth in this Lease, if the Commencement Date has not occurred within five (5) years after the date hereof, then this Lease shall terminate as of said date. Promptly on request by either party, the parties shall confirm the Commencement Date and expiration date of this

Lease in a written memorandum that is recorded in the Official Records of Los Angeles County. Although the Commencement Date shall have occurred, possession of the Premises shall not be tendered to Lessee unless and until the date (the "**Possession Delivery Date**") that (a) Lessee satisfies all obligations of Lessee set forth in Sections 2.1.1 through 2.1.13 below (other than the continuing obligations of Lessee under Section 2.1.12 that cannot be satisfied prior to the Possession Delivery Date), (b) all approvals from the Authority, CRA, County and other Governing Entities (as applicable) described in Sections 2.1.1 through 2.1.13 have been received, and (c) all other conditions to the Commencement of Construction set forth in Sections 2.1.1 through 2.1.13 have been satisfied. If the Possession Delivery Date has not occurred within one (1) year after the Commencement Date, then Authority shall have the right to terminate this Lease by written notice to Lessee at any time prior to the Possession Delivery Date. Lessee represents and warrants to the best of its knowledge that each of the conditions set forth in clauses (a)-(c) above have been satisfied.

2.1.1 Scope of Development**.**

The approved Scope of Development for the Project is attached hereto as Schedule 5.1(A). Any changes to such approved Scope of Development shall be subject to the review and approval of the Governing Entities, which approval shall not be unreasonably withheld or delayed. In designing and constructing the Project, Lessee shall cause all subsequent design documents to be substantially consistent with the approved Scope of Development and the approved Concept Design Drawings listed on Exhibit "K" to the DDA unless otherwise approved by the Authority. The Scope of Development establishes the baseline design standards from which the Lessee shall prepare all subsequent Project Documents.

2.1.2 Schedule of Performance**.**

Lessee shall have caused its architect, in collaboration with its public artist or artists, to prepare Schematic Design Drawings, Design Development Drawings and Final Construction Documents for the Project, consistent with the Scope of Development including, without limitation, such drawings as may reasonably be required to show the location, bulk, height and other principal external features of the Project. In connection with its submittal to the Authority for its review, Lessee shall have provided to Authority such elevations, sections, plot plans, specifications, diagrams and other design documents ("**Project Documents**") at each of the stages described herein, as may reasonably be required by the Authority for its review. Within the times set forth in the Schedule of Performance attached hereto as Schedule 5.1(B), Lessee shall have submitted all Project Documents to Authority.

2.1.3 Drawings and Related Design Material**.**

Within the times set forth in the Schedule of Performance, Lessee shall have submitted to Authority the Project Documents in stages for Authority's review and approval (if applicable) as provided in and in compliance with Section 404 of the DDA.

2.1.4 Authority Approval of Plans, Drawings and Related Documents**.**

Authority shall have reviewed and approved (if applicable) the Project Documents

as provided in and in compliance with Section 405 of the DDA. Any review or approval or inspections by the Governing Entities is solely for determining if Lessee is properly discharging its duties and shall not be relied upon by Lessee or any third party as a warranty or representation by any of the Governing Entities as to the quality or suitability of the design or construction of the Project.

Lessee shall have, in accordance with the Schedule of Performance, executed and delivered to Authority the Architect's Assignment in the form of Exhibit "L" to the DDA.

2.1.5 Construction Budget; Construction Financing.

Lessee shall have prepared and submitted to Authority a proposed final construction budget for the Phase IIB Improvements, the Authority shall have approved each line item of the proposed budget pertaining to the Offsite Publicly Owned Improvements required to be constructed by Lessee, and the Authority shall have approved the proposed budget pertaining to the privately owned improvements (in total and not on a line-by-line basis), in each case as provided in and in compliance with Section 408(2) of the DDA.

2.1.6 City and Other Governmental Authority Permits.

Lessee shall have secured or caused to be secured any and all permits which may be required by the City or any other governmental agency regulating construction, development or work on the Premises, as required for the Commencement of Construction.

2.1.7 Zoning of the Premises.

Lessee shall have ensured that the zoning of the Premises is such as to permit the development and use of the Premises in accordance with the provisions of this Lease, as provided in and in compliance with Section 411 of the DDA.

2.1.8 Insurance.

Lessee shall have submitted evidence of its compliance with Authority's insurance requirements, as set forth in Article 9 of this Lease.

2.1.9 Construction Financing.

Lessee shall have submitted to the Authority evidence of a commitment from an Institutional Lender to provide construction financing that together with the proceeds of the Affordable Housing Loan and the 7.7 Million Dollar Loan will be sufficient to cover the total cost of the Phase IIB Improvements (or evidence that Lessee has capital commitments together with such financing sufficient to cover the cost of the construction of the Phase IIB Improvements).

2.1.10 Completion Guaranty.

Lessee shall have delivered to Authority a "**Completion Guaranty**" executed by Related as provided in and meeting the requirements of Section 417 of the DDA.

2.1.11 Completion Bonds.

If required by Section 418 of the DDA and subject to Section 5.4.4, Lessee shall have delivered to Authority copies of labor and material bonds and payment and performance bonds, as provided in and in compliance with Section 418 of the DDA.

2.1.12 Prevailing Wages**.**

Lessee must comply with the CRA's Prevailing Wage and Equal Opportunity Standards. Lessee shall pay or cause to be paid to all workers employed in connection with the construction of the Project, not less than the prevailing rates of wages, as provided in the statutes applicable to CRA's public work contracts, including without limitation Sections 33423-33426 of the California Health and Safety Code and Sections 1770-1880 of the California Labor Code, in accordance with the CRA's "Policy on Payment of Prevailing Wages By Private Redevelopers or Owners-Participants" dated February 1986. In addition to any restitution required by the CRA's Policy and/or applicable Law, Lessee or any owner determined by Authority to have violated any provision of CRA's Policy on Payment of Prevailing Wages by Private Redevelopers or Owners-Participants, shall forthwith pay the following as a penalty to the Authority:

(1) Payment of less than prevailing wages: $50 per calendar day, or portion thereof, for each worker paid less than prevailing wages.

(2) Failure to provide all reasonably requested records and/or provide access to job site or workers: $5,000 per day, or portion thereof.

(3) If the construction work covered under this Lease is financed in whole or in part with assistance provided under a program of the U.S. Department of Housing and Urban Development or some other source of Federal funding, Lessee shall comply with or cause its contractor and all subcontractors to comply with the requirements of the Davis-Bacon Act (40 U.S.C. 276 et seq.) The Davis-Bacon Act requires the payment of wages to all laborers and mechanics at a rate not less than the minimum wage specified by the Secretary of Labor in the periodic wage rate determinations as described in the Federal Labor Standards Provisions (HUD-4010) available from Authority's Compliance Division.

(4) Prior to the commencement of grading work in connection with the construction of the Phase IIB Improvements, and as soon as practicable in accordance with the Schedule of Performance, Lessee shall contact Authority to schedule a pre-construction orientation meeting with Lessee and with the general contractor to explain such matters as the specific rates of wages to be paid to workers in connection with the development of the Project, preconstruction conference requirements, record keeping and reporting requirements necessary for the evaluation of Lessee's compliance with this Section 2.1.12.

(5) Lessee shall monitor and enforce the prevailing wage requirements imposed on its contractors and subcontractors, including withholding payments to those contractors or subcontractors who violate these requirements. In the event that Lessee fails to monitor or enforce these requirements against any contractor or subcontractor, Lessee shall be liable for the full amount of any underpayment of wages, plus costs and attorneys' fees, as if

Lessee was the actual employer, and Authority may withhold monies owed to Lessee, may impose penalties on Lessee in the amounts specified herein, may take action directly against the contractor or subcontractor as permitted by law, and/or may declare Lessee in default of this Lease and pursue any of the remedies available under this Lease.

(6) Any contractor or subcontractor who is at the time of bidding debarred by the Labor Commissioner pursuant to Section 1777.1 of the California Labor Code is ineligible to bid on the construction of the Phase IIB Improvements or Alterations or to receive any contract or subcontract for work covered under this Lease. Any contractor or subcontractor who is at the time of the contract listed in the List of Parties Excluded From Federal Procurement or Nonprocurement Programs issued by the U.S. General Services Administration pursuant to Section 3(a) of the Davis-Bacon Act is ineligible to receive a contract for work covered under this Lease.

(7) By entering into this Lease, Lessee certifies that it is not a person or firm ineligible to be awarded Government contracts by virtue of Section 3(a) of the Davis-Bacon Act or 29 CFR 5.12(a)(1) or to be awarded HUD contracts or participate in HUD programs pursuant to 24 CFR Part 24. Lessee agrees to include, or cause to be included, the above provision, to be applicable to contractors and subcontractors, in each contract and subcontract for work covered under this Lease.

(8) For the purposes of assuring compliance with the provisions of this Section 2.1.12, representatives of Authority, the CRA, the City, and the County shall have the reasonable right of access and inspection, without charges or fees and at normal construction hours, to any construction trailer located on the Premises where relevant records are kept by Lessee or its contractors. The representatives of Authority, CRA or the City shall be those who are so identified in writing by Authority or its designee. The CRA and the City shall indemnify and pay for the defense of Lessee and hold it harmless from any damage caused or liability arising out of this right to access and inspection.

(9) Lessee agrees to include, or cause to be included, the requirements of this Section 2.1.12 in all bid specifications for work covered under this Lease and to be applicable to all contractors and subcontractors, in each contract and subcontract for work covered under this Lease.

(10) Lessee shall indemnify, hold harmless and defend (with counsel reasonably acceptable to Authority) the Authority Indemnified Parties against any claim for damages, compensation, fines, penalties or other amounts arising out of the failure or alleged failure of any person or entity (including Lessee, its contractor and subcontractors) to pay prevailing wages as determined pursuant to Labor Code Sections 1720 et seq. and implementing regulation or comply with the other applicable provisions of Labor Code Sections 1720 et seq. and implementing regulations of the Department of Industrial Relations in connection with construction of the Phase IIB Improvements, Alterations or any other work undertaken or in connection with the Premises.

2.1.13 Art Plan**.**

Lessee's art budget shall equal one percent (1%) of the total development costs of the Project. Without limiting the generality of the foregoing, the parties acknowledge that (a) thirty-five (35%) of the funds required to be spent by Lessee for art shall be used for the construction of art improvements subject to an art plan approved by the CRA, and (b) sixty-five percent (65%) of the funds required to be spent by Lessee shall be paid to the Phase IIA Developer (as defined in the DDA) at the direction of the CRA. The art improvements required to be constructed by Lessee pursuant to this Section 2.1.13 shall consist of landscaping which will be located on certain real property more specifically described in Schedule 2.1.13 hereto (the "**Grand Promenade Easement Area**") and shall be referred to collectively as the "**Grand Promenade Easement Improvements**." Notwithstanding the foregoing, Lessee's obligation to construct the Grand Promenade Easement Improvements shall be subject to Lessee's receipt of the prior written consent of the owner of the Grand Promenade Easement Area to the construction of the Grand Promenade Easement Improvements on the Grand Promenade Easement Area, and permission to enter the Grand Promenade Easement Area for such purpose. Lessee shall use reasonable efforts to obtain such permission and consent and the Authority shall cooperate in such efforts. In the event Lessee is unable to obtain and provide the foregoing consent and permission within a reasonable period of time, Lessee shall have no obligation to construct the Grand Promenade Easement Improvements and the portion of the art fees set aside for such construction shall be used for the construction of art improvements subject to an art plan approved by the CRA.

2.2 **Ownership of Improvements During Term**. Until the expiration of the Term or sooner termination of this Lease, and except as specifically provided herein, Lessee shall own fee title to all at grade, above grade and below grade structures, buildings, improvements, additions, alterations, and betterments of whatsoever nature or description, including without limitation concrete foundations, pilings, walkways, and pavement now existing (the "**Existing Improvements**") and all Improvements hereafter constructed by or on behalf of Lessee upon the Premises. It is the purpose and intent of the Authority and Lessee that Lessee shall be accorded all the burdens and benefits of ownership of the Phase IIB Improvements throughout the Term. Accordingly, at all times during the Term, Lessee shall be deemed to exclusively own the Phase IIB Improvements for federal tax purposes, and Lessee alone shall be entitled to all of the tax attributes of ownership thereof including, without limitation, the right to claim depreciation or cost recovery deductions, the right to claim federal low-income housing tax credits available to Lessee under Section 42 of the Internal Revenue Code of 1986, as amended, with respect to the Phase IIB Improvements, and the right to amortize capital costs and to claim any other federal tax benefits attributable to the Phase IIB Improvements. No Improvements shall be demolished or removed from the Premises during or at the expiration or earlier termination of the Term of this Lease, except in connection with the construction of the Phase IIB Improvements following the Possession Delivery Date or in connection with subsequent Alterations performed in accordance with the provision of Article 5 of this Lease.

2.3 **Reversion of Improvements**. Upon the expiration of the Term or sooner termination of this Lease, whether by cancellation, forfeiture or otherwise:

2.3.1 Authority's Receipt of Improvements. All Improvements then existing on the Premises shall remain upon and be surrendered with the Premises as part thereof and title thereto shall vest in Authority without compensation therefor to Lessee. Lessee shall not be

responsible for any removal by an easement holder of any Improvements that may be owned by and constructed on the Premises by such easement holder pursuant to an easement granted to such easement holder by Authority. Nothing contained herein shall be construed to deny or abrogate the right of Lessee, prior to the expiration of the Term or termination of this Lease, to receive any and all proceeds attributable to the Condemnation (as defined in Section 6.1.1 below) of business installations or Improvements belonging to Lessee immediately prior to the taking of possession by the Condemnor as said rights are set forth in Article 6 of this Lease, or to remove any furniture or equipment not intended to be permanently affixed to, or reasonably necessary for the operation of, the Premises, any signage identifying Lessee or a Sublessee (as opposed to other signage used in the operation of the Premises and associated Improvements), or any personal property, upon the expiration of the Term or earlier termination of this Lease, subject to Lessee's obligations under this Lease to use the Premises for the Permitted Uses (as defined in Section 3.1 below). In addition, nothing contained herein shall be construed to deny a Sublessee any right that such Sublessee may have under its Sublease to remove any so-called Sublessee "trade-dress" items installed in or on the subleased premises by such Sublessee. Lessee shall be responsible for repairing (or causing its Sublessees to repair) any damage to the Improvements on the Premises incurred in connection with the removal from the Premises of any of the items described in this Section 2.3.1.

2.3.2 Reserved.

2.3.3 Reserved.

2.3.4 Duty to Remove Equipment, Etc. No later than the expiration of the Term or sooner termination of this Lease, Lessee shall remove at its cost and expense such furniture, equipment and personal property as are owned by Lessee and not firmly affixed to said Improvements or reasonably necessary for the orderly operation of the Premises. The items removed shall not include operating equipment for the parking improvements, which equipment shall not be removed. Should Lessee fail to so remove said furniture, equipment and personal property within said period, and said failure continues for ten (10) days after written notice from Authority to Lessee, Lessee shall lose all right, title and interest in and thereto, and Authority may elect to keep the same upon the Premises or to sell, remove, or demolish the same, in event of which sale, removal, or demolition Lessee shall reimburse Authority for its Actual Cost incurred in connection with such sale, removal or demolition in excess of any consideration received by Authority as a result of said sale, removal or demolition.

2.3.5 Title to Certain Improvements Passes to Authority; Lessee to Maintain. By way of clarification, as between Authority and Lessee, title to all utility lines, transformer vaults and all other utility facilities constructed or installed by Lessee upon the Premises shall vest in Authority upon construction or installation to the extent that they are not owned by a utility. Notwithstanding the foregoing sentence, as between Lessee and Authority, Lessee shall be responsible for performing (or causing the appropriate utility provider to perform) the maintenance, repair and replacement, if and as needed, of such utility lines, transformer vaults and all other utility facilities during the Term.

3. **USE OF PREMISES**.

3.1 **Specific Primary Use**. The Premises shall be used by Lessee for the construction, repair, maintenance, operation and management of (i) the Retail Improvements, (ii) the Residential Improvements, and (iii) the Parking Garage (collectively, the foregoing shall be referred to herein as the "**Permitted Uses**"), and such other related and incidental uses as are specifically approved by Authority, which approval shall not be unreasonably withheld, conditioned or delayed by Authority as long as such other related or incidental use is consistent with the Permitted Uses. Except as expressly provided herein, the Premises shall not be used for any purpose other than the Permitted Uses, without the prior written consent of Authority in its sole discretion. Authority makes no representation or warranty regarding the continued legality of the Permitted Uses or any of them, and Lessee bears all risk of an adverse change in Laws.

3.2 **Prohibited Uses**. Notwithstanding the foregoing:

3.2.1 Nuisance. Lessee shall not conduct or permit to be conducted any private or public nuisance on or about the Premises, nor commit any waste thereon. No rubbish, trash, waste, residue, brush, weeds or undergrowth or debris of any kind or character shall ever be placed or permitted to accumulate upon any portion of the Premises, except in appropriate receptacles intended for such purposes, nor shall any portion of the Premises be maintained so as to render said Premises a fire hazard or unsanitary, unsightly, offensive, or detrimental nor shall any similar activity be permitted on any other portion of the Premises or on any adjacent public street or adjacent property.

3.2.2 Restrictions and Prohibited Uses. Without expanding upon or enlarging the Permitted Uses of the Premises as set forth in this Lease, the following uses of the Premises are expressly prohibited:

(1) The Premises shall not be used or developed in any way which is inconsistent with any Laws;

(2) The Premises shall not be used or developed in any way in a manner inconsistent with the Permitted Uses. Without limiting the foregoing, no part of the Premises shall be used by any person for any adult entertainment purposes, as such term refers to graphic, explicit and/or obscene depictions of sexual activity;

(3) No Improvement on the Premises shall be permitted to fall into disrepair and all Improvements shall at all times be kept in good condition and repair consistent with the requirements of Section 10.1 of this Lease;

(4) No condition shall be permitted to exist upon the Premises which shall induce, breed or harbor infectious plant diseases, rodents, or noxious insects and Lessee shall take such measures as are appropriate to prevent any conditions from existing on the Premises which create a danger to the health or safety of any persons residing or working at, or persons patronizing, the Premises; this Subsection 3.2.2(4) shall not be construed to prevent Lessee from using the Premises for normal restaurant operations, provided that Lessee takes (or causes to be taken) all actions or measures required to comply with this Subsection 3.2.2(4);

(5) Without the prior written approval of Director, no antennae or other device for the transmission or reception of television signals or any other form of electromagnetic radiation shall be erected, used or maintained by Lessee outdoors above ground on any portion of the Premises, whether attached to an Improvement or otherwise. Director will approve the installation of one or more satellite antennae on the roof of the Residential Improvements as long as such antennae comply with Laws, do not extend above the roofline or parapet at the top of the building perimeter, are screened from view in a manner acceptable to Director and do not interfere with other electromagnetic transmission;

(6) No tools, equipment, or other structure designed for use in boring for water, oil, gas or other subterranean minerals or other substances, or designed for use in any mining operation or exploration, shall hereafter be erected or placed upon or adjacent to the Premises, except as is necessary to allow Lessee to perform its maintenance and repair obligations pursuant to this Lease;

(7) Lessee shall not use the Premises or allow the Premises to be used for the generation, manufacture, storage, disposal, or Release of Hazardous Materials, except for the storage and use, in customary amounts, of normal cleaning supplies and other items that are generally used in connection with the construction and operation of improvements similar to the Grand Avenue Project, so long as such materials are used and stored in accordance with Hazardous Materials Laws; and

(8) The Premises shall not be used for fuel sales.

3.3 **Active Public Use**. Lessee agrees and covenants that it will operate the Premises fully and continuously (other than during periods when Lessee is prevented from doing so due to Force Majeure (as defined in Section 5.10 below) or reasonable periods during which the applicable Improvements are under construction or alteration) consistent with the operation of top quality retail and/or restaurant establishments, top quality high rise rental units, and high quality Affordable Housing Units.

3.4 **Days of Operation**. The Improvements on the Premises shall be open every day of the year; provided, however, that businesses operated by Sublessees or by Lessee shall not be obligated to remain open for business to the public on holidays or other days on which other comparable facilities are closed for business.

3.5 **Signs and Awnings**. Any and all art, displays, identifications, monuments, awnings, advertising signs and banners which are placed on, or are visible from, the exterior of the Premises, shall be in compliance with all Laws applicable to the Premises.

3.6 **Compliance with Regulations**. Lessee shall comply with all Laws and shall pay for and maintain any and all licenses and permits related to or affecting the use, operation, maintenance, repair or improvement of the Premises.

3.7 **Reservations**. Lessee expressly agrees that this Lease and all rights hereunder shall be subject to all prior encumbrances, reservations, licenses, easements and rights of way in, to, over or affecting the Premises for any purpose whatsoever that are existing as of the date

hereof and that either (i) are of record, (ii) have been disclosed to Lessee in writing or are otherwise known to Lessee, (iii) would be apparent or discoverable by an ALTA survey of the Premises, or (iv) are otherwise referenced in this Lease. Without limiting the foregoing, Lessee expressly agrees that this Lease and all rights hereunder shall be subject to the rights of the Governing Entities existing as of the Commencement Date or otherwise disclosed to or known to Lessee, as their interests may appear, to install, construct, maintain, service and operate sanitary sewers, public roads and sidewalks, fire access roads, storm drains, drainage facilities, electric power lines, telephone lines and access and utility easements, across, upon or under the Premises, together with the right of the Governing Entities to convey such easements or other access or utility easements of any and all manner and description currently in use or to be discovered, invented, or developed in the future, and transfer such rights to others.

3.8 **Continued Responsibility for Mitigation Measures**. Lessee shall be responsible for compliance with the Project description as approved in the final EIR, the Mitigation and Monitoring Program approved as part of the certification of the EIR, and related conditions of approval adopted by the Governing Entities with respect to Phase IIB concurrently with approval of the Original DDA as set forth in Exhibit "E" attached hereto.

4. PAYMENTS TO AUTHORITY.

4.1 **Net Lease**. The parties acknowledge that the payments to be made by Lessee under this Lease are intended to be absolutely net to Authority. The Lease Consideration and other sums to be paid to Authority hereunder are not subject to any demand, set-off or other withholding. Authority shall not be responsible for any capital or non-capital costs, including without limitation, repairs or replacements respecting the Premises or Improvements (whether structural or non-structural), operating expenses attributable to the operation and maintenance of the Premises or Improvements, including without limitation the parking areas included within the Premises, costs for utilities or services, or any other costs or expenses pertaining to the ownership, occupancy or use of the Premises and Improvements, all of which shall be the sole responsibility of Lessee from and after the Possession Delivery Date.

4.1.1 Utilities. In addition to the Lease Consideration as herein provided, Lessee shall pay all utility and service charges for furnishing water, power, sewage disposal, light, telephone service, garbage and trash collection and all other utilities and services, to the Premises, from and after the Possession Delivery Date.

4.1.2 Taxes and Assessments. From and after the Possession Delivery Date, Lessee agrees to pay before delinquency all taxes, assessments, fees, or charges which at any time may be levied by the State, County, City or any tax or assessment levying body upon any interest in this Lease or any possessory right which Lessee may have in or to the Premises covered hereby or to the Improvements thereon for any reason, as well as all taxes, assessments, fees, and charges on goods, merchandise, fixtures, appliances, equipment, and property owned by Lessee in, on or about the Premises. Lessee shall have the right to contest the amount of any assessment imposed against the Premises or the possessory interest therein; provided, however, the entire expense of any such contest (including interest and penalties which may accrue in respect of such taxes) shall be the responsibility of Lessee.

The parties acknowledge that the Premises are and shall be subject to possessory interest taxes, and that such taxes shall be paid by Lessee, as the party in which the possessory interest is vested. This statement is intended to comply with Section 107.6 of the Revenue and Taxation Code. Lessee shall include a statement in all Subleases (excluding Subleases for individual residential units) to the effect that the interests created therein may also be subject to possessory interest taxes, and that the Sublessee shall be responsible for any and all possessory interest taxes on the Sublessee's interest; however, Lessee acknowledges that the payment of such possessory interest taxes is the ultimate responsibility of Lessee.

The parties further acknowledge that Lessee shall pay taxes upon the assessed value of the entire property and not merely the assessed value of its leasehold interest, in compliance with California Health & Safety Code Section 33673, which provides in pertinent part that "[w]henever property in any redevelopment project has been redeveloped and thereafter is leased by the redevelopment agency to any person or persons or whenever the agency leases real property in any redevelopment project to any person or persons for redevelopment, the property shall be assessed and taxed in the same manner as privately owned property, and the lease or contract shall provide that the lessee shall pay taxes upon the assessed value of the entire property and not merely the assessed value of his or its leasehold interest."

4.2 **Lease Consideration**. For the possession and use of the Premises granted herein, Lessee shall pay the Authority the Leasehold Acquisition Fee and First Sale Profit Payment Rent (as such terms are hereinafter defined). The Leasehold Acquisition Fee and First Sale Profit Payment Rent are referred to herein collectively as the "**Lease Consideration**." The First Sale Profit Payment Rent and all other sums due under this Lease, except for the Leasehold Acquisition Fee, are referred to collectively in this Lease as "**rent**."

4.2.1 The "**Leasehold Acquisition Fee**" shall be calculated by Authority and payable by Lessee as set forth in the DDA. The Authority shall credit Five Million Two Hundred Twenty Thousand Dollars ($5,220,000) in funds previously paid to Authority by an affiliate of Lessee toward the payment of the Leasehold Acquisition Fee. Of the total Leasehold Acquisition Fee, Ninety-Nine Dollars ($99) shall be allocated to the Lessee's sub-leasehold interest in the Affordable Housing Parcels and the balance of such fee shall be allocated to the Market Rate Parcel Owner's sub-leasehold interest in the Market Rate Parcels.

4.2.2 As "**First Sale Profit Payment Rent**", Lessee shall pay to Authority, upon the first to occur of (i) the Sale of the Market Rate Rental Improvements or (ii) the Sale of the entirety of the Phase IIB Improvements, fifty percent (50%) of the Net Sale Profits. For the purpose of illustration and clarification, Exhibit "H" attached hereto sets forth sample calculations of First Sale Profit Payment Rent. The following terms shall have the following meanings for the purposes of this Section 4.2.2:

4.2.3 "**Deemed Leasehold Acquisition Fee Payment**" means the amount equal to Five Million Two Hundred Twenty Thousand Dollars ($5,220,000) which represents funds previously paid to the Authority by an affiliate of Lessee toward the payment of the Leasehold Acquisition Fee.

4.2.4 "**Deferred Development Fee**" means any portion of the developer fee payable to Lessee in connection with the development of the Market Rate Rental Improvements which was not paid from development sources, and any accrued interest thereon. The Deferred Development Fee shall not exceed the sum of Two Million Sixty-Four Thousand Eight Hundred Eighty-Six Dollars ($2,064,886), minus any portion of such development fee paid upon or following closing of the Senior Loan, upon which deferred amount no interest shall accrue or be payable.

4.2.5 "**Development Deficit Advance**" means any loan or capital contribution made to the Lessee to fund development cost overruns associated with the Market Rate Rental Improvements, and any accrued interest thereon.

4.2.6 "**Distributable Cash**" means, for any period, Operating Receipts less Operating Expenses.

4.2.7 "**Gross Sale Proceeds**" means the gross sale proceeds received by the Lessee from the Sale of the Market Rate Rental Improvements.

4.2.8 "**IRR**" means the annual discount rate, compounded monthly, at which the net present value as of the Senior Loan Closing Date of all Distributable Cash (discounted at such rate from the dates such Distributable Cash was actually received and was available for distribution), is equal to the net present value as of the Senior Loan Closing Date of the Phase IIB Developer Equity Investment. For the purposes of calculating IRR, Distributable Cash shall be deemed to be available for distribution on a quarterly basis in arrears based upon the Distributable Cash of the prior calendar quarter.

4.2.9 "**Net Sale Profit**" means an amount equal to the Gross Sale Proceeds less the following: (i) payment of actual third party costs and expenses incurred in connection with the Sale, including, without limitation, title and escrow fees, documentary transfer taxes, legal and accounting fees, marketing expenses and brokerage commissions (which commissions shall not exceed two percent (2%) of the Gross Sale Proceeds); (ii) payment of any outstanding amount of the Senior Loan, including, without limitation, repayment of outstanding principal and interest on any such debt and the payment of any fees and/or expenses imposed in connection with the repayment of such Senior Loan, including, without limitation, any prepayment penalties; (iii) payment of any outstanding Development Deficit Advances, Operating Deficit Advances and/or Deferred Development Fee; (iv) payment to the Lessee of an amount equal to the Deemed Leasehold Acquisition Fee Payment; (v) payment to the Lessee of an amount equal to the Senior Letter of Credit Draw Amount; and (vi) payment to the Lessee of an amount which would cause Lessee to receive a twenty percent (20%) IRR on the Phase IIB Developer Equity Investment when taking into account all prior Distributable Cash received by Lessee.

4.2.10 "**Operating Deficit Advance**" means any loan or capital contribution made to the Lessee to fund operating deficits associated with the Market Rate Rental Improvements, and any accrued interest thereon.

4.2.11 "**Operating Expenses**" for a particular period means all sums actually paid by or on behalf of the Lessee during that period in connection with the owning, financing,

leasing, management, maintenance, or repair or operation of the Market Rate Rental Improvements, including, but not limited to (but only to the extent actually paid by or on behalf of the Lessee or deposited to a reserve in that period): (a) any debt service, whether principal, interest or otherwise, and letter of credit and other financing fees and charges (including remarketing fees, fiscal agent fees, costs of purchasing interest rate protection (if applicable) and the like) paid pursuant to any borrowing of Lessee (including, without limitation, any payment made pursuant to the Senior Loan and/or any repayment of Development Deficit Advances, Operating Deficit Advances and/or Deferred Developer Fee); (b) management fees, leasing commissions and tenant allowances; (c) property taxes and assessments and sewer and water charges (or escrows or deposits for same paid to any lender of Lessee and/or any agent thereof or reserves for same held by the Lessee); (d) insurance premiums or escrows or deposits for same paid to any lender of Lessee and/or any agent thereof or reserve for same held by the Lessee; (e) additions and deposits to capital reserve, interest reserve and working capital reserve accounts; (f) any expenditure for a capital item not covered by a capital reserve; (g) legal, accounting and audit fees directly related to ownership, leasing, management, maintenance, repair or operation of the Market Rate Rental Improvements directly or indirectly related to preparing reports as may be required by any lender of Lessee and/or the Authority. Operating Expenses will not include (i) any depreciation, amortization, bad debt allowance, or other non-cash item of expense; (ii) except as provided in clause (f) above, any expenditure for any capital item; (iii) any expenditure for repair that is paid out of casualty insurance proceeds or a condemnation award; and (iv) disbursements from the capital reserve account established and funded pursuant to (e) of this section.

4.2.12 "**Operating Receipts**" for a particular period means all rents, fees, and other sums actually paid to the Lessee during such period for occupancy, use or operation of the Market Rate Rental Improvements, including, but not limited to, amounts paid to the Lessee from parking, vending, utility or other concessions in the Market Rate Rental Improvements. Gross Receipts will also include, but not be limited to (but only to the extent actually received by or for the benefit of the Lessee in a particular period for such occupancy, use or operation) any condemnation awards or rental insurance proceeds paid in lieu of rent (but not other casualty proceeds or condemnation awards). Operating Receipts shall not include the proceeds of any loan made to Lessee (including, without limitation, any proceeds realized from the Senior Loan, any Development Deficit Advance and/or any Operating Deficit Advance), the proceeds of any equity contribution made to the Lessee by any member thereof (including, without limitation, the proceeds of any tax credit equity contributions), or security deposits received from any sub-tenant of the Market Rate Rental Improvements until applied by the Lessee.

4.2.13 "**Phase IIB Developer Equity Investment**" means an amount equal to the sum of the Deemed Leasehold Acquisition Fee Payment plus the initial face amount of the Senior Loan Letter of Credit.

4.2.14 "**Sale**" means a sale of the Market Rate Rental Improvements, the Phase IIB Improvements and/or the sale or other transfer (whether in one transaction or in a series of transactions) of more than fifty percent (50%) of the membership interests in Lessee, in each case to a person or entity who is not an Affiliate of Lessee; provided, however, that the Market Rate Transfer shall not be deemed to be a Sale hereunder.

4.2.15 "**Senior Loan Closing Date**" means the date upon which the deed of trust securing the Senior Loan is recorded against the Lessee's interest in the Premises.

4.2.16 "**Senior Loan Letter of Credit**" means the Letter of Credit initially issued on behalf of STRS for the benefit of the Lessee to secure repayment of the Senior Loan, or any replacement or subsequent letter of credit, cash collateral or other instrument securing repayment of the Senior Loan.

4.2.17 "**Senior Loan Letter of Credit Draw Amount**" means the amount, if any, of the Senior Loan Letter of Credit which is drawn upon in connection with the Senior Loan.

4.2.18 Notwithstanding anything to the contrary herein, no portion of the First Sale Profit Payment Rent shall accrue or be payable with respect to the Affordable Housing Parcels and the foregoing provisions Section 4.2.2 through Section 4.2.17 shall be null and void as to the Lessee following the Market Rate Transfer (it being understood that such provisions are to be instead incorporated into the Market Rate Parcel Ground Lease).

4.3 **Timing of Lease Consideration Payments.**

4.3.1 The balance of the Leasehold Acquisition Fee due from Lessee, if any, shall be paid by Lessee at the Commencement of Construction.

4.3.2 First Sale Profit Payment Rent shall be paid by Lessee upon closing of the sale that triggers such First Sale Profit Payment Rent payment pursuant to Section 4.2.2.

4.4 **Payment and Late Fees.** Lease Consideration payments shall be made by check or draft issued and payable to The Los Angeles Grand Avenue Authority, accompanied by a detailed statement showing the basis for its calculation of the amount payable to Authority and mailed or otherwise delivered to the Authority at the address set forth in Section 15.10, or such other address as may be provided to Lessee by Authority. Lessee acknowledges that Authority shall have no obligation to issue statements, invoices or other demands for payment, and that the Lease Consideration payments required herein shall be payable notwithstanding the fact that Lessee has received no such statement, invoice or demand. If any Lease Consideration payment is not received by Authority on the date due, Lessee acknowledges that Authority will experience additional management, administrative and other costs that are impracticable or extremely difficult to determine. Therefore, any First Sale Profit Payment Rent or other amounts owing hereunder which are not paid on the date due shall bear interest from the date when due until paid at a rate per annum equal to the lesser of (i) the Reference Rate plus three percent (3%) per annum or (ii) the highest rate permitted by applicable Laws. Additionally, a fee ("**Late Fee**") of six percent (6%) of the unpaid amount shall be added to any amount unpaid within five (5) days after the date such amount was due. Lessee acknowledges that such Late Fee and interest shall be applicable to all identified monetary deficiencies under this Lease, whether identified by audit or otherwise, and that interest on such amounts shall accrue from and after the date when such amounts were due and payable as provided herein (as opposed to the date when such deficiencies are identified by Authority). If any payment by Lessee to Authority hereunder becomes subject to disgorgement or is subject to any lien in favor of a third party as a result of Lessee's actions or

agreements, then Lessee shall immediately replace any such payment to the extent it is so disgorged and shall immediately remove any lien on such payment so that Authority has the full and unfettered use of such funds.

4.5 **Lessee's Books and Records.** Lessee shall maintain in a safe and orderly manner all of its records necessary to compute and calculate the First Sale Profit Payment Rent payable pursuant to this Article 4 for a period of four (4) years following the completion of the sale that triggers such First Sale Profit Payment Rent payment. Lessee shall maintain such records on a current basis and in sufficient detail to permit adequate review thereof and, at all reasonable times, copies of such records shall be available to the Authority or its representatives for such purposes. The Authority may, by written notice to Lessee within three (3) years after First Sale Profit Payment Rent was paid (or due to be paid) to the Authority, cause an audit to be commenced by a nationally recognized firm of certified public accountants, at the Authority's sole expense (subject to the last sentence of this Section 4.5), to verify if Lessee's calculations of First Sale Profit Payment Rent were accurate. If such audit reveals an underpayment of First Sale Profit Payment Rent, then Lessee shall promptly pay the amount so underpaid to the Authority, together with interest thereon at the Reference Rate plus three percent (3%) calculated from the date such First Sale Profit Payment Rent was first due until the date actually paid. If it is determined that Lessee underpaid First Sale Profit Payment Rent by more than three percent (3%), the Authority shall be entitled to receive from Lessee its actual and reasonable audit expenses incurred in respect to the audit of First Sale Profit Payment Rent.

5. CONSTRUCTION OF IMPROVEMENTS; ALTERATIONS.

5.1 **Construction of the Phase IIB Improvements.** Upon the Possession Delivery Date, Lessee shall commence and proceed diligently to construct the Phase IIB Improvements and all required Offsite Publicly Owned Improvements, in accordance with Sections 5.5, 5.6 and 5.8 below, Articles 4 and 5 of the DDA, and the Scope of Development for Phase IIB that is attached hereto as Schedule 5.1(A) and incorporated herein. Prior to commencement of construction of the Phase IIB Improvements, Authority shall have received and approved a "glare study" for the Phase IIB Improvements conducted by Lessee's architect for the Phase IIB Improvements. Lessee shall begin and complete all construction and development of Phase IIB within the times specified in the Schedule of Performance for Phase IIB that is attached hereto as Schedule 5.1(B) and incorporated herein, or such extension of said dates as may be granted by Authority in its reasonable discretion. Lessee acknowledges that the principal inducement to Authority to enter into this Lease is the timely completion of the Phase IIB Improvements. If Lessee fails to substantially complete construction of the Phase IIB Improvements when required by the DDA, such failure will be an Event of Default and the Authority may exercise any right or remedy available to it under this Lease, the DDA or applicable Laws.

5.2 **Application of Remainder of Article 5**. The remaining Sections of this Article 5 (except for Sections 5.5, 5.6 and 5.8) apply only to the construction of alterations or modifications to the Phase IIB Improvements (after the initial construction thereof pursuant to Section 5.1) that Lessee may be required or desire to make that affect the public areas, the exterior of the Improvements or the Parking Garage, or that cause a change in the Permitted Uses or materially reduce the value of the Improvements (collectively, together with the Subsequent

Renovations described in Section 5.9 below, "**Alterations**"). Sections 5.5, 5.6 and 5.8 apply to both Alterations and the construction of the Phase IIB Improvements pursuant to Section 5.1.

5.3 **Plans and Specifications for Alterations**. Lessee shall make no Alterations without the prior written approval of the Director (except as expressly provided in Section 5.7 below). Prior to and as a condition precedent to the construction of any Alterations, Lessee shall submit to Director, for Director's approval, the plans, specifications and other materials described in this Section 5.3 pertaining to such Alterations. All Alterations must be consistent with the Permitted Uses set forth in Article 3 of this Lease.

5.3.1 Schematics and Narrative. Lessee shall submit to the Director six (6) sets of schematic plans together with a narrative description and construction cost estimate summary clearly delineating the nature, size, configuration and layout of the Alterations. Such plans shall, among other things, clearly delineate the architectural theme or motif of the Alterations and shall identify and illustrate the boundaries of the Premises and all rights-of-way or other areas reserved to Authority or third parties which are located thereon. Director shall have sixty (60) days within which to approve or disapprove such submission. Failure by Director to either approve or disapprove such submission within said sixty (60) day period shall be deemed an approval; provided, however, that no submission shall be deemed approved unless the request for approval contains the following provision, in bold print:

> **NOTICE IS HEREBY GIVEN THAT FAILURE TO APPROVE OR DISAPPROVE THE REQUESTED MATTER WITHIN 60 DAYS SHALL BE DEEMED AN APPROVAL PURSUANT TO SECTION 5.3.1 OF THE PHASE IIB GROUND LEASE.**

After approval of schematic plans (or subsequent approval of preliminary or final plans) by Director, if changes in such plans are required by conditions of approval of the Alterations imposed by another governmental agency having jurisdiction thereover, Lessee shall promptly advise Director in writing of such changes and Director shall not disapprove the changes required by such other governmental agency, as appropriate, unless such changes materially prejudice Authority's ability to enjoy the rights and benefits granted to Authority pursuant to this Lease.

5.3.2 Preliminary Plans and Specifications. After Director's approval of the materials submitted pursuant to Subsection 5.3.1, Lessee shall submit to Director six (6) sets of preliminary plans, outline specifications and construction cost estimates for the Alterations. The preliminary plans, outline specifications and construction cost estimate shall conform to, expand upon and reflect a natural evolution from the descriptions and estimates set forth in the approved schematic plans and narrative. Any material difference in the scope, size, configuration, arrangement or motif of the Alterations from those described in the approved schematics and narrative shall be separately identified and described. Director shall have twenty-one (21) days within which to approve or reasonably disapprove such submission, and Director may disapprove said preliminary plans on the grounds that they do not reflect a natural evolution from the approved schematic plans or that they materially differ from the approved schematic plans and narrative. Failure of Director to approve or disapprove said preliminary plans within twenty

one (21) days after Director's receipt thereof shall be deemed Director's approval thereof; provided, however, that if the preliminary plans, outline specifications and construction cost estimates contain substantial changes from the approved schematics and narrative, then Director shall have sixty (60) days in which to approve said submission, which approval shall be deemed withheld if not granted in writing within such sixty (60) day period; and provided further, that together with the submission of the preliminary plans, outline specifications and construction cost estimates, Lessee must deliver to Director a transmittal letter containing the following text prominently displayed in bold faced type:

> **"PURSUANT TO SECTION 5.3.2 OF THE PHASE IIB GROUND LEASE, IF THESE MATERIALS CONTAIN NO SUBSTANTIAL CHANGES FROM THE MATERIALS PREVIOUSLY SUBMITTED TO YOU, YOU HAVE TWENTY ONE (21) DAYS AFTER RECEIPT OF THESE MATERIALS IN WHICH TO APPROVE OR DISAPPROVE THEM. FAILURE TO DISAPPROVE THESE MATERIALS IN WRITING WITHIN TWENTY ONE (21) DAYS OF YOUR RECEIPT OF THESE MATERIALS SHALL CONSTITUTE YOUR APPROVAL OF THEM."**

5.3.3 Final Plans and Specifications. After Director's approval of the preliminary plans, outline specifications and construction cost estimate, Lessee shall submit for approval by Director six (6) complete sets of final plans, detailed specifications and a construction cost statement for the Alterations, together with one (1) set of appropriate structural computations, identical to those requested or required by the relevant government agency incident to the issuance of building permits. Lessee shall file duplicate copies of the final plans, detailed specifications and construction cost statement required by this Section with the relevant government agency, together with the necessary and appropriate applications for building permits. Any material difference in the scope, size, configuration, arrangement or motif of the Alterations from those described in the approved preliminary plans and specifications shall be separately identified and described. Director shall have twenty one (21) days within which to approve or disapprove such submission, and Director may disapprove such submission on the grounds that they do not reflect a natural evolution from or that they materially differ from the approved preliminary plans, outline specifications and construction cost estimates. Failure of Director to disapprove said materials within twenty one (21) days after Director's receipt shall be deemed Director's approval thereof; provided, however, that in the event that the final plans, detailed construction specifications and construction cost statement contain substantial changes from the preliminary plans, outline specifications and construction cost estimates, then Director shall have sixty (60) days in which to approve said submission, which approval shall be deemed withheld if not granted in writing within such sixty (60) day period; and provided further, that together with the submission of the final plans, detailed construction specifications and construction cost statement, Lessee must deliver to Director a transmittal letter containing the following text prominently displayed in bold faced type:

> **"PURSUANT TO SECTION 5.3.3 OF THE PHASE IIB GROUND LEASE, IF THESE MATERIALS CONTAIN NO SUBSTANTIAL CHANGES FROM THE MATERIALS PREVIOUSLY SUBMITTED TO YOU, YOU HAVE TWENTY ONE (21) DAYS AFTER RECEIPT OF THESE MATERIALS IN WHICH TO APPROVE OR DISAPPROVE THEM.**

FAILURE TO DISAPPROVE THESE MATERIALS IN WRITING WITHIN TWENTY ONE (21) DAYS OF YOUR RECEIPT OF THESE MATERIALS SHALL CONSTITUTE YOUR APPROVAL OF THEM."

Director's approval shall not be unreasonably withheld; provided, however, that it shall be deemed reasonable to disapprove any submission not in substantial conformity with the approved preliminary plans and specifications. No material modification shall be made to the Alterations described in the approved final plans, specifications and costs (the "**Final Plans and Specifications**") without the prior written approval of Director, which shall not be unreasonably withheld.

5.4 **Conditions Precedent to the Commencement of Construction of Alterations**. No construction of Alterations shall be commenced until each and all of the following conditions have been satisfied:

5.4.1 Permits and Other Approvals. Lessee shall, at its own expense, have secured or caused to be secured any and all permits which may be required by the City or any other governmental agency regulating such Alterations.

5.4.2 Copies of Construction Contracts. Lessee shall have furnished Authority with copies of any contract(s) entered into between Lessee and any general contractor(s) employed for the purpose of constructing the Alterations.

5.4.3 Performance and Payment Bonds. At least ten (10) business days prior to the commencement of construction of any Alterations costing in excess of $1,000,000 (which amount shall be increased, but not decreased, on an annual basis beginning on January 1, 2013 and on each subsequent January 1 by the same percentage increase as the increase in the CPI from January 1 of the immediately preceding year), Lessee shall have delivered to Authority copies of labor and material bonds and payment and performance bonds, each in an amount not less than one hundred percent (100%) of the cost set forth in the applicable construction contract for such work and naming Authority and the County as obligees. Said bonds shall be issued by an insurance company licensed to do business in the State of California and named in the current list of "Surety Companies Acceptable on Federal Bonds" as published in the Federal Register of the U.S. Treasury Department. Authority shall consider (but have no obligation to approve) alternate forms of reasonable assurance that the work will be completed in the manner contemplated by this Lease, including a letter of credit.

5.4.4 Completion Guaranty. In lieu of delivery of payment and performance bonds in accordance with Section 5.4.3 above, Lessee shall have the option to deliver to Authority a Completion Guaranty. Authority agrees to approve a guarantor that has been approved by Lessee's construction lender (including Related, if so approved by Lessee's construction lender). Such Completion Guaranty shall be subject to the construction lender's first right to enforce any guaranty of completion of the Alterations, or any portion thereof, in favor of such lender. Authority will retain the right to enforce the Completion Guaranty if the construction lender fails to cause the Alterations to be completed. Authority will defer enforcement of the Completion Guaranty until notice of default is given to Lessee, all cure periods under the loan documents have elapsed, and the construction lender has had an additional

two (2) months to commence enforcement of the completion guaranty in favor of such lender (as such period may be extended by litigation between Lessee and its lender over the enforcement of the completion guaranty). Lessee hereby waives any statute of limitations on enforcement of the Completion Guaranty by Authority.

5.4.5 Evidence of Financing. Lessee shall have provided the Authority with evidence of a commitment from an Institutional Lender to provide construction financing for the total cost of the Alterations (or evidence that Lessee has capital commitments together with such construction financing sufficient to cover the cost of the construction of such Alterations).

5.5 **Manner of Construction**.

5.5.1 General Construction Standards. All construction, alteration, modification or repairs shall be accomplished by Lessee with due diligence. Lessee shall take all reasonable steps to minimize any damage, disruption or inconvenience caused by such work and make adequate provisions for the safety and convenience of all persons affected thereby. Lessee shall repair, at its own cost and expense, any and all damage caused by such work, and shall restore the area upon which such work is performed to a condition which is at least equal to or better than the condition which existed before such work was commenced. Additionally, Lessee shall pay or cause to be paid all costs and expenses associated therewith and shall indemnify, defend and hold Authority harmless from and against all damages, costs, expenses, losses or claims arising out of or in connection with the performance of such work, except to the extent that such damages, costs, expenses, losses or claims are caused by Authority, its employees or agents acting within the scope of their employment or agency relationship. Dust, noise and other effects of such work shall be controlled using accepted measures customarily utilized in order to control deleterious effects associated with construction projects in well populated and developed areas of Southern California.

5.5.2 Utility Work. Any work performed by or on behalf of Lessee or any occupant of the Premises to connect to, repair, relocate, maintain or install any storm drain, sanitary sewer, water line, gas line, telephone conduit, or any other utility service shall be performed in a manner that minimizes interference with the provision of such services to the Premises and other persons.

5.5.3 Construction Safeguards. Lessee shall erect and properly maintain at all times, as required by the conditions and the progress of work performed by or on behalf of Lessee, all necessary safeguards for the protection of workers and the public.

5.5.4 Compliance with Construction Documents and Laws. All Improvements and Alterations on the Premises shall be completed in substantial compliance with any construction documents approved by Authority and also in compliance with all Laws.

5.5.5 Notice to Director; Damage to Public Improvements. Lessee further agrees to keep Director apprised of the progress of the work to the end that Director may timely inspect the Premises to assure proper safeguarding of any public-owned improvements existing on or around the Premises, including but not limited to underground conduits and utility lines. If any such public-owned improvement is damaged in connection with said construction activity,

Lessee agrees to repair such damage immediately at no cost or expense to Authority or, in the event that Lessee fails to effectuate such repair within five (5) business days after written notice from Authority (or such longer period as may be reasonably required to complete such repair so long as Lessee commences such repair within five (5) business days and thereafter diligently prosecutes same to completion), Authority may, subject to the rights of Mortgagees under Article 12 hereof, enter upon the Premises to make such repairs, the Actual Cost of which shall be paid by Lessee within five (5) business days after demand by Authority.

5.5.6 Rights of Access. For the purposes of assuring compliance with this Lease, representatives of the Governing Entities shall have the reasonable right of access to the Premises without charges or fees during normal construction hours during the period of construction for the purpose of ascertaining compliance with this Lease, including but not limited to the inspection of the construction work being performed, provided that such access does not interfere with the construction of the Improvements or the Alterations, as applicable. The representatives of the Governing Entities shall be those who are previously identified to Lessee in writing by the Governing Entities. The applicable Governing Entities shall provide Lessee, prior to the representatives' access of the Premises, with evidence of comprehensive general liability insurance with limits and coverages reasonably acceptable to Lessee or, at the Governing Entities' election, the Governing Entities may self-insure for such risks, and shall indemnify and pay for the defense of Lessee and hold it harmless from any damage caused or liability arising out of such right of access. Such access shall be reasonably calculated to minimize interference with Lessee's construction and/or operations. Lessee shall have the right to have a representative present to accompany the representatives of the Governing Entities in connection with such access. In the event of any emergency which is life-threatening or which involves the threat of potential substantial damage, Authority shall have the right to enter the Premises immediately and without notice to or accompaniment by Lessee.

5.6 **Use of Plans**. If this Lease is terminated prior to the expiration of the Term as provided herein, Lessee's rights to all work product prepared pursuant hereto, including, but not limited to, all plans and construction documents, shall belong to the CRA as the fee owner of the Premises. In the event of any such termination, Lessee shall, within ten (10) days of such termination, transmit all such work product to the Authority for distribution to the CRA.

5.7 **Reserved**.

5.8 **Protection of Authority**. Nothing in this Lease shall be construed as constituting the consent of Authority, express or implied, to the performance of any labor or the furnishing of any materials or any specific Improvements, Alterations or repairs to the Premises or any part thereof by any contractor, subcontractor, laborer or materialman, nor as giving Lessee or any other person any right, power or authority to act as agent of or to contract for, or permit the rendering of, any services, or the furnishing of any materials, in any such manner as would give rise to the filing of mechanics' liens or other claims against the Premises or Authority.

5.8.1 Posting Notices. Authority shall have the right at all reasonable times and places to post and, as appropriate, keep posted, on the Premises any notices which Authority may deem necessary for the protection of Authority, the Premises and the Improvements thereon from mechanics' liens or other claims. With respect to any Alterations costing in excess of $500,000

(which amount shall be increased, but not decreased, on an annual basis beginning on January 1, 2013 and on each subsequent January 1 by the same percentage increase as the increase in the CPI from January 1 of the immediately preceding year), Lessee shall give Authority at least ten (10) business days prior written notice of the commencement of such Alterations, in order to enable Authority timely to post such notices.

5.8.2 Prompt Payment. Lessee shall make, or cause to be made, prompt payment of all monies due and owing to all persons doing any work or furnishing any materials or supplies to Lessee or any of its contractors or subcontractors in connection with the Premises and the Improvements thereon. Lessee shall have the right to contest any such amount; provided, however, the entire expense of any such contest (including interest and penalties which may accrue) shall be the responsibility of Lessee.

5.8.3 Liens; Indemnity. Lessee shall keep the Premises and any Improvements thereon free and clear of all mechanics' liens and other liens arising out of or in connection with work done for Lessee and/or any parties claiming through Lessee. Lessee agrees to and shall indemnify, defend and hold Authority harmless from and against any claim, liability, loss, damages, costs, expenses, attorneys' fees incurred in defending and all other expenses on account of claims of lien(s) of laborers or materialmen or others for work performed or materials or supplies furnished to Lessee or persons claiming under it. In case of any such lien attaching or notice of any lien, Lessee covenants and agrees to cause it to be released and removed of record within ten (10) business days after Lessee receives notice of such lien, except that Lessee shall have the right to contest any such lien so long as Lessee posts a bond removing such lien from title in the amount required by law within such ten (10) business day period.

5.9 **Subsequent Renovations**. Lessee covenants that throughout the Term the Premises and all Improvements thereon shall be maintained as a top quality retail and residential development at least comparable to facilities similar in size and nature to the Premises in the Southern California region (the "**Renovation Standard**").

Prior to the commencement of construction of a material renovation and upgrade of the Improvements (other than the interiors of the Sublessees' spaces in the Retail Improvements) (each, a "**Subsequent Renovation**"), Lessee shall submit to Director, for Director's approval, a renovation plan for such Subsequent Renovation (a "**Subsequent Renovation Plan**"), which renovation plan shall (a) describe the proposed renovation work in detail, (b) include a design, governmental approval and construction schedule for the work described therein, (c) include a budget for all work costs, and (d) address such other matters as Director reasonably requests. The Subsequent Renovation Plan shall be submitted by Lessee to Authority not later than such date as, taking into consideration the approval periods described in this Section 5.9 and Section 5.3 above, and the estimated time required to obtain all necessary governmental approvals and permits, will permit the commencement by Lessee of the applicable Subsequent Renovation by the date required under this Section 5.9. Director shall have sixty (60) days within which to approve or disapprove the Subsequent Renovation Plan. If Director fails to notify Lessee in writing of its approval or disapproval of the Subsequent Renovation Plan, Director shall be deemed to have approved; provided, however, that the Subsequent Renovation Plan shall not be deemed approved unless the request for approval contains the following provision, in bold print:

NOTICE IS HEREBY GIVEN THAT FAILURE TO APPROVE OR DISAPPROVE THE REQUESTED MATTER WITHIN 60 DAYS SHALL BE DEEMED AN APPROVAL PURSUANT TO SECTION 5.9 OF THE PHASE IIB GROUND LEASE.

Upon Director's approval of the Subsequent Renovation Plan, Lessee shall proceed to satisfy all conditions in this Article 5 to the commencement of the Subsequent Renovation and to commence and complete the Subsequent Renovation in accordance with the Subsequent Renovation Plan and the terms and conditions of this Article 5. Lessee's failure to comply with the schedule approved by Director as part of Subsequent Renovation Plan shall, if not cured within the cure period set forth in Section 13.1.2, constitute an Event of Default.

Notwithstanding the foregoing provisions of this Section 5.9, Lessee's obligation to make Subsequent Renovations to comply with the Renovation Standard as set forth in this Section 5.9 shall not be applicable to the storefront, facade and/or signage of any individual Sublessee premises that are subleased by Lessee to a national or regional tenant to the extent that Lessee does not have the authority under the applicable Sublease to make renovations, or to require the Sublessee to make renovations, to such facade, storefront and/or signage to permit Lessee to comply with the requirements of this Section 5.9; provided, however, that Lessee shall use commercially reasonable efforts to arrange for such Sublessees to perform, or permit the performance of, upgrades that would permit Lessee to comply with the requirements of this Section 5.9; and provided, further, that upon the expiration or earlier termination of any such Sublease, Lessee shall be obligated to upgrade or cause to be upgraded such Sublease premises to meet the Renovation Standard.

5.10 **Force Majeure, Enforced Delay, Extension of Time of Performance**. Time is of the essence in this Lease. Performance by any party hereunder shall not be deemed to be in default where delays or defaults are due to war; insurrection; strikes; lock-outs; riots; floods; earthquakes; fires; casualties; acts of God; acts of the public enemy; epidemics; quarantine restrictions; freight embargoes; lack of transportation; governmental restrictions or priority; litigation; unusually severe weather; inability to secure necessary labor, materials or tools; acts of another party; acts or the failure to act of any public or governmental agency or entity (except that acts or the failure to act of Authority shall not excuse performance by Authority) or any other causes beyond the reasonable control or without the fault of the party claiming an extension of time to perform ("**Force Majeure**"). An extension of time for Force Majeure shall only be for the period of the enforced delay, which period shall commence to run from the time of the commencement of the cause. The party requesting an extension of time under this Section shall give notice promptly following knowledge of the delay to the other party. If, however, notice by the party claiming such extension is sent to the other party more than thirty (30) days after knowledge of the commencement of the delay, the period shall commence to run upon the earlier of (i) thirty (30) days prior to the giving of such notice or (ii) the date that the other party received knowledge of the events giving rise to the delay. For purposes of this Section 5.10, a cause shall be beyond the control of the party whose performance would otherwise be due only if and to the extent such cause would prevent or hinder the performance of an obligation by any reasonable person similarly situated and shall not apply to causes peculiar to the party claiming the benefit of this Section (such as a failure to order materials in a timely fashion).

5.11 **Notice of Completion of Alterations.** Upon completion of any Alterations, Lessee shall file or cause to be filed in the Official Records of the County of Los Angeles a Notice of Completion (the "**Notice of Completion**") with respect to the Alterations and Lessee shall deliver to Authority, at no cost to Authority, two (2) sets of conoflex or mylar final as-built plans and specifications of the Alterations. Section 507 of the DDA shall govern with respect to the issuance of a Certificate of Completion for the Phase IIB Improvements to be constructed pursuant to the DDA.

6. CONDEMNATION.

6.1 Definitions.

6.1.1 Condemnation. "**Condemnation**" means (1) the exercise by any governmental entity of the power of eminent domain, whether by legal proceedings or otherwise, and (2) a voluntary sale or transfer to any Condemnor (as hereafter defined), either under threat of Condemnation or while legal proceedings for Condemnation are pending.

6.1.2 Date of Taking. "**Date of Taking**" means the date the Condemnor has the right to possession of the Premises being condemned.

6.1.3 Award. "**Award**" means all compensation, sums or anything of value awarded, paid or received from a total or partial Condemnation.

6.1.4 Condemnor. "**Condemnor**" means any public or quasi-public authority, or private corporation or individual, having the power of eminent domain.

6.1.5 Total Taking. "**Total Taking**" means a permanent Condemnation of all of the Premises.

6.1.6 Partial Taking. "**Partial Taking**" means a permanent Condemnation of less than all of the Premises.

6.1.7 Temporary Taking. "**Temporary Taking**" means a Condemnation for a period of time less than the entire remaining Term of this Lease.

6.2 **Parties' Rights and Obligations to be Governed by Lease**. If, during the Term of this Lease, there is any taking of all or any part of the Premises, any Improvements on the Premises or any interest in this Lease by Condemnation, the rights and obligations of the parties shall be determined pursuant to the provisions of this Article 6.

6.3 **Total Taking**. If a Total Taking occurs, this Lease shall terminate on the Date of Taking.

6.4 **Effect of Partial Taking**. If a Partial Taking occurs, this Lease shall remain in effect, except that Lessee may elect, subject to Section 12.5, to terminate this Lease if Improvements constituting more than twenty-five percent (25%) of the replacement cost of all of the Improvements on the Premises are the subject of such Partial Taking, or if such Partial

Taking results in Lessee's loss of access to the Improvements so that Lessee has no effective use thereof. Lessee must exercise its right to terminate by giving Authority written notice of its election within ninety (90) days after the nature and extent of the taking and the probable amount of compensation have been determined. Such notice shall also specify the date of termination, which shall not be prior to the Date of Taking. Failure to properly exercise the election provided for in this Section 6.4 will result in this Lease's continuing in full force and effect.

If Lessee does not elect to terminate this Lease as provided above, then Lessee, whether or not the Award or payments, if any, on account of such taking shall be sufficient for the purpose, shall, at its sole cost and expense, within a reasonable period of time, commence and complete restoration of the remainder of the Premises as nearly as possible to its value, condition and character immediately prior to such taking, taking into account, however, any necessary reduction in size or other change resulting from the taking; provided, however, that in case of a Temporary Taking, Lessee shall not be required to effect restoration until such taking is terminated. Lessee shall furnish to Authority evidence satisfactory to Authority of the total cost of the restoration required by this Section 6.4.

6.5 **Effect of Partial Taking on Lease Consideration**. If a Partial Taking occurs and this Lease remains in full force and effect as to the portion of the Premises that is not the subject of the Partial Taking, the Lease Consideration payable under this Lease shall not be reduced and all other obligations of Lessee under this Lease, including but not limited to the obligation to pay First Sale Profit Payment Rent, shall remain in full force and effect.

6.6 **Waiver of Code of Civil Procedure Section 1265.130**. Each party waives the provisions of Code of Civil Procedure Section 1265.130 allowing either party to petition the Superior Court to terminate this Lease in the event of a Partial Taking or Temporary Taking.

6.7 **Payment of Award**. Awards and other payments, less costs, fees and expenses incurred in the collection thereof ("**Net Awards and Payments**") on account of a Condemnation shall be applied as follows:

6.7.1 Partial Taking Without Termination. Subject to the right of any Mortgagee (in order of priority) to hold and disburse Net Awards and Payments under its respective Mortgage, Net Awards and Payments received on account of a Partial Taking which does not result in termination hereof shall be held by Authority and shall be paid out to Lessee or Lessee's designee(s), in progress payments, for the cost of restoration of the Premises. Subject to the rights of any Mortgagee (in order of priority) to reduce the balance of the indebtedness secured by its Mortgage, the balance, if any, following the restoration of the Premises, shall be divided between Authority and Lessee pro rata, as nearly as practicable, based upon (1) the then value of Authority's interest in the Premises (including its interest hereunder) and (2) the then value of Lessee's interest in the remainder of the Term of this Lease including bonus value. Any determinations of fair market value made pursuant to this Section 6.7 shall be predicated upon the "income approach" or "income capitalization approach" to property valuation, as defined in The Dictionary of Real Estate Appraisal and/or The Appraisal of Real Estate, published by the Appraisal Institute or any successor organization (the "**Income Approach**").

6.7.2 Temporary Taking. Net Awards and Payments received on account of a Temporary Taking shall be paid to Lessee; provided, however, that if any portion of any such award or payment is paid by the Condemnor by reason of any damage to or destruction of the Improvements, such portion shall be held by Authority and shall be paid out to Lessee or Lessee's designee(s), in progress payments, for the cost of restoration of the Premises.

6.7.3 Total Taking and Partial Taking with Termination. Net Awards and Payments received on account of a Total Taking or a Partial Taking which results in the termination of this Lease shall be allocated in the following order:

First: There shall be paid to each Mortgagee (in order of priority), if any, an amount equal to the sum of any unpaid principal amount of its respective Mortgage secured by the Premises plus costs, expenses, and other sums due pursuant the loan documents, if any, and any interest accrued thereon, all as of the date on which such payment is made.

Second: There shall be paid to Authority an amount equal to the present value of the portion of the Premises (with the Improvements thereon) subject to the taking from and after the expiration of the Term.

Third: There shall be paid to Lessee an amount equal to the value of Lessee's interest in the remainder of the Term of this Lease, including the value of the ownership interest in and use of the Improvements constructed on the Premises, determined as of the date of such taking, less payments made under paragraph Second above. For such purposes, the Term of this Lease shall not be deemed to have terminated even if Lessee so elects under Section 6.4.

Fourth: The balance shall be paid to Authority.

6.7.4 Disputes. Any dispute under this Article 6 concerning the fair market value of the Premises or any portion thereof, computation of present value or the determination of the amount of First Sale Profit Payment Rent or other sums which would have become due over the Term of this Lease which are not resolved by the parties, shall be submitted to arbitration pursuant to Article 16 of this Lease. Such valuations, computations and determinations of value shall be made utilizing the Income Approach.

6.7.5 Payments to Mortgagee. Notwithstanding anything to the contrary set forth in this Article 6, all compensation awarded upon a Condemnation or taking to which Lessee may be entitled hereunder shall be paid to each Mortgagee (if any, in order of priority) to be distributed in accordance with the terms of its respective Mortgage; provided, however, that if Lessee satisfies all conditions for the release of the Premises from the lien of a Mortgage, then the applicable Mortgagee shall be paid only the amount of such compensation awarded which equals the amount such Mortgagee would have received if, at such time, the Premises were released pursuant to the terms of its Mortgage.

6.8 **Waiver of Right to Condemn**. Authority and the CRA each hereby waives for and on behalf of itself, for the benefit of Lessee, any right that it may have to commence or complete any Condemnation with respect to the Premises during the Term of this Lease.

7. CERTAIN COVENANTS OF LESSEE.

7.1 **Net Worth.**

7.1.1 Minimum Net Worth. Lessee shall maintain, at all times prior to completion of the Phase IIB Improvements, a minimum net worth equal to twenty percent (20%) of the total projected development cost of Phase IIB. Lessee has confirmed to the Authority that the total projected development cost of Phase IIB is expected to be approximately $120,000,000 (including the Leasehold Acquisition Fee for Phase IIB); therefore, the minimum net worth of Lessee for Phase IIB is $24,000,000 ("**Minimum Net Worth**"). Such net worth includes the Leasehold Acquisition Fee for Phase IIB payable by Lessee pursuant to Section 4.2.1. Lessee's failure to maintain the Minimum Net Worth shall constitute an Event of Default hereunder.

7.1.2 Evidence of Minimum Net Worth. Lessee must establish to the reasonable satisfaction of the Authority that Lessee meets the Minimum Net Worth requirements set forth in Section 7.1.1 on at least an annual basis, including through the delivery of certified financial statements, copies of the notes and guaranties used for the capitalization and other similar information on each anniversary of the Commencement Date.

7.1.3 Completion Guaranty. Notwithstanding Sections 7.1.1 and 7.1.2 above, if Related provides a Completion Guaranty in favor of Authority with respect to the completion of Phase IIB, as required by and meeting the requirements set forth in Section 417 of the DDA, the Minimum Net Worth requirements set forth in Section 7.1.1 shall be deemed to be satisfied with respect to Lessee so long as such Completion Guaranty remains in effect and enforceable against Related.

7.2 **Condominium Conversions**.

Without limiting the effect of Section 17.7, without the prior consent of the Authority, no individual units in the Phase IIB Improvements shall be transferred or sold as individual condominium units during the Term of this Lease.

8. **INDEMNITY**.

Lessee shall at all times defend, indemnify, protect, and save harmless the Authority, the CRA, the City, the County, and their respective commissioners, council members, board members, officers, beneficiaries, employees, agents, attorneys, representatives, legal successors and assigns (collectively, "**Authority Indemnified Parties**") and all persons acting under, through, or on behalf of them, from any and all claims, costs, losses, expenses or liability, including attorneys' fees and costs of litigation, for the death of or injury to persons or damage to property, including property owned or controlled by or in the possession of Authority Indemnified Parties, to the extent that such arises from or is caused by (a) the construction, alteration, improvement, operation, management, maintenance, use, or occupancy of the Premises by Lessee or its agents, officers, employees, licensees, concessionaires, permittees or Sublessees, (b) the acts, omissions, or negligence of Lessee, its agents, officers, employees, licensees, concessionaires, permittees or Sublessees in connection with this Lease or the Premises, or (c) the failure of Lessee, its agents, officers, employees, licensees, concessionaires, permittees or Sublessees to observe and abide by any of the terms or conditions of this Lease or

any applicable law, ordinance, rule, or regulation pertaining to this Lease or the Premises; provided, however, that the terms of the foregoing indemnity shall not apply to the gross negligence or willful misconduct of the Authority Indemnified Parties. Lessee shall pay immediately upon demand of the Authority Indemnified Parties any amounts owing under this indemnity. The duty of Lessee to indemnify includes the duty to defend the Authority Indemnified Parties or, at the Authority Indemnified Parties' choosing when said defense is not being provided by a commercial carrier of insurance, to pay the Authority Indemnified Parties' costs of their defense in any court action, administrative action, or other proceeding brought by any third party arising from this Lease or the Premises. The obligation of Lessee to so defend, indemnify, protect, and save harmless Authority Indemnified Parties shall continue during any periods of occupancy or of holding over by Lessee, its agents, officers, employees, licensees, concessionaires, permittees or Sublessees, beyond the expiration of the Term or other termination of this Lease.

Lessee shall include a provision comparable to the preceding paragraph in each Sublease (excluding Subleases for individual residential units) so that each Sublessee agrees to defend, indemnify, protect, and save harmless the Authority Indemnified Parties as provided herein.

9. **INSURANCE**.

Without limiting Lessee's indemnification of the Authority Indemnified Parties set forth in Article 8, Lessee shall maintain or cause to be maintained, and keep in full force and effect, the following insurance coverages. Such insurance relates to Lessee's performance and operations and shall be primary to and not contributing with any insurance or self-insurance programs maintained by any of the Governing Entities, and such coverages shall be provided and maintained at Lessee's own expense.

9.1 **Policy Requirements**.

9.1.1 Commercial General Liability Insurance. A policy of commercial general liability insurance (written on ISO policy form CG 00 01 or its equivalent) with limits of not less than the following:

General Aggregate:	$25,000,000
Products/Completed Operations Aggregate:	$25,000,000
Personal and Advertising Injury:	$1,000,000
Each Occurrence:	$5,000,000

Such policy shall protect the Governing Entities as additional insureds against incurring any legal cost in defending claims for alleged loss subject to all the terms and conditions of the commercial general liability policy. Excess insurance that complies with the general insurance requirements set forth in Section 9.2 below may be used to provide the required coverage limits.

9.1.2 Automobile Liability Insurance. Lessee shall require contractors and other parties working on the Premises to have commercial automobile liability insurance written on ISO policy form CA 00 01 or its equivalent, with a limit of liability of not less than Two Million

Dollars ($2,000,000) per accident, including coverage for any owned, hired or non-owned automobiles, or coverage for "any auto." If and when valet parking services are provided at the Premises, Lessee shall also require Garagekeeper's Legal Liability coverage of the valet or parking operating services company (written on ISO form CA 99 37 or its equivalent) with limits of not less than Three Million Dollars ($3,000,000). Lessee's excess liability insurance policies shall also apply to commercial automobile liability.

9.1.3 Worker's Compensation and Employer's Liability Insurance. Worker's compensation insurance with limits and statutory limits not less than those required by the Labor Code of the State of California and federal statute, if applicable, and covering all persons employed by Lessee and Lessee's contractors in the conduct of its operations on the Premises (including the "all states" and volunteers endorsements, if applicable), including Employer's Liability insurance coverage including illness, injury and disease in limits not less than One Million Dollars ($1,000,000).

9.1.4 Liquor Liability Insurance. If and when the distribution, sale or service of alcoholic beverages occurs on the Premises by a sublessee of the Retail Improvements, Lessee shall provide Liquor Liability insurance (written on ISO policy form CG 00 33 or 34 or their equivalent) with a liability limit of not less than Five Million Dollars ($5,000,000) per occurrence and an annual aggregate of Ten Million Dollars ($10,000,000). If written on a "claims made" form, the coverage shall also provide an extended two (2) year reporting period commencing upon the expiration or earlier termination of this Lease.

9.1.5 Commercial Property Insurance. A policy of insurance to cover damage to the Project including improvements and betterments, from perils covered by the Causes-of-Loss Special Form (ISO form CP 1030) or its equivalent, including flood (flood shall have a sub-limit of $20,000,000), earthquake (with coverage levels based on probable maximum loss analysis as set forth in a seismic analysis prepared by a licensed engineer and if coverage is available at reasonable rates as agreed to by Lessee and the Governing Entities), and ordinance or law Coverage (ordinance or law shall have a sub-limit of $5,000,000) written for the full replacement value of the Project including any and all Improvements, with a deductible no greater than $250,000 (adjusted by CPI) or 5% of the property values whichever is less (except for earthquake deductible which shall not exceed 5% of the insured unit value). Such policy of insurance shall also include boiler and machinery coverages, and business interruption coverage, including loss of rents equal to eighteen (18) months of rent. Insurance proceeds will be payable to the Lessee, Authority, CRA, City and County as their interests may appear and will be utilized for repair and restoration of the Project. During the construction of the Phase IIB Improvements, the obligation to provide insurance coverages under this Section 9.1.5 shall not be applicable so long as the insurance coverage described in Subsection 9.1.6(1) below is carried.

9.1.6 Insurance During Construction. During the construction of the Phase IIB Improvements and the construction of any Alterations, Lessee shall maintain or cause to be maintained, and keep in full force and effect, the following insurance coverages:

(1) Builder's Risk Course of Construction. Such coverage shall: (a) insure against damage from perils covered by the Causes-of-Loss Special Form (ISO form CP 1030) or its equivalent, and be endorsed to include earthquake, flood (flood shall have a sub-

limit of $20,000,000), ordinance or law coverage (ordinance or law shall have a sub-limit of $5,000,000), coverage for temporary offsite storage, debris removal, pollutant cleanup (pollutant cleanup shall have a sub-limit of $100,000) and removal, preservation of property, excavation costs, landscaping, shrubs and plants, full collapse coverage during construction (without restricting collapse coverage to specified perils). Such insurance shall (i) be extended to include boiler and machinery coverage for air conditioning, heating and other equipment during testing, covering the entire value of materials and equipment in transit, and (ii) be written on a completed-value basis (except the earthquake coverage (which shall be based on probable maximum loss analysis as set forth in a seismic analysis prepared by a licensed engineer and if coverage is available at reasonable rates)) and cover the entire value of the construction project, including materials and equipment, against loss or damage until completion and acceptance of the construction by the Authority.

(2) General Liability Insurance. Such coverage shall be written on ISO policy form CG 00 01 or its equivalent with limits of not less than Twenty-Five Million Dollars ($25,000,000) per occurrence, Fifty Million Dollars ($50,000,000) policy aggregate and Fifty Million Dollars ($50,000,000) products/completed operations aggregate. The products/completed operations coverage shall continue to be maintained in the amount indicated above for at least ten (10) years after the issuance of a Certificate of Completion for the Phase IIB Improvements or the Alterations, as applicable. Such insurance shall be an occurrence based policy with no "On Going Operations Endorsement" and "Close of Escrow Coverage Forms." Excess insurance that complies with the general insurance requirements set forth in Section 9.2 below may be used to provide the required coverage limits.

(3) Errors and Omissions. Lessee shall cause all architects, engineers and other design professionals providing services in connection with the Improvements to carry Professional Liability Insurance covering errors, omissions, negligent or wrongful acts. The limits of coverage required shall be (a) Five Million Dollars ($5,000,000) with respect to the prime architect and engineer for the Improvements, and (b) One Million Dollars ($1,000,000) with respect to each other architect, engineers, surveyor or other licensed professional rendering services in connection with design or construction on the Premises. The coverage shall also provide an extended two (2) year reporting period commencing upon issuance of a Certificate of Completion for the Phase IIB Improvements (with respect to Alterations, the two (2) year reporting period shall commence upon termination or cancellation of the errors and omissions coverage).

(4) Worker's Compensation and Employer's Liability Insurance. Such coverage shall provide workers compensation benefits, as required by the Labor Code of the State of California. Such policy shall be endorsed to waive subrogation against the Governing Entities for injury to Lessee, contractors' and subcontractors' employees. In all cases, such insurance shall include Employer's Liability insurance coverage including illness, injury and disease in limits not less than One Million Dollars ($1,000,000).

(5) Asbestos Liability or Contractors Pollution Liability Insurance. If construction requires remediation of asbestos or pollutants, and if such insurance is available, such insurance shall cover liability for personal injury and property damage arising from the release, discharge, escape, dispersal or emission of asbestos or pollutants, whether gradual or

sudden, and include coverage for costs and expenses associated with voluntary clean-up, testing, monitoring and treatment of asbestos or pollutant(s) in compliance with governmental mandate or order. If the asbestos or pollutant will be removed from the Premises, asbestos or pollutant liability shall also be required under the contractor's or subcontractor's Automobile Liability Insurance. Coverage limits shall be as reasonably required and mutually agreed upon by Lessee and the Authority or its designated representative.

(6) Automobile Liability Insurance. Lessee shall require contractors and other parties working on the Project to have commercial automobile liability insurance written on ISO policy form CA 00 01 or its equivalent, with a limit of liability of not less than Five Million Dollars ($5,000,000) per accident, including coverage for any owned, hired or non-owned automobiles, or coverage for "any auto." Lessee's excess liability insurance policies shall also apply to commercial automobile liability.

9.1.7 Modifications to Coverages. The Authority reserves the right throughout the Term of this Lease, to require reasonable changes to the limits and types of insurance coverage required hereunder based on accepted risk management principles by giving Lessee ninety (90) days prior written notice of such change, provided such requirements are commercially available and are what is customarily maintained by comparable developers of comparable projects.

9.2 **General Insurance Requirements**.

9.2.1 Insurance Companies. Insurance required to be maintained pursuant to this Article 9 shall be written by companies authorized to do business in California and having a "General Policyholders Rating" of at least A:VIII (or such higher rating as may be required by a Mortgagee) as set forth in the most current issue of "Best's Key Rating Guide."

9.2.2 Certificates of Insurance. Lessee shall monitor the insurance of Lessee's contractors and design professionals and maintain proof of such insurance during construction. Lessee shall deliver to Authority certificates of insurance with original additional insured endorsements as indicated in Section 9.2.3 below, for all coverages required by this Article 9. The certificates and endorsements of each insurance policy shall be on forms reasonably acceptable to Authority and signed by a person authorized by the insurer to bind coverage on its behalf and provided prior to commencing any activities on the Premises.

9.2.3 Additional Insureds. All policies of insurance required hereunder (other than worker's compensation insurance and professional liability insurance) shall name Authority, the CRA, the City, and the County as additional insureds as their respective interests may appear. The policy required under Section 9.1.1 above shall provide for severability of interest.

9.2.4 Excess Coverage. Any umbrella liability policy or excess liability policy shall be in "following form" and shall contain a provision to the effect that, if the underlying aggregate is exhausted, the excess coverage will drop down as primary insurance.

9.2.5 Notification of Incidents. Lessee shall promptly notify Authority of the occurrence of any accidents or incidents in connection with the Premises that could give rise to a

claim under any of the insurance policies required under this Article 9. Lessee shall notify its insurer of the occurrence of any accidents or incidents in connection with the Premises within the time periods required under each insurance contract and shall provide a copy thereof to Authority upon request by Authority.

9.2.6 Full Insurable Value. The term "**full insurable value**" shall mean the actual replacement cost (without deduction for depreciation) of the Improvements immediately before such casualty or other loss, including the cost of construction of the Improvements, architectural and engineering fees, and inspection and supervision. Lessee shall make available upon request, to Authority, for its review and approval all documents, data and resources used in determining the full insurable value.

9.2.7 No Cancellation. All policies of insurance shall not be subject to cancellation, reduction in coverage, or nonrenewal except after notice in writing by Lessee shall have been sent to Authority not less than thirty (30) days prior to the effective date of cancellation, nonrenewal, amendment or reduction in coverages (except in the case of cancellation for nonpayment of premium in which case cancellation shall not take effect until at least ten (10) days' written notice has been given to each additional insured).

9.2.8 Premiums. Lessee agrees to pay all premiums timely for all insurance required by this Article 9 and, at its sole cost and expense, to comply and secure compliance with all insurance requirements necessary for the maintenance of such insurance.

9.2.9 Blanket Policies. The insurance described in this Article 9 may be carried under a blanket policy or policies covering other liabilities and locations of Lessee, in form, amount and content reasonably satisfactory to the Authority, provided such coverage provides the same protection as if the insurance had been procured on an individual location basis.

9.2.10 Waiver of Subrogation. Lessee agrees to release the Authority Indemnified Parties and waive its rights of recovery against the Authority Indemnified Parties under the insurance policies specified in this Lease. Lessee shall ensure that each policy of property insurance includes a waiver of subrogation against the Authority Indemnified Parties.

9.2.11 Notice. Lessee shall send all required insurance information to Authority at the address set forth in Section 15.10 with a copy to the CRA at 1200 W. 7th Street, Los Angeles, California 90017 (Attention: Risk Manager) and to the County at 500 W. Temple Street, Room 713, Los Angeles, California 90012 (Attention: Chief Administrative Officer).

9.2.12 Self-Insured Retentions (SIR) or Deductibles. Lessee shall identify any SIR or deductibles that exceed $25,000. Authority retains the right to require Lessee to provide a bond or other security to guarantee payment of all such retained losses and cost attributable to Lessee's SIR or deductible.

9.3 **Disbursement of Proceeds**. Upon the occurrence of any loss, the property insurance proceeds shall be held by Authority in trust for the named insureds as their interests appear, and shall be disbursed by Authority on a monthly basis to pay for work completed in accordance with then-prevailing industry custom and practice. In the event of such loss Lessee shall be obligated to rebuild or replace the destroyed or damaged buildings, structures,

equipment, and Improvements, in accordance with the procedures set forth hereinabove for the initial construction, except as otherwise provided in Article 10 hereof. Any surplus or proceeds after said rebuilding or replacement shall be distributed to Lessee. Notwithstanding anything to the contrary set forth in this Section 9.3, the Authority acknowledges that the first-priority leasehold Mortgagee that is an Institutional Lender may request the right to hold the insurance proceeds in trust and disburse such proceeds pursuant to the terms of its Mortgage, and the Authority agrees not to unreasonably withhold its consent to such a request, if such Mortgagee, in the reasonable judgment of the Authority, has the necessary qualifications and experience to competently serve in such capacity. The Authority hereby approves Citibank, N.A. as a Mortgagee satisfying the conditions set forth in the foregoing sentence.

9.4 **Failure to Maintain Coverage**. Failure of Lessee to procure, maintain or renew the herein required insurance shall, if not cured within ten (10) business days after written notice from Authority, constitute a default hereunder. In the event of such failure, in addition to the other rights and remedies provided hereunder, Authority may, at its discretion, procure or renew such insurance and pay any and all premiums in connection therewith. Authority shall be entitled to reimbursement for all actual costs incurred by the Authority in the procurement or renewal of such insurance, with interest thereon at the Applicable Rate, within five (5) business days after written demand by Authority.

10. MAINTENANCE AND REPAIR; DAMAGE AND DESTRUCTION.

10.1 **Lessee's Maintenance and Repair Obligations**. Lessee shall maintain the Premises, including paved or unpaved ground surfaces, plazas, walkways, pedestrian and vehicular access areas, and Improvements thereon, and the Offsite Publicly Owned Improvements, in conformance with such reasonable rules and regulations regarding the use and occupancy of commercial projects in downtown Los Angeles (such as the Premises) as may be promulgated by Authority and/or County and/or CRA and/or City from time to time for general applicability on a non-discriminatory basis, as revised from time to time. Without limiting the foregoing, at Lessee's sole cost and expense, but subject to the terms and conditions of this Lease, Lessee shall keep and maintain, or cause to be kept and maintained, the Premises and all equipment, Improvements or physical structures of any kind which may exist or be erected, installed or made on the Premises and the Offsite Publicly Owned Improvements in good and substantial repair and condition, including without limitation capital improvements and structural and roof repairs and replacements, and shall make all necessary repairs and alterations and replacements thereto, except as otherwise provided in this Article 10. Lessee shall undertake such repairs, alterations or replacements in compliance with applicable Laws, and in compliance with the provisions of Article 5, to the extent applicable. Lessee shall maintain all Improvements on the Premises and the Offsite Publicly Owned Improvements in a safe, clean, wholesome and sanitary condition, to the reasonable satisfaction of Director and in compliance with all applicable Laws. Lessee shall, at its own cost and expense, install, maintain and replace landscaping between the streets abutting the Premises and the building footprints on the Premises as is reasonably necessary to create a pleasing development to the reasonable satisfaction of Director. Lessee specifically agrees to provide proper containers for trash and garbage which are screened from public view, to keep the Premises free and clear of rubbish and litter. Authority in its proprietary capacity shall have the right to enter upon and inspect the Premises at any

reasonable time for cleanliness, safety and compliance with this Section 10.1, as long as such entrance is not done in a manner which would unreasonably interfere with the operation of the Premises. CRA hereby grants to Lessee the ongoing right to access the Offsite Publicly Owned Improvements, subsequent to their completion, for the limited purpose of fulfilling Lessee's maintenance and repair obligations hereunder. Lessee's obligation to maintain and restore is absolute, and is not in any way dependent upon the existence or availability of insurance proceeds, except as otherwise provided in this Article 10. Restoration shall take place in accordance with the provisions of Article 5.

10.2 **Maintenance Deficiencies**. If Authority provides written notice to Lessee of a deficiency or other breach in the performance by Lessee of the maintenance and repair obligations of Lessee under Section 10.1 above, then Lessee shall promptly commence the cure thereof and shall complete such cure within the time period for such cure set forth in the Authority's deficiency notice, which cure period shall not be less than thirty (30) days except if the deficiency pertains to a condition that is a threat to health or safety or otherwise constitutes an emergency situation, in which case Authority shall have the right to immediately require Lessee to take all appropriate steps to avoid damage or injury. If Lessee fails to cure any such deficiency within the cure period set forth in Authority's deficiency notice (which cure period shall comply with the requirements of the immediately preceding sentence of this Section 10.2), then in addition to, and not in lieu of, any rights or remedies that Authority may have under Article 13 of this Lease for defaults not cured within the applicable notice and cure periods set forth therein, Lessee shall pay to Authority an amount equal to Five Hundred Dollars ($500.00) per day per item of deficiency for each day after such cure period that the deficiency item remains uncured; provided, however, if the nature of the deficiency is such that it is not capable of cure within the cure period specified in Authority's notice (for example, as a result of permitting requirements or construction material procurement delays beyond the control of Lessee), then as long as during the specified cure period Lessee commences the cure of the deficiency and thereafter continues the prosecution of the completion of such cure in a manner and with such diligence that will effectuate the cure in as short a period as reasonably possible, then the cure period specified in Authority's deficiency notice shall be extended for such additional time as necessary to complete the cure in as short a period as reasonably possible.

For purposes of determining the number of items of deficiency set forth in a deficiency notice received from the Authority, Authority shall reasonably identify the separate deficiencies so as not to unfairly increase the daily amount payable under this Section 10.2 by separating the work into unreasonably particularized items (e.g., the requirement to paint the exterior of a building shall not be split into individual deficiency items for the painting of each individual door, window or other component of such building). If a cited deficiency is not health or safety related and does not otherwise constitute an emergency, and if in the reasonable and good faith business judgment of Lessee the deficiency notice was erroneously issued by Authority, then Lessee shall have the right to contest such deficiency notice by written notice to Director within five (5) business days after the date the deficiency notice is received by Lessee. If Lessee files any such contest with Director, then Director shall have the right, in the exercise of Director's discretion, to consider such contest. If Lessee's contest is made on a reasonable and good faith basis, then the cure period for the deficiency notice shall be tolled during the period between the date Director receives written notice of such contest and continuing until Director notifies Lessee in

writing that either Director denies Lessee's contest or that Director has determined not to consider such contest. The Five Hundred Dollars ($500.00) per diem amount set forth in this Section 10.2 shall be adjusted every three (3) years during the remaining Lease Term on each third (3rd) anniversary of the Commencement Date to reflect any change in the CPI over the three (3) year period immediately preceding each such adjustment.

10.3 **Option to Terminate Under Certain Circumstances**. In the event of any damage to or destruction of the Premises, or any Improvements located thereon, Lessee shall, except as otherwise expressly provided in this Section 10.3, promptly (taking into consideration the necessity of obtaining approvals and permits for such reconstruction) repair and/or restore such Improvements to their condition existing prior to the damage or destruction. Except as otherwise expressly provided in this Section 10.3, such obligation to repair and restore is absolute, and is in no way dependent upon the existence or availability of insurance proceeds. Repair and restoration of any damage or destruction shall take place in accordance with the provisions of Article 5.

Notwithstanding the foregoing, provided that Lessee complies with all of the provisions of Subsections 10.3.1 through 10.3.4 below, Lessee shall have the option, subject to Section 12.5, to terminate this Lease and be relieved of the obligation to restore the Improvements on the Premises if (i) all or substantially all of the Improvements on the Premises are substantially damaged or destroyed and such damage or destruction resulted from a cause not insured against by Lessee and not required to be insured against by Lessee under this Lease (an "**Uninsured Loss**"), or (ii) during the last five (5) years of the Term the Improvements on the Premises are damaged or destroyed and the cost of repair and restoration exceeds twenty-five percent (25%) of the total replacement cost of all of the Improvements on the Premises immediately prior to the damage or destruction. The following shall be conditions precedent to Lessee's right to terminate this Lease and be relieved of the obligation to restore the Improvements on the Premises pursuant to this paragraph:

10.3.1 No more than one hundred (100) days following the date of the damage or destruction Lessee shall notify Authority of its election to terminate this Lease; to be effective, this notice must include both a copy of Lessee's notification to each Mortgagee and Investor, if any, of Lessee's intention to exercise this option to terminate and Lessee's certification under penalty of perjury that Lessee has delivered or mailed such notification to the Mortgagee and Investor in accordance with this Subsection 10.3.1. Authority shall be entitled to rely upon the foregoing notice and certification as conclusive evidence that Lessee has notified the Mortgagee and Investor regarding Lessee's desire to terminate this Lease.

10.3.2 Subject to the rights of any Mortgagee (in order of priority) under its Mortgage, upon a termination in accordance with Subsection 10.3.1, Lessee shall assign to Authority and Authority shall be entitled to retain all insurance proceeds payable in connection with the event of damage or destruction, and, if requested by Authority Lessee shall, no more than sixty (60) days following the giving of the notice required by Subsection 10.3.1 or such longer time as may be reasonable under the circumstances, remove all debris and other rubble from the Premises; secure the Premises against trespassers, and, at Authority's election, remove all remaining Improvements from the Premises so that the Premises are surrendered to Authority in the condition required under this Lease on the expiration or earlier termination thereof. If

Authority shall require Lessee to demolish and remove from the Premises the remaining Improvements, Authority shall make available to Lessee any insurance proceeds received from Lessee's insurance necessary to pay for the cost of such demolition and removal, but no shortfall in the amount of such insurance proceeds shall relieve Lessee of its obligations under this Subsection 10.3.2. Notwithstanding anything to the contrary set forth in this Subsection 10.3.2, the Authority acknowledges that the first-priority leasehold Mortgagee that is an Institutional Lender may request the right to hold the insurance proceeds in trust and disburse such proceeds pursuant to the terms of its Mortgage, and the Authority agrees not to unreasonably withhold its consent to such a request, if such Mortgagee, in the reasonable judgment of the Authority, has the necessary qualifications and experience to competently serve as in such capacity.

10.3.3 If within ten (10) days following Authority's receipt of the notice referred to in Subsection 10.3.1, Authority has not received a written notice from the Mortgagee or the Investor, if any, objecting to the termination of this Lease or an agreement containing an effective assignment of Lessee's interest in this Lease to such Mortgagee whereby such Mortgagee expressly assumes and agrees to be bound by and perform all of Lessee's obligations under this Lease, Lessee shall deliver to Authority a quitclaim deed to the Phase IIB Improvements in recordable form, in form and content satisfactory to Authority and/or with such other documentation as may be reasonably requested by Authority or any title company on behalf of Authority, terminating Lessee's interest in the Premises and reconveying such interest to Authority free and clear of any and all Mortgages and Subleases.

10.4 **No Option to Terminate for Other Casualty**. Except as expressly provided in Section 10.3 above, Lessee shall have no option to terminate this Lease or otherwise be relieved of its obligation to restore the Improvements on the Premises in the case of any damage to or destruction of the Premises or the Improvements located thereon.

10.5 **No Authority Obligation to Make Repairs**. Authority shall have no obligation whatsoever to make any repairs or perform any maintenance on the Premises.

10.6 **Repairs Not Performed by Lessee**. If Lessee fails to make any repairs or replacements as required, Director may notify Lessee of said failure in writing, and should Lessee fail to cure said failure and make repairs or replacements within a reasonable time as established by Director, Authority may make such repairs or replacements and the cost thereof, including, but not limited to, the cost of labor, overhead, materials and equipment, shall be charged against Lessee as provided in Section 13.5.

10.7 **Other Repairs**. Although having no obligation to do so, Authority may, at its own cost and at its sole discretion, perform or permit others to perform any necessary filling, grading or repair of utility systems, sewer facilities, roads, or other public facilities on or about the Premises.

10.8 **Notice of Damage**. Lessee shall give prompt notice to Authority of any fire or damage affecting the Premises from any cause whatsoever.

10.9 **Waiver of Civil Code Sections**. The parties' rights shall be governed by this Lease in the event of damage or destruction. The parties hereby waive the provisions of

California Civil Code Section 1932 and any other provisions of law which provide for contrary or additional rights.

10.10 **No Refund of Leasehold Acquisition Fee**. Lessee shall not be entitled to any refund of any portion of the Leasehold Acquisition Fee under any circumstances, regardless of any termination of this Lease.

11. TRANSFERS.

11.1 Transfer Restrictions and Procedures.

11.1.1 Rationale. Lessee represents that it is entering into this Lease for the purposes of the redevelopment of the Premises in accordance with the DDA and not for speculation in land holding. Lessee further recognizes that, in view of the importance of the redevelopment of the Premises to the general welfare of the community, the qualifications and identity of Lessee, and its respective principals and personnel, are of particular concern to Authority. Therefore, no voluntary or involuntary successor-in-interest of Lessee shall acquire any rights or powers under this Lease or in the Premises except as specifically set forth herein.

11.1.2 Prohibition on Transfers.

(1) Prior to the issuance of a Certificate of Completion for the Phase IIB Improvements and except as specifically permitted herein, Lessee shall not cause or permit any sale, transfer, conveyance, assignment, lease, sublease, hypothecation, mortgage or pledge (each of the foregoing being referred to in this Lease as a "**Transfer**") of the Improvements or of the Premises or Phase IIB Improvements or any interest therein, or of any interest in this Lease, or of any ownership interest in Lessee relating to Phase IIB, without the prior written consent of Authority, which consent may be granted or withheld in Authority's sole discretion. After the issuance of a Certificate of Completion for the Phase IIB Improvements and except as specifically permitted herein, any Transfer of this Lease or of the Premises or the Phase IIB Improvements, or any interest therein, shall be subject to the requirements of Section 11.3. Lessee acknowledges that the consent to a Transfer by Authority shall be subject to Authority obtaining the prior consent to such Transfer by the County and the CRA.

(2) The term "Transfer" shall include (i) with respect to a partnership or limited liability company, the withdrawal or change, voluntary, involuntary or by operation of law, of twenty-five percent (25%) or more of the partners or members, or transfer of twenty-five percent or more of partnership or membership interests, within a twelve (12)-month period, or the dissolution of the partnership or limited liability company without immediate reconstitution thereof, and (ii) with respect to a closely held corporation (i.e., whose stock is not publicly held and not traded through an exchange or over the counter), (A) the dissolution, merger, consolidation or other reorganization of such corporation or, (B) the sale or other transfer of more than an aggregate of twenty-five percent (25%) of the voting shares of the corporation (including to immediate family members by reason of gift or death) within a twelve (12)-month period, or (C) the sale, mortgage, hypothecation or pledge of more than an aggregate of twenty-five percent (25%) of the value of the unencumbered assets of the corporation within a twelve

(12)-month period. The term "Transfer" shall also include a change in Control (as defined in Section 1.2 above) of the subject entity.

11.1.3 Permitted Transfers.

Notwithstanding Section 11.1.2, the following Transfers shall be permitted (both before and after issuance of a Certificate of Completion) without Authority's consent on the terms and conditions hereafter set forth:

(1) Space Leases in the Ordinary Course of Business. The leasing of space within the Premises to Sublessees in the ordinary course of business, including, but not limited to, leases of individual residential units and lease of the Retail Improvements. Long term ground leases or other leases or contracts which in effect serve to Transfer to the transferee Lessee's economic interest in the Premises or a substantial portion thereof shall not be deemed to be "in the ordinary course of business"; and

(2) Transfer Pursuant to Purchase Option. The Transfer of Lessee's interest in the Premises pursuant to the terms of a purchase option or right of first refusal executed in connection with the admission of the Investor to Lessee pursuant to which (a) Investor's interest in Lessee is transferred to an Affiliate of Lessee or (b) Lessee's rights under the Lease and fee title ownership interest in the Phase IIB Improvements are transferred to an entity controlled by Related California Urban Housing, LLC; provided, however, that notwithstanding the first sentence of this Section 11.1.3, any Transfer pursuant to the foregoing clause (b) shall be subject to the satisfaction of each of the conditions set forth in Sections 11.3.2(3) and 11.3.2(4).

(3) Permanent or Construction Loans from Institutional Lenders. The granting of a Mortgage to an Institutional Lender to secure construction or permanent financing for Phase IIB and any refinancing loan which refinances a permitted financing, and the exercise of remedies under such Mortgage as permitted under this Lease. All other Mortgages shall be subject to approval in accordance with Section 12.1.

(4) Pledge of Managing Member Interests. The pledge of Related/Parcel M's interest in Lessee to **[Citibank, N.A. and/or STRS]** pursuant to that certain **[Pledge Agreements to be expressly identified]** and exercise of the pledgee's rights under such pledge agreements.

(5) Foreclosure Transfers. Foreclosure Transfers for which Authority's consent is not required pursuant to Section 12.2.2.

If Authority consents to a Transfer, (i) the terms and conditions of this Lease shall in no way be deemed to have been waived or modified and (ii) such consent shall not be deemed consent to any further Transfer by either Lessee or a transferee. Except as specifically provided herein, without the specific written agreement of Authority, no Transfer permitted hereunder or approved by Authority shall operate to release or excuse Lessee from any obligations or liability under or in connection with this Lease or any other Project Document.

11.1.4 Transfer Procedures.

At least sixty (60) days prior to any proposed Transfer pursuant to this Article 11, Lessee shall furnish Authority with (i) a written notice of such proposed Transfer, (ii) such evidence as Authority may request in its commercially reasonable discretion demonstrating that the proposed Transfer and transferee satisfy the criteria set forth herein applicable to such Transfer and transferee (including certified financial statements and other information concerning the proposed transferee or joint venture partner and, in the case of a Transfer to a qualified joint venture, a copy of the proposed joint venture agreement, provided that truly confidential information in such joint venture agreement that is not required by the Authority or the CRA in order to make an informed decision about such transferee may be redacted), and (iii) a copy of a proposed assignment or transfer document reasonably satisfactory to Authority pursuant to which the transferee assumes, for the benefit of Authority, the obligations of Lessee arising from and after the date of Transfer applicable to the interest transferred, including the obligations of Lessee under this Lease and the Project Documents. Authority's approval over any such Transfer shall verify that the proposed Transfer and transferee satisfy the applicable requirements set forth herein and its approval of the proposed assignment and assumption instrument to be entered into by the transferee. No Transfer by Lessee shall release Lessee from its obligations under the Phase IIB REA with respect to those portions of the Premises being transferred to the extent such obligations arose prior to the date of such Transfer. Whether or not the Authority consents to any proposed Transfer, Lessee shall pay the Authority's review and processing fees, as well as any reasonable legal fees incurred by the Authority, within thirty (30) days after written request by the Authority.

11.2 **Transfers of Interests in Lessee; Replacement of Related Key Personnel.**

11.2.1 Lessee's Operating Agreement. Lessee acknowledges that Authority has relied on the Lessee's Amended and Restated Operating Agreement dated **[**_____, 2012**]** ("**Lessee's Operating Agreement**") and on the management structure of Lessee previously provided to Authority by Lessee, in entering into this Lease. Lessee represents and warrants that at all times during the Term Related/Parcel M shall be the sole managing member of Lessee (except as hereinafter provided in this Section 11.2), and, except as permitted by Section 11.1.3, that Investor shall be the only other member of Lessee. Throughout the Term (until Lessee's interest under this Lease has been assigned as provided for herein), Lessee's Operating Agreement shall provide, unless consented to in writing by Authority (which consent may be withheld in Authority's sole discretion) that: (i) Investor's consent is required to any proposed Transfer by Related/Parcel M of its interest in Lessee other than Transfers to Affiliates of Related or STRS, (ii) any direct or indirect Transfer of Related/Parcel M's interest in Lessee that is approved by Authority under Section 11.1.4 will also require Authority's prior approval of a replacement developer and replacement of the Related Key Personnel, in Authority's sole discretion (subject to the provisions discussed below governing the removal of Related/Parcel M as the Lessee Managing Member under certain specified limited circumstances), (iii) the prohibition on Transfers of interests in Lessee shall not restrict transfers or pledges of interests in Investor, (iv) Related/Parcel M shall be the Lessee Managing Member at all times, except as permitted below, with day to day control over the development and construction of the Improvements, (v) certain material decisions or actions as specified in Lessee's Operating Agreement (each, a "**Major Decision**"), are subject to the joint approval of Investor and Related/Parcel M (such Major Decisions include sale or refinancing of the Phase IIB Improvements, modifications or termination of this Lease or the DDA or any amendments

thereto, and similar material matters), (vi) the Related Key Personnel will continue to be the executives in charge of Phase IIB for Lessee with a substantial financial interest in the Phase IIB Improvements, unless and until the Authority approves a change in any such Related Key Personnel in its sole discretion or as otherwise provided herein, and (vii) the Related Key Personnel must devote significant time and commitment to Phase IIB. Notwithstanding anything to the contrary herein, a Transfer of Investor's direct or indirect membership interest in Lessee shall not require Authority's consent provided that in each instance: (A) such transfer does not affect the timing and amount of the capital contributions provided for in and subject to the terms of the Lessee's Operating Agreement as approved by the Authority; (B) such transfer is to either (i) an entity Controlled (as such term is defined in Section 1.2) by the Investor or under common Control with the original partners of Investor retains a managing membership interest or general partner interest in the successor Investor, or (ii) Investor or under common Control with the original partners of Investor retains a managing membership interest or general partner interest in the successor Investor or (ii) a national bank, banking corporation, banking association or other banking institution, or an insurance company subject to supervision by the insurance commissioner or similar regulatory agency, or an investment company registered under the Investment Company Act of 1940, or a publicly-held corporation rated by Standard & Poor's or Moody's Investor Service, Inc., or any subsidiary or syndicator of the foregoing; and (C) following such transfer the Investor or such successor remains liable for all unpaid capital contributions to the Lessee.

11.2.2 Removal of Related/Parcel M as Lessee Managing Member. It is of critical importance to Authority that Related/Parcel M be in control of the development of the Phase IIB Improvements until the issuance of a Certificate of Completion with respect to thereto. However, the Authority recognizes that under certain circumstances it may be necessary for Investor to remove Related/Parcel M as the Lessee Managing Member and/or to terminate Related/Parcel M's membership interest in Lessee prior to the issuance of a Certificate of Completion for the Phase IIB Improvements. The only events that will permit such removal of Related/Parcel M as Lessee Managing Member or as a member of Lessee prior to the issuance of a Certificate of Completion for the Phase IIB Improvements, without the consent of Authority, are:

(1) Gross negligence, fraud, willful misconduct or a material misrepresentation by Related/Parcel M in respect of Lessee's Operating Agreement or Phase IIB;

(2) Any of the Related Key Personnel is indicted for a crime that constitutes a felony, unless such individual is immediately removed any direct or indirect ownership interest in or control of Related/Parcel M and from any responsibilities in respect of Phase IIB and the DDA, and such individual is replaced with a person acceptable to the Authority within thirty (30) days after such indictment;

(3) A Bankruptcy/Dissolution Event occurs as to Related/Parcel M;

(4) A default by Related/Parcel M under the Lessee Operating Agreement which permits the Investor to remove Related/Parcel M as the managing member pursuant to the terms of the Lessee Operating Agreement; or

(5) The occurrence of any breach or default by or of Lessee under any Mortgage (or any other loan documents governing, evidencing or securing the loan that is secured pursuant to any such Mortgage, this Lease or the DDA), subject to applicable notice and cure periods, as the result of any act or omission of Related/Parcel M or its direct or indirect constituents or their employees (but only if Lessee has provided Related/Parcel M with the resources and authority necessary to avoid such breach or default), which breach or default may, with the giving of notice or passage of time, provide the Mortgagee with the right to accelerate the loan secured by the Mortgage or commence foreclosure proceedings involving any of Lessee's assets or terminate the DDA with respect to Phase IIB or this Lease.

If Related/Parcel M is removed as the Lessee Managing Member for any of the foregoing reasons, (i) the Investor shall promptly present to Authority a proposed substitute developer to replace Related/Parcel M as the Lessee Managing Member, and (ii) pending the approval of such substitute developer by Authority, the Investor will have the temporary authority to take steps on behalf of Lessee to continue, protect and preserve Phase IIB. Such substitute developer must have at least ten (10) years of experience in the development and operation of projects similar in scope and scale to the Project (or, after the completion of the Market Rate Transfer, the Affordable Housing Rental Improvements) and affordable housing projects, a net worth of at least $200,000,000, and have no record of material litigation involving the Authority, County, City, or the CRA (a "**Qualified Phase IIB Developer**"). If the Investor presents a Qualified Phase IIB Developer to Authority, Authority will determine, within thirty (30) days after such submission, if such proposed developer is acceptable to Authority, such consent not to be unreasonably conditioned, withheld, or delayed. If Authority disapproves a proposed developer, the Investor will use its commercially reasonable efforts to find and present to Authority other Qualified Phase IIB Developers until Authority approves a Qualified Phase IIB Developer. Authority shall have the right to disapprove, in its sole discretion, any substitute developer that has less than five years of experience managing affordable housing projects and at the time of such transfer manages projects containing, in the aggregate, less than one hundred affordable housing units. Until Authority approves a Qualified Phase IIB Developer, the Investor may continue Phase IIB in accordance with the terms this Lease, and the removal of Related/Parcel M will not constitute a default hereunder, so long as Lessee is not in default of any other terms or provisions of this Lease.

All of the rights and obligations set forth in Section 12.5 with respect to Mortgagees shall apply to, and inure to the benefit of, the Investor as if the Investor were a Mortgagee for purposes thereof. Without limiting the generality of the foregoing, copies of all notices provided to the Mortgagee shall also be provided to the Investor and the Investor shall have the same rights to cure a default by the Lessee hereunder as are provided to the Mortgagee. Authority hereby agrees that any cure of any default hereunder made or tendered by the Investor shall be accepted or rejected by Authority on the same terms as if made by or tendered by the Lessee.

The provisions of this Article 11 relating to the Investor are personal as to the Investor and may not be exercised by any successor thereto without the approval of Authority.

11.3 **Subdivision; Transfers After Completion**.

11.3.1 Subdivision; Market Rate Transfer.

(1) At such time during construction of the Phase IIB Improvements that Lessee desires to cause the Recordation of the Map, Lessee shall deliver an execution copy of the Map and the Phase IIB REA to the Authority for execution. The Authority shall execute and return the Map and the Phase IIB REA to the Lessee within fifteen (15) business days of receipt thereof. Upon receipt of the executed Map and Phase IIB REA Lessee shall be authorized to cause the Recordation of the Map and the Phase IIB REA against the CRA's fee interest in the Premises, the Authority's leasehold interest in the Premises and Lessee's sub-leasehold interest in the Premises, and effect the Subdivision which will result in the creation of the Affordable Housing Parcels and the Market Rate Parcels and concurrent recordation of the Phase IIB REA. In connection with the foregoing, Authority shall execute and deliver to Lessee for Recordation, within fifteen (15) business days of receipt of written request therefor, any documents reasonably necessary, in the opinion of the Title Company, to cause the subordination of this Lease to the Map and the Phase IIB REA.

(2) Following the Recordation of the Map and the Phase IIB REA, the following shall occur concurrently: Lessee shall convey Lessee's fee interest in the Market Rate Rental Improvements to the Market Rate Parcel Owner, Authority shall, subject to the conditions contained in Section 11.3.1(3) below, enter into the Market Rate Parcel Ground Lease with the Market Rate Parcel Owner, the CRA-Authority Market Rate Lease NDA, and the definition of Premises hereunder shall be revised to apply only to the only to the Affordable Housing Parcels, as such parcels are more specifically described on Exhibit "F" hereto and the First Amendment to CRA-Authority Lease NDA shall be executed and recorded (collectively, the "**Market Rate Transfer**"). No less than thirty (30) days before Lessee desires to cause the execution of the Market Rate Parcel Ground Lease, Lessee shall deliver the documents required pursuant to Section 11.3.1(3) and a written request to the Authority to execute and deliver the Market Rate Parcel Ground Lease, the CRA-Authority Market Rate Lease NDA and the First Amendment to CRA-Authority Lease NDA to the Authority. Provided that such documents are in substantially the same form as the forms attached to the DDA Third Amendment and this Lease, as applicable, the Authority shall execute and deliver to Lessee, within fifteen (15) business days of receipt thereof, the Market Rate Parcel Ground Lease, the CRA-Authority Market Rate Lease NDA and the First Amendment to CRA-Authority Lease NDA; Lessee acknowledges that if any such document differs materially from the form attached to the DDA Third Amendment or this Lease, as applicable, as reasonably determined by the Authority, such fifteen (15) business day time period shall be automatically extended by the amount of time reasonably necessary for the Authority to obtain any necessary approvals of such documents. Upon receipt of the executed Market Rate Parcel Ground Lease and the CRA-Authority Market Rate Lease NDA, the Lessee shall be authorized to cause the Recordation of a memorandum of Ground Lease in connection with execution of the Market Rate Parcel Ground Lease and the CRA-Authority Market Rate Lease NDA. The Authority hereby consents to the conveyance of Lessee's fee title interest in the Market Rate Rental Improvements to the Market Rate Parcel Owner in accordance with this Section 11.3.2.

(3) As a condition precedent to the Authority's execution and delivery of the Market Rate Parcel Ground Lease, concurrent with delivery of Lessee's written request to the Authority to execute the Market Rate Parcel Ground Lease, the CRA-Authority Market Rate

Lease NDA, and the First Amendment to CRA-Authority Lease NDA, Lessee shall furnish to Authority (i) an ALTA survey certified in favor of Authority showing the Affordable Housing Parcels and the Market Rate Parcels (including all improvements in place), if available, and a legal description of such parcels, together with a title insurance commitment from the Title Company committing to insure title to the ground sub-leasehold in the Market Rate Parcels in the name of the Market Rate Parcel Owner, including a Subdivision Map Act endorsement; (ii) an estoppel certificate from Lessee confirming that to Lessee's knowledge there is no Lessee default under this Lease or the DDA; and (iii) a release by Lessee of any suits, claims or obligations of Authority and the CRA under this Lease or under the DDA with respect to the Market Rate Parcels and the Market Rate Rental Improvements. As a further condition precedent to the Authority's execution and delivery of the Map and the Market Rate Parcel Ground Lease, the CRA, Lessee, Phase IIA Developer (as defined in the DDA), CRA/LA and the Authority shall have entered into the Public Plaza REA (as defined in the DDA) and that certain Parking Agreement and Covenant by and among the Phase IIA Developer, the Phase IIB Developer and the Phase IIB Market Rate Owner.

(4) Lessee shall pay all costs and expenses incurred by Authority in executing and delivering the Map, the Phase IIB REA, the Market Rate Parcel Ground Lease, the CRA-Authority Market Rate Lease NDA and the First Amendment to CRA-Authority Lease NDA. Lessee shall be responsible for the payment of all costs and expenses incurred due to necessary modifications to the title insurance policies for this Lease and for the CRA-Authority Lease in connection with the recordation of the Map, the memorandum of Market Rate Parcel Ground Lease, CRA-Authority Market Rate Lease NDA and the First Amendment to CRA-Authority Lease NDA.

(5) The Authority acknowledges and agrees that from and after execution of the Market Rate Parcel Ground Lease, (a) this Lease and the Affordable Housing Rental Improvements, and the Market Rate Parcel Ground Lease and Market Rate Rental Improvements shall thereafter be bifurcated and there shall be no cross-defaults between this Lease and the Market Rate Parcel Ground Lease, and (b) Lessee will be released from its obligations under this Lease accruing thereafter solely with respect to the Market Rate Parcels and the Market Rate Rental Improvements (including, without limitation, the obligation to pay First Sale Profit Payment Rent) and the Market Rate Parcels will no longer be a part of the Premises under this Lease; provided, however, that Lessee shall remain obligated for all other obligations under this Lease and the DDA, to the extent any obligations of Lessee remain under the terms of the DDA.

11.3.2 Other Transfers After Completion.

(1) Following completion of the Subdivision and the Market Rate Transfer pursuant to Section 11.3.1, the Authority will, subject to the satisfaction of the conditions set forth in this Section 11.3.2, at Lessee's request, consent to (i) an assignment of this Lease to a successor-in-interest to Lessee that is a Qualified Owner, or (ii) a transfer of ownership interests in Lessee provided that Lessee will remain a Qualified Owner subsequent to the completion of such Transfer.

(2) A party shall be a "**Qualified Owner**" only if such party (X) has adequate capitalization and liquidity to perform its duties under this Lease, including, without limitation, maintaining and operating the Premises in the first class manner required by this Lease; (Y) has (or at all times retains a management entity that has or whose principals have individually) at least ten (10) years of experience in owning and operating similar first class improvements in a high-rise, mixed use environment in an urban core area in a major city in the United States and has an office in Los Angeles; and (Z) has a good reputation in the real estate community.

(3) As a condition precedent to any consent by the Authority pursuant to Section 11.3.2(1), at least sixty (60) days prior to the proposed effective date of the Transfer, Lessee shall furnish to Authority (i) such evidence as Authority may request, in its commercially reasonable discretion, demonstrating that the proposed assignee is (or that Lessee will remain, as applicable) a Qualified Owner (including certified financial statements of and other information concerning the proposed assignee or Lessee, as applicable); (ii) an estoppel certificate from Lessee confirming that to Lessee's knowledge there is no default under this Lease or the DDA, (iv) a release by Lessee of any suits, claims or obligations of Authority or CRA under this Lease or under the DDA with respect to the Premises, (v) a certificate from the proposed assignee or Lessee, as the case may be, in favor of Authority setting forth the basis on which the proposed assignee is (or Lessee will remain, as applicable) a Qualified Owner; (vi) if applicable, an executed assignment of the Phase IIB REA in favor of the proposed assignee and an executed assignment of the Public Plaza REA (as defined in the DDA) in favor of the proposed assignee; (vii) if applicable, evidence of release of the Premises from the lien of the Mortgage, or if the Premises is not released from the lien of the Mortgage in connection with such Transfer, a written consent from the Institutional Lender holding the Mortgage consenting to the Transfer of the Premises to the assignment of this Lease and confirming that Lessee is not in default of its obligations under the loan secured by the Mortgage. In addition to the foregoing, the payment in full of all unpaid interest accrued on the Affordable Housing Loan as of the date of Transfer shall be a condition precedent to any Transfer of the Affordable Housing Rental Improvements; provided, however, the Affordable Housing Loan shall be assumable in accordance with the terms of the documents evidencing and governing such Affordable Housing Loan.

(4) Lessee shall pay all costs and expenses incurred by Authority in reviewing, documenting and negotiating any documentation in connection with an assignment of this Lease or transfer of ownership interests in Lessee, as well as any and all other out-of-pocket costs and expenses, including reasonable attorneys' fees, incurred by Authority in connection with the same. Lessee shall be responsible for the payment of all costs and expenses incurred due to necessary modifications to the title insurance policies for this Lease and for the CRA-Authority Lease. Upon consent to an assignment of this Lease to a Qualified Owner, Lessee will be released from its obligations under this Lease arising after the effective date of such assignment, but Lessee shall remain obligated for all other obligations under the DDA for which Lessee was obligated as of the date of the assignment.

11.4 **Common Area Agreement.**

Lessee's right to cause Authority to enter into the Market Rate Parcel Ground Lease pursuant to Section 11.3.1 is also conditioned upon Lessee's execution and recordation of

the Phase IIB REA in substantially the form attached hereto as Exhibit "G". The Phase IIB REA must obligate the Market Rate Parcel Owner to repair, maintain and operate the common areas of Phase IIB, and to collect assessments from Lessee for its respective share of the costs incurred in connection therewith, including costs of insurance and taxes on such common areas. Without limiting the generality of the foregoing, the Market Rate Owner shall be responsible at all times for the maintenance and repair in a first class manner of the common areas and all exterior surfaces and public areas in and about Phase IIB, including building curtain walls, walkways, sidewalks, exterior lighting, benches, planters, utilities, signs, artwork, plazas, the Parking Garage, public lobbies in buildings, parking ramps and driveways, stairways, escalators and elevators serving the Parking Garage or public areas, landscaping, and all other improvements and areas in Phase IIB affecting the value and utility of the Improvements to the public, and the coordination between all elements of the Improvements, regardless of any default by Lessee under this Lease.

The Authority shall be a party to the Phase IIB REA and shall be entitled, but not obligated, to enforce Lessee's and Market Rate Parcel Owner's rights thereunder, including, without limitation, Market Rate Parcel Owner's right under the Phase IIB REA to assess and collect such amounts from the Lessee if Market Rate Owner fails to do so, but such enforcement right shall not limit the rights of Authority under the Phase IIB REA to proceed against the Market Rate Owner to enforce its obligations.

12. **MORTGAGES**.

12.1 **Authority Approval Required.**

All Mortgages other than first priority Mortgages to an Institutional Lender to secure construction or permanent financing for Phase IIB (and any refinancing thereof) shall be subject to the approval of the Authority in accordance with this Section 12.1. Lessee shall provide the Authority with copies of proposed loan documents for construction loans and permanent loans at least fifteen (15) days prior to Lessee's desired loan closing date. Authority shall have the right to approve any loan from a non-Institutional Lender or that is secured by a Mortgage that is not a first priority lien on the Premises, such approval not to be unreasonably withheld, provided that such approval shall be limited to (i) confirming that the total loan to value ratio does not exceed eighty-five percent (85%) (including debt secured by pledges of equity interests in Lessee), (ii) reasonably approving any rights of the lender to seek to replace Lessee or replace Related/Parcel M as the Lessee Managing Member, and (iii) approving any rights and obligations Authority may have under such loan documents. Lessee shall pay the Authority's review and processing fees, as well as any reasonable legal fees incurred by the Authority with respect to review of such loan documents, within thirty (30) days after written request by Authority. Notwithstanding anything to the contrary contained herein, the Authority hereby approves the 7.7 Million Dollar Loan, the Affordable Housing Loan (as such terms are defined in the DDA), and the Letter of Credit and all Mortgages executed in connection therewith (including, but not limited to, the deed of trust delivered by Lessee to Urban Funding, Inc. in connection with the 7.7 Million Dollar Loan, and the deed of trust delivered by Lessee to STRS in connection with the Letter of Credit).

12.2 **Foreclosure Transfers**.

12.2.1 Definitions. As used herein, a "**Foreclosure Transfer**" shall mean any transfer of the entire leasehold estate under this Lease or of all of the ownership interests in Lessee pursuant to any judicial or nonjudicial foreclosure or other enforcement of remedies under or with respect to a Mortgage, or by voluntary deed or other transfer in lieu thereof. A "**Foreclosure Transferee**" shall mean any transferee (including without limitation a Mortgagee) which acquires title to the entire leasehold estate under this Lease or to all of the ownership interests in Lessee pursuant to a Foreclosure Transfer.

12.2.2 Foreclosure Transfer. The consent of Authority shall not be required with respect to any Foreclosure Transfer.

12.2.3 Subsequent Transfer By Mortgagee. For each Foreclosure Transfer in which the Foreclosure Transferee is a Mortgagee (or its designee), with respect to a single subsequent transfer of this Lease or the ownership interests in Lessee (as applicable) by such Mortgagee to any third party, (i) Authority's consent to such transfer shall be required, but shall not be unreasonably withheld or delayed, and the scope of such consent (notwithstanding anything in this Lease to the contrary) shall be limited to Authority's confirmation (which must be reasonable) that the Lessee following such transfer has sufficient experience and has, or is under the control of a person or entity that has, sufficient financial capability to perform its remaining obligations under this Lease as they come due, along with any obligation of Lessee for which the Foreclosure Transferee from whom its receives such transfer is released under Section 12.3.1 below, and (ii) such transferee (other than a transferee of ownership interests) shall expressly agree in writing to assume and to perform all of the obligations under this Lease, other than Excluded Defaults (as defined below). For clarification purposes, the right to a single transfer under this Section shall apply to each Foreclosure Transfer in which the Foreclosure Transferee is a Mortgagee, so that there may be more than one "single transfer" under this Section.

12.3 **Effect of Foreclosure**. In the event of a Foreclosure Transfer, the Mortgagee shall forthwith give notice to Authority in writing of such transfer setting forth the name and address of the Foreclosure Transferee and the effective date of such transfer, together with a copy of the document by which such transfer was made.

12.3.1 An Institutional Lender, shall, upon becoming a Foreclosure Transferee (other than a transferee of ownership interests in Lessee), become liable to perform the full obligations of Lessee under this Lease (other than Excluded Defaults as defined below) accruing during its period of ownership of the leasehold; provided, however, that such Institutional Lender's liability hereunder shall be limited to its interest in the Improvements, the Premises and this Lease. Upon a subsequent transfer of the leasehold in accordance with Section 12.2.3 above, such Institutional Lender shall be automatically released of any further liability with respect to this Lease, other than for (i) First Sale Profit Payment Rent payments, property tax payments, reserve account payments and other monetary obligations under specific terms of this Lease that accrue solely during such Institutional Lender's period of ownership of the leasehold, and (ii) Lessee's indemnification obligations under this Lease with respect to matters pertaining to or arising during such Institutional Lender's period of ownership of leasehold title.

12.3.2 Any other Foreclosure Transferee (i.e., other than an Institutional Lender as provided in Section 12.3.1 above) shall, upon becoming a Foreclosure Transferee (other than a transferee of the ownership interests in Lessee), become liable to perform the full obligations of Lessee under this Lease (other than Excluded Defaults).

12.3.3 Following any Foreclosure Transfer which is a transfer of the leasehold interest under this Lease, Authority shall recognize the Foreclosure Transferee as the Lessee under this Lease and shall not disturb its use and enjoyment of the Premises, and the Foreclosure Transferee shall succeed to all rights of Lessee under this Lease as a direct lease between Authority and such Foreclosure Transferee, provided that the Foreclosure Transferee cures any pre-existing Event of Default other than any such pre-existing Event of Default that (i) is a pre-existing incurable non-monetary default, (ii) is a non-monetary default that can only be cured by a prior lessee, or (iii) is otherwise personal to and only curable by a prior lessee, including without limitation any breach of Section 7.1 or any other net worth requirement contained herein (collectively, "**Excluded Defaults**"), and thereafter performs the full obligations of Lessee under this Lease. Pursuant to Section 12.3.6 below, following any Foreclosure Transfer which is a transfer of ownership interests in Lessee, the foregoing rights under this Section 12.3.3 shall also inure to the benefit of the Lessee.

12.3.4 No Mortgagee shall become liable to Authority for any of Lessee's obligations under this Lease unless and until such Mortgagee becomes a Foreclosure Transferee with respect to Lessee's leasehold interest under this Lease.

12.3.5 No Foreclosure Transfer, and no single subsequent transfer by a Mortgagee following a Foreclosure Transfer pursuant to Section 12.2.3, shall trigger (i) any acceleration of any financial obligation of Lessee under this Lease, (ii) any recapture right on the part of Authority, or (iii) any termination right under this Lease. For clarification purposes, the "single subsequent transfer" referred to in the foregoing sentence applies to each Foreclosure Transfer in which the Foreclosure Transferee is a Mortgagee (as more fully explained in Section 12.2.3), so that there may be more than one "single subsequent transfer" benefited by this Section.

12.3.6 Following a Foreclosure Transfer with respect to all of the ownership interests in Lessee, (i) any and all rights, privileges and/or liability limitations afforded to Foreclosure Transferees in this Article 12 or any other provision of this Lease shall also be afforded to Lessee from and after such Foreclosure Transfer, to the same extent as if the Foreclosure Transferee had acquired the leasehold interest of Lessee directly and became the Lessee under this Lease, and (ii) any and all rights, privileges and/or liability limitations afforded to Foreclosure Transferees who are Mortgagees in this Article 12 or any other provision of this Lease shall also be afforded to Lessee from and after such Foreclosure Transfer, to the same extent as if the Foreclosure Transferee had acquired the leasehold interest of Lessee directly and became the Lessee under this Lease.

12.4 **No Subordination**. Authority's rights in the Premises and this Lease, including without limitation Authority's right to receive First Sale Profit Payment Rent, shall not be subordinated to the rights of any Mortgagee. Notwithstanding the foregoing, a Mortgagee shall have all of the rights set forth in the security instrument creating the Mortgage, to the extent that

such rights are not inconsistent with the terms of this Lease, including the right to commence an action against Lessee for the appointment of a receiver and to obtain possession of the Premises under and in accordance with the terms of said Mortgage, provided that all obligations of Lessee hereunder shall be kept current, including but not limited to the curing of all defaults or Events of Default hereunder (other than Excluded Defaults or as otherwise provided herein).

12.5 **Mortgagee Protections**. Provided that any Mortgagee provides Authority with a conformed copy of each Mortgage that contains the name and address of such Mortgagee, Authority hereby covenants and agrees to faithfully perform and comply with the following provisions with respect to such Mortgage:

(1) No Termination. No action by Lessee or Authority to cancel, surrender, or materially modify the terms of this Lease or the provisions of this Article 12 shall be binding upon a Mortgagee without its prior written consent unless the Mortgagee shall have failed to cure a default within the time frames set forth in this Article 12.

(2) Notices. If Authority shall give any Notice of Default to Lessee hereunder, Authority shall simultaneously give a copy of such Notice of Default to the Mortgagee at the address theretofore designated by it. No Notice of Default given by Authority to Lessee shall be binding upon or affect said Mortgagee unless a copy of said Notice of Default shall be given to Mortgagee pursuant to this Article 12. In the case of an assignment of such Mortgage or change in address of such Mortgagee, said assignee or Mortgagee, by written notice to Authority, may change the address to which such copies of Notices of Default are to be sent. Authority shall not be bound to recognize any assignment of such Mortgage unless and until Authority shall be given written notice thereof, a copy of the executed assignment, and the name and address of the assignee. Thereafter, such assignee shall be deemed to be the Mortgagee hereunder with respect to the Mortgage being assigned. If such Mortgage is held by more than one person, corporation or other entity, no provision of this Lease requiring Authority to give Notices of Default or copies thereof to said Mortgagee shall be binding upon Authority unless and until all of said holders shall designate in writing one of their number to receive all such Notices of Default and copies thereof and shall have given to Authority an original executed counterpart of such designation.

(3) Performance of Covenants. The Mortgagee shall have the right to perform any term, covenant or condition and to remedy any default by Lessee hereunder within the time periods specified herein, and Authority shall accept such performance with the same force and effect as if furnished by Lessee; provided, however, that said Mortgagee shall not thereby or hereby be subrogated to the rights of Authority. Notwithstanding the foregoing, nothing herein shall be deemed to permit or authorize such Mortgagee to undertake or continue the construction or completion of the Improvements without first having expressly assumed Lessee's obligations to Authority or its designee by written agreement satisfactory to Authority.

(4) Default by Lessee. In the event of a default by Lessee, Authority agrees not to terminate this Lease (1) unless and until Lessee's notice and cure periods have expired and Authority thereafter provides written notice of such default to any Mortgagee and such Mortgagee shall have failed to cure such Event of Default within thirty (30) days of delivery of such notice, or if any non-monetary default is not reasonably susceptible of cure

within the aforesaid thirty (30) day period then such period shall be extended to a maximum of sixty (60) days provided that Mortgagee shall have commenced to cure such default within the aforesaid thirty (30) day period and shall continue to diligently pursue such cure to completion, and (2) as long as:

(i) In the case of a default which cannot practicably be cured by the Mortgagee without taking possession of the Premises, Mortgagee shall proceed diligently to obtain possession of the Premises as Mortgagee (including possession by receiver) and, upon obtaining such possession, shall proceed diligently to cure such default; and

(ii) In the case of a default which is not susceptible to being cured by the Mortgagee, the Mortgagee shall institute foreclosure proceedings and diligently prosecute the same to completion (unless in the meantime it shall acquire Lessee's right, title and interest hereunder, either in its own name or through a nominee, by assignment in lieu of foreclosure) and upon such completion of acquisition or foreclosure such default shall be deemed to have been cured.

The Mortgagee shall not be required to obtain possession or to continue in possession as Mortgagee of the Premises pursuant to Subsection (i) above, or to continue to prosecute foreclosure proceedings pursuant to Subsection (ii) above, if and when such default shall be cured. Nothing herein shall preclude Authority from exercising any of its rights or remedies with respect to any other default by Lessee during any period of such forbearance, but in such event the Mortgagee shall have all of its rights provided for herein. If the Mortgagee, its nominee, or a purchaser in a foreclosure sale, shall acquire title to Lessee's right, title and interest hereunder and shall cure all continuing defaults which are susceptible of being cured by the Mortgagee or by said purchaser, as the case may be, then prior defaults which are not susceptible to being cured by the Mortgagee or by said purchaser shall no longer be deemed defaults hereunder. References herein to defaults which are "not susceptible of being cured" by a Mortgagee or purchaser (or similar language) shall not be deemed to refer to any default which the Mortgagee or purchaser is not able to cure because of the cost or difficulty of curing such default, but rather shall be deemed to refer only to defaults specifically relating to the identity of Lessee which by their nature can be cured only by Lessee (such as Lessee bankruptcy or a change in control of Lessee).

(5) No Obligation to Cure. Except as set forth herein, nothing herein contained shall require any Mortgagee to cure any default of Lessee hereunder.

(6) Separate Agreement. Authority shall, upon request, execute, acknowledge and deliver to each Mortgagee, an agreement prepared at the sole cost and expense of Lessee, in form satisfactory to each Mortgagee, between Authority, Lessee and the Mortgagees, agreeing to all of the provisions hereof.

(7) Form of Notice. Any Mortgagee under a Mortgage shall be entitled to receive the notices required to be delivered to it hereunder provided that such Mortgagee shall have delivered to each party a notice substantially in the following form:

The undersigned, whose address is _____, does hereby

certify that it is the Mortgagee (as such term is defined in that certain Ground Lease (the "Lease") dated as of **[**_____, 2012**]** between Grand Avenue M Housing Partners, LLC, and The Los Angeles Grand Avenue Authority, of the parcel of land described on Exhibit A attached hereto, which parcel is ground leased by Authority to Grand Avenue M Housing Partners, LLC (the "Party"). In the event that any notice shall be given of a default of the Party under the Lease, a copy thereof shall be delivered to the undersigned who shall have the rights of a Mortgagee to cure the same, as specified in the Lease. Failure to deliver a copy of such notice shall in no way affect the validity of the notice to the Party, but no such notice shall be effective as it relates to the rights of the undersigned under the Lease with respect to the Mortgage, including the commencement of any cure periods applicable to the undersigned, until actually received by the undersigned.

(8) Estoppel Certificate. Authority shall execute an estoppel certificate in form and substance reasonably satisfactory to the Mortgagee at the time of the initial advance in connection with the construction financing for the Project and from time to time thereafter, upon the reasonable request of the Mortgagee, which estoppel certificate shall include, without limitation, representations by the Authority that (i) this Lease (including all Exhibits attached hereto, which are incorporated by reference) is in full force and effect and unmodified except as expressly disclosed in the estoppel certificate, (ii) there are no known uncured defaults by either party under this Lease (including all Exhibits attached hereto, which are incorporated by reference), and/or (iii) after satisfactory completion of the Project, confirmation that the Project has been completed in accordance with the requirements of this Lease (including all Exhibits attached hereto, which are incorporated by reference).

(9) Further Assurances. Authority and Lessee agree to cooperate in including in this Lease, by suitable amendment, any provision which may be reasonably requested by the Mortgagee or any proposed Mortgagee for the purpose of (i) more fully or particularly implementing the Mortgagee protection provisions contained herein, (ii) adding mortgagee protections consistent with those contained herein and which are otherwise commercially reasonable, (iii) allowing such Mortgagee reasonable means to protect or preserve the security interest of the Mortgagee in the collateral, including its lien on the Premises and the collateral assignment of this Lease and/or (iv) clarifying terms or restructuring elements of the transactions contemplated hereby; provided, however, in no event shall Authority be obligated to materially modify any of Lessee's obligations or Authority's rights under this Lease in any manner not already contemplated in this Article 12.

12.6 **New Lease.**

12.6.1 Obligation to Enter Into New Lease. If this Lease is terminated by reasons of bankruptcy, assignment for the benefit of creditors, insolvency or any similar proceedings, operation of law, or an Excluded Default, Authority shall, upon the written request of any Mortgagee with respect to Lessee's entire leasehold estate under this Lease or all of the

ownership interests in Lessee (according to the priority described below if there are multiple Mortgagees), enter into a new lease (which shall be effective as of the date of termination of this Lease) with the Mortgagee or an affiliate thereof for the then remaining Term of this Lease on the same terms and conditions as shall then be contained in this Lease, provided that the Mortgagee cures all then existing monetary defaults under this Lease, and agrees to commence a cure of all then existing non-monetary Events of Default (other than Excluded Defaults) within thirty (30) days after the new lease is entered into, and thereafter diligently pursues such cure until completion. In no event, however, shall the Mortgagee be obligated to cure any Excluded Defaults. Authority shall notify all of the Mortgagees of a termination described in this Section 12.6 within thirty (30) days after the occurrence of such termination, which notice shall state (i) that this Lease has terminated in accordance with Section 12.6 of this Lease, and (ii) that the most junior of such Mortgagees has thirty (30) days following receipt of such notice within which to exercise its right to a new lease under this Section 12.6, or else it will lose such right. A Mortgagee's election shall be made by giving Authority written notice of such election within thirty (30) days after such Mortgagee has received the above-described written notice from the Authority. Within a reasonable period after request therefor, Authority shall execute and return to the Mortgagee any and all documents reasonably necessary to secure or evidence the Mortgagee's interest in the new lease or the Premises. From and after the effective date of the new lease, the Mortgagee (or its affiliate) shall have the same rights to a single transfer that are provided in Section 12.2.3 above, and shall enjoy all of the other rights and protections that are provided to a Foreclosure Transferee in this Article 12. Any other subsequent transfer or assignment of such new lease shall be subject to the approval of the Authority. If there are multiple Mortgagees, this right shall inure to the most junior Mortgagee in order of priority; provided, however, if such junior Mortgagee shall accept the new lease, the priority of each of the more senior Mortgagees shall be restored in accordance with all terms and conditions of such Mortgages(s). If a junior Mortgagee does not elect to accept the new lease within thirty (30) days of receipt of notice from Authority, the right to enter into a new lease shall be provided to the next most junior Mortgagee, under the terms and conditions described herein, until a Mortgagee either elects to accept a new lease, or no Mortgagee so elects.

12.6.2 Priority of New Lease. The new lease made pursuant to this Section 12.6 shall have the same priority as this Lease and shall be prior to any mortgage or other lien, charge or encumbrance on Authority's leasehold interest in the Premises, and any future leasehold mortgagee or other future holder of any lien on the leasehold interest in the Premises is hereby given notice of the provisions hereof.

12.7 **Participation in Certain Proceedings and Decisions**. Any Mortgagee shall have the right to intervene and become a party in any arbitration, litigation, condemnation or other proceeding affecting this Lease. Lessee's right to make any election or decision under this Lease with respect to any condemnation settlement, insurance settlement or restoration of the Premises following a casualty or condemnation shall be subject to the prior written approval of each then existing Mortgagee.

12.8 **Authority's Mortgages and Encumbrances**. Any mortgage, deed of trust or other similar encumbrance granted by Authority upon its leasehold interest in the Premises shall be subject and subordinate to all of the provisions of this Lease and to all Mortgages.

12.9 **No Merger**. Without the written consent of each Mortgagee, the leasehold interest created by this Lease shall not merge with the fee interest in all or any portion of the Premises, notwithstanding that the fee and leasehold interests are held at any time by the same person or entity.

12.10 **Mortgagee Priority**. For avoidance of doubt, in the event of a conflict between or among Mortgagees with respect to the exercise of the rights of Mortgagees under this Lease, the most senior Mortgagee shall control.

13. **DEFAULTS.**

13.1 **Defaults**. A failure by Lessee to perform any term or provision of this Lease to be performed by it, or a delay in such performance, shall constitute an "**Event of Default**" under this Lease. Lessee must immediately commence to cure, correct or remedy such failure or delay and must complete such cure, correction or remedy as soon as reasonably possible thereafter. During any applicable "Cure Period" (as defined below), Lessee shall not be deemed to be in default under this Lease so long as it is diligently proceeding to cure, correct or remedy the failure or delay. Without limiting the generality of the foregoing, the following events shall also constitute Events of Default hereunder and, subject to the rights of Mortgagees under Article 12, there shall be no Cure Period applicable thereto:

13.1.1 A default by Lessee under the DDA with respect to Phase IIB prior to recordation of a Certificate of Completion for Phase IIB, after lapse of applicable cure periods thereunder;

13.1.2 The occurrence of a Bankruptcy/Dissolution Event with respect to Lessee;

13.1.3 Lessee's abandonment, vacation, or discontinuance of use of the Premises, or any substantial portion thereof, for a period of one hundred eighty (180) days, unless due to Force Majeure or renovations or repairs required or permitted to be made under this Lease; or

13.1.4 If prior to the issuance of the Certificate of Completion for the Phase IIB Improvements, Lessee:

(1) fails to proceed with the construction of the Phase IIB Improvements as required by this Lease for a period of three (3) months after Notice of Default from Authority, subject to Force Majeure pursuant to Section 5.10;

(2) abandons or substantially suspends the construction of the Phase IIB Improvements for a period of three (3) months after Notice of Default from Authority;

(3) transfers or suffers any involuntary Transfer of any portion of the Premises in violation of this Lease or the DDA; or

(4) fails to complete the construction of the Phase IIB Improvements and obtain a Certificate of Completion therefor within two (2) years of the deadline therefor set forth on the Schedule of Performance, subject to Force Majeure pursuant to Section 5.10.

Each of Items (1) – (4) in Section 13.1.4 above is referred to herein as a "**Terminating Event**".

13.2 **Notice of Default**. Except for Events of Default as to which there is no Cure Period for Lessee hereunder, the Authority shall give written notice of default to Lessee specifying the default complained of ("**Notice of Default**"). Failure or delay in giving such notice shall not constitute a waiver of any default nor shall it change the time of default. Except as otherwise expressly provided in this Lease, any failure or delay by the Authority in asserting any of its rights or remedies as to any default shall not operate as a waiver of any default or of any such rights or remedies or deprive Authority of its right to institute and maintain any actions or proceedings which it may deem necessary to protect, assert or enforce any such rights or remedies. Any Notice of Default required to be given by Authority shall be in addition to, and not in lieu of, any notice required under Section 1161 of the California Code of Civil Procedure.

13.3 **Time to Cure**. Upon the receipt of a Notice of Default, Lessee shall have ten (10) business days to cure such failure if it is a failure to pay a sum of money, and thirty (30) days to cure such failure if it is a failure to perform any other provision hereof (such 10-business day or 30-day period being referred to herein as the "**Cure Period**"); provided, however, that if a longer period is expressly provided for under this Lease for the cure of a default, then the Cure Period shall refer to such longer period. Notwithstanding the foregoing, if a non-monetary default is not reasonably susceptible of cure within the aforesaid thirty (30) day period then, provided that Lessee shall commence to cure such default upon receipt of the Notice of Default and shall continue at all times to diligently pursue such cure to completion, the Cure Period shall be extended by the amount of time reasonably necessary to cure such default.

13.4 **Limitation on Events of Default**. Lessee shall not be considered in default as to any provision of this Lease when such default is the result of or pursuant to, any process, order, or decree of any court or regulatory body of competent jurisdiction, or any other circumstances which are physically impossible to cure provided Lessee uses due diligence in pursuing whatever is required to obtain release from or reversal of such process, order, or decree or is attempting to remedy such other circumstances preventing its performance.

13.5 **Remedies**. Upon the occurrence of an Event of Default by Lessee, and subject to the rights of any Mortgagee or Investor to cure such Event of Default as provided in Article 12 hereof, Authority shall have, in addition to any other remedies in law or equity, the following remedies which are cumulative:

13.5.1 Terminate Lease. If a Terminating Event occurs, Authority shall have the right, at its option, to terminate this Lease and reenter and take possession of the Premises with all improvements thereon. After the occurrence of a Terminating Event, Authority shall give Lessee a notice stating that a Terminating Event has occurred and is continuing and if Lessee does not cure such Terminating Event within sixty (60) days after such second notice, subject to Force Majeure pursuant to Section 5.10, Authority may exercise its rights under this Section 13.5.1.

Authority's rights under this Section 13.5.1 to terminate this Lease shall terminate when a Certificate of Completion is issued as to all of the Phase IIB Improvements. Authority's right to terminate this Lease, reenter, and repossess the Premises, to the extent provided in this Lease, shall be subordinate and subject to and be limited by and shall not defeat, render invalid, or limit:

(a) Any Mortgage permitted by this Lease; or

(b) Any rights or interests provided in this Lease for the protection of the holder of such Mortgages.

Upon termination of this Lease as to the Premises upon a Terminating Event as provided in this Section 13.5.1, Authority shall, pursuant to its responsibilities under state law, use its best efforts to ground lease the Premises as soon as possible, in a commercially reasonable manner and consistent with the objectives of such law and of the Redevelopment Plan, to a qualified and responsible party or parties (as determined by Authority) who will assume the obligation of making or completing such Improvements as are acceptable to Authority, CRA and County in accordance with the Permitted Uses and in a manner satisfactory to Authority. Upon such ground lease of the Premises by Authority, the proceeds thereof shall be applied as follows:

(i) First, to reimburse Authority, CRA and County for all costs and expenses incurred by them, including but not limited to salaries of personnel and legal fees incurred in connection with the recapture, management and sale or ground lease of the Premises (but less any net income derived by the Authority from any part of the Premises in connection with such management); all taxes, installments of assessments payable prior to sale or ground lease, and water and sewer charges with respect to the Premises; any payments made or necessary to be made to discharge any encumbrances or liens existing on the Premises at the time of termination of this Lease, or to discharge or prevent from attaching or being made any subsequent encumbrances or liens due to obligations, defaults or acts of Lessee, its successors or assigns; expenditures made or obligations incurred with respect to making or completion of the Improvements on the Premises or any part thereof; and any amounts otherwise owing to Authority, CRA or County by Lessee, or its successors or assigns;

(ii) Second, to reimburse Lessee, its successors or assigns, up to the amount equal to the fair market value of the Improvements Lessee placed on the Premises (but not to exceed all fees, costs and expenses incurred by Lessee in connection with the transactions contemplated under this Lease (including the design and construction of the Phase IIB Improvements)), less any gains or income withdrawn or made by the Lessee from the Premises or the Improvements thereon. Notwithstanding the foregoing, the amount calculated pursuant to this Subsection (ii) shall not exceed the fair market value of the Improvements on the Premises as of the date of the default or failure which gave rise to Authority's right to terminate this Lease; and

(iii) Third, any balance remaining after such reimbursements shall be retained by Authority as its property.

The rights established by this Section 13.5.1 shall be interpreted in light of the fact that Authority is ground leasing the Premises to Lessee for development and not for speculation.

13.5.2 Keep Lease in Effect. Without terminating this Lease, so long as Authority does not deprive Lessee of legal possession of the Premises and allows Lessee to assign or sublet subject only to Authority's rights set forth herein, Authority may continue this Lease in effect and bring suit from time to time for rent and other sums due, and for Lessee's breach of other covenants and agreements herein. No act by or on behalf of Authority under this provision shall constitute a termination of this Lease unless Authority gives Lessee written notice of termination. It is the intention of the parties to incorporate the provisions of California Civil Code Section 1951.4 by means of this provision.

13.5.3 Termination Following Continuance. Even though it may have kept this Lease in effect pursuant to Subsection 13.5.2, thereafter Authority may elect to terminate this Lease and all of Lessee's rights in or to the Premises if Authority has such termination right under Section 13.5.1, unless prior to such termination Lessee shall have cured the Event of Default or shall have satisfied the provisions of Section 13.4, hereof.

13.6 **Damages**. Should Authority have the right and elect to terminate this Lease pursuant to Section 13.5.1, Authority shall be entitled to recover from Lessee as damages:

13.6.1 Unpaid Rent. The worth, at the time of the award, of the unpaid rent that had been earned at the time of termination of this Lease;

13.6.2 Post-Termination Rent. The worth, at the time of the award, of the unpaid rent that would have been earned under this Lease after the date of termination of this Lease until the date Lessee surrenders possession of the Premises to Authority; and

13.6.3 Other Amounts. The amounts necessary to compensate Authority for the sums and other obligations which under the terms of this Lease become due prior to, upon or as a result of the expiration of the Term or sooner termination of this Lease, including without limitation, those amounts of unpaid taxes, insurance premiums and utilities for the time preceding surrender of possession, the cost of removal of rubble, debris and other above-ground Improvements, attorney's fees, and court costs.

13.7 **Authority's Right to Cure Lessee's Default**. Authority at any time after Lessee's failure to perform any covenant, condition or agreement contained herein beyond any applicable notice and cure period, may cure such failure at Lessee's cost and expense. If, after delivering to Lessee two (2) or more notices within a ten (10) year period with respect to any such default, Authority at any time during such ten (10) year period, by reason of Lessee's continuing failure, pays or expends any sum, Lessee shall immediately pay to Authority the lesser of the following amounts: (1) twice the amount expended by Authority to cure such default and (2) the amount expended by Authority to cure such default, plus One Thousand Dollars ($1,000.00), adjusted by the percentage increase in the CPI since the Commencement Date. Authority shall give any Mortgagees the reasonable opportunity to cure Lessee's default as provided in Section 12.5 above prior to Authority's expenditure of any amounts thereon.

13.8 **Default by Authority**. Notwithstanding anything to the contrary in this Lease, Authority's liability to Lessee for damages arising out of or in connection with Authority's breach of any provision or provisions of this Lease shall not exceed the value of Authority's equity interest in the Premises and its right to insurance proceeds in connection with the policies required under Article 9 hereof.

14. HAZARDOUS MATERIALS.

14.1 Notice to Authority.

Lessee shall immediately notify Authority in writing during the Term of: (a) the discovery of any concentration or amount of Hazardous Materials on or under the Premises requiring notice to be given to any governmental entity or Authority under all Hazardous Materials Laws; (b) any knowledge by Lessee (after verification of the veracity of such knowledge to Lessee's reasonable satisfaction) that the Premises do not comply with any Hazardous Materials Laws; (c) the receipt by Lessee of written notice of any Hazardous Materials claims; and (d) the discovery by Lessee of any occurrence or condition on the Premises or on any real property located within 2,000 feet of the Premises that could cause the Premises or any part thereof to be designated as a "hazardous waste property" or as a "border zone property" under California Health and Safety Code Sections 25220, et seq., or regulations adopted therewith.

14.2 Use and Operation of Premises.

Lessee shall not use the Premises or allow the Premises to be used for the generation, manufacture, storage, disposal, or Release of Hazardous Materials in violation of Hazardous Materials Laws. Lessee shall use commercially reasonable efforts to ensure that no agent, employee, or contractor of Lessee, nor any authorized user of the Premises, uses the Premises or allows the Premises to be used for the generation, manufacture, storage, disposal or Release of Hazardous Materials in violation of Hazardous Materials Laws. Lessee's agreements and contracts with such third parties shall include covenants for compliance by such third parties with the aforementioned environmental covenants. Lessee shall comply and cause the Premises to comply with Hazardous Materials Laws. The storage and use, in customary amounts, of normal cleaning supplies and other items that are generally used in connection with the construction of improvements similar to the Project shall be permitted so long as such materials are used and stored in accordance with Hazardous Materials Laws.

14.3 Remedial Actions.

If Lessee has actual knowledge of the presence of any Hazardous Materials on or under the Premises that are in violation of Hazardous Materials Laws, Lessee shall immediately take or cause its Sublessee to immediately take, at no cost or expense to Authority, all handling, treatment, removal, storage, decontamination, cleanup, transport, disposal or other remedial action, if any, required by any Hazardous Materials Laws or by any orders or regulations of any governmental entity or agency or any judgment, consent decree, settlement or compromise with respect to any Hazardous Materials claims. The foregoing, however, shall be subject to Lessee's right of contest below.

14.4 **Right of Contest**.

Lessee may contest in good faith any claim, demand, levy or assessment under Hazardous Materials Laws if: (a) the contest is based on a material question of law or fact raised by Lessee in good faith, (b) Lessee promptly commences and thereafter diligently pursues the contest, (c) the contest will not materially impair the taking of any remedial action with respect to such claim, demand, levy or assessment, and (d) if requested by Authority or lender, Lessee deposits with Authority or lender any funds or other forms of assurance Authority in good faith from time to time determines appropriate to protect Authority from the consequences of the contest being unsuccessful and any remedial action then reasonably necessary. No Event of Default shall be deemed to exist with respect to any claim, demand, levy or attachment being contested by Lessee under the conditions of this Section.

14.5 **Environmental Indemnity**.

Lessee shall defend, indemnify, and hold Authority Indemnified Parties free and harmless against any claims, demands, administrative actions, litigation, liabilities, losses, damages, response costs, and penalties, including all costs of legal proceedings and attorney's fees, that Authority Indemnified Parties may directly or indirectly sustain or suffer as a consequence of any inaccuracy or breach of any Lessee representation, warranty, agreement, or covenant contained in this Lease with respect to Hazardous Materials, or as a consequence of any use, generation, manufacture, storage, Release, or disposal (whether or not Lessee knew of same) of any Hazardous Materials occurring during Lessee's use or occupancy of the Premises, provided that the terms of the foregoing indemnity shall not apply to conditions on the Premises that existed prior to the date of this Lease, nor shall the terms of the foregoing indemnity apply to (a) matters caused by the Authority Indemnified Parties or (b) conditions on the Premises arising after Lessee's surrender of the Premises other than any conditions that are caused by Lessee, its members, officers, contractors, agents, or any other party for which Lessee may be liable, whether by such party's action or inaction. The provisions of this Section 14.5 shall not bind or be applicable to any lender or to any purchaser at any judicial or non-judicial foreclosure sale or deed-in-lieu thereof or to the first successor or assign thereof.

15. **MISCELLANEOUS.**

15.1 **Quiet Enjoyment**. Upon the paying of all rent hereunder and performing each of the other covenants, agreements and conditions of this Lease required to be performed by Lessee, Lessee shall lawfully and quietly hold, occupy and enjoy the Premises during the Term without

hindrance or molestation of anyone lawfully claiming by, through or under the Authority, subject, however, to the provisions of this Lease.

15.2 **Time is of the Essence**. Except as specifically otherwise provided for in this Lease, time is of the essence of this Lease and applies to all times, restrictions, conditions, and limitations contained herein.

15.3 **Reserved**.

15.4 **Authority Disclosure and Lessee's Waiver**.

15.4.1 Disclosures and Waiver.

(1) Lessee acknowledges that it may incur additional engineering and construction costs above and beyond those contemplated by either party to this Lease at the time of the execution hereof and Lessee agrees that, it will make no demands upon Authority for any construction, alterations, or any kind of labor that may be necessitated in connection therewith.

(2) Lessee hereby waives, withdraws, releases, and relinquishes any and all claims, suits, causes of action (other than a right to terminate as otherwise provided in this Lease), rights of rescission, or charges against Authority, its officers, agents, employees or volunteers which Lessee now has or may have or assert in the future which are based upon any defects in the physical condition of the Premises and the soil thereon and thereunder or the environmental condition of the Premises, regardless of whether or not said conditions were known at the time of the execution of this instrument.

(3) California Civil Code Section 1542 provides as follows:

> A GENERAL RELEASE DOES NOT EXTEND TO CLAIMS WHICH THE CREDITOR DOES NOT KNOW OR SUSPECT TO EXIST IN HIS OR HER FAVOR AT THE TIME OF EXECUTING THE RELEASE, WHICH IF KNOWN BY HIM OR HER MUST HAVE MATERIALLY AFFECTED HIS OR HER SETTLEMENT WITH THE DEBTOR.

By initialing this paragraph, Lessee acknowledges that it has read, is familiar with, and waives the provisions of California Civil Code §1542 set forth above, and agrees to all of the provisions of Subsection 15.4.1 above.

_____
Lessee's Initials

15.4.2 Right of Offset. Lessee acknowledges that the rent provided for in this Lease has been agreed upon in light of Lessee's construction, maintenance and repair obligations set forth herein, and, notwithstanding anything to the contrary provided in this Lease or by applicable Law, Lessee hereby waives any and all rights, if any, to make repairs at the expense of Authority and to deduct or offset the cost thereof from the Leasehold Acquisition Fee or the First Sale Profit Payment Rent or any other sums due Authority hereunder.

15.5 **Holding Over**. If Lessee holds over after the expiration of the Term for any cause, with or without the express or implied consent of Authority, such holding over shall be deemed to be a tenancy from month-to-month only, and shall not constitute a renewal or extension of the Term. During any such holdover period, Lessee shall pay a base ground rent equal to two hundred percent (200%) of the prevailing fair market rental rate for thirty-five (35) year ground leases of land in the Los Angeles area (excluding the value of the Improvements) as reasonably determined by Authority. Such holdover shall otherwise be subject to the same terms, conditions, restrictions and provisions as herein contained. Such holding over shall include any time employed by Lessee to remove machines, appliances and other equipment during the time periods herein provided for such removal. Nothing contained herein shall be construed as consent by Authority to any holding over by Lessee, and Authority expressly reserves the right to require Lessee to surrender possession of the Premises to Authority as provided in this Lease upon the expiration or other termination of this Lease. The provisions of this Section 15.5 shall not be deemed to limit or constitute a waiver of any other rights or remedies of Authority provided at law or in equity. If Lessee fails to surrender the Premises upon the termination or expiration of this Lease, in addition to any other liabilities to Authority accruing therefrom, Lessee shall protect, defend, indemnify and hold Authority harmless from all losses, costs (including reasonable attorneys' fees), damages, claims and liabilities resulting from such failure, including, without limitation, any claims made by any succeeding tenant arising from such failure to surrender, and any lost profits to Authority resulting therefrom.

15.6 **Waiver of Conditions or Covenants**. Except as stated in writing by the waiving party, any waiver by either party of any breach of any one or more of the covenants, conditions, terms, and agreements of this Lease shall not be construed to be a waiver of any subsequent or other breach of the same or of any other covenant, condition, term, or agreement of this Lease, nor shall failure on the part of either party to require exact full and complete compliance with any of the covenants, conditions, terms, or agreements of this Lease be construed as in any manner changing the terms hereof or estopping that party from enforcing the full provisions hereof, nor shall the terms of this Lease be changed or altered in any manner whatsoever other than by written agreement of Authority and Lessee. No delay, failure, or omission of Authority to re-enter the Premises or of either party to exercise any right, power, privilege, or option, arising from any default, nor any subsequent acceptance of rent then or thereafter accrued shall impair any such right, power, privilege, or option or be construed as a waiver of or acquiescence in such default or as a relinquishment of any right. No notice to Lessee shall be required to restore or revive "time of the essence" after the waiver by Authority of any default. Except as specifically provided in this Lease, no option, right, power, remedy, or privilege of either party shall be construed as being exhausted by the exercise thereof in one or more instances.

15.7 **Remedies Cumulative**. The rights, powers, options, and remedies given Authority under this Lease shall be cumulative except as otherwise specifically provided for in this Lease.

15.8 **Authorized Right of Entry**. In any and all cases in which provision is made herein for termination of this Lease, or for exercise by Authority of right of entry or re-entry upon the Premises, or in case of abandonment or vacation of the Premises by Lessee, Lessee hereby irrevocably authorizes Authority to enter upon the Premises and remove any and all

persons and property whatsoever situated upon the Premises and place all or any portion of said property, except such property as may be forfeited to Authority, in storage for the account of and at the expense of Lessee.

Lessee agrees to indemnify, defend and save harmless Authority from any cost, expense, loss or damage arising out of or caused by any such entry or re-entry upon the Premises under this Section 15.8, and the removal of persons and property and storage of such property by Authority and its agents, except to the extent caused by the gross negligence or willful misconduct of Authority, its agents or employees.

15.9 **Place of Payment and Filing**. All Lease Consideration shall be paid to and all statements and reports herein required and other items deliverable to Authority hereunder shall be filed with or delivered to the Authority. Checks, drafts, letters of credit and money orders shall be made payable to the Los Angeles Grand Avenue Authority.

15.10 **Service of Written Notice or Process**. Any notice required to be sent under this Lease shall be in compliance with and subject to this Section 15.10. If Lessee is not a resident of the State of California, or is an association or partnership without a member or partner resident of said State, or is a foreign corporation, Lessee shall file with Director a designation of a natural person residing in the County of Los Angeles, State of California, or a service company, such as CT Corporation, which is authorized to accept service, giving his or its name, residence, and business address, as the agent of Lessee for the service of process in any court action between Lessee and Authority, arising out of or based upon this Lease, and the delivery to such agent of written notice or a copy of any process in such action shall constitute a valid service upon Lessee.

If for any reason service of such process upon such agent is not possible, then any officer of Lessee may be personally served with such process outside of the State of California and such service shall constitute valid service upon Lessee; and it is further expressly agreed that Lessee is amenable to such process and submits to the jurisdiction of the court so acquired and waives any and all objection and protest thereto.

Written notice addressed to Lessee at the addresses below-described, or to such other address that Lessee may in writing file with Director, shall be deemed sufficient if said notice is delivered personally, by telecopy or facsimile transmission or, provided in all cases there is a return receipt requested and postage or other delivery charges prepaid, by registered or certified mail posted in the County of Los Angeles, California, Federal Express or DHL, or such other services as Lessee and Authority may mutually agree upon from time to time. Each notice shall be deemed received and the time period for which a response to any such notice must be given or any action taken with respect thereto (including cure of any prospective Event of Default) shall commence to run from the date of actual receipt of the notice by the addressee thereof in the case of personal delivery, telecopy or facsimile transmission if before 5:00 p.m. on regular business days, or upon the expiration of the third (3rd) business day after such notice is sent from within Los Angeles County in the case of such registered or certified mail as authorized in this Section.

Copies of any written notice to Lessee shall also be simultaneously mailed to any Mortgagee of which Authority has been given written notice and an address for service. Notice given to Lessee as provided for herein shall be effective as to Lessee notwithstanding the failure to send a copy to such Mortgagee.

As of the date of execution hereof, the persons authorized to receive notice on behalf of Authority and Lessee are as follows:

AUTHORITY: The Los Angeles Grand Avenue Authority
c/o Helen S. Parker
Principal Deputy County Counsel
County of Los Angeles
Office of the County Counsel
Public Works Division
651 Kenneth Hahn Hall of Administration
Los Angeles, California 90012

With a Copy to:

Timothy J. Chung
Deputy City Attorney
Los Angeles City Attorney's Office
1200 West 7th Street, Suite 500
Los Angeles, CA 90017

and to

The Community Redevelopment Agency of the City of Los Angeles, California
354 South Spring Street
Los Angeles, California 90013
Attention: Regional Administrator

and to

County of Los Angeles
500 W. Temple Street, Room 713
Los Angeles, California 90012
Attention: Chief Administrative Officer

LESSEE: Grand Avenue M Housing Partners, LLC
c/o The Related Companies of California, LLC
18201 Von Karman Avenue, Suite 900
Irvine, California 92612
Attention: William A. Witte

With a Copy to:

Bocarsly Emden Cowan Esmail & Arndt LLP
633 W. 5th Street, 70th Floor
Los Angeles, California 90071
Attention: Lance Bocarsly

INVESTOR: BF Grand Avenue, LP
c/o Boston Financial Investment Management, LP
101 Arch Street, 13th Floor
Boston, Massachusetts 02110
Attention: Asset Management – Parcel M Grand Avenue Apartments

With a Copy to:

Holland & Knight LLP
10 St. James Avenue
Boston, Massachusetts 02116
Attention: James E. McDermott, Esq.

15.11 **Interest**. In any situation where Authority has advanced sums on behalf of Lessee pursuant to this Lease, such sums shall be due and payable immediately upon demand, together with interest at the Applicable Rate (unless another rate is specifically provided herein) from the date such sums were first advanced, until the time payment is received. If Lessee repays sums advanced by Authority on Lessee's behalf with interest in excess of the maximum rate permitted by applicable Laws, Authority shall refund such excess payment.

15.12 **Captions**. The captions contained in this Lease are for informational purposes only, and are not to be used to interpret or explain the particular provisions of this Lease.

15.13 **Attorneys' Fees**. In the event of any action, proceeding or arbitration arising out of or in connection with this Lease, whether or not pursued to judgment, the prevailing party shall be entitled, in addition to all other relief, to recover its costs and reasonable attorneys' fees, including all fees, costs and expenses incurred in executing, perfecting, enforcing and collecting any judgment.

15.14 **Amendments**. Lessee and Authority mutually agree to consider reasonable requests for amendments to this Lease that may be made by any of the parties hereto, lending institutions, or bond counsel or financial consultants to Authority, provided such requests are consistent with this Lease and would not substantially alter the basic business terms included herein. Any amendments hereto shall be subject to the prior approval of the Governing Entities.

15.15 **Time For Director Approvals**. Except where a different time period is specifically provided for in this Lease, whenever in this Lease the approval of Director is

required, approval shall be deemed not given unless within thirty (30) days after the date of the receipt of the written request for approval from Lessee, Director either (a) approves such request in writing, or (b) notifies Lessee that it is not reasonably possible to complete such review within the thirty (30) day period, provides a final date for approval or disapproval by Director (the "**Extended Time**") and approves such request in writing prior to such Extended Time. If Director does not approve such request in writing within such Extended Time, the request shall be deemed to be disapproved.

15.16 **Time For Authority Action**. Notwithstanding anything to the contrary contained in this Lease, wherever Director determines that an Authority action required hereunder necessitates approval from or a vote of Authority's Board or any of the boards or commissions of any or all of the Governing Entities, the time period for Authority performance of such action shall be extended as is necessary in order to secure such approvals or votes, and Authority shall not be deemed to be in default hereunder in the event that it fails to perform such action within the time periods otherwise set forth herein.

15.17 **Estoppel Certificates**. Each party agrees to execute, within ten (10) business days after the receipt of a written request therefor from the other party, a certificate stating: that this Lease is in full force and effect and is unmodified (or stating otherwise, if true); and that, to the best knowledge of such party, the other party is not then in default under the terms of this Lease (or stating the grounds for default if such be the case). Prospective purchasers and lenders and Anchor Tenants may rely on such statements, but such statements shall not serve as a bar to the right to conduct audits as permitted hereunder or collect amounts owed hereunder.

15.18 **Indemnity Obligations**. Whenever in this Lease there is an obligation to indemnify, hold harmless and/or defend, irrespective of whether or not the obligation so specifies, it shall include the obligation to defend and pay reasonable attorneys' fees, reasonable expert fees and court costs.

15.19 **Incorporation By Reference**. Article 15 of the DDA [Representations, Warranties and Covenants] is hereby incorporated into this Lease by this reference, as if the terms and provisions of such Article 15 were fully set forth herein, except that all references in such Article 15 to the "Developer" shall be deemed to refer to Lessee, and all references in such Article 15 to the DDA shall be deemed to refer to this Lease.

16. **ARBITRATION.**

Except as otherwise provided by this Article 16, disputed matters which may be arbitrated pursuant to this Lease shall be settled by binding arbitration in accordance with the then existing provisions of the California Arbitration Act, which as of the date hereof is contained in Title 9 of Part III of the California Code of Civil Procedure, commencing with Section 1280.

(a) Either party (the "**Initiating Party**") may initiate the arbitration process by sending written notice ("**Request for Arbitration**") to the other party (the "**Responding Party**") requesting initiation of the arbitration process and setting forth a brief description of the

dispute or disputes to be resolved and the contention(s) of the Initiating Party. Within ten (10) days after service of the Request for Arbitration, the Responding Party shall file a "Response" setting forth the Responding Party's description of the dispute and the contention(s) of Responding Party. If Responding Party has any "Additional Disputes" he shall follow the format described for the Initiating Party. The Initiating Party will respond within ten (10) days after service of the Additional Disputes setting forth Initiating Party's description of the Additional Disputes and contentions regarding the Additional Disputes.

(b) Notwithstanding anything to the contrary which may now or hereafter be contained in the California Arbitration Act, the parties agree that the following provisions shall apply to any and all arbitration proceedings conducted pursuant to this Lease:

16.1 **Selection of Arbitrator**. The parties shall attempt to agree upon an arbitrator who shall decide the matter. If, for any reason, the parties are unable to agree upon the arbitrator within ten (10) days of the date the Initiating Party serves a request for arbitration on the Responding Party, then at any time on or after such date either party may petition for the appointment of the arbitrator as provided in California Code of Civil Procedure Section 1281.6.

16.2 **Arbitrator**. The arbitrator shall be a retired judge of the California Superior Court, Court of Appeal or Supreme Court, or any United States District Court or Court of Appeals located within the State, who has agreed to resolve civil disputes.

16.3 **Scope of Arbitration**. Authority and Lessee affirm that the mutual objective of such arbitration is to resolve the dispute as expeditiously as possible. The arbitration process shall not apply or be used to determine issues other than (i) those presented to the arbitrator by the Initiating Party provided those disputes are arbitrable disputes pursuant to this Lease, (ii) Additional Disputes presented to the arbitrator by the Responding Party, provided that any such Additional Disputes constitute arbitrable disputes pursuant to this Lease and (iii) such related preliminary or procedural issues as are necessary to resolve (i) and/or (ii) above. The arbitrator shall render an award. Either party may, at its sole cost and expense, request a statement of decision explaining the arbitrator's reasoning which shall be in such detail as the arbitrator may determine. Unless otherwise expressly agreed by the parties in writing, the award shall be made by the arbitrator no later than the sooner of six (6) months after the date on which the arbitrator is selected by mutual agreement or court order, whichever is applicable, or five (5) months after the date of a denial of a petition to disqualify a potential arbitrator for cause. Authority and Lessee hereby instruct the arbitrator to take any and all actions deemed reasonably necessary, appropriate or prudent to ensure the issuance of an award within such period. Notwithstanding the foregoing, failure to complete the arbitration process within such period shall not render such arbitration or any determination made therein void or voidable.

16.4 **Immunity**. The parties hereto agree that the arbitrator shall have the immunity of a judicial officer from civil liability when acting in the capacity of arbitrator pursuant to this Lease.

16.5 **Section 1282.2**. The provisions of Code of Civil Procedure § 1282.2 shall apply to the arbitration proceedings except to the extent they are inconsistent with the following:

16.5.1 Unless the parties otherwise agree, the arbitrator shall appoint a time and place for the hearing and shall cause notice thereof to be served as provided in said § 1282.2 not less than ninety (90) days before the hearing, regardless of the aggregate amount in controversy.

16.5.2 No later than sixty (60) days prior to the date set for the hearing (unless, upon a showing of good cause by either party, the arbitrator establishes a different period), in lieu of the exchange and inspection authorized by Code of Civil Procedure § 1282.2(a)(2)(A), (B) and (C), the parties shall simultaneously exchange the following documents by personal delivery to each other and to the arbitrator:

(1) A written Statement of Position, as further defined below, setting forth in detail that party's final position regarding the matter in dispute and specific numerical proposal for resolution of monetary disputes;

(2) A list of witnesses each party intends to call at the hearing, designating which witnesses will be called as expert witnesses and a summary of each witness's testimony;

(3) A list of the documents each intends to introduce at the hearing, together with complete and correct copies of all of such documents; and,

(4) If the issue involves a valuation matter, a list of all Written Appraisal Evidence (as defined below) each intends to introduce at the hearing, together with complete and correct copies of all of such Written Appraisal Evidence.

(5) No later than twenty (20) days prior to the date set for the hearing, each party may file a reply to the other party's Statement of Position ("**Reply**"). The Reply shall contain the following information:

(i) A written statement, to be limited to that party's rebuttal to the matters set forth in the other party's Statement of Position;

(ii) A list of witnesses each party intends to call at the hearing to rebut the evidence to be presented by the other party, designating which witnesses will be called as expert witnesses;

(iii) A list of the documents each intends to introduce at the hearing to rebut the evidence to be presented by the other party, together with complete and correct copies of all of such documents (unless, upon a showing of good cause by either party, the arbitrator establishes a different deadline for delivering true and correct copies of such documents);

(iv) If the issue involves a valuation matter, a list of all Written Appraisal Evidence, or written critiques of the other party's Written Appraisal Evidence if any, each intends to introduce at the hearing to rebut the evidence presented by the other party, together with complete and correct copies of all of such Written Appraisal Evidence (unless, upon a showing of good cause by either party, the arbitrator establishes a different deadline for delivering true and correct copies of such Written Appraisal Evidence); and

(v) Witnesses or documents to be used solely for impeachment of a witness need not be identified or produced.

(6) The arbitrator is not bound by the rules of evidence, but may not consider any evidence not presented at the hearing. The arbitrator may exclude evidence for any reason a court may exclude evidence or as provided in this Lease.

16.6 **Statements of Position**. The Statement of Position to be delivered by Section 16.5 shall comply with the following requirements:

16.6.1 Where the dispute involves rent to be charged, market values, insurance levels or other monetary amounts, the Statements of Position shall numerically set forth the existing market value, insurance level and/or other monetary amounts in dispute, the party's proposed new market value, insurance level and/or other monetary amounts, and shall additionally set forth the facts supporting such party's position.

16.6.2 If the dispute relates to the cost of Alterations, the Statements of Position shall set forth the facts supporting such party's position and the amount of each cost which the party believes should be allowed or disallowed.

16.7 **Written Appraisal Evidence**. Neither party may, at any time during the proceedings, introduce any written report which expresses an opinion regarding the fair market value of the Premises, or any portion thereof, ("**Written Appraisal Evidence**") unless such Written Appraisal Evidence substantially complies with the following standards: it shall have been submitted in accordance with the requirements of Subsection 5(iv) above; it shall describe the Premises; identify the uses permitted thereon; describe or take into consideration the terms, conditions and restrictions of this Lease; correlate the appraisal method(s) applied; discuss the relevant factors and data considered; review rentals paid by lessees within Southern California who are authorized to conduct similar activities on comparable leaseholds; and, describe the technique of analysis, limiting conditions and computations that were used in the formulation of the valuation opinion expressed. Written Appraisal Evidence in connection with disputes arising out of Article 6 of this Lease shall predicate any valuation conclusions contained therein on the Income Approach. Written Appraisal Evidence shall in all other respects be in material conformity and subject to the requirements of the Code of Professional Ethics and the Standards of Professional Practice of The Appraisal Institute or any successor entity.

16.8 **Evidence**. The provisions of Code of Civil Procedure § 1282.2(a)(2)(E) shall not apply to the arbitration proceeding. The arbitrator shall have discretion to preclude a party from introducing witnesses, documents or Written Appraisal Evidence (other than impeachment testimony) unless such information was previously delivered to the other party in accordance with Section 16.5 and, in the case of Written Appraisal Evidence, substantially complies with the requirements of Section 16.7, or such evidence consists of a transcript of a deposition of an expert witness conducted pursuant to Section 16.9. Notwithstanding the foregoing, the arbitrator may allow a party to introduce evidence which, in the exercise of reasonable diligence, could not have been delivered to the other party in accordance with Section 16.5, provided such evidence is otherwise permissible hereunder.

16.9 **Discovery**. The provisions of Code of Civil Procedure § 1283.05 shall not apply to the arbitration proceedings except to the extent incorporated by other sections of the California Arbitration Act which apply to the arbitration proceedings. There shall be no pre-arbitration discovery except as provided in Section 16.5; provided, however, each party shall have the right, no later than seven (7) days prior to the date first set for the hearing, to conduct a deposition, not to exceed three (3) hours in duration unless the arbitrator otherwise determines that good cause exists to justify a longer period, of any person identified by the other party as an expert witness.

16.10 **Awards of Arbitrators**.

16.10.1 Monetary Issues. With respect to monetary disputes (including without limitation disputes regarding First Sale Profit Payment Rent and the amount of coverage under the policies of insurance required pursuant to Article 9 of this Lease), the arbitrator shall have no right to propose a middle ground or any proposed modification of either Statement of Position. The arbitrator shall instead select whichever of the two Statements of Position is the closest to the monetary or numerical amount that the arbitrator determines to be the appropriate determination of the rent, expense, claim, cost, delay, coverage or other matter in dispute and shall render an award consistent with such Statement of Position. For purposes of this Section 16.10, each dispute regarding First Sale Profit Payment Rent and the amount of required insurance coverage shall be considered separate disputes (a "**Separate Dispute**"). While the arbitrator shall have no right to propose a middle ground or any proposed modification of either Statement of Position concerning a Separate Dispute, the arbitrator shall have the right, if the arbitrator so chooses, to choose one party's Statement of Position on one or more of the Separate Disputes, while selecting the other party's Statement of Position on the remaining Separate Disputes. For example, if the parties are unable to agree on the First Sale Profit Payment Rent and the amount of liability insurance coverage, then there shall be two (2) Separate Disputes and the arbitrator shall be permitted to select the Authority's Statement of Position with respect to none, some or all of such two Separate Disputes and select the Lessee's Statement of Position, on the balance, if any, of such two Separate Disputes. Upon the arbitrator's selection of a Statement of Position, pursuant to this Article 16, the Statement of Position so chosen and the award rendered by the arbitrator thereon shall be final and binding upon the parties, absent Gross Error (as defined in Section 16.14.3 below) on the part of the arbitrator.

16.10.2 Nonmonetary Issues. With respect to nonmonetary issues and disputes, the arbitrator shall determine the most appropriate resolution of the issue or dispute, taking into account the Statements of Position submitted by the parties, and shall render an award accordingly. Such award shall be final and binding upon the parties, absent Gross Error on the part of the arbitrator.

16.11 **Powers of Arbitrator**. In rendering the award, the arbitrator shall have the power to consult or examine experts or authorities not disclosed by a party pursuant to Section 16.5.2(2) hereof, provided that each party is afforded the right to cross-examine such expert or rebut such authority.

16.12 **Costs of Arbitration**. Lessee and Authority shall equally share the expenses and fees of the arbitrator, together with other expenses of arbitration incurred or approved by the

arbitrator. Failure of either party to pay its share of expenses and fees constitutes a material breach of such party's obligations hereunder.

16.13 **Amendment to Implement Judgment**. Within seven (7) days after the issuance of any award by the arbitrator becomes final, the Authority will draft a proposed amendment to this Lease setting forth the relevant terms of such award. As long as the amendment accurately sets forth the relevant terms of the award and does not otherwise modify this Lease, Lessee will sign the amendment and return the executed copy to the Authority within seven (7) days after delivery of a copy of the amendment to Lessee. Authority shall thereafter execute the amendment as soon as reasonably practicable.

16.14 **Impact of Gross Error Allegations**. Where either party has charged the arbitrator with Gross Error:

16.14.1The award shall not be implemented if the party alleging Gross Error obtains a judgment of a court of competent jurisdiction stating that the arbitrator was guilty of Gross Error and vacating the arbitration award ("**Disqualification Judgment**"). In the event of a Disqualification Judgment, the arbitration process shall begin over immediately in accordance with this Section 16.14, which arbitration shall be conducted (with a different arbitrator) as expeditiously as reasonably possible.

16.14.2The party alleging Gross Error shall have the burden of proof.

16.14.3For the purposes of this Article 16, the term "**Gross Error**" shall mean that the arbitration award is subject to vacation pursuant to California Code of Civil Procedure § 1286.2 or any successor provision.

16.15 **Notice**.

NOTICE: BY INITIALING IN THE SPACE BELOW YOU ARE AGREEING TO HAVE ANY DISPUTE ARISING OUT OF THE MATTERS INCLUDED IN THE "ARBITRATION OF DISPUTES" PROVISION DECIDED BY NEUTRAL ARBITRATION AS PROVIDED BY CALIFORNIA LAW AND YOU ARE GIVING UP ANY RIGHTS YOU MIGHT POSSESS TO HAVE THE DISPUTE LITIGATED IN A COURT OR JURY TRIAL. BY INITIALING IN THE SPACE BELOW YOU ARE GIVING UP YOUR JUDICIAL RIGHTS TO DISCOVERY AND APPEAL, UNLESS THOSE RIGHTS ARE SPECIFICALLY INCLUDED IN THE "ARBITRATION OF DISPUTES" PROVISION. IF YOU REFUSE TO SUBMIT TO ARBITRATION AFTER AGREEING TO THIS PROVISION, YOU MAY BE COMPELLED TO ARBITRATE UNDER THE AUTHORITY OF THE CALIFORNIA CODE OF CIVIL PROCEDURE. YOUR AGREEMENT TO THIS ARBITRATION PROVISION IS VOLUNTARY.

WE HAVE READ AND UNDERSTAND THE FOREGOING AND AGREE TO SUBMIT DISPUTES ARISING OUT OF THE MATTERS INCLUDED IN THE ARBITRATION OF DISPUTES PROVISION TO NEUTRAL ARBITRATION.

_____ _____

17. **COMPLIANCE WITH APPLICABLE LAWS AND AUTHORITY POLICIES.**

17.1 **Local, State and Federal Laws**.

Lessee shall construct the Improvements and perform all Alterations in conformity with all Laws, including, without limitation, all applicable federal and state labor standards.

17.2 **Non-Discrimination During Construction; Equal Opportunity**.

Lessee, for itself and its successors, assigns and transferees agrees that in the construction of the Improvements and any Alterations provided for in this Lease:

17.2.1 It will not discriminate against any employee or applicant for employment because of race, color, religion, creed, national origin, ancestry, disability, medical condition, age, marital status, domestic partner status, sex, sexual preference/orientation, Acquired Immune Deficiency Syndrome (AIDS) acquired or perceived, or retaliation for having filed a discrimination complaint (nondiscrimination factors). Lessee will take affirmative action to ensure that applicants are employed, and that employees are treated without regard to the nondiscrimination factors during employment including, but not limited to, activities of: upgrading, demotion, or transfer; recruitment or recruitment advertising, layoff or termination; rates of pay or other forms of compensation; and selection for training, including apprenticeship. Lessee agrees to post in conspicuous places, available to employees and applicants for employment, the applicable nondiscrimination clause set forth herein:

17.2.2 It will, ensure that its solicitations or advertisements for employment are in compliance with the aforementioned nondiscrimination factors; and

17.2.3 It will cause the foregoing provisions to be inserted in all contracts for the construction of the Improvements entered into after the Commencements Date and all contracts for construction of Alterations; provided, however, that the foregoing provisions shall not apply to contracts or subcontracts for standard commercial supplies or raw materials.

17.3 **Affirmative Action in Employment and Contracting Procedures, Including Utilization of Minority, Women, and Other Businesses**.

Lessee and Authority acknowledge and agree that it is the policy of Authority to promote and ensure economic advancement of minorities and women as well as other economically disadvantaged persons through employment and in the award of contracts and subcontracts for construction in redevelopment project areas. Lessee shall use commercially reasonable efforts to employ or select employees, contractors and subcontractors possessing the necessary skill, expertise, cost level and efficiency for the development of the Improvements and any Alterations.

17.3.1 Utilization of Minority-Owned, Women-Owned, and Other Businesses (M/W/OBE).

(1) Lessee shall use its best efforts to the greatest extent feasible to seek out and award and require the award of contracts and subcontracts for development of the Project to contracting firms which are located or owned in substantial part by persons residing in the Project Area, and to promote outreach to minority-owned, women-owned and other businesses. This requirement applies to both the construction and operations phases of the Project.

(2) This paragraph shall require the commercially reasonable efforts of Lessee and its contractors, but shall not require the hiring of any person, unless such person has the experience and ability and, where necessary, the appropriate trade union affiliation, to qualify such person for the job.

17.3.2 Utilization of Project Area Residents. The Community Outreach Plan will address the obligations of Lessee regarding the use of residents in and around the Project Area for the labor force for the construction of the Project.

17.3.3 Community Outreach Plan.

(1) Submission of Plan – By the time set forth in the Schedule of Performance, Lessee shall meet with the CRA's Office of Contract Compliance to hold a preconstruction meeting. During the preconstruction meeting, Lessee shall be provided with the policies and procedures of the CRA regarding the MBE, WBE and OBE outreach efforts, including the development of a Community Outreach Plan. Lessee shall be provided samples of Community Outreach Plans which have been approved by the CRA. By the time set forth in the Schedule of Performance and prior to Commencement of Construction of Phase IIB, Lessee shall submit to the CRA Chief Executive Officer or his/her designee, for approval, the Community Outreach Plan for the Project. The Community Outreach Plan shall set forth the methods Lessee will use to comply with this Section 17.3. Upon receipt of the Community Outreach Plan, the CRA shall, within thirty (30) days, approve or disapprove the Community Outreach Plan, or provide to Lessee a statement of actions required to be taken in order for the Community Outreach Plan to be approved. If the CRA fails to respond within such thirty (30) day period, the Community Outreach Plan shall be deemed disapproved by the CRA. Lessee shall not Commence Construction of Phase IIB unless the Community Outreach Plan has been approved by the CRA.

(2) Contents of the Community Outreach Plan - The Community Outreach Plan shall include, at a minimum:

(i) Estimated total dollar amount (by trade) of all contracts and subcontracts to be let by Lessee or its prime contractor for the Improvements;

(ii) List of all proposed M/W/OBEs that will be awarded a contract by Lessee or the prime contractor(s);

(iii) Estimated dollar value of all proposed M/W/OBE contracts;

(iv) Evidence of M/WBE Certification by the City of all firms listed as MBE or WBE in the Community Outreach Plan;

Firms purporting to be M/WBE do not require M/WBE Certification if their contract amount is less than $25,000. Any firm for which the contract amount exceeds $25,000 and which is not certified by the City may not be considered an MBE or WBE for purposes of this Lease.

(v) Description of the actions to be taken to meet the project area resident and business utilization objectives.

(vi) Such other information and documentation with respect to the foregoing objectives as the CRA may reasonably deem necessary.

17.3.4 General Information.

(1) During the construction of the Improvements, Lessee shall provide to the CRA such information and documentation as reasonably requested by the CRA.

(2) Lessee shall monitor and enforce the affirmative outreach and equal opportunity requirements imposed by this Lease. If Lessee fails to monitor or enforce these requirements, Authority may declare Lessee in default of this Lease (subject to the notice and cure rights provided in this Lease) and thereafter pursue any of the remedies available under this Lease.

(3) As requested, Authority shall provide such technical assistance necessary to implement this Section 17.3.

17.4 **Intentionally Omitted**.

17.5 **Intentionally Omitted**.

17.6 **Living Wage; Contractor Program; Service Contractor Policy**.

Unless approved for an exemption by Authority or the CRA, Lessee agrees to comply with the CRA's Living Wage Policy, Contractor Responsibility Program, and Service Contractor Retention Policy attached hereto as Exhibit "B". The CRA shall be responsible for monitoring Lessee's compliance with such policies. The Market Rate Parcel Ground Lease shall provide that the Market Rate Parcel Owner is subject to the Living Wage Policy, Contractor Responsibility Program and Service Contractor Retention Policy as described herein unless approved for an exemption.

17.7 **Affordable Housing.**

At least twenty percent (20%) of the total number of housing units developed on the Premises shall be Affordable Housing Units. All market rate and Affordable Housing Units must be accessed through the same front door, and common ground floor building lobby, and have shared common use of all building common areas (provided the tenants of the Market

Rate Rental Units will be given first priority for use of the parking spaces in the Parking Garage and tenants of the Affordable Housing Units will have off-site parking spaces made available to them pursuant to a parking agreement between Lessee and the Phase IIA Developer). In addition, the Affordable Housing Units must have the same number of bedrooms, proportionately, as the Market Rate Rental Units in the Project.

The Affordable Housing covenants recorded on title to the Premises pursuant to the DDA will remain in effect for 55 years from the date of initial occupancy of Phase IIB. If an Affordable Housing Unit's rent is restricted by a regulatory agreement imposed by the federal Low Income Housing Tax Credit program, the federal Low Income Housing Tax Credit rents shall apply for each Very Low Income Unit, Sixty Percent Household Unit, and Forty Percent Household Unit, as applicable. If an Affordable Housing Unit is not subject to the Low Income Housing Tax Credit program regulations, the Affordable Housing Unit shall be provided, maintained, and made available to residents in a manner consistent with California Redevelopment Law.

Notwithstanding anything to the contrary contained in the DDA, to the extent there is an inconsistency between this Lease and the DDA with respect to the rents that will be charged to tenants of the rental Affordable Housing Units, such tenants shall be charged applicable rents not greater than the maximum allowable rents as calculated and published by the California Tax Credit Allocation Committee.

So long as this Lease is in effect, neither Lessee nor its successors shall sell any Affordable Housing Units as condominium units.

17.8 **Reserved.**

17.9 **CRA Standard Requirements.**

In addition to the policies set forth in this Article 17, Lessee shall comply with the CRA/LA Standard Requirements attached hereto as Exhibit "C" and incorporated herein by this reference as though set forth in full addressing (a) Preferences for Displacees, (b) Contractor Responsibility Policy, (c) Equal Benefits Policy, (d) Management and Marketing Plan, and (e) Affirmative Marketing Requirements; provided, however, that in the event of a conflict between the CRA/LA Standard Requirements attached hereto as Exhibit "C" and this Lease, this Lease shall control.

17.10 **CRA Local Hiring Requirements.**

Lessee shall comply with the CRA's local hiring responsibilities of construction employers on CRA assisted projects and local hiring responsibilities of permanent employers on CRA assisted projects attached hereto as Exhibit "D". Notwithstanding anything to the contrary set forth in this Lease, in the event of a default by Lessee under Exhibit "D", the remedies set forth in Exhibit "D" shall apply and such a default shall not constitute a default under this Lease.

18. **NO DISCRIMINATION.**

18.1 **Obligation to Refrain from Discrimination**.

Lessee covenants by and for itself and any successors in interest that there shall be no discrimination against or segregation of any person or group of persons on account of race, color, religion, creed, national origin, ancestry, sex, sexual preference/orientation, age, marital status, domestic partner status, disability, medical condition, Acquired Immune Deficiency Syndrome (AIDS) -acquired or perceived, or retaliation for having filed a discrimination complaint (nondiscrimination factors) in the construction, sale, lease, sublease, transfer, use, occupancy, tenure or enjoyment of the Premises or the Project, nor shall Lessee itself or any person claiming under or through it establish or permit any such practice or practices of discrimination or segregation with reference to the selection, location, number, use or occupancy of tenants, lessees, subtenants, sublessees, vendees or employees in the Premises or the Project. The foregoing covenants shall run with the land and remain in effect in perpetuity.

18.2 **Form of Nondiscrimination and Nonsegregation Clauses**.

All deeds, leases or other real property conveyance contracts entered into by Lessee on or after the date of execution of this Lease as to any portion of the Premises or the Project shall contain or be subject to substantially the following language:

18.2.1 In deeds or bills of sale: "Grantee herein covenants by and for itself, its successors and assigns, that there shall be no discrimination against or segregation of any person or a group of persons on account of race, color, religion, creed, national origin, ancestry, sex, sexual preference/orientation, age, marital status, domestic partner status, disability, medical condition, Acquired Immune Deficiency Syndrome (AIDS) — acquired or perceived, or retaliation for having filed a discrimination complaint (nondiscrimination factors), in the sale, lease, sublease, transfer, use, occupancy, tenure or enjoyment of the premises herein conveyed, nor shall the grantee, or any person claiming under or through grantee, establish or permit any such practice or practices of discrimination or segregation with reference to the selection, location, number, use or occupancy of tenants, lessees, subtenants, sublessees, vendees or employees in the premises herein conveyed. The foregoing covenant shall run with the land and remain in effect in perpetuity."

18.2.2 In leases: "The lessee herein covenants by and for lessee and lessee's heirs, personal representatives, and assigns, and all persons claiming under or through lessee, and this lease is made subject to the following condition: that there shall be no discrimination against or segregation of any person or group of persons on account of race, color, religion, creed, national origin, ancestry, sex, sexual preference/orientation, age, marital status, domestic partner status, disability, medical condition, Acquired Immune Deficiency Syndrome (AIDS) — acquired or perceived, or retaliation for having filed a discrimination complaint (nondiscrimination factors) in the leasing, subleasing, transferring, use, occupancy, tenure or enjoyment of the premises herein leased, nor shall the lessee, or any person claiming under or through lessee, establish or permit any such practice or practices of discrimination or segregation with reference to the selection, location, number, use or occupancy of tenants, lessees, subtenants, sublessees, vendees or employees in the premises herein leased."

18.2.3 In contracts: "There shall be no discrimination against or segregation of any person or group of persons on account of race, color, religion, creed, national origin, ancestry, sex, sexual preference/orientation, age, marital status, domestic partner status, disability, medical condition, Acquired Immune Deficiency Syndrome (AIDS) — acquired or perceived, or retaliation for having filed a discrimination complaint (nondiscrimination factors), in the sale, lease, sublease, transfer, use, occupancy, tenure or enjoyment of the property, nor shall the transferee, or any person claiming under or through transferee, establish or permit any such practice or practices of discrimination or segregation with reference to the selection, location, number, use or occupancy of tenants, lessees, subtenants, sublessees, vendees or employees of the property."

19. **DEFINITION OF TERMS; INTERPRETATION**.

19.1 **Meanings of Words Not Specifically Defined**. Words and phrases contained herein shall be construed according to the context and the approved usage of the English language, but technical words and phrases, and such others as have acquired a peculiar and appropriate meaning by law, or are defined in Section 1.2, are to be construed according to such technical, peculiar, and appropriate meaning or definition.

19.2 **Tense; Gender; Number; Person**. Words used in this Lease in the present tense include the future as well as the present; words used in the masculine gender include the feminine and neuter and the neuter includes the masculine and feminine; the singular number includes the plural and the plural the singular; the word "**person**" includes a corporation, partnership, limited liability company or similar entity, as well as a natural person.

19.3 **Business Days**. For the purposes of this Lease, "**business day**" shall mean a business day as set forth in Section 9 of the California Civil Code.

19.4 **Parties Represented by Consultants, Counsel**. Both Authority and Lessee have entered this Lease following advice from independent financial consultants and legal counsel of their own choosing. This document is the result of combined efforts of both parties and their consultants and attorneys. Thus, any rule of law or construction which provides that ambiguity in a term or provision shall be construed against the draftsperson shall not apply to this Lease.

19.5 **Governing Law**. This Lease shall be governed by and interpreted in accordance with the laws of the State of California.

19.6 **Reasonableness Standard**. Except where a different standard is specifically provided otherwise herein, whenever the consent of Authority or Lessee is required under this Lease, such consent shall not be unreasonably withheld and whenever this Lease grants Authority or Lessee the right to take action, exercise discretion, establish rules and regulations or make allocations or other determinations, Authority and Lessee shall act reasonably and in good faith. These provisions shall only apply to Authority acting in its proprietary capacity.

19.7 **Memorandum of Lease**. The parties hereto shall execute and acknowledge a Memorandum of Lease, in recordable form and otherwise satisfactory to the parties hereto, for recording as soon as is practicable on or following the Commencement Date.

[Signatures Follow Next Page]

IN WITNESS WHEREOF, Authority and Lessee have entered into this Lease as of the date first above written.

AUTHORITY:

THE LOS ANGELES GRAND
AVENUE AUTHORITY,
a California joint powers authority

By: _____
Name: _____
Title: _____

APPROVED AS TO FORM:

Carmen Trutanich
City Attorney

By: _____
Timothy J. Chung
Deputy City Attorney

APPROVED AS TO FORM:

John F. Krattli
County Counsel

By: _____
Helen S. Parker
Principal Deputy County Counsel

LESSEE:

GRAND AVENUE M HOUSING PARTNERS, LLC,
a California limited liability company

By: Related/Parcel M Development Co., LLC,
a California limited liability company,
its managing member

By: _____
Name: William A. Witte
Title: President

[signatures continued on following page]

The undersigned hereby consents to and approves of the foregoing Phase IIB Ground Lease and agrees to be bound by the terms of Sections 6.8 and 10.1 thereof.

Dated: _____

CRA:

CRA/LA, A DESIGNATED LOCAL AUTHORITY, a public body formed under Health & Safety Code Section 34173(d)(3), as successor to the Community Redevelopment Agency of the City of Los Angeles

By: _____
Christine Essel
Chief Executive Officer

APPROVED AS TO FORM:

GOLDFARB & LIPMAN LLP

By: _____
Thomas Webber
CRA/LA Special Counsel

PHASE IIB GROUND LEASE

by and between

THE LOS ANGELES GRAND AVENUE AUTHORITY

and

GRAND AVENUE M HOUSING PARTNERS, LLC

[_____, 2012]

1. GENERAL TERMS 3
1.1 Lease 3
1.2 Defined Terms. 4

2. TERM 13
2.1 Term 13
2.2 Ownership of Improvements During Term 18
2.3 Reversion of Improvements 18

3. USE OF PREMISES 19
3.1 Specific Primary Use 20
3.2 Prohibited Uses 20
3.3 Active Public Use 21
3.4 Days of Operation 21
3.5 Signs and Awnings 21
3.6 Compliance with Regulations 21
3.7 Reservations 21
3.8 Continued Responsibility for Mitigation Measures 22

4. PAYMENTS TO AUTHORITY. 22
4.1 Net Lease 22
4.2 Lease Consideration 23
4.3 Timing of Lease Consideration Payments. 26
4.4 Payment and Late Fees. 26
4.5 Lessee's Books and Records. 27

5. CONSTRUCTION OF IMPROVEMENTS; ALTERATIONS 27
5.1 Construction of the Phase IIB Improvements. 27
5.2 Application of Remainder of Article 5 27
5.3 Plans and Specifications for Alterations 28
5.4 Conditions Precedent to the Commencement of Construction of Alterations 30
5.5 Manner of Construction 31
5.6 Use of Plans 32
5.7 Reserved 32
5.8 Protection of Authority 32
5.9 Subsequent Renovations 33
5.10 Force Majeure, Enforced Delay, Extension of Time of Performance 34
5.11 Notice of Completion of Alterations. 35

6. CONDEMNATION 35
6.1 Definitions 35
6.2 Parties' Rights and Obligations to be Governed by Lease 35
6.3 Total Taking 35
6.4 Effect of Partial Taking 35
6.5 Effect of Partial Taking on Lease Consideration 36

6.6 Waiver of Code of Civil Procedure Section 1265.130 36
6.7 Payment of Award 36
6.8 Waiver of Right to Condemn 37

7. CERTAIN COVENANTS OF LESSEE 37
7.1 Net Worth 38
7.2 Condominium Conversions. 38

8. INDEMNITY 38

9. INSURANCE 39
9.1 Policy Requirements 39
9.2 General Insurance Requirements 42
9.3 Disbursement of Proceeds 43
9.4 Failure to Maintain Coverage 44

10. MAINTENANCE AND REPAIR; DAMAGE AND DESTRUCTION 44
10.1 Lessee's Maintenance and Repair Obligations 44
10.2 Maintenance Deficiencies 45
10.3 Option to Terminate Under Certain Circumstances 46
10.4 No Option to Terminate for Other Casualty 47
10.5 No Authority Obligation to Make Repairs 47
10.6 Repairs Not Performed by Lessee 47
10.7 Other Repairs 47
10.8 Notice of Damage 47
10.9 Waiver of Civil Code Sections 47
10.10 No Refund of Leasehold Acquisition Fee 48

11. TRANSFERS 48
11.1 Transfer Restrictions and Procedures. 48
11.2 Transfers of Interests in Lessee; Replacement of Related Key Personnel 50
11.3 Subdivision; Transfers After Completion 52
11.4 Common Area Agreement. 55

12. MORTGAGES 56
12.1 Authority Approval Required. 56
12.2 Foreclosure Transfers 56
12.3 Effect of Foreclosure 57
12.4 No Subordination 58
12.5 Mortgagee Protections 59
12.6 New Lease. 61
12.7 Participation in Certain Proceedings and Decisions 62
12.8 Authority's Mortgages and Encumbrances 62
12.9 No Merger 63
12.10 Mortgagee Priority 63

13. DEFAULTS. 63

13.1 Defaults. 63
13.2 Notice of Default. 64
13.3 Time to Cure. 64
13.4 Limitation on Events of Default 64
13.5 Remedies 64
13.6 Damages 66
13.7 Authority's Right to Cure Lessee's Default 66
13.8 Default by Authority 67

14. HAZARDOUS MATERIALS. 67
14.1 Notice to Authority. 67
14.2 Use and Operation of Premises. 67
14.3 Remedial Actions. 67
14.4 Right of Contest. 68
14.5 Environmental Indemnity. 68

15. MISCELLANEOUS. 68
15.1 Quiet Enjoyment 68
15.2 Time is of the Essence 69
15.3 Reserved 69
15.4 Authority Disclosure and Lessee's Waiver 69
15.5 Holding Over 70
15.6 Waiver of Conditions or Covenants 70
15.7 Remedies Cumulative 70
15.8 Authorized Right of Entry 70
15.9 Place of Payment and Filing 71
15.10 Service of Written Notice or Process 71
15.11 Interest73
15.12 Captions 73
15.13 Attorneys' Fees 73
15.14 Amendments 73
15.15 Time For Director Approvals 73
15.16 Time For Authority Action 74
15.17 Estoppel Certificates 74
15.18 Indemnity Obligations 74
15.19 Incorporation By Reference 74

16. ARBITRATION. 74
16.1 Selection of Arbitrator 75
16.2 Arbitrator 75
16.3 Scope of Arbitration 75
16.4 Immunity 75
16.5 Section 1282.2 75
16.6 Statements of Position 77
16.7 Written Appraisal Evidence 77
16.8 Evidence 77
16.9 Discovery 78

16.10 Awards of Arbitrators 78
16.11 Powers of Arbitrator 78
16.12 Costs of Arbitration.....78
16.13 Amendment to Implement Judgment.....79
16.14 Impact of Gross Error Allegations.....79
16.15 Notice 79

17. COMPLIANCE WITH APPLICABLE LAWS AND AUTHORITY POLICIES. 80
17.1 Local, State and Federal Laws. 80
17.2 Non-Discrimination During Construction; Equal Opportunity. 80
17.3 Affirmative Action in Employment and Contracting Procedures, Including Utilization of Minority, Women, and Other Businesses. 80
17.4 Intentionally Omitted. 82
17.5 Intentionally Omitted. 82
17.6 Living Wage; Contractor Program; Service Contractor Policy. 82
17.7 Affordable Housing. 82
17.8 Reserved. 83
17.9 CRA Standard Requirements. 83
17.10 CRA Local Hiring Requirements. 83

18. NO DISCRIMINATION. 83
18.1 Obligation to Refrain from Discrimination. 84
18.2 Form of Nondiscrimination and Nonsegregation Clauses. 84

19. DEFINITION OF TERMS; INTERPRETATION 85
19.1 Meanings of Words Not Specifically Defined 85
19.2 Tense; Gender; Number; Person 85
19.3 Business Days 85
19.4 Parties Represented by Consultants, Counsel 85
19.5 Governing Law 85
19.6 Reasonableness Standard 85
19.7 Memorandum of Lease 85

EXHIBITS AND SCHEDULES

Exhibit "A" Legal Description of Premises
Exhibit "B" Living Wage Policy, Contractor Responsibility Program and Service Contractor Retention Policy
Exhibit "C" CRA/LA Standard Requirements
Exhibit "D" CRA Local Hiring Responsibilities
Exhibit "E" Description of Mitigation Measures
Exhibit "F" Legal Description of Premises (after the Market Rate Transfer)
Exhibit "G" Form of Phase IIB REA
Exhibit "H" First Sale Profit Payment Illustrative Examples

Schedule 1A Affordable Housing Parcels
Schedule 1B Market Rate Parcels

Schedule 2.1.13	Legal Description of Grand Promenade Easement Area and Description of Improvements
Schedule 5.1(A)	Scope of Development
Schedule 5.1(B)	Schedule of Performance

EXHIBIT B

PHASE IIB PARCEL MARKET RATE GROUND LEASE

GROUND LEASE
GRAND AVENUE PROJECT

PHASE IIB – PARCEL M

THIS GROUND LEASE ("**Lease**") is dated as of the [_____ day of _____, 2013**]**, by and between THE LOS ANGELES GRAND AVENUE AUTHORITY, a California joint powers authority ("**Authority**"), as lessor, and GRAND AVENUE M URBAN HOUSING, LLC, a California limited liability company ("**Lessee**"), as lessee.

W I T N E S S E T H

WHEREAS, Authority and Grand Avenue M Housing Partners, LLC, a California limited liability company ("**Affordable Lessee**"), are parties to that certain Disposition and Development Agreement (Grand Avenue) dated as of March 5, 2007 (the "**Original DDA**"), as amended by that certain First Amendment to Disposition and Development Agreement (Grand Avenue) dated as of August 23, 2010 (the "**DDA First Amendment**), that certain Second Amendment to Disposition and Development Agreement (Grand Avenue) dated as of May 31, 2011 (the "**DDA Second Amendment**"), and that certain Third Amendment to Disposition and Development Agreement (Grand Avenue) dated as of [_____, ____] (the "**DDA Third Amendment**"; the Original DDA, as amended by the DDA First Amendment, DDA Second Amendment, and DDA Third Amendment, shall be referred to herein as the "**DDA**") pertaining to the development of certain real property adjacent to the Los Angeles downtown Civic Center and Music Center with retail, hotel, office, and housing (including affordable housing), together with destination urban park uses and remaking of Grand Avenue into active and inviting pedestrian uses (collectively, the "**Grand Avenue Project**");

WHEREAS, CRA/LA, a designated local authority, a public body formed under Health & Safety Code Section 34173(d)(3), as successor to the Community Redevelopment Agency of the City of Los Angeles (the "**CRA**") is the fee owner of certain real property commonly known as "Parcel M-2" of the Redevelopment Plan (the portion more particularly described on Exhibit "A" attached hereto, the "**Market Rate Premises**", and the portion more particularly described on Exhibit "B" attached hereto, the "**Affordable Premises**"; the Affordable Premises and the Market Rate Premises shall be together referred to herein as the "**Project Premises**");

WHEREAS, pursuant to that certain Ground Lease dated as of [_____, ____] between the CRA and the Authority (the "**CRA-Authority Lease**"), the CRA ground leased the Project Premises (including the Market Rate Premises) to the Authority, and pursuant to that certain Ground Lease dated as of [_____, ____] between the Authority and the Affordable Lessee and recorded as Document [_____] in the Official Records of the County of Los Angeles, California (the "**Affordable Premises Ground Lease**"), the Authority sub-ground leased the entire Project Premises (including the Market Rate Premises) to the Affordable Lessee, upon which, pursuant to the DDA, Affordable Lessee has constructed a portion of the Grand Avenue Project referred to herein as "**Phase IIB**" or the "**Project**;"

WHEREAS, Phase IIB includes certain improvements on the Project Premises, consisting of (i) a residential tower of approximately 20 stories, containing 271 rental units, of which 215 are Rental Units contained in the Improvements, (ii) a Parking Garage (as defined in Section 1.2 below) containing approximately 280 parking spaces, and (iii) Retail Improvements (as defined in Section 1.2 below) consisting of an approximately 5,500 square foot indoor restaurant space plus approximately 1,750 square feet of outdoor restaurant patio area (totaling approximately 7,250 square feet of restaurant space) (collectively, the "**Phase IIB Improvements**");

WHEREAS, the Affordable Lessee has completed a subdivision of the Project Premises into multiple air-rights parcels (the "**Subdivision**") through Recordation of a tract map, which was recorded on [_____, ____] as Document [_____] in the Official Records of the County of Los Angeles, California (the "**Map**"), pursuant to which the Affordable Premises and the Market Rate Premises were divided into separate legal parcels. Concurrent with recordation of the Map, the Affordable Lessee, the Lessee, CRA and the Authority entered into a reciprocal easement agreement with covenants and conditions establishing, among other things, easements relating to access between the Affordable Premises and the Market Rate Premises, and certain rights and obligations with respect to ownership and maintenance of the Phase IIB Improvements, which was recorded as Document [_____] in the Official Records of the County of Los Angeles, California (the "**Phase IIB REA**"); and

WHEREAS, all conditions precedent to the Market Rate Transfer (as defined in the Affordable Premises Ground Lease) set forth in the Affordable Premises Ground Lease and in the DDA have been satisfied, Affordable Lessee desires (a) to convey Affordable Lessee's fee interest in the Improvements (as defined in Section 1.2 below) to Lessee, (b) that the Market Rate Premises and any obligations associated therewith shall be released from the Affordable Premises Ground Lease by operation of the provisions thereof, and (c) that the Authority will enter into a sub-ground lease of the Market Rate Premises with the Lessee, which sub-ground lease will provide for the payment of First Sale Profit Payment Rent (as defined below); and

WHEREAS, in order to effect the foregoing transfer, the Authority desires to sublease directly to Lessee, and Lessee desires to sublease directly from the Authority, the Market Rate Premises (which shall also be referred to herein as the "**Premises**"), subject to the terms and conditions set forth herein.

NOW, THEREFORE, in reliance on the foregoing and in consideration of the mutual covenants, agreements and conditions set forth herein, and for other good and valuable consideration, the receipt and sufficiency of which is hereby acknowledged, the parties hereto and each of them do agree on the following:

20. **GENERAL TERMS**.

20.1 **Lease**. For and in consideration of the payment of consideration and the performance of all the covenants and conditions of this Lease, Authority hereby subleases to Lessee, and Lessee hereby subleases and hires from Authority, an exclusive right to possess and use, as subtenant, the Premises for the Term (as defined in Section 2.1 below), upon the terms and conditions and subject to the requirements set forth herein.

20.1.1 As-Is. Lessee accepts the Premises in their present condition notwithstanding the fact that there may be certain defects in the Premises, whether or not known to either party to this Lease, at the time of the Commencement Date (as defined in Section 2.1 below), and Lessee hereby represents that it has performed all investigations necessary, including without limitation soils and engineering inspections, in connection with its acceptance of the Premises "AS IS, WHERE IS, AND WITH ALL FAULTS". Lessee hereby accepts the Premises on an "AS IS, WHERE IS, AND WITH ALL FAULTS" basis and, except as expressly set forth in this Lease, Lessee is not relying on any representation or warranty of any kind whatsoever, express or implied, from Authority or any of the other Governing Entities or their respective agents or employees, as to any matters concerning the Premises and/or any Existing Improvements (as defined in Section 2.2 below) located thereon, including without limitation: (i) the quality, nature, adequacy and physical condition and aspects of the Premises and/or any Existing Improvements located thereon, including, but not limited to, the structural elements, foundation, erosion, appurtenances, access, landscaping, parking facilities and the electrical, mechanical, plumbing, sewage and utility systems, facilities and appliances, including the presence or absence of any latent or patent condition thereon or therein, and the square footage of the land and the Existing Improvements, (ii) the quality, nature, adequacy and physical condition of soils, geology and any groundwater, including any Hazardous Materials (as defined in Section 1.2 below) thereon or therein; (iii) the existence, quality, nature, adequacy and physical condition of utilities serving the Premises and/or any Existing Improvements located thereon, (iv) the development potential of the Premises, and the use, habitability, merchantability or fitness, or the suitability, value or adequacy of the Premises and/or any Existing Improvements located thereon for any particular purpose, (v) the zoning or other legal status or entitlement or lack thereof of the Premises or any other public or private restrictions on use of the Premises, (vi) the compliance of the Premises and/or any Existing Improvements located thereon with any applicable Laws (including, without limitation, relevant provisions of the Americans with Disabilities Act), (vii) the presence of any underground storage tank or Hazardous Materials on, under or about the Premises or the adjoining or neighboring property, (viii) the quality of any labor and materials used in any Existing Improvements, (ix) the condition of title to the Premises, and (x) the economics of the operation of the Premises and/or any Existing Improvements located thereon. Lessee waives any right of reimbursement or indemnification from Authority for Lessee's costs related to any physical conditions on the Premises. This waiver shall survive termination of this Lease.

20.1.2 Title. Authority represents that Authority holds a leasehold interest in and to the Premises pursuant to the CRA-Authority Lease and that Authority has the right to sublease the Premises to Lessee pursuant to this Lease. Lessee hereby acknowledges the interest of Authority in and to the Premises, and covenants and agrees never to contest or challenge the extent of said interest, except as is necessary to ensure that Lessee may occupy the Premises and/or encumber the leasehold estate pursuant to the terms and conditions of this Lease. The Authority, CRA and Lessee have entered into a Sublessee's Non-disturbance and Ground Lease Recognition Agreement dated of even date herewith (the "**CRA-Authority Market Rate Lease NDA**"), and Authority hereby approves recordation of the same against Authority's leasehold interest in the Premises.

20.1.3 Covenant Not to Encumber Title. Lessee covenants and agrees that it has no right or power to subject the interest of the Authority or the CRA in the Premises to any liens arising from or related to Lessee's interest in, or occupancy, use, or sublease of, the Premises, including without limitation any lien or mortgage of any Mortgagee or other creditor of Lessee, including any lender providing financing for all or any portion of the Premises. Notwithstanding the foregoing, the CRA and Authority have approved the recordation of the CRA-Authority Market Rate Lease NDA against the CRA's fee title interest in the Premises and the Authority's leasehold interest in the Premises.

20.2 **Defined Terms.** As used in this Lease, the following terms shall have the meanings set forth below:

"**Actual Cost**" means the reasonable cost and expenses incurred by Authority with respect to a particular activity or procedure, including without limitation (i) expenditures to third party legal counsel, financial and other consultants and advisors, and (ii) costs incurred in connection with appraisals.

"**Affiliate**" means any corporation, partnership, limited liability company or other organization or entity which is majority-owned and controlled by, controlling or under common control with (directly or indirectly) Lessee.

"**Affordable Lessee**" shall have the meaning set forth in the first Recital of this Lease.

"**Affordable Premises**" shall have the meaning set forth in the second Recital of this Lease.

"**Affordable Premises Ground Lease**" shall have the meaning set forth in the third Recital of this Lease.

"**Alterations**" shall have the meaning set forth in Section 5.2.

"**Applicable Rate**" means an annually compounded rate of interest equal to the lesser of (a) ten percent (10%) per annum or (b) the Reference Rate, as hereinafter defined, plus three percent (3%) per annum; however, the Applicable Rate shall in no event exceed the maximum rate of interest which may be charged pursuant to applicable Laws. If the Applicable Rate as determined by the first sentence of this definition exceeds such maximum rate of interest,

then the Applicable Rate shall be deemed the maximum rate permissible under applicable Laws notwithstanding the first sentence of this definition.

"**Authority**" shall have the meaning set forth in the first paragraph of this Lease.

"**Authority Indemnified Parties**" shall have the meaning set forth in Article 8.

"**Award**" shall have the meaning set forth in Section 6.1.3.

"**Bankruptcy/Dissolution Event**" with respect to a person or entity, means the commencement or occurrence of any of the following with respect to such person or entity: (1) a case under Title 11 of the U.S. Code, as now constituted or hereafter amended, or under any other applicable federal or state bankruptcy law or other similar law; (2) the appointment of (or a proceeding to appoint) a trustee or receiver of any property interest; (3) an attachment, execution or other judicial seizure of (or a proceeding to attach, execute or seize) a substantial property interest; (4) an assignment for the benefit of creditors; (5) the taking of, failure to take, or submission to any action indicating (after reasonable investigation) an inability to meet its financial obligations as they accrue; or (6) a dissolution or liquidation; provided, however, that the events described in clauses (1), (2) or (3) shall not be included if the same are (a) involuntary and not at any time consented to, (b) contested within 30 days of commencement and thereafter diligently and continuously contested, and (c) dismissed or set aside, as the case may be, within 120 days of commencement.

"**City**" means the City of Los Angeles, a charter city and municipal corporation duly organized and existing under the Constitution and laws of the State of California.

"**Commencement Date**" shall have the meaning set forth in Section 2.1.

"**Condemnation**" shall have the meaning set forth in Section 6.1.1.

"**Condemnor**" shall have the meaning set forth in Subsection 6.1.4.

"**Control**" means the possession, directly or indirectly, of the power to direct or cause the direction of the management or policies of an entity or person, whether through the ability to exercise voting power, by contract or otherwise.

"**County**" means the County of Los Angeles.

"**CPI**" means the Consumer Price Index--All Urban Consumers for Los Angeles-Riverside-Orange County, as published from time to time by the United States Department of Labor or, in the event such index is no longer published or otherwise available, such replacement index as may be agreed upon by Authority and Lessee.

"**CRA**" means CRA/LA, a designated local authority, a public body formed under Health & Safety Code Section 34173(d)(3), as successor to the Community Redevelopment Agency of the City of Los Angeles, and its successors and assigns as fee title owner of the Premises.

"**CRA-Authority Lease**" shall have the meaning set forth in the third Recital of this Lease.

"**CRA-Authority Market Rate Lease NDA**" shall have the meaning set forth in Section 1.1.2.

"**Cure Period**" shall have the meaning set forth in Section 13.3.

"**Date of Taking**" shall have the meaning set forth in Section 6.1.2.

"**DDA**" shall have the meaning set forth in the first Recital of this Lease.

"**Director**" shall mean the officer designated by the Authority to administer this Lease.

"**Disqualification Judgment**" shall have the meaning set forth in Section 16.14.1.

"**Events of Default**" shall have the meaning set forth in Section 13.1.

"**Excluded Defaults**" shall have the meaning set forth in Section 12.3.3.

"**Existing Improvements**" shall have the meaning set forth in Section 2.2(a).

"**Extended Time**" shall have the meaning set forth in Section 15.15.

"**Final Plans and Specifications**" shall have the meaning set forth in Section 5.3.3.

"**Force Majeure**" shall have the meaning set forth in Section 5.10.

"**Foreclosure Transfer**" shall have the meaning set forth in Section 12.2.1.

"**Foreclosure Transferee**" shall have the meanings set forth in Section 12.2.1.

"**Governing Entities**" means the Authority, the CRA, the County and the City.

"**Grand Avenue Project**" shall have the meaning set forth in the first Recital of this Lease.

"**Gross Error**" shall have the meaning set forth in Section 16.14.3.

"**Hazardous Materials**" shall include without limitation:

(i) Those substances included within the definitions of "hazardous substances", "Hazardous Materials", "toxic substances", or "solid waste" in the Comprehensive Environmental Response Compensation and Liability Act of 1980 (42 U.S.C. §§ 9601 et seq.) ("**CERCLA**"), as amended by Superfund Amendments and Reauthorization Act of 1986 (Pub. L. 99-499 100 Stat. 1613) ("**SARA**"), the Resource Conservation and Recovery Act of 1976 (42 U.S.C. §§6901 et seq.) ("**RCRA**"), and the Hazardous Materials Transportation Act, 49 U.S.C.

§§ 1801 et seq., and in the regulations promulgated pursuant to said laws, all as amended;

(ii) Those substances listed in the United States Department of Transportation Table (49 CFR 172.101 and amendments thereto) or by the Environmental Protection Authority (or any successor authority) as hazardous substances (40 CFR Part 302 and amendments thereto);

(iii) Any material, waste or substance which is (A) petroleum, (B) asbestos, (C) polychlorinated biphenyls, (D) designated as a "hazardous substance" pursuant to Section 311 of the Clean Water Act, 33 U.S.C. §§ 1251 et seq. (33 U.S.C. §§1321) or listed pursuant to Section 307 of the Clean Water Act (33 U.S.C. §§ 1317); (E) flammable explosives; or (F) radioactive materials;

(iv) Any toxic or hazardous waste, material or substance or any oil or pesticide listed in, covered by, or regulated pursuant to, any state or local law, ordinance, rule or regulation applicable to the Premises, as heretofore or hereafter amended; and

(v) Such other substances, materials and wastes which are or become regulated as hazardous or toxic under applicable local, state or federal law, or the United States government, or which are classified as hazardous or toxic under federal, state, or local laws or regulations.

"**Hazardous Materials Laws**" means environmental and health and safety laws, regulations, ordinances, administrative decisions, common law decisions (whether federal, state, or local) with respect to Hazardous Materials, including those relating to soil and groundwater conditions.

"**Improvements**" means all above or below ground buildings, structures, fixtures, fences, walls, fountains, paving, parking areas, driveways, walkways, plazas, landscaping, permanently affixed utility systems and other improvements now or hereafter located on the Premises (including, without limitation, the 215 Rental Units, the Retail Improvements, the Parking Garage, and one hundred percent (100%) of the common areas and other public spaces of the Phase IIB Improvements).

"**Income Approach**" shall have the meaning set forth in Section 6.7.1.

"**Initiating Party**" shall have the meaning set forth in Article 16.

"**Institutional Lender**" means any Mortgagee that is a commercial bank, savings bank, savings and loan institution, insurance company, pension fund, investment bank, opportunity fund, mortgage conduit, real estate investment trust, commercial finance lender or other similar financial institution that ordinarily engages in the business of making, holding or servicing commercial real estate loans, including any affiliate thereof, with at least $1 Billion of assets and at least $500 Million of tangible net worth for a Mortgagee of the Improvements. Notwithstanding anything to the contrary in this definition, STRS shall be deemed to be an Institutional Lender for the purposes of this Lease.

"**Late Fee**" shall have the meaning set forth in Section 4.4.

"**Laws**" means all procedural and substantive federal, state and local laws, moratoria, initiatives, referenda, ordinances, rules, regulations, standards, orders and other governmental requirements (including those relating to the environment, health and safety or handicapped persons, and those imposed by Authority), applicable to all or any portion of the Premises, or the ownership, use, operation, maintenance, sale, lease or other disposition thereof, or to the development and construction of the Premises and the Improvements, including all permits, licenses, approvals, entitlements, variances, exemptions, and other governmental authorizations applicable to the ownership, development, construction, use, operation or maintenance of all or any portion of the Premises, including any development agreement, indemnity, surety or performance bond or other similar assurances to governmental agencies in connection with the obtaining of entitlements and other governmental approvals for the Premises. The Laws include the Hazardous Materials Laws and the Grand Avenue Project Mitigation & Regulatory Measures, Project Design Features and Conditions of Approval applicable to the Project.

"**Lease**" shall mean this Ground Lease.

"**Lease Consideration**" shall have the meaning set forth in Section 4.2.

"**Leasehold Acquisition Fee**" shall have the meaning set forth the Affordable Premises Ground Lease.

"**Lessee**" shall have the meaning set forth in the first paragraph of this Lease.

"**Letter of Credit**" shall mean that certain irrevocable standby letter of credit issued by Bank of America, N.A. in the amount of [$21,000,000] securing repayment of a portion of the Senior Loan.

"**Map**" shall have the meaning set forth in the fifth Recital of this Lease.

"**Market Rate Premises**" shall have the meaning set forth in the second Recital of this Lease.

"**Market Rate Premises Documents**" shall mean this Lease, the Phase IIB REA, and the Public Plaza REA.

"**Minimum Net Worth**" shall have the meaning set forth in Section 7.1.1.

"**Mortgage**" means any mortgage, deed of trust, pledge, encumbrance or other security interest, together with all amendments, modifications, supplements, restatements and/or replacements from time to time, granted to a lender not Affiliated with Lessee, made in good faith and for fair value, encumbering all or any part of Lessee's interest in this Lease, the DDA, the Project Documents, the Improvements or the Premises. "Mortgage" shall not include any mortgage, deed of trust, pledge, encumbrance or other security interest granted to a lender (i) in which Lessee or an Affiliate of Lessee has an interest of 20% or more, or (ii) which has an interest of 20% or more in Lessee or an Affiliate of Lessee. Notwithstanding the foregoing, the deed of trust securing repayment of the Letter of Credit shall constitute a Mortgage hereunder.

"**Mortgagee**" means any mortgagee, beneficiary under any deed of trust, trustee of any bonds, and, if the Premises is the subject of a sale-leaseback transaction, the person acquiring fee title to the Premises.

"**Net Awards and Payments**" shall have the meaning set forth in Section 6.7.

"**Notice of Completion**" shall have the meaning set forth in Section 5.11.

"**Notice of Default**" shall have the meaning set forth in Section 13.2.

"**Offsite Publicly Owned Improvements**" means the public improvements for areas outside of the Premises that are required to maintained by Lessee and that are described on Schedule 1.2 attached hereto.

"**Parking Garage**" means a parking facility containing approximately 280 parking spaces for renters of the Rental Units.

"**Partial Taking**" shall have the meaning set forth in Section 6.1.6.

"**Payment Bond**" shall have the meaning set forth in Section 5.4.3(2).

"**Performance Bond**" shall have the meaning set forth in Section 5.4.3(1).

"**Permitted Uses**" shall have the meaning set forth in Section 3.1.

"**Phase IIB**" shall have the meaning set forth in the third Recital of this Lease.

"**Phase IIB Improvements**" shall have the meaning set forth in the fourth Recital of this Lease.

"**Phase IIB REA**" shall have the meaning set forth in the fifth Recital of this Lease.

"**Premises**" shall mean the real property described on Exhibit "A" attached to this Lease (i.e., the Market Rate Premises).

"**Project**" shall have the meaning set forth in the third Recital of this Lease.

"**Project Area**" means the Bunker Hill Redevelopment Project Area.

"**Project Premises**" shall have the meaning set forth in the second Recital of this Lease.

"**Public Plaza REA**" shall mean the agreement meeting the requirements for the "Public Plaza REA" set forth in the DDA Third Amendment, dated [_____] and recorded on [_____] as Document [_____] in the Official Records of the County of Los Angeles, California.

"**Qualified Owner**" shall have the meaning set forth in Section 11.3.

"**Recordation**" means recordation in the Official Records of the County of Los Angeles, California.

"**Redevelopment Plan**" means that certain Redevelopment Plan for the Bunker Hill Redevelopment Project Area in the City of Los Angeles, State of California, which was approved and adopted by the City Council by Ordinance No. 113,231 on March 31, 1959; amended January 12, 1968 by Ordinance No. 135,900; and amended June 25, 1970, by Ordinance No. 140,662.

"**Reference Rate**" means the prime rate of interest or other equivalent reference rate from time to time announced by the Bank of America National Trust and Savings Association (or if Bank of America National Trust and Savings Association ceases to exist or ceases to announce a prime or reference rate, then the prime or reference rate announced from time to time by the largest California state chartered bank in terms of assets).

"**Related**" shall have the meaning set forth in Section 11.1.1.

"**Release**" means any spilling, leaking, pumping, pouring, emitting, emptying, discharging, injecting, escaping, leaching, dumping, or disposing into the environment (including the abandonment or discarding of barrels, containers, and other closed receptacles containing any Hazardous Materials).

"**Renovation Standard**" shall have the meaning set forth in Section 5.9.

"**Rental Units**" means the rental housing units in the Improvements.

"**Reply**" shall have the meaning set forth in Section 16.5.

"**Responding Party**" shall have the meaning set forth in Article 16.

"**Retail Improvements**" means approximately 5,500 square foot indoor restaurant space plus approximately 1,750 square feet of outdoor restaurant patio area (totaling approximately 7,250 square feet of restaurant space).

"**Section**" shall mean a section of this Lease.

"**Senior Loan**" means that certain loan from the City of Los Angeles to the Lessee in the original principal amount of [$_____], which loan was made by the City of Los Angeles with the proceeds from the issuance of tax exempt mortgage revenue notes to Citibank, N.A., and which is partially secured by the Letter of Credit.

"**Shall**" and "**will**" are mandatory and the word "**may**" is permissive.

"**State**" means the State of California.

"**Statement of Position**" shall have the meaning set forth in Section 16.6.

"**STRS**" means STRS Ohio CA Real Estate Investments II, LLC, a Delaware limited liability company, or any successor or assign thereof.

"**Subdivision**" shall have the meaning set forth in the fifth Recital of this Lease.

"**Subsequent Renovation**" shall have the meaning set forth in Section 5.9.

"**Subsequent Renovation Plan**" shall have the meaning set forth in Section 5.9.

"**Sublease**" means any lease, license, permit, concession or other interest in the Premises, or a right to use the Premises or a portion thereof, which is conveyed or granted by Lessee to a third party, and which constitutes less than the unrestricted conveyance of the entire Lessee's interest under this Lease.

"**Sublessee**" means the person or entity to whom such right to use is conveyed by a Sublease.

"**Temporary Taking**" shall have the meaning set forth in Subsection 6.1.7.

"**Term**" shall have the meaning set forth in Section 2.1.

"**Title Company**" shall mean [Old Republic Title Company,] or any other title insurance company selected by Lessee.

"**Transfer**" shall have the meaning set forth in Section 11.1.2(1).

"**Total Taking**" shall have the meaning set forth in Subsection 6.1.5.

"**Uninsured Loss**" shall have the meaning set forth in Section 10.3.

"**Written Appraisal Evidence**" shall have the meaning set forth in Section 16.7.

21. **TERM**.

21.1 **Term**. The term of this Lease (the "**Term**") shall commence upon the full execution and approval of this Lease by the Governing Entities (which shall be conditioned upon, among other things, Lessee having submitted evidence of its compliance with Authority's insurance requirements, as set forth in Article 9 of this Lease) (the "**Commencement Date**"). The Term shall continue until and expire at 11:59 p.m. on the date which is ninety-nine (99) years less two (2) days from the "Commencement Date" of the Affordable Premises Ground Lease (as established pursuant to the terms thereof, it being the intent of the parties that this Lease and the Affordable Premises Ground Lease initially be coterminous), unless terminated sooner in accordance with the provisions of this Lease. Promptly on request by either party, the parties shall confirm the Commencement Date and expiration date of this Lease in a written memorandum that is recorded in the Official Records of Los Angeles County.

21.2 **Ownership of Improvements During Term**. Until the expiration of the Term or sooner termination of this Lease, and except as specifically provided herein, Lessee shall own fee

title to all at grade, above grade and below grade structures, buildings, improvements, additions, alterations, and betterments of whatsoever nature or description, including without limitation concrete foundations, pilings, walkways, and pavement now existing (the "**Existing Improvements**") and all Improvements hereafter constructed by or on behalf of Lessee upon the Premises. It is the purpose and intent of the Authority and Lessee that Lessee shall be accorded all the burdens and benefits of ownership of the Improvements throughout the Term. Accordingly, at all times during the Term, Lessee shall be deemed to exclusively own the Improvements for federal tax purposes, and Lessee alone shall be entitled to all of the tax attributes of ownership thereof including, without limitation, the right to claim depreciation or cost recovery deductions and the right to amortize capital costs and to claim any other federal tax benefits attributable to the Improvements. No Improvements shall be demolished or removed from the Premises during or at the expiration or earlier termination of the Term of this Lease, except in connection with subsequent Alterations performed in accordance with the provision of Article 5 of this Lease.

21.3 **Reversion of Improvements**. Upon the expiration of the Term or sooner termination of this Lease, whether by cancellation, forfeiture or otherwise:

21.3.1 Authority's Receipt of Improvements. All Improvements then existing on the Premises shall remain upon and be surrendered with the Premises as part thereof and title thereto shall vest in Authority without compensation therefor to Lessee. Lessee shall not be responsible for any removal by an easement holder of any Improvements that may be owned by and constructed on the Premises by such easement holder pursuant to an easement granted to such easement holder by Authority. Nothing contained herein shall be construed to deny or abrogate the right of Lessee, prior to the expiration of the Term or termination of this Lease, to receive any and all proceeds attributable to the Condemnation (as defined in Section 6.1.1 below) of business installations or Improvements belonging to Lessee immediately prior to the taking of possession by the Condemnor as said rights are set forth in Article 6 of this Lease, or to remove any furniture or equipment not intended to be permanently affixed to, or reasonably necessary for the operation of, the Premises, any signage identifying Lessee or a Sublessee (as opposed to other signage used in the operation of the Premises and associated Improvements), or any personal property, upon the expiration of the Term or earlier termination of this Lease, subject to Lessee's obligations under this Lease to use the Premises for the Permitted Uses (as defined in Section 3.1 below). In addition, nothing contained herein shall be construed to deny a Sublessee any right that such Sublessee may have under its Sublease to remove any so-called Sublessee "trade-dress" items installed in or on the subleased premises by such Sublessee. Lessee shall be responsible for repairing (or causing its Sublessees to repair) any damage to the Improvements on the Premises incurred in connection with the removal from the Premises of any of the items described in this Section 2.3.1.

21.3.2 Reserved.

21.3.3 Reserved.

21.3.4 Duty to Remove Equipment, Etc. No later than the expiration of the Term or sooner termination of this Lease, Lessee shall remove at its cost and expense such furniture, equipment and personal property as are owned by Lessee and not firmly affixed to said

Improvements or reasonably necessary for the orderly operation of the Premises. The items removed shall not include operating equipment for the parking improvements, which equipment shall not be removed. Should Lessee fail to so remove said furniture, equipment and personal property within said period, and said failure continues for ten (10) days after written notice from Authority to Lessee, Lessee shall lose all right, title and interest in and thereto, and Authority may elect to keep the same upon the Premises or to sell, remove, or demolish the same, in event of which sale, removal, or demolition Lessee shall reimburse Authority for its Actual Cost incurred in connection with such sale, removal or demolition in excess of any consideration received by Authority as a result of said sale, removal or demolition.

21.3.5 Title to Certain Improvements Passes to Authority; Lessee to Maintain. By way of clarification, as between Authority and Lessee, title to all utility lines, transformer vaults and all other utility facilities constructed or installed by Lessee upon the Premises shall vest in Authority upon construction or installation to the extent that they are not owned by a utility. Notwithstanding the foregoing sentence, as between Lessee and Authority, Lessee shall be responsible for performing (or causing the appropriate utility provider to perform) the maintenance, repair and replacement, if and as needed, of such utility lines, transformer vaults and all other utility facilities during the Term.

22. **USE OF PREMISES**.

22.1 **Specific Primary Use**. The Premises shall be used by Lessee for the repair, maintenance, operation and management of the Improvements (including, without limitation, the 215 Rental Units, the Retail Improvements, the Parking Garage, and one hundred percent (100%) of the common areas and other public spaces of the Phase IIB Improvements) (collectively, the foregoing shall be referred to herein as the "**Permitted Uses**"), and such other related and incidental uses as are specifically approved by Authority, which approval shall not be unreasonably withheld, conditioned or delayed by Authority as long as such other related or incidental use is consistent with the Permitted Uses. Except as expressly provided herein, the Premises shall not be used for any purpose other than the Permitted Uses, without the prior written consent of Authority in its sole discretion. Authority makes no representation or warranty regarding the continued legality of the Permitted Uses or any of them, and Lessee bears all risk of an adverse change in Laws.

22.2 **Prohibited Uses**. Notwithstanding the foregoing:

22.2.1 Nuisance. Lessee shall not conduct or permit to be conducted any private or public nuisance on or about the Premises, nor commit any waste thereon. No rubbish, trash, waste, residue, brush, weeds or undergrowth or debris of any kind or character shall ever be placed or permitted to accumulate upon any portion of the Premises, except in appropriate receptacles intended for such purposes, nor shall any portion of the Premises be maintained so as to render said Premises a fire hazard or unsanitary, unsightly, offensive, or detrimental nor shall any similar activity be permitted on any other portion of the Premises or on any adjacent public street or adjacent property.

22.2.2 Restrictions and Prohibited Uses. Without expanding upon or enlarging the Permitted Uses of the Premises as set forth in this Lease, the following uses of the Premises are expressly prohibited:

(1) The Premises shall not be used or developed in any way which is inconsistent with any Laws;

(2) The Premises shall not be used or developed in any way in a manner inconsistent with the Permitted Uses. Without limiting the foregoing, no part of the Premises shall be used by any person for any adult entertainment purposes, as such term refers to graphic, explicit and/or obscene depictions of sexual activity;

(3) No Improvement on the Premises shall be permitted to fall into disrepair and all Improvements shall at all times be kept in good condition and repair consistent with the requirements of Section 10.1 of this Lease;

(4) No condition shall be permitted to exist upon the Premises which shall induce, breed or harbor infectious plant diseases, rodents, or noxious insects and Lessee shall take such measures as are appropriate to prevent any conditions from existing on the Premises which create a danger to the health or safety of any persons residing or working at, or persons patronizing, the Premises; this Subsection 3.2.2(4) shall not be construed to prevent Lessee from using the Premises for normal restaurant operations, provided that Lessee takes (or causes to be taken) all actions or measures required to comply with this Subsection 3.2.2(4);

(5) Without the prior written approval of Director, no antennae or other device for the transmission or reception of television signals or any other form of electromagnetic radiation shall be erected, used or maintained by Lessee outdoors above ground on any portion of the Premises, whether attached to an Improvement or otherwise. Director will approve the installation of one or more satellite antennae on the roof of the Improvements as long as such antennae comply with Laws, do not extend above the roofline or parapet at the top of the building perimeter, are screened from view in a manner acceptable to Director and do not interfere with other electromagnetic transmission;

(6) No tools, equipment, or other structure designed for use in boring for water, oil, gas or other subterranean minerals or other substances, or designed for use in any mining operation or exploration, shall hereafter be erected or placed upon or adjacent to the Premises, except as is necessary to allow Lessee to perform its maintenance and repair obligations pursuant to this Lease;

(7) Lessee shall not use the Premises or allow the Premises to be used for the generation, manufacture, storage, disposal, or Release of Hazardous Materials, except for the storage and use, in customary amounts, of normal cleaning supplies and other items that are generally used in connection with the construction and operation of improvements similar to the Grand Avenue Project, so long as such materials are used and stored in accordance with Hazardous Materials Laws; and

(8) The Premises shall not be used for fuel sales.

22.3 **Active Public Use**. Lessee agrees and covenants that it will operate the Premises fully and continuously (other than during periods when Lessee is prevented from doing so due to Force Majeure (as defined in Section 5.10 below) or reasonable periods during which the applicable Improvements are under construction or alteration) consistent with the operation of top quality retail and/or restaurant establishments, and top quality high rise rental units.

22.4 **Days of Operation**. The Improvements on the Premises shall be open every day of the year; provided, however, that businesses operated by Sublessees or by Lessee shall not be obligated to remain open for business to the public on holidays or other days on which other comparable facilities are closed for business.

22.5 **Signs and Awnings**. Any and all art, displays, identifications, monuments, awnings, advertising signs and banners which are placed on, or are visible from, the exterior of the Premises, shall be in compliance with all Laws applicable to the Premises.

22.6 **Compliance with Regulations**. Lessee shall comply with all Laws and shall pay for and maintain any and all licenses and permits related to or affecting the use, operation, maintenance, repair or improvement of the Premises.

22.7 **Reservations**. Lessee expressly agrees that this Lease and all rights hereunder shall be subject to all prior encumbrances, reservations, licenses, easements and rights of way in, to, over or affecting the Premises for any purpose whatsoever that are existing as of the date hereof and that either (i) are of record, (ii) have been disclosed to Lessee in writing or are otherwise known to Lessee, (iii) would be apparent or discoverable by an ALTA survey of the Premises, or (iv) are otherwise referenced in this Lease. Without limiting the foregoing, Lessee expressly agrees that this Lease and all rights hereunder shall be subject to the rights of the Governing Entities existing as of the Commencement Date or otherwise disclosed to or known to Lessee, as their interests may appear, to install, construct, maintain, service and operate sanitary sewers, public roads and sidewalks, fire access roads, storm drains, drainage facilities, electric power lines, telephone lines and access and utility easements, across, upon or under the Premises, together with the right of the Governing Entities to convey such easements or other access or utility easements of any and all manner and description currently in use or to be discovered, invented, or developed in the future, and transfer such rights to others.

22.8 **Continued Responsibility for Mitigation Measures**. Lessee shall be responsible for compliance with the Project description as approved in the final EIR, the Mitigation and Monitoring Program approved as part of the certification of the EIR, and related conditions of approval adopted by the Governing Entities with respect to Phase IIB concurrently with approval of the Original DDA as set forth in Exhibit "F" attached hereto.

23. **PAYMENTS TO AUTHORITY.**

23.1 **Net Lease**. The parties acknowledge that the payments to be made by Lessee under this Lease are intended to be absolutely net to Authority. The Lease Consideration and other sums to be paid to Authority hereunder are not subject to any demand, set-off or other withholding. Authority shall not be responsible for any capital or non-capital costs, including without limitation, repairs or replacements respecting the Premises or Improvements (whether

structural or non-structural), operating expenses attributable to the operation and maintenance of the Premises or Improvements, including without limitation the parking areas included within the Premises, costs for utilities or services, or any other costs or expenses pertaining to the ownership, occupancy or use of the Premises and Improvements, all of which shall be the sole responsibility of Lessee from and after the Commencement Date.

23.1.1 Utilities. In addition to the Lease Consideration as herein provided, Lessee shall pay all utility and service charges for furnishing water, power, sewage disposal, light, telephone service, garbage and trash collection and all other utilities and services, to the Premises, from and after the Commencement Date.

23.1.2 Taxes and Assessments. From and after the Commencement Date, Lessee agrees to pay before delinquency all taxes, assessments, fees, or charges which at any time may be levied by the State, County, City or any tax or assessment levying body upon any interest in this Lease or any possessory right which Lessee may have in or to the Premises covered hereby or to the Improvements thereon for any reason, as well as all taxes, assessments, fees, and charges on goods, merchandise, fixtures, appliances, equipment, and property owned by Lessee in, on or about the Premises. Lessee shall have the right to contest the amount of any assessment imposed against the Premises or the possessory interest therein; provided, however, the entire expense of any such contest (including interest and penalties which may accrue in respect of such taxes) shall be the responsibility of Lessee.

The parties acknowledge that the Premises are and shall be subject to possessory interest taxes, and that such taxes shall be paid by Lessee, as the party in which the possessory interest is vested. This statement is intended to comply with Section 107.6 of the Revenue and Taxation Code. Lessee shall include a statement in all Subleases (excluding Subleases for individual residential units) to the effect that the interests created therein may also be subject to possessory interest taxes, and that the Sublessee shall be responsible for any and all possessory interest taxes on the Sublessee's interest; however, Lessee acknowledges that the payment of such possessory interest taxes is the ultimate responsibility of Lessee.

The parties further acknowledge that Lessee shall pay taxes upon the assessed value of the entire property and not merely the assessed value of its leasehold interest, in compliance with California Health & Safety Code Section 33673, which provides in pertinent part that "[w]henever property in any redevelopment project has been redeveloped and thereafter is leased by the redevelopment agency to any person or persons or whenever the agency leases real property in any redevelopment project to any person or persons for redevelopment, the property shall be assessed and taxed in the same manner as privately owned property, and the lease or contract shall provide that the lessee shall pay taxes upon the assessed value of the entire property and not merely the assessed value of his or its leasehold interest."

23.2 **Lease Consideration**. For the possession and use of the Premises granted herein, Lessee shall pay the Authority the First Sale Profit Payment Rent (as hereinafter defined). The First Sale Profit Payment Rent is also referred to herein as the "**Lease Consideration**." The First Sale Profit Payment Rent and all other sums due under this Lease are referred to collectively in this Lease as "**rent**."

23.2.1 Reserved.

23.2.2 As "**First Sale Profit Payment Rent**", Lessee shall pay to Authority, upon the first Sale of the Improvements, fifty percent (50%) of the Net Sale Profits. For the purpose of illustration and clarification, Exhibit "G" attached hereto sets forth sample calculations of First Sale Profit Payment Rent. The following terms shall have the following meanings for the purposes of this Section 4.2.2:

23.2.3 "**Deemed Leasehold Acquisition Fee Payment**" means the amount equal to Five Million Two Hundred Twenty Thousand Dollars ($5,220,000) which represents funds previously paid to the Authority by an affiliate of the Affordable Lessee toward the payment of the "**Leasehold Acquisition Fee**" (as defined in the Affordable Premises Ground Lease).

23.2.4 "**Deferred Development Fee**" means any portion of the developer fee payable to the Affordable Lessee or the Lessee in connection with the development of the Improvements which was not paid from development sources. The Deferred Development Fee shall not exceed the sum of Two Million Sixty-Four Thousand Eight Hundred Eighty-Six Dollars ($2,064,886), minus any portion of such development fee paid upon closing of the Senior Loan, upon which deferred amount no interest shall accrue or be payable.

23.2.5 "**Development Deficit Advance**" means any loan or capital contribution made to the Affordable Lessee or the Lessee to fund development cost overruns associated with the Improvements, and any accrued interest thereon.

23.2.6 "**Distributable Cash**" means, for any period, Operating Receipts less Operating Expenses.

23.2.7 "**Gross Sale Proceeds**" means the gross sale proceeds received by the Affordable Lessee or the Lessee from the Sale of the Improvements.

23.2.8 "**IRR**" means the annual discount rate, compounded monthly, at which the net present value as of the Senior Loan Closing Date of all Distributable Cash (discounted at such rate from the dates such Distributable Cash was actually received and was available for distribution), is equal to the net present value as of the Senior Loan Closing Date of the Phase IIB Developer Equity Investment. For the purposes of calculating IRR, Distributable Cash shall be deemed to be available for distribution on a quarterly basis in arrears based upon the Distributable Cash of the prior calendar quarter.

23.2.9 "**Net Sale Profit**" means an amount equal to the Gross Sale Proceeds less the following: (i) payment of actual third party costs and expenses incurred in connection with the Sale, including, without limitation, title and escrow fees, documentary transfer taxes, legal and accounting fees, marketing expenses and brokerage commissions (which commissions shall not exceed two percent (2%) of the Gross Sale Proceeds); (ii) payment of any outstanding amount of the Senior Loan, including, without limitation, repayment of outstanding principal and interest on any such debt and the payment of any fees and/or expenses imposed in connection with the repayment of such Senior Loan, including, without limitation, any prepayment penalties; (iii) payment of any outstanding Development Deficit Advances, Operating Deficit Advances and/or Deferred Development Fee; (iv) payment to the Lessee of an amount equal to

the Deemed Leasehold Acquisition Fee Payment; (v) payment to the Lessee of an amount equal to the Senior Letter of Credit Draw Amount; and (vi) payment to the Lessee of an amount which would cause Lessee to receive a twenty percent (20%) IRR on the Phase IIB Developer Equity Investment when taking into account all prior Distributable Cash received by the Affordable Lessee or the Lessee.

23.2.10"**Operating Deficit Advance**" means any loan or capital contribution made to the Affordable Lessee or the Lessee to fund operating deficits associated with the Improvements, and any accrued interest thereon.

23.2.11"**Operating Expenses**" for a particular period means all sums actually paid by or on behalf of the Lessee during that period in connection with the owning, financing, leasing, management, maintenance, or repair or operation of the Improvements, including, but not limited to (but only to the extent actually paid by or on behalf of the Lessee or deposited to a reserve in that period): (a) any debt service, whether principal, interest or otherwise, and letter of credit and other financing fees and charges (including remarketing fees, fiscal agent fees, costs of purchasing interest rate protection (if applicable) and the like) paid pursuant to any borrowing of Lessee (including, without limitation, any payment made pursuant to the Senior Loan and/or any repayment of Development Deficit Advances, Operating Deficit Advances and/or Deferred Developer Fee); (b) management fees, leasing commissions and tenant allowances; (c) property taxes and assessments and sewer and water charges (or escrows or deposits for same paid to any lender of Lessee and/or any agent thereof or reserves for same held by the Lessee); (d) insurance premiums or escrows or deposits for same paid to any lender of Lessee and/or any agent thereof or reserve for same held by the Lessee; (e) additions and deposits to capital reserve, interest reserve and working capital reserve accounts; (f) any expenditure for a capital item not covered by a capital reserve; (g) legal, accounting and audit fees directly related to ownership, leasing, management, maintenance, repair or operation of the Improvements directly or indirectly related to preparing reports as may be required by any lender of Lessee and/or the Authority. Operating Expenses will not include (i) any depreciation, amortization, bad debt allowance, or other non-cash item of expense; (ii) except as provided in clause (f) above, any expenditure for any capital item; (iii) any expenditure for repair that is paid out of casualty insurance proceeds or a condemnation award; and (iv) disbursements from the capital reserve account established and funded pursuant to (e) of this section.

23.2.12"**Operating Receipts**" for a particular period means all rents, fees, and other sums actually paid to the Affordable Lessee or the Lessee during such period for occupancy, use or operation of the Improvements, including, but not limited to, amounts paid to the Affordable Lessee or the Lessee from parking, vending, utility or other concessions in the Improvements. Gross Receipts will also include, but not be limited to (but only to the extent actually received by or for the benefit of the Affordable Lessee or the Lessee in a particular period for such occupancy, use or operation) any condemnation awards or rental insurance proceeds paid in lieu of rent (but not other casualty proceeds or condemnation awards). Operating Receipts shall not include the proceeds of any loan made to the Affordable Lessee or the Lessee (including, without limitation, any proceeds realized from the Senior Loan, any Development Deficit Advance and/or any Operating Deficit Advance), the proceeds of any equity contribution made to the Affordable Lessee or the Lessee by any member thereof (including, without limitation, the proceeds of any tax credit equity contributions), or security

deposits received from any sub-tenant of the Improvements until applied by the Affordable Lessee or the Lessee.

23.2.13"**Phase IIB Developer Equity Investment**" means an amount equal to the sum of the Deemed Leasehold Acquisition Fee Payment plus the initial face amount of the Senior Loan Letter of Credit.

23.2.14"**Sale**" means a sale of the Improvements, the entirety of the Phase IIB Improvements and/or the sale or other transfer (whether in one transaction or in a series of transactions) of more than fifty percent (50%) of the membership interests in Lessee, in each case to a person or entity who is not an Affiliate of Lessee.

23.2.15 "**Senior Loan Closing Date**" means the date upon which the deed of trust securing the Senior Loan is recorded against the Lessee's interest in the Premises.

23.2.16"**Senior Loan Letter of Credit**" means the Letter of Credit initially issued on behalf of STRS for the benefit of the Lessee to secure repayment of the Senior Loan, or any replacement or subsequent letter of credit, cash collateral or other instrument securing repayment of the Senior Loan.

23.2.17"**Senior Loan Letter of Credit Draw Amount**" means the amount, if any, of the Senior Loan Letter of Credit which is drawn upon in connection with the Senior Loan.

23.2.18"**STRS**" means STRS Ohio CA Real Estate Investments II, LLC, a Delaware limited liability company, or any successor or assign thereof.

23.3 **Timing of Lease Consideration Payments.**

23.3.1 Reserved.

23.3.2 First Sale Profit Payment Rent shall be paid by Lessee upon closing of the sale that triggers such First Sale Profit Payment Rent payment pursuant to Section 4.2.2.

23.4 **Payment and Late Fees.** Lease Consideration payments shall be made by check or draft issued and payable to The Los Angeles Grand Avenue Authority, accompanied by a detailed statement showing the basis for its calculation of the amount payable to Authority and mailed or otherwise delivered to the Authority at the address set forth in Section 15.10, or such other address as may be provided to Lessee by Authority. Lessee acknowledges that Authority shall have no obligation to issue statements, invoices or other demands for payment, and that the Lease Consideration payments required herein shall be payable notwithstanding the fact that Lessee has received no such statement, invoice or demand. If any Lease Consideration payment is not received by Authority on the date due, Lessee acknowledges that Authority will experience additional management, administrative and other costs that are impracticable or extremely difficult to determine. Therefore, any First Sale Profit Payment Rent or other amounts owing hereunder which are not paid on the date due shall bear interest from the date when due until paid at a rate per annum equal to the lesser of (i) the Reference Rate plus three percent (3%) per annum or (ii) the highest rate permitted by applicable Laws. Additionally, a fee ("**Late Fee**") of

six percent (6%) of the unpaid amount shall be added to any amount unpaid within five (5) days after the date such amount was due. Lessee acknowledges that such Late Fee and interest shall be applicable to all identified monetary deficiencies under this Lease, whether identified by audit or otherwise, and that interest on such amounts shall accrue from and after the date when such amounts were due and payable as provided herein (as opposed to the date when such deficiencies are identified by Authority). If any payment by Lessee to Authority hereunder becomes subject to disgorgement or is subject to any lien in favor of a third party as a result of Lessee's actions or agreements, then Lessee shall immediately replace any such payment to the extent it is so disgorged and shall immediately remove any lien on such payment so that Authority has the full and unfettered use of such funds.

23.5 **Lessee's Books and Records.** Lessee shall maintain in a safe and orderly manner all of its records necessary to compute and calculate the First Sale Profit Payment Rent payable pursuant to this Article 4 for a period of four (4) years following the completion of the sale that triggers such First Sale Profit Payment Rent payment. Lessee shall maintain such records on a current basis and in sufficient detail to permit adequate review thereof and, at all reasonable times, copies of such records shall be available to the Authority or its representatives for such purposes. The Authority may, by written notice to Lessee within three (3) years after First Sale Profit Payment Rent was paid (or due to be paid) to the Authority, cause an audit to be commenced by a nationally recognized firm of certified public accountants, at the Authority's sole expense (subject to the last sentence of this Section 4.5), to verify if Lessee's calculations of First Sale Profit Payment Rent were accurate. If such audit reveals an underpayment of First Sale Profit Payment Rent, then Lessee shall promptly pay the amount so underpaid to the Authority, together with interest thereon at the Reference Rate plus three percent (3%) calculated from the date such First Sale Profit Payment Rent was first due until the date actually paid. If it is determined that Lessee underpaid First Sale Profit Payment Rent by more than three percent (3%), the Authority shall be entitled to receive from Lessee its actual and reasonable audit expenses incurred in respect to the audit of First Sale Profit Payment Rent.

24. **ALTERATIONS**.

24.1 **Reserved.**

24.2 **Application of Article 5**. This Article 5 applies only to the construction of alterations or modifications to the Phase IIB Improvements that Lessee may be required or desire to make that affect the public areas, the exterior of the Improvements or the Parking Garage, or that cause a change in the Permitted Uses or materially reduce the value of the Improvements (collectively, together with the Subsequent Renovations described in Section 5.9 below, "**Alterations**").

24.3 **Plans and Specifications for Alterations**. Lessee shall make no Alterations without the prior written approval of the Director (except as expressly provided in Section 5.7 below). Prior to and as a condition precedent to the construction of any Alterations, Lessee shall submit to Director, for Director's approval, the plans, specifications and other materials described in this Section 5.3 pertaining to such Alterations. All Alterations must be consistent with the Permitted Uses set forth in Article 3 of this Lease.

24.3.1 Schematics and Narrative. Lessee shall submit to the Director six (6) sets of schematic plans together with a narrative description and construction cost estimate summary clearly delineating the nature, size, configuration and layout of the Alterations. Such plans shall, among other things, clearly delineate the architectural theme or motif of the Alterations and shall identify and illustrate the boundaries of the Premises and all rights-of-way or other areas reserved to Authority or third parties which are located thereon. Director shall have sixty (60) days within which to approve or disapprove such submission. Failure by Director to either approve or disapprove such submission within said sixty (60) day period shall be deemed an approval; provided, however, that no submission shall be deemed approved unless the request for approval contains the following provision, in bold print:

> **NOTICE IS HEREBY GIVEN THAT FAILURE TO APPROVE OR DISAPPROVE THE REQUESTED MATTER WITHIN 60 DAYS SHALL BE DEEMED AN APPROVAL PURSUANT TO SECTION 5.3.1 OF THE PHASE IIB GROUND LEASE.**

After approval of schematic plans (or subsequent approval of preliminary or final plans) by Director, if changes in such plans are required by conditions of approval of the Alterations imposed by another governmental agency having jurisdiction thereover, Lessee shall promptly advise Director in writing of such changes and Director shall not disapprove the changes required by such other governmental agency, as appropriate, unless such changes materially prejudice Authority's ability to enjoy the rights and benefits granted to Authority pursuant to this Lease.

24.3.2 Preliminary Plans and Specifications. After Director's approval of the materials submitted pursuant to Subsection 5.3.1, Lessee shall submit to Director six (6) sets of preliminary plans, outline specifications and construction cost estimates for the Alterations. The preliminary plans, outline specifications and construction cost estimate shall conform to, expand upon and reflect a natural evolution from the descriptions and estimates set forth in the approved schematic plans and narrative. Any material difference in the scope, size, configuration, arrangement or motif of the Alterations from those described in the approved schematics and narrative shall be separately identified and described. Director shall have twenty-one (21) days within which to approve or reasonably disapprove such submission, and Director may disapprove said preliminary plans on the grounds that they do not reflect a natural evolution from the approved schematic plans or that they materially differ from the approved schematic plans and narrative. Failure of Director to approve or disapprove said preliminary plans within twenty one (21) days after Director's receipt thereof shall be deemed Director's approval thereof; provided, however, that if the preliminary plans, outline specifications and construction cost estimates contain substantial changes from the approved schematics and narrative, then Director shall have sixty (60) days in which to approve said submission, which approval shall be deemed withheld if not granted in writing within such sixty (60) day period; and provided further, that together with the submission of the preliminary plans, outline specifications and construction cost estimates, Lessee must deliver to Director a transmittal letter containing the following text prominently displayed in bold faced type:

"PURSUANT TO SECTION 5.3.2 OF THE PHASE IIB MARKET RATE GROUND LEASE, IF THESE MATERIALS CONTAIN NO SUBSTANTIAL CHANGES FROM THE MATERIALS PREVIOUSLY SUBMITTED TO YOU, YOU HAVE TWENTY ONE (21) DAYS AFTER RECEIPT OF THESE MATERIALS IN WHICH TO APPROVE OR DISAPPROVE THEM. FAILURE TO DISAPPROVE THESE MATERIALS IN WRITING WITHIN TWENTY ONE (21) DAYS OF YOUR RECEIPT OF THESE MATERIALS SHALL CONSTITUTE YOUR APPROVAL OF THEM."

24.3.3 Final Plans and Specifications. After Director's approval of the preliminary plans, outline specifications and construction cost estimate, Lessee shall submit for approval by Director six (6) complete sets of final plans, detailed specifications and a construction cost statement for the Alterations, together with one (1) set of appropriate structural computations, identical to those requested or required by the relevant government agency incident to the issuance of building permits. Lessee shall file duplicate copies of the final plans, detailed specifications and construction cost statement required by this Section with the relevant government agency, together with the necessary and appropriate applications for building permits. Any material difference in the scope, size, configuration, arrangement or motif of the Alterations from those described in the approved preliminary plans and specifications shall be separately identified and described. Director shall have twenty one (21) days within which to approve or disapprove such submission, and Director may disapprove such submission on the grounds that they do not reflect a natural evolution from or that they materially differ from the approved preliminary plans, outline specifications and construction cost estimates. Failure of Director to disapprove said materials within twenty one (21) days after Director's receipt shall be deemed Director's approval thereof; provided, however, that in the event that the final plans, detailed construction specifications and construction cost statement contain substantial changes from the preliminary plans, outline specifications and construction cost estimates, then Director shall have sixty (60) days in which to approve said submission, which approval shall be deemed withheld if not granted in writing within such sixty (60) day period; and provided further, that together with the submission of the final plans, detailed construction specifications and construction cost statement, Lessee must deliver to Director a transmittal letter containing the following text prominently displayed in bold faced type:

"PURSUANT TO SECTION 5.3.3 OF THE PHASE IIB MARKET RATE GROUND LEASE, IF THESE MATERIALS CONTAIN NO SUBSTANTIAL CHANGES FROM THE MATERIALS PREVIOUSLY SUBMITTED TO YOU, YOU HAVE TWENTY ONE (21) DAYS AFTER RECEIPT OF THESE MATERIALS IN WHICH TO APPROVE OR DISAPPROVE THEM. FAILURE TO DISAPPROVE THESE MATERIALS IN WRITING WITHIN TWENTY ONE (21) DAYS OF YOUR RECEIPT OF THESE MATERIALS SHALL CONSTITUTE YOUR APPROVAL OF THEM."

Director's approval shall not be unreasonably withheld; provided, however, that it shall be deemed reasonable to disapprove any submission not in substantial conformity with the approved preliminary plans and specifications. No material modification shall be made to the Alterations

described in the approved final plans, specifications and costs (the "**Final Plans and Specifications**") without the prior written approval of Director, which shall not be unreasonably withheld.

24.4 **Conditions Precedent to the Commencement of Construction of Alterations**. No construction of Alterations shall be commenced until each and all of the following conditions have been satisfied:

24.4.1 Permits and Other Approvals. Lessee shall, at its own expense, have secured or caused to be secured any and all permits which may be required by the City or any other governmental agency regulating such Alterations.

24.4.2 Copies of Construction Contracts. Lessee shall have furnished Authority with copies of any contract(s) entered into between Lessee and any general contractor(s) employed for the purpose of constructing the Alterations.

24.4.3 Performance and Payment Bonds. At least ten (10) business days prior to the commencement of construction of any Alterations costing in excess of $1,000,000 (which amount shall be increased, but not decreased, on an annual basis beginning on January 1, 2013 and on each subsequent January 1 by the same percentage increase as the increase in the CPI from January 1 of the immediately preceding year), Lessee shall have delivered to Authority copies of labor and material bonds and payment and performance bonds, each in an amount not less than one hundred percent (100%) of the cost set forth in the applicable construction contract for such work and naming Authority and the County as obligees. Said bonds shall be issued by an insurance company licensed to do business in the State of California and named in the current list of "Surety Companies Acceptable on Federal Bonds" as published in the Federal Register of the U.S. Treasury Department. Authority shall consider (but have no obligation to approve) alternate forms of reasonable assurance that the work will be completed in the manner contemplated by this Lease, including a letter of credit.

24.4.4 Completion Guaranty. In lieu of delivery of payment and performance bonds in accordance with Section 5.4.3 above, Lessee shall have the option to deliver to Authority a completion guaranty reasonably satisfactory to Authority. Authority agrees to approve a guarantor that has been approved by Lessee's construction lender (including Related, if so approved by Lessee's construction lender). Such completion guaranty shall be subject to the construction lender's first right to enforce any guaranty of completion of the Alterations, or any portion thereof, in favor of such lender. Authority will retain the right to enforce the completion guaranty if the construction lender fails to cause the Alterations to be completed. Authority will defer enforcement of the completion guaranty until notice of default is given to Lessee, all cure periods under the loan documents have elapsed, and the construction lender has had an additional two (2) months to commence enforcement of the completion guaranty in favor of such lender (as such period may be extended by litigation between Lessee and its lender over the enforcement of the completion guaranty). Lessee hereby waives any statute of limitations on enforcement of the completion guaranty by Authority.

24.4.5 Evidence of Financing. Lessee shall have provided the Authority with evidence of a commitment from an Institutional Lender to provide construction financing for the

total cost of the Alterations (or evidence that Lessee has capital commitments together with such construction financing sufficient to cover the cost of the construction of such Alterations).

24.5 **Manner of Construction**.

24.5.1 General Construction Standards. All construction, alteration, modification or repairs shall be accomplished by Lessee with due diligence. Lessee shall take all reasonable steps to minimize any damage, disruption or inconvenience caused by such work and make adequate provisions for the safety and convenience of all persons affected thereby. Lessee shall repair, at its own cost and expense, any and all damage caused by such work, and shall restore the area upon which such work is performed to a condition which is at least equal to or better than the condition which existed before such work was commenced. Additionally, Lessee shall pay or cause to be paid all costs and expenses associated therewith and shall indemnify, defend and hold Authority harmless from and against all damages, costs, expenses, losses or claims arising out of or in connection with the performance of such work, except to the extent that such damages, costs, expenses, losses or claims are caused by Authority, its employees or agents acting within the scope of their employment or agency relationship. Dust, noise and other effects of such work shall be controlled using accepted measures customarily utilized in order to control deleterious effects associated with construction projects in well populated and developed areas of Southern California.

24.5.2 Utility Work. Any work performed by or on behalf of Lessee or any occupant of the Premises to connect to, repair, relocate, maintain or install any storm drain, sanitary sewer, water line, gas line, telephone conduit, or any other utility service shall be performed in a manner that minimizes interference with the provision of such services to the Premises and other persons.

24.5.3 Construction Safeguards. Lessee shall erect and properly maintain at all times, as required by the conditions and the progress of work performed by or on behalf of Lessee, all necessary safeguards for the protection of workers and the public.

24.5.4 Compliance with Construction Documents and Laws. All Improvements and Alterations on the Premises shall be completed in substantial compliance with any construction documents approved by Authority and also in compliance with all Laws.

24.5.5 Notice to Director; Damage to Public Improvements. Lessee further agrees to keep Director apprised of the progress of the work to the end that Director may timely inspect the Premises to assure proper safeguarding of any public-owned improvements existing on or around the Premises, including but not limited to underground conduits and utility lines. If any such public-owned improvement is damaged in connection with said construction activity, Lessee agrees to repair such damage immediately at no cost or expense to Authority or, in the event that Lessee fails to effectuate such repair within five (5) business days after written notice from Authority (or such longer period as may be reasonably required to complete such repair so long as Lessee commences such repair within five (5) business days and thereafter diligently prosecutes same to completion), Authority may, subject to the rights of Mortgagees under Article 12 hereof, enter upon the Premises to make such repairs, the Actual Cost of which shall be paid by Lessee within five (5) business days after demand by Authority.

24.5.6 Rights of Access. For the purposes of assuring compliance with this Lease, representatives of the Governing Entities shall have the reasonable right of access to the Premises without charges or fees during normal construction hours during the period of construction for the purpose of ascertaining compliance with this Lease, including but not limited to the inspection of the construction work being performed, provided that such access does not interfere with the construction of the Improvements or the Alterations, as applicable. The representatives of the Governing Entities shall be those who are previously identified to Lessee in writing by the Governing Entities. The applicable Governing Entities shall provide Lessee, prior to the representatives' access of the Premises, with evidence of comprehensive general liability insurance with limits and coverages reasonably acceptable to Lessee or, at the Governing Entities' election, the Governing Entities may self-insure for such risks, and shall indemnify and pay for the defense of Lessee and hold it harmless from any damage caused or liability arising out of such right of access. Such access shall be reasonably calculated to minimize interference with Lessee's construction and/or operations. Lessee shall have the right to have a representative present to accompany the representatives of the Governing Entities in connection with such access. In the event of any emergency which is life-threatening or which involves the threat of potential substantial damage, Authority shall have the right to enter the Premises immediately and without notice to or accompaniment by Lessee.

24.6 **Use of Plans**. If this Lease is terminated prior to the expiration of the Term as provided herein, Lessee's rights to all work product prepared pursuant hereto, including, but not limited to, all plans and construction documents, shall belong to the CRA as the fee owner of the Premises. In the event of any such termination, Lessee shall, within ten (10) days of such termination, transmit all such work product to the Authority for distribution to the CRA.

24.7 **Reserved**.

24.8 **Protection of Authority**. Nothing in this Lease shall be construed as constituting the consent of Authority, express or implied, to the performance of any labor or the furnishing of any materials or any specific Improvements, Alterations or repairs to the Premises or any part thereof by any contractor, subcontractor, laborer or materialman, nor as giving Lessee or any other person any right, power or authority to act as agent of or to contract for, or permit the rendering of, any services, or the furnishing of any materials, in any such manner as would give rise to the filing of mechanics' liens or other claims against the Premises or Authority.

24.8.1 Posting Notices. Authority shall have the right at all reasonable times and places to post and, as appropriate, keep posted, on the Premises any notices which Authority may deem necessary for the protection of Authority, the Premises and the Improvements thereon from mechanics' liens or other claims. With respect to any Alterations costing in excess of $500,000 (which amount shall be increased, but not decreased, on an annual basis beginning on January 1, 2013 and on each subsequent January 1 by the same percentage increase as the increase in the CPI from January 1 of the immediately preceding year), Lessee shall give Authority at least ten (10) business days prior written notice of the commencement of such Alterations, in order to enable Authority timely to post such notices.

24.8.2 Prompt Payment. Lessee shall make, or cause to be made, prompt payment of all monies due and owing to all persons doing any work or furnishing any materials

or supplies to Lessee or any of its contractors or subcontractors in connection with the Premises and the Improvements thereon. Lessee shall have the right to contest any such amount; provided, however, the entire expense of any such contest (including interest and penalties which may accrue) shall be the responsibility of Lessee.

24.8.3 Liens; Indemnity. Lessee shall keep the Premises and any Improvements thereon free and clear of all mechanics' liens and other liens arising out of or in connection with work done for Lessee and/or any parties claiming through Lessee. Lessee agrees to and shall indemnify, defend and hold Authority harmless from and against any claim, liability, loss, damages, costs, expenses, attorneys' fees incurred in defending and all other expenses on account of claims of lien(s) of laborers or materialmen or others for work performed or materials or supplies furnished to Lessee or persons claiming under it. In case of any such lien attaching or notice of any lien, Lessee covenants and agrees to cause it to be released and removed of record within ten (10) business days after Lessee receives notice of such lien, except that Lessee shall have the right to contest any such lien so long as Lessee posts a bond removing such lien from title in the amount required by law within such ten (10) business day period.

24.9 **Subsequent Renovations**. Lessee covenants that throughout the Term the Premises and all Improvements thereon shall be maintained as a top quality retail and residential development at least comparable to facilities similar in size and nature to the Premises in the Southern California region (the "**Renovation Standard**"). Such obligation shall include requisite upgrades to building facades, storefronts, signage, roofs, common area lighting, common area landscaping and irrigation systems, and common area vehicle parking and striping surfaces.

Prior to the commencement of construction of a material renovation and upgrade of the Improvements (other than the interiors of the Sublessees' spaces in the Retail Improvements) (each, a "**Subsequent Renovation**"), Lessee shall submit to Director, for Director's approval, a renovation plan for such Subsequent Renovation (a "**Subsequent Renovation Plan**"), which renovation plan shall (a) describe the proposed renovation work in detail, (b) include a design, governmental approval and construction schedule for the work described therein, (c) include a budget for all work costs, and (d) address such other matters as Director reasonably requests. The Subsequent Renovation Plan shall be submitted by Lessee to Authority not later than such date as, taking into consideration the approval periods described in this Section 5.9 and Section 5.3 above, and the estimated time required to obtain all necessary governmental approvals and permits, will permit the commencement by Lessee of the applicable Subsequent Renovation by the date required under this Section 5.9. Director shall have sixty (60) days within which to approve or disapprove the Subsequent Renovation Plan. If Director fails to notify Lessee in writing of its approval or disapproval of the Subsequent Renovation Plan, Director shall be deemed to have approved; provided, however, that the Subsequent Renovation Plan shall not be deemed approved unless the request for approval contains the following provision, in bold print:

NOTICE IS HEREBY GIVEN THAT FAILURE TO APPROVE OR DISAPPROVE THE REQUESTED MATTER WITHIN 60 DAYS SHALL BE DEEMED AN APPROVAL PURSUANT TO SECTION 5.9 OF THE PHASE IIB GROUND LEASE.

Upon Director's approval of the Subsequent Renovation Plan, Lessee shall proceed to satisfy all conditions in this Article 5 to the commencement of the Subsequent Renovation and to commence and complete the Subsequent Renovation in accordance with the Subsequent Renovation Plan and the terms and conditions of this Article 5. Lessee's failure to comply with the schedule approved by Director as part of Subsequent Renovation Plan shall, if not cured within the cure period set forth in Section 13.1.2, constitute an Event of Default.

Notwithstanding the foregoing provisions of this Section 5.9, Lessee's obligation to make Subsequent Renovations to comply with the Renovation Standard as set forth in this Section 5.9 shall not be applicable to the storefront, facade and/or signage of any individual Sublessee premises that are subleased by Lessee to a national or regional tenant to the extent that Lessee does not have the authority under the applicable Sublease to make renovations, or to require the Sublessee to make renovations, to such facade, storefront and/or signage to permit Lessee to comply with the requirements of this Section 5.9; provided, however, that Lessee shall use commercially reasonable efforts to arrange for such Sublessees to perform, or permit the performance of, upgrades that would permit Lessee to comply with the requirements of this Section 5.9; and provided, further, that upon the expiration or earlier termination of any such Sublease, Lessee shall be obligated to upgrade or cause to be upgraded such Sublease premises to meet the Renovation Standard.

24.10 **Force Majeure, Enforced Delay, Extension of Time of Performance**. Time is of the essence in this Lease. Performance by any party hereunder shall not be deemed to be in default where delays or defaults are due to war; insurrection; strikes; lock-outs; riots; floods; earthquakes; fires; casualties; acts of God; acts of the public enemy; epidemics; quarantine restrictions; freight embargoes; lack of transportation; governmental restrictions or priority; litigation; unusually severe weather; inability to secure necessary labor, materials or tools; acts of another party; acts or the failure to act of any public or governmental agency or entity (except that acts or the failure to act of Authority shall not excuse performance by Authority) or any other causes beyond the reasonable control or without the fault of the party claiming an extension of time to perform ("**Force Majeure**"). An extension of time for Force Majeure shall only be for the period of the enforced delay, which period shall commence to run from the time of the commencement of the cause. The party requesting an extension of time under this Section shall give notice promptly following knowledge of the delay to the other party. If, however, notice by the party claiming such extension is sent to the other party more than thirty (30) days after knowledge of the commencement of the delay, the period shall commence to run upon the earlier of (i) thirty (30) days prior to the giving of such notice or (ii) the date that the other party received knowledge of the events giving rise to the delay. For purposes of this Section 5.10, a cause shall be beyond the control of the party whose performance would otherwise be due only if and to the extent such cause would prevent or hinder the performance of an obligation by any reasonable person similarly situated and shall not apply to causes peculiar to the party claiming the benefit of this Section (such as a failure to order materials in a timely fashion).

24.11 **Notice of Completion of Alterations.** Upon completion of any Alterations, Lessee shall file or cause to be filed in the Official Records of the County of Los Angeles a Notice of Completion (the "**Notice of Completion**") with respect to the Alterations and Lessee shall deliver to Authority, at no cost to Authority, two (2) sets of conoflex or mylar final as-built plans and specifications of the Alterations.

25. CONDEMNATION.

25.1 Definitions.

25.1.1 Condemnation. "**Condemnation**" means (1) the exercise by any governmental entity of the power of eminent domain, whether by legal proceedings or otherwise, and (2) a voluntary sale or transfer to any Condemnor (as hereafter defined), either under threat of Condemnation or while legal proceedings for Condemnation are pending.

25.1.2 Date of Taking. "**Date of Taking**" means the date the Condemnor has the right to possession of the Premises being condemned.

25.1.3 Award. "**Award**" means all compensation, sums or anything of value awarded, paid or received from a total or partial Condemnation.

25.1.4 Condemnor. "**Condemnor**" means any public or quasi-public authority, or private corporation or individual, having the power of eminent domain.

25.1.5 Total Taking. "**Total Taking**" means a permanent Condemnation of all of the Premises.

25.1.6 Partial Taking. "**Partial Taking**" means a permanent Condemnation of less than all of the Premises.

25.1.7 Temporary Taking. "**Temporary Taking**" means a Condemnation for a period of time less than the entire remaining Term of this Lease.

25.2 **Parties' Rights and Obligations to be Governed by Lease**. If, during the Term of this Lease, there is any taking of all or any part of the Premises, any Improvements on the Premises or any interest in this Lease by Condemnation, the rights and obligations of the parties shall be determined pursuant to the provisions of this Article 6.

25.3 **Total Taking**. If a Total Taking occurs, this Lease shall terminate on the Date of Taking.

25.4 **Effect of Partial Taking**. If a Partial Taking occurs, this Lease shall remain in effect, except that Lessee may elect, subject to Section 12.5, to terminate this Lease if Improvements constituting more than twenty-five percent (25%) of the replacement cost of all of the Improvements on the Premises are the subject of such Partial Taking, or if such Partial Taking results in Lessee's loss of access to the Improvements so that Lessee has no effective use thereof. Lessee must exercise its right to terminate by giving Authority written notice of its

election within ninety (90) days after the nature and extent of the taking and the probable amount of compensation have been determined. Such notice shall also specify the date of termination, which shall not be prior to the Date of Taking. Failure to properly exercise the election provided for in this Section 6.4 will result in this Lease's continuing in full force and effect.

If Lessee does not elect to terminate this Lease as provided above, then Lessee, whether or not the Award or payments, if any, on account of such taking shall be sufficient for the purpose, shall, at its sole cost and expense, within a reasonable period of time, commence and complete restoration of the remainder of the Premises as nearly as possible to its value, condition and character immediately prior to such taking, taking into account, however, any necessary reduction in size or other change resulting from the taking; provided, however, that in case of a Temporary Taking, Lessee shall not be required to effect restoration until such taking is terminated. Lessee shall furnish to Authority evidence satisfactory to Authority of the total cost of the restoration required by this Section 6.4.

25.5 **Effect of Partial Taking on Lease Consideration**. If a Partial Taking occurs and this Lease remains in full force and effect as to the portion of the Premises that is not the subject of the Partial Taking, the Lease Consideration payable under this Lease shall not be reduced and all other obligations of Lessee under this Lease, including but not limited to the obligation to pay First Sale Profit Payment Rent, shall remain in full force and effect.

25.6 **Waiver of Code of Civil Procedure Section 1265.130**. Each party waives the provisions of Code of Civil Procedure Section 1265.130 allowing either party to petition the Superior Court to terminate this Lease in the event of a Partial Taking or Temporary Taking.

25.7 **Payment of Award**. Awards and other payments, less costs, fees and expenses incurred in the collection thereof ("**Net Awards and Payments**") on account of a Condemnation shall be applied as follows:

25.7.1 Partial Taking Without Termination. Subject to the right of any Mortgagee (in order of priority) to hold and disburse Net Awards and Payments under its respective Mortgage, Net Awards and Payments received on account of a Partial Taking which does not result in termination hereof shall be held by Authority and shall be paid out to Lessee or Lessee's designee(s), in progress payments, for the cost of restoration of the Premises. Subject to the rights of any Mortgagee (in order of priority) to reduce the balance of the indebtedness secured by its Mortgage, the balance, if any, following the restoration of the Premises, shall be divided between Authority and Lessee pro rata, as nearly as practicable, based upon (1) the then value of Authority's interest in the Premises (including its interest hereunder) and (2) the then value of Lessee's interest in the remainder of the Term of this Lease including bonus value. Any determinations of fair market value made pursuant to this Section 6.7 shall be predicated upon the "income approach" or "income capitalization approach" to property valuation, as defined in The Dictionary of Real Estate Appraisal and/or The Appraisal of Real Estate, published by the Appraisal Institute or any successor organization (the "**Income Approach**").

25.7.2 Temporary Taking. Net Awards and Payments received on account of a Temporary Taking shall be paid to Lessee; provided, however, that if any portion of any such award or payment is paid by the Condemnor by reason of any damage to or destruction of the

Improvements, such portion shall be held by Authority and shall be paid out to Lessee or Lessee's designee(s), in progress payments, for the cost of restoration of the Premises.

25.7.3 Total Taking and Partial Taking with Termination. Net Awards and Payments received on account of a Total Taking or a Partial Taking which results in the termination of this Lease shall be allocated in the following order:

First: There shall be paid to each Mortgagee (in order of priority), if any, an amount equal to the sum of any unpaid principal amount of its respective Mortgage secured by the Premises plus costs, expenses, and other sums due pursuant the loan documents, if any, and any interest accrued thereon, all as of the date on which such payment is made.

Second: There shall be paid to Authority an amount equal to the present value of the portion of the Premises (with the Improvements thereon) subject to the taking from and after the expiration of the Term.

Third: There shall be paid to Lessee an amount equal to the value of Lessee's interest in the remainder of the Term of this Lease, including the value of the ownership interest in and use of the Improvements constructed on the Premises, determined as of the date of such taking, less payments made under paragraph Second above. For such purposes, the Term of this Lease shall not be deemed to have terminated even if Lessee so elects under Section 6.4.

Fourth: The balance shall be paid to Authority.

25.7.4 Disputes. Any dispute under this Article 6 concerning the fair market value of the Premises or any portion thereof, computation of present value or the determination of the amount of First Sale Profit Payment Rent or other sums which would have become due over the Term of this Lease which are not resolved by the parties, shall be submitted to arbitration pursuant to Article 16 of this Lease. Such valuations, computations and determinations of value shall be made utilizing the Income Approach.

25.7.5 Payments to Mortgagee. Notwithstanding anything to the contrary set forth in this Article 6, all compensation awarded upon a Condemnation or taking to which Lessee may be entitled hereunder shall be paid to each Mortgagee (if any, in order of priority) to be distributed in accordance with the terms of its respective Mortgage; provided, however, that if Lessee satisfies all conditions for the release of the Premises from the lien of a Mortgage, then the applicable Mortgagee shall be paid only the amount of such compensation awarded which equals the amount such Mortgagee would have received if, at such time, the Premises were released pursuant to the terms of its Mortgage.

25.8 **Waiver of Right to Condemn**. Authority and the CRA each hereby waives for and on behalf of itself, for the benefit of Lessee, any right that it may have to commence or complete any Condemnation with respect to the Premises during the Term of this Lease.

26. CERTAIN COVENANTS OF LESSEE.

26.1 Reserved.

26.2 **Condominium Conversions**.

Without limiting the effect of Section 17.7, without the prior consent of the Authority, no individual units in the Phase IIB Improvements shall be transferred or sold as individual condominium units during the Term of this Lease.

27. **INDEMNITY**.

Lessee shall at all times defend, indemnify, protect, and save harmless the Authority, the CRA, the City, the County, and their respective commissioners, council members, board members, officers, beneficiaries, employees, agents, attorneys, representatives, legal successors and assigns (collectively, "**Authority Indemnified Parties**") and all persons acting under, through, or on behalf of them, from any and all claims, costs, losses, expenses or liability, including attorneys' fees and costs of litigation, for the death of or injury to persons or damage to property, including property owned or controlled by or in the possession of Authority Indemnified Parties, to the extent that such arises from or is caused by (a) the construction, alteration, improvement, operation, management, maintenance, use, or occupancy of the Premises by Lessee or its agents, officers, employees, licensees, concessionaires, permittees or Sublessees, (b) the acts, omissions, or negligence of Lessee, its agents, officers, employees, licensees, concessionaires, permittees or Sublessees in connection with this Lease or the Premises, or (c) the failure of Lessee, its agents, officers, employees, licensees, concessionaires, permittees or Sublessees to observe and abide by any of the terms or conditions of this Lease or any applicable law, ordinance, rule, or regulation pertaining to this Lease or the Premises; provided, however, that the terms of the foregoing indemnity shall not apply to the gross negligence or willful misconduct of the Authority Indemnified Parties. Lessee shall pay immediately upon demand of the Authority Indemnified Parties any amounts owing under this indemnity. The duty of Lessee to indemnify includes the duty to defend the Authority Indemnified Parties or, at the Authority Indemnified Parties' choosing when said defense is not being provided by a commercial carrier of insurance, to pay the Authority Indemnified Parties' costs of their defense in any court action, administrative action, or other proceeding brought by any third party arising from this Lease or the Premises. The obligation of Lessee to so defend, indemnify, protect, and save harmless Authority Indemnified Parties shall continue during any periods of occupancy or of holding over by Lessee, its agents, officers, employees, licensees, concessionaires, permittees or Sublessees, beyond the expiration of the Term or other termination of this Lease.

Lessee shall include a provision comparable to the preceding paragraph in each Sublease (excluding Subleases for individual residential units) so that each Sublessee agrees to defend, indemnify, protect, and save harmless the Authority Indemnified Parties as provided herein.

28. **INSURANCE**.

Without limiting Lessee's indemnification of the Authority Indemnified Parties set forth in Article 8, Lessee shall maintain or cause to be maintained, and keep in full force and effect, the following insurance coverages. Such insurance relates to Lessee's performance and operations and shall be primary to and not contributing with any insurance or self-insurance programs maintained by any of the Governing Entities, and such coverages shall be provided and maintained at Lessee's own expense.

28.1 **Policy Requirements**.

28.1.1 Commercial General Liability Insurance. A policy of commercial general liability insurance (written on ISO policy form CG 00 01 or its equivalent) with limits of not less than the following:

General Aggregate:	$25,000,000
Products/Completed Operations Aggregate:	$25,000,000
Personal and Advertising Injury:	$1,000,000
Each Occurrence:	$5,000,000

Such policy shall protect the Governing Entities as additional insureds against incurring any legal cost in defending claims for alleged loss subject to all the terms and conditions of the commercial general liability policy. Excess insurance that complies with the general insurance requirements set forth in Section 9.2 below may be used to provide the required coverage limits.

28.1.2 Automobile Liability Insurance. Lessee shall require contractors and other parties working on the Premises to have commercial automobile liability insurance written on ISO policy form CA 00 01 or its equivalent, with a limit of liability of not less than Two Million Dollars ($2,000,000) per accident, including coverage for any owned, hired or non-owned automobiles, or coverage for "any auto." If and when valet parking services are provided at the Premises, Lessee shall also require Garagekeeper's Legal Liability coverage of the valet or parking operating services company (written on ISO form CA 99 37 or its equivalent) with limits of not less than Three Million Dollars ($3,000,000). Lessee's excess liability insurance policies shall also apply to commercial automobile liability.

28.1.3 Worker's Compensation and Employer's Liability Insurance. Worker's compensation insurance with limits and statutory limits not less than those required by the Labor Code of the State of California and federal statute, if applicable, and covering all persons employed by Lessee and Lessee's contractors in the conduct of its operations on the Premises (including the "all states" and volunteers endorsements, if applicable), including Employer's Liability insurance coverage including illness, injury and disease in limits not less than One Million Dollars ($1,000,000).

28.1.4 Liquor Liability Insurance. If and when the distribution, sale or service of alcoholic beverages occurs on the Premises by a sublessee of the Retail Improvements, Lessee shall provide Liquor Liability insurance (written on ISO policy form CG 00 33 or 34 or their equivalent) with a liability limit of not less than Five Million Dollars ($5,000,000) per occurrence and an annual aggregate of Ten Million Dollars ($10,000,000). If written on a

"claims made" form, the coverage shall also provide an extended two (2) year reporting period commencing upon the expiration or earlier termination of this Lease.

28.1.5 Commercial Property Insurance. A policy of insurance to cover damage to the Project including improvements and betterments, from perils covered by the Causes-of-Loss Special Form (ISO form CP 1030) or its equivalent, including flood (flood shall have a sub-limit of $20,000,000), earthquake (with coverage levels based on probable maximum loss analysis as set forth in a seismic analysis prepared by a licensed engineer and if coverage is available at reasonable rates as agreed to by Lessee and the Governing Entities), and ordinance or law Coverage (ordinance or law shall have a sub-limit of $5,000,000) written for the full replacement value of the Project including any and all Improvements, with a deductible no greater than $250,000 (adjusted by CPI) or 5% of the property values whichever is less (except for earthquake deductible which shall not exceed 5% of the insured unit value). Such policy of insurance shall also include boiler and machinery coverages, and business interruption coverage, including loss of rents equal to eighteen (18) months of rent. Insurance proceeds will be payable to the Lessee, Authority, CRA, City and County as their interests may appear and will be utilized for repair and restoration of the Project.

28.1.6 Insurance During Construction. During the construction of any Alterations, Lessee shall maintain or cause to be maintained, and keep in full force and effect, the following insurance coverages:

(1) Builder's Risk Course of Construction. Such coverage shall: (a) insure against damage from perils covered by the Causes-of-Loss Special Form (ISO form CP 1030) or its equivalent, and be endorsed to include earthquake, flood (flood shall have a sub-limit of $20,000,000), ordinance or law coverage (ordinance or law shall have a sub-limit of $5,000,000), coverage for temporary offsite storage, debris removal, pollutant cleanup (pollutant cleanup shall have a sub-limit of $100,000) and removal, preservation of property, excavation costs, landscaping, shrubs and plants, full collapse coverage during construction (without restricting collapse coverage to specified perils). Such insurance shall (i) be extended to include boiler and machinery coverage for air conditioning, heating and other equipment during testing, covering the entire value of materials and equipment in transit, and (ii) be written on a completed-value basis (except the earthquake coverage (which shall be based on probable maximum loss analysis as set forth in a seismic analysis prepared by a licensed engineer and if coverage is available at reasonable rates)) and cover the entire value of the construction project, including materials and equipment, against loss or damage until completion and acceptance of the construction by the Authority.

(2) General Liability Insurance. Such coverage shall be written on ISO policy form CG 00 01 or its equivalent with limits of not less than Twenty-Five Million Dollars ($25,000,000) per occurrence, Fifty Million Dollars ($50,000,000) policy aggregate and Fifty Million Dollars ($50,000,000) products/completed operations aggregate. The products/completed operations coverage shall continue to be maintained in the amount indicated above for at least ten (10) years after the issuance of a Certificate of Completion for the Alterations. Such insurance shall be an occurrence based policy with no "On Going Operations Endorsement" and "Close of Escrow Coverage Forms." Excess insurance that complies with the

general insurance requirements set forth in Section 9.2 below may be used to provide the required coverage limits.

(3) Errors and Omissions. Lessee shall cause all architects, engineers and other design professionals providing services in connection with the Improvements to carry Professional Liability Insurance covering errors, omissions, negligent or wrongful acts. The limits of coverage required shall be (a) Five Million Dollars ($5,000,000) with respect to the prime architect and engineer for the Improvements, and (b) One Million Dollars ($1,000,000) with respect to each other architect, engineers, surveyor or other licensed professional rendering services in connection with design or construction on the Premises. The coverage shall also provide an extended two (2) year reporting period commencing upon termination or cancellation of the errors and omissions coverage.

(4) Worker's Compensation and Employer's Liability Insurance. Such coverage shall provide workers compensation benefits, as required by the Labor Code of the State of California. Such policy shall be endorsed to waive subrogation against the Governing Entities for injury to Lessee, contractors' and subcontractors' employees. In all cases, such insurance shall include Employer's Liability insurance coverage including illness, injury and disease in limits not less than One Million Dollars ($1,000,000).

(5) Asbestos Liability or Contractors Pollution Liability Insurance. If construction requires remediation of asbestos or pollutants, and if such insurance is available, such insurance shall cover liability for personal injury and property damage arising from the release, discharge, escape, dispersal or emission of asbestos or pollutants, whether gradual or sudden, and include coverage for costs and expenses associated with voluntary clean-up, testing, monitoring and treatment of asbestos or pollutant(s) in compliance with governmental mandate or order. If the asbestos or pollutant will be removed from the Premises, asbestos or pollutant liability shall also be required under the contractor's or subcontractor's Automobile Liability Insurance. Coverage limits shall be as reasonably required and mutually agreed upon by Lessee and the Authority or its designated representative.

(6) Automobile Liability Insurance. Lessee shall require contractors and other parties working on the Project to have commercial automobile liability insurance written on ISO policy form CA 00 01 or its equivalent, with a limit of liability of not less than Five Million Dollars ($5,000,000) per accident, including coverage for any owned, hired or non-owned automobiles, or coverage for "any auto." Lessee's excess liability insurance policies shall also apply to commercial automobile liability.

28.1.7 Modifications to Coverages. The Authority reserves the right throughout the Term of this Lease, to require reasonable changes to the limits and types of insurance coverage required hereunder based on accepted risk management principles by giving Lessee ninety (90) days prior written notice of such change, provided such requirements are commercially available and are what is customarily maintained by comparable developers of comparable projects.

28.2 **General Insurance Requirements**.

28.2.1 Insurance Companies. Insurance required to be maintained pursuant to this Article 9 shall be written by companies authorized to do business in California and having a "General Policyholders Rating" of at least A:VIII (or such higher rating as may be required by a Mortgagee) as set forth in the most current issue of "Best's Key Rating Guide."

28.2.2 Certificates of Insurance. Lessee shall monitor the insurance of Lessee's contractors and design professionals and maintain proof of such insurance during construction. Lessee shall deliver to Authority certificates of insurance with original additional insured endorsements as indicated in Section 9.2.3 below, for all coverages required by this Article 9. The certificates and endorsements of each insurance policy shall be on forms reasonably acceptable to Authority and signed by a person authorized by the insurer to bind coverage on its behalf and provided prior to commencing any activities on the Premises.

28.2.3 Additional Insureds. All policies of insurance required hereunder (other than worker's compensation insurance and professional liability insurance) shall name Authority, the CRA, the City, and the County as additional insureds as their respective interests may appear. The policy required under Section 9.1.1 above shall provide for severability of interest.

28.2.4 Excess Coverage. Any umbrella liability policy or excess liability policy shall be in "following form" and shall contain a provision to the effect that, if the underlying aggregate is exhausted, the excess coverage will drop down as primary insurance.

28.2.5 Notification of Incidents. Lessee shall promptly notify Authority of the occurrence of any accidents or incidents in connection with the Premises that could give rise to a claim under any of the insurance policies required under this Article 9. Lessee shall notify its insurer of the occurrence of any accidents or incidents in connection with the Premises within the time periods required under each insurance contract and shall provide a copy thereof to Authority upon request by Authority.

28.2.6 Full Insurable Value. The term "**full insurable value**" shall mean the actual replacement cost (without deduction for depreciation) of the Improvements immediately before such casualty or other loss, including the cost of construction of the Improvements, architectural and engineering fees, and inspection and supervision. Lessee shall make available upon request, to Authority, for its review and approval all documents, data and resources used in determining the full insurable value.

28.2.7 No Cancellation. All policies of insurance shall not be subject to cancellation, reduction in coverage, or nonrenewal except after notice in writing by Lessee shall have been sent to Authority not less than thirty (30) days prior to the effective date of cancellation, nonrenewal, amendment or reduction in coverages (except in the case of cancellation for nonpayment of premium in which case cancellation shall not take effect until at least ten (10) days' written notice has been given to each additional insured).

28.2.8 Premiums. Lessee agrees to pay all premiums timely for all insurance required by this Article 9 and, at its sole cost and expense, to comply and secure compliance with all insurance requirements necessary for the maintenance of such insurance.

28.2.9 Blanket Policies. The insurance described in this Article 9 may be carried under a blanket policy or policies covering other liabilities and locations of Lessee, in form, amount and content reasonably satisfactory to the Authority, provided such coverage provides the same protection as if the insurance had been procured on an individual location basis.

28.2.10 Waiver of Subrogation. Lessee agrees to release the Authority Indemnified Parties and waive its rights of recovery against the Authority Indemnified Parties under the insurance policies specified in this Lease. Lessee shall ensure that each policy of property insurance includes a waiver of subrogation against the Authority Indemnified Parties.

28.2.11 Notice. Lessee shall send all required insurance information to Authority at the address set forth in Section 15.10 with a copy to the CRA at 1200 W. 7th Street, Los Angeles, California 90017 (Attention: Risk Manager) and to the County at 500 W. Temple Street, Room 713, Los Angeles, California 90012 (Attention: Chief Administrative Officer).

28.2.12 Self-Insured Retentions (SIR) or Deductibles. Lessee shall identify any SIR or deductibles that exceed $25,000. Authority retains the right to require Lessee to provide a bond or other security to guarantee payment of all such retained losses and cost attributable to Lessee's SIR or deductible.

28.3 **Disbursement of Proceeds**. Upon the occurrence of any loss, the property insurance proceeds shall be held by Authority in trust for the named insureds as their interests appear, and shall be disbursed by Authority on a monthly basis to pay for work completed in accordance with then-prevailing industry custom and practice. In the event of such loss Lessee shall be obligated to rebuild or replace the destroyed or damaged buildings, structures, equipment, and Improvements, in accordance with the procedures set forth hereinabove for the initial construction, except as otherwise provided in Article 10 hereof. Any surplus or proceeds after said rebuilding or replacement shall be distributed to Lessee. Notwithstanding anything to the contrary set forth in this Section 9.3, the Authority acknowledges that the first-priority leasehold Mortgagee that is an Institutional Lender may request the right to hold the insurance proceeds in trust and disburse such proceeds pursuant to the terms of its Mortgage, and the Authority agrees not to unreasonably withhold its consent to such a request, if such Mortgagee, in the reasonable judgment of the Authority, has the necessary qualifications and experience to competently serve in such capacity. The Authority hereby approves Citibank, N.A. as a Mortgagee satisfying the conditions set forth in the foregoing sentence.

28.4 **Failure to Maintain Coverage**. Failure of Lessee to procure, maintain or renew the herein required insurance shall, if not cured within ten (10) business days after written notice from Authority, constitute a default hereunder. In the event of such failure, in addition to the other rights and remedies provided hereunder, Authority may, at its discretion, procure or renew such insurance and pay any and all premiums in connection therewith. Authority shall be entitled to reimbursement for all actual costs incurred by the Authority in the procurement or renewal of such insurance, with interest thereon at the Applicable Rate, within five (5) business days after written demand by Authority.

29. MAINTENANCE AND REPAIR; DAMAGE AND DESTRUCTION.

29.1 **Lessee's Maintenance and Repair Obligations**. Lessee shall maintain the Premises, including paved or unpaved ground surfaces, plazas, walkways, pedestrian and vehicular access areas, and Improvements thereon, and the Offsite Publicly Owned Improvements, in conformance with such reasonable rules and regulations regarding the use and occupancy of commercial projects in downtown Los Angeles (such as the Premises) as may be promulgated by Authority and/or County and/or CRA and/or City from time to time for general applicability on a non-discriminatory basis, as revised from time to time. Without limiting the foregoing, at Lessee's sole cost and expense, but subject to the terms and conditions of this Lease, Lessee shall keep and maintain, or cause to be kept and maintained, the Premises and all equipment, Improvements or physical structures of any kind which may exist or be erected, installed or made on the Premises and the Offsite Publicly Owned Improvements in good and substantial repair and condition, including without limitation capital improvements and structural and roof repairs and replacements, and shall make all necessary repairs and alterations and replacements thereto, except as otherwise provided in this Article 10. Lessee shall undertake such repairs, alterations or replacements in compliance with applicable Laws, and in compliance with the provisions of Article 5, to the extent applicable. Lessee shall maintain all Improvements on the Premises and the Offsite Publicly Owned Improvements in a safe, clean, wholesome and sanitary condition, to the reasonable satisfaction of Director and in compliance with all applicable Laws. Lessee shall, at its own cost and expense, install, maintain and replace landscaping between the streets abutting the Premises and the building footprints on the Premises as is reasonably necessary to create a pleasing development to the reasonable satisfaction of Director. Lessee specifically agrees to provide proper containers for trash and garbage which are screened from public view, to keep the Premises free and clear of rubbish and litter. Authority in its proprietary capacity shall have the right to enter upon and inspect the Premises at any reasonable time for cleanliness, safety and compliance with this Section 10.1, as long as such entrance is not done in a manner which would unreasonably interfere with the operation of the Premises. CRA hereby grants to Lessee the ongoing right to access the Offsite Publicly Owned Improvements, subsequent to their completion, for the limited purpose of fulfilling Lessee's maintenance and repair obligations hereunder. Lessee's obligation to maintain and restore is absolute, and is not in any way dependent upon the existence or availability of insurance proceeds, except as otherwise provided in this Article 10. Restoration shall take place in accordance with the provisions of Article 5.

29.2 **Maintenance Deficiencies**. If Authority provides written notice to Lessee of a deficiency or other breach in the performance by Lessee of the maintenance and repair obligations of Lessee under Section 10.1 above, then Lessee shall promptly commence the cure thereof and shall complete such cure within the time period for such cure set forth in the Authority's deficiency notice, which cure period shall not be less than thirty (30) days except if the deficiency pertains to a condition that is a threat to health or safety or otherwise constitutes an emergency situation, in which case Authority shall have the right to immediately require Lessee to take all appropriate steps to avoid damage or injury. If Lessee fails to cure any such deficiency within the cure period set forth in Authority's deficiency notice (which cure period shall comply with the requirements of the immediately preceding sentence of this Section 10.2), then in addition to, and not in lieu of, any rights or remedies that Authority may have under Article 13 of this Lease for defaults not cured within the applicable notice and cure periods set forth therein, Lessee shall pay to Authority an amount equal to Five Hundred Dollars ($500.00)

per day per item of deficiency for each day after such cure period that the deficiency item remains uncured; provided, however, if the nature of the deficiency is such that it is not capable of cure within the cure period specified in Authority's notice (for example, as a result of permitting requirements or construction material procurement delays beyond the control of Lessee), then as long as during the specified cure period Lessee commences the cure of the deficiency and thereafter continues the prosecution of the completion of such cure in a manner and with such diligence that will effectuate the cure in as short a period as reasonably possible, then the cure period specified in Authority's deficiency notice shall be extended for such additional time as necessary to complete the cure in as short a period as reasonably possible.

For purposes of determining the number of items of deficiency set forth in a deficiency notice received from the Authority, Authority shall reasonably identify the separate deficiencies so as not to unfairly increase the daily amount payable under this Section 10.2 by separating the work into unreasonably particularized items (e.g., the requirement to paint the exterior of a building shall not be split into individual deficiency items for the painting of each individual door, window or other component of such building). If a cited deficiency is not health or safety related and does not otherwise constitute an emergency, and if in the reasonable and good faith business judgment of Lessee the deficiency notice was erroneously issued by Authority, then Lessee shall have the right to contest such deficiency notice by written notice to Director within five (5) business days after the date the deficiency notice is received by Lessee. If Lessee files any such contest with Director, then Director shall have the right, in the exercise of Director's discretion, to consider such contest. If Lessee's contest is made on a reasonable and good faith basis, then the cure period for the deficiency notice shall be tolled during the period between the date Director receives written notice of such contest and continuing until Director notifies Lessee in writing that either Director denies Lessee's contest or that Director has determined not to consider such contest. The Five Hundred Dollars ($500.00) per diem amount set forth in this Section 10.2 shall be adjusted every three (3) years during the remaining Lease Term on each third (3rd) anniversary of the Commencement Date to reflect any change in the CPI over the three (3) year period immediately preceding each such adjustment.

29.3 **Option to Terminate Under Certain Circumstances**. In the event of any damage to or destruction of the Premises, or any Improvements located thereon, Lessee shall, except as otherwise expressly provided in this Section 10.3, promptly (taking into consideration the necessity of obtaining approvals and permits for such reconstruction) repair and/or restore such Improvements to their condition existing prior to the damage or destruction. Except as otherwise expressly provided in this Section 10.3, such obligation to repair and restore is absolute, and is in no way dependent upon the existence or availability of insurance proceeds. Repair and restoration of any damage or destruction shall take place in accordance with the provisions of Article 5.

Notwithstanding the foregoing, provided that Lessee complies with all of the provisions of Subsections 10.3.1 through 10.3.4 below, Lessee shall have the option, subject to Section 12.5, to terminate this Lease and be relieved of the obligation to restore the Improvements on the Premises if (i) all or substantially all of the Improvements on the Premises are substantially damaged or destroyed and such damage or destruction resulted from a cause not insured against by Lessee and not required to be insured against by Lessee under this Lease (an "**Uninsured Loss**"), or (ii) during the last five (5) years of the Term the Improvements on the

Premises are damaged or destroyed and the cost of repair and restoration exceeds twenty-five percent (25%) of the total replacement cost of all of the Improvements on the Premises immediately prior to the damage or destruction. The following shall be conditions precedent to Lessee's right to terminate this Lease and be relieved of the obligation to restore the Improvements on the Premises pursuant to this paragraph:

29.3.1 No more than one hundred (100) days following the date of the damage or destruction Lessee shall notify Authority of its election to terminate this Lease; to be effective, this notice must include both a copy of Lessee's notification to each Mortgagee, if any, of Lessee's intention to exercise this option to terminate and Lessee's certification under penalty of perjury that Lessee has delivered or mailed such notification to the Mortgagee in accordance with this Subsection 10.3.1. Authority shall be entitled to rely upon the foregoing notice and certification as conclusive evidence that Lessee has notified the Mortgagee regarding Lessee's desire to terminate this Lease.

29.3.2 Subject to the rights of any Mortgagee (in order of priority) under its Mortgage, upon a termination in accordance with Subsection 10.3.1, Lessee shall assign to Authority and Authority shall be entitled to retain all insurance proceeds payable in connection with the event of damage or destruction, and, if requested by Authority Lessee shall, no more than sixty (60) days following the giving of the notice required by Subsection 10.3.1 or such longer time as may be reasonable under the circumstances, remove all debris and other rubble from the Premises; secure the Premises against trespassers, and, at Authority's election, remove all remaining Improvements from the Premises so that the Premises are surrendered to Authority in the condition required under this Lease on the expiration or earlier termination thereof. If Authority shall require Lessee to demolish and remove from the Premises the remaining Improvements, Authority shall make available to Lessee any insurance proceeds received from Lessee's insurance necessary to pay for the cost of such demolition and removal, but no shortfall in the amount of such insurance proceeds shall relieve Lessee of its obligations under this Subsection 10.3.2. Notwithstanding anything to the contrary set forth in this Subsection 10.3.2, the Authority acknowledges that the first-priority leasehold Mortgagee that is an Institutional Lender may request the right to hold the insurance proceeds in trust and disburse such proceeds pursuant to the terms of its Mortgage, and the Authority agrees not to unreasonably withhold its consent to such a request, if such Mortgagee, in the reasonable judgment of the Authority, has the necessary qualifications and experience to competently serve as in such capacity.

29.3.3 If within ten (10) days following Authority's receipt of the notice referred to in Subsection 10.3.1, Authority has not received a written notice from the Mortgagee, if any, objecting to the termination of this Lease or an agreement containing an effective assignment of Lessee's interest in this Lease to such Mortgagee whereby such Mortgagee expressly assumes and agrees to be bound by and perform all of Lessee's obligations under this Lease, Lessee shall deliver to Authority a quitclaim deed to the Improvements in recordable form, in form and content satisfactory to Authority and/or with such other documentation as may be reasonably requested by Authority or any title company on behalf of Authority, terminating Lessee's interest in the Premises and reconveying such interest to Authority free and clear of any and all Mortgages and Subleases.

29.4 **No Option to Terminate for Other Casualty**. Except as expressly provided in Section 10.3 above, Lessee shall have no option to terminate this Lease or otherwise be relieved of its obligation to restore the Improvements on the Premises in the case of any damage to or destruction of the Premises or the Improvements located thereon.

29.5 **No Authority Obligation to Make Repairs**. Authority shall have no obligation whatsoever to make any repairs or perform any maintenance on the Premises.

29.6 **Repairs Not Performed by Lessee**. If Lessee fails to make any repairs or replacements as required, Director may notify Lessee of said failure in writing, and should Lessee fail to cure said failure and make repairs or replacements within a reasonable time as established by Director, Authority may make such repairs or replacements and the cost thereof, including, but not limited to, the cost of labor, overhead, materials and equipment, shall be charged against Lessee as provided in Section 13.5.

29.7 **Other Repairs**. Although having no obligation to do so, Authority may, at its own cost and at its sole discretion, perform or permit others to perform any necessary filling, grading or repair of utility systems, sewer facilities, roads, or other public facilities on or about the Premises.

29.8 **Notice of Damage**. Lessee shall give prompt notice to Authority of any fire or damage affecting the Premises from any cause whatsoever.

29.9 **Waiver of Civil Code Sections**. The parties' rights shall be governed by this Lease in the event of damage or destruction. The parties hereby waive the provisions of California Civil Code Section 1932 and any other provisions of law which provide for contrary or additional rights.

30. TRANSFERS.

30.1 Transfer Restrictions and Procedures.

30.1.1 Rationale. Lessee represents that it is entering into this Lease for the purposes of the redevelopment of the Premises in accordance with the DDA and not for speculation in land holding. Lessee further recognizes that, in view of the importance of the redevelopment of the Premises to the general welfare of the community, the qualifications and identity of Lessee, and its respective principals and personnel, are of particular concern to Authority. Therefore, no voluntary or involuntary successor-in-interest of Lessee shall acquire any rights or powers under this Lease or in the Premises except as specifically set forth herein.

30.1.2 Prohibition on Transfers.

(1) Except as specifically permitted herein, Lessee shall not cause or permit any sale, transfer, conveyance, assignment, lease, sublease, hypothecation, mortgage or pledge (each of the foregoing being referred to in this Lease as a "**Transfer**") of this Lease or of the Premises or the Improvements, or any interest therein, shall be subject to the requirements of

Section 11.3. Lessee acknowledges that the consent to a Transfer by Authority shall be subject to Authority obtaining the prior consent to such Transfer by the County and the CRA.

(2) The term "Transfer" shall include (i) with respect to a partnership or limited liability company, the withdrawal or change, voluntary, involuntary or by operation of law, of twenty-five percent (25%) or more of the partners or members, or transfer of twenty-five percent or more of partnership or membership interests, within a twelve (12)-month period, or the dissolution of the partnership or limited liability company without immediate reconstitution thereof, and (ii) with respect to a closely held corporation (i.e., whose stock is not publicly held and not traded through an exchange or over the counter), (A) the dissolution, merger, consolidation or other reorganization of such corporation or, (B) the sale or other transfer of more than an aggregate of twenty-five percent (25%) of the voting shares of the corporation (including to immediate family members by reason of gift or death) within a twelve (12)-month period, or (C) the sale, mortgage, hypothecation or pledge of more than an aggregate of twenty-five percent (25%) of the value of the unencumbered assets of the corporation within a twelve (12)-month period. The term "Transfer" shall also include a change in Control (as defined in Section 1.2 above) of the subject entity.

30.1.3 Permitted Transfers.

Notwithstanding Section 11.1.2, the following Transfers shall be permitted without Authority's consent on the terms and conditions hereafter set forth:

(1) Space Leases in the Ordinary Course of Business. The leasing of space within the Premises to Sublessees in the ordinary course of business, including, but not limited to, leases of individual residential units and lease of the Retail Improvements. Long term ground leases or other leases or contracts which in effect serve to Transfer to the transferee Lessee's economic interest in the Premises or a substantial portion thereof shall not be deemed to be "in the ordinary course of business";

(2) Foreclosure Transfers. Foreclosure Transfers for which Authority's consent is not required pursuant to Section 12.2.2;

(3) Permanent or Construction Loans from Institutional Lenders. The granting of a Mortgage to an Institutional Lender to secure construction or permanent financing for Phase IIB and any refinancing loan which refinances a permitted financing, and the exercise of remedies under such Mortgage as permitted under this Lease. All other Mortgages shall be subject to approval in accordance with Section 12.1; and

(4) Pledge of Managing Member Interests. The pledge of the managing member interests in Lessee to [**Citibank, N.A. and/or STRS**] pursuant to that certain **[Pledge Agreements to be expressly identified**] and exercise of the pledgee's rights under such pledge agreements.

If Authority consents to a Transfer, (i) the terms and conditions of this Lease shall in no way be deemed to have been waived or modified and (ii) such consent shall not be deemed consent to any further Transfer by either Lessee or a transferee. Except as specifically provided herein, without the specific written agreement of Authority, no Transfer permitted hereunder or

approved by Authority shall operate to release or excuse Lessee from any obligations or liability under or in connection with this Lease or any other Project Document.

30.1.4 Transfer Procedures.

At least sixty (60) days prior to any proposed Transfer pursuant to this Article 11, Lessee shall furnish Authority with (i) a written notice of such proposed Transfer, (ii) such evidence as Authority may request in its commercially reasonable discretion demonstrating that the proposed Transfer and transferee satisfy the criteria set forth herein applicable to such Transfer and transferee (including certified financial statements and other information concerning the proposed transferee or joint venture partner and, in the case of a Transfer to a qualified joint venture, a copy of the proposed joint venture agreement, provided that truly confidential information in such joint venture agreement that is not required by the Authority or the CRA in order to make an informed decision about such transferee may be redacted), and (iii) a copy of a proposed assignment or transfer document reasonably satisfactory to Authority pursuant to which the transferee assumes, for the benefit of Authority, the obligations of Lessee arising from and after the date of Transfer applicable to the interest transferred, including the obligations of Lessee under this Lease. Authority's approval over any such Transfer shall verify that the proposed Transfer and transferee satisfy the applicable requirements set forth herein and its approval of the proposed assignment and assumption instrument to be entered into by the transferee. No Transfer by Lessee shall release Lessee from its obligations under the Phase IIB REA to the extent such obligations arose prior to the date of such Transfer. Whether or not the Authority consents to any proposed Transfer, Lessee shall pay the Authority's review and processing fees, as well as any reasonable legal fees incurred by the Authority, within thirty (30) days after written request by the Authority.

30.2 **Reserved.**.

30.3 **Transfers**.

30.3.1 Reserved.

30.3.2 Transfers After Completion.

(1) The Authority will, subject to the satisfaction of the conditions set forth in this Section 11.3.2, at Lessee's request, consent to (i) an assignment of this Lease to a successor-in-interest to Lessee that is a Qualified Owner, or (ii) a transfer of ownership interests in Lessee provided that Lessee will remain a Qualified Owner subsequent to the completion of such Transfer.

(2) A party shall be a "**Qualified Owner**" only if such party (X) has adequate capitalization and liquidity to perform its duties under this Lease, including, without limitation, maintaining and operating the Premises in the first class manner required by this Lease; (Y) has (or at all times retains a management entity that has or whose principals have individually) at least ten (10) years of experience in owning and operating similar first class improvements in a high-rise, mixed use environment in an urban core area in a major city in the United States and has an office in Los Angeles; and (Z) has a good reputation in the real estate community.

(3) As a condition precedent to any consent by the Authority pursuant to Section 11.3.2(1), at least sixty (60) days prior to the proposed effective date of the Transfer, Lessee shall furnish to Authority (i) such evidence as Authority may request, in its commercially reasonable discretion, demonstrating that the proposed assignee is (or that Lessee will remain, as applicable) a Qualified Owner (including certified financial statements of and other information concerning the proposed assignee or Lessee, as applicable); (ii) an estoppel certificate from Lessee confirming that to Lessee's knowledge there is no default under this Lease, (iv) a release by Lessee of any suits, claims or obligations of Authority or CRA under this Lease with respect to the Premises, (v) a certificate from the proposed assignee or Lessee, as the case may be, in favor of Authority setting forth the basis on which the proposed assignee is (or Lessee will remain, as applicable) a Qualified Owner; (vi) if applicable, an executed assignment of the Phase IIB REA in favor of the proposed assignee and an executed assignment of the Public Plaza REA in favor of the proposed assignee; (vii) if applicable, evidence of release of the Premises from the lien of the Mortgage, or if the Premises is not released from the lien of the Mortgage in connection with such Transfer, a written consent from the Institutional Lender holding the Mortgage consenting to the Transfer of the Premises to the assignment of this Lease and confirming that Lessee is not in default of its obligations under the loan secured by the Mortgage.

(4) Lessee shall pay all costs and expenses incurred by Authority in reviewing, documenting and negotiating any documentation in connection with an assignment of this Lease or transfer of ownership interests in Lessee, as well as any and all other out-of-pocket costs and expenses, including reasonable attorneys' fees, incurred by Authority in connection with the same. Lessee shall be responsible for the payment of all costs and expenses incurred due to necessary modifications to the title insurance policies for this Lease and for the CRA-Authority Lease. Upon consent to an assignment of this Lease to a Qualified Owner, Lessee will be released from its obligations under this Lease arising after the effective date of such assignment.

31. **MORTGAGES**.

31.1 **Authority Approval Required.**

All Mortgages other than first priority Mortgages to an Institutional Lender to secure construction or permanent financing for Phase IIB (and any refinancing thereof) shall be subject to the approval of the Authority in accordance with this Section 12.1. Lessee shall provide the Authority with copies of proposed loan documents for construction loans and permanent loans at least fifteen (15) days prior to Lessee's desired loan closing date. Authority shall have the right to approve any loan from a non-Institutional Lender or that is secured by a Mortgage that is not a first priority lien on the Premises, such approval not to be unreasonably withheld, provided that such approval shall be limited to (i) confirming that the total loan to value ratio does not exceed eighty-five percent (85%) (including debt secured by pledges of equity interests in Lessee), (ii) reasonably approving any rights of the lender to seek to replace Lessee, and (iii) approving any rights and obligations Authority may have under such loan documents. Lessee shall pay the Authority's review and processing fees, as well as any

reasonable legal fees incurred by the Authority with respect to review of such loan documents, within thirty (30) days after written request by Authority. Notwithstanding anything to the contrary contained herein, the Authority hereby approves the Letter of Credit and all Mortgages executed in connection therewith (including, but not limited to, the deed of trust delivered by Lessee to STRS in connection with the Letter of Credit).

31.2 **Foreclosure Transfers**.

31.2.1 Definitions. As used herein, a "**Foreclosure Transfer**" shall mean any transfer of the entire leasehold estate under this Lease or of all of the ownership interests in Lessee pursuant to any judicial or nonjudicial foreclosure or other enforcement of remedies under or with respect to a Mortgage, or by voluntary deed or other transfer in lieu thereof. A "**Foreclosure Transferee**" shall mean any transferee (including without limitation a Mortgagee) which acquires title to the entire leasehold estate under this Lease or to all of the ownership interests in Lessee pursuant to a Foreclosure Transfer.

31.2.2 Foreclosure Transfer. The consent of Authority shall not be required with respect to any Foreclosure Transfer.

31.2.3 Subsequent Transfer By Mortgagee. For each Foreclosure Transfer in which the Foreclosure Transferee is a Mortgagee (or its designee), with respect to a single subsequent transfer of this Lease or the ownership interests in Lessee (as applicable) by such Mortgagee to any third party, (i) Authority's consent to such transfer shall be required, but shall not be unreasonably withheld or delayed, and the scope of such consent (notwithstanding anything in this Lease to the contrary) shall be limited to Authority's confirmation (which must be reasonable) that the Lessee following such transfer has sufficient experience and has, or is under the control of a person or entity that has, sufficient financial capability to perform its remaining obligations under this Lease as they come due, along with any obligation of Lessee for which the Foreclosure Transferee from whom its receives such transfer is released under Section 12.3.1 below, and (ii) such transferee (other than a transferee of ownership interests) shall expressly agree in writing to assume and to perform all of the obligations under this Lease, other than Excluded Defaults (as defined below). For clarification purposes, the right to a single transfer under this Section shall apply to each Foreclosure Transfer in which the Foreclosure Transferee is a Mortgagee, so that there may be more than one “single transfer” under this Section.

31.3 **Effect of Foreclosure**. In the event of a Foreclosure Transfer, the Mortgagee shall forthwith give notice to Authority in writing of such transfer setting forth the name and address of the Foreclosure Transferee and the effective date of such transfer, together with a copy of the document by which such transfer was made.

31.3.1 An Institutional Lender, shall, upon becoming a Foreclosure Transferee (other than a transferee of ownership interests in Lessee), become liable to perform the full obligations of Lessee under this Lease (other than Excluded Defaults as defined below) accruing during its period of ownership of the leasehold; provided, however, that such Institutional Lender’s liability hereunder shall be limited to its interest in the Improvements, the Premises and this Lease. Upon a subsequent transfer of the leasehold in accordance with Section 12.2.3 above,

such Institutional Lender shall be automatically released of any further liability with respect to this Lease, other than for (i) First Sale Profit Payment Rent payments, property tax payments, reserve account payments and other monetary obligations under specific terms of this Lease that accrue solely during such Institutional Lender's period of ownership of the leasehold, and (ii) Lessee's indemnification obligations under this Lease with respect to matters pertaining to or arising during such Institutional Lender's period of ownership of leasehold title.

31.3.2 Any other Foreclosure Transferee (i.e., other than an Institutional Lender as provided in Section 12.3.1 above) shall, upon becoming a Foreclosure Transferee (other than a transferee of the ownership interests in Lessee), become liable to perform the full obligations of Lessee under this Lease (other than Excluded Defaults).

31.3.3 Following any Foreclosure Transfer which is a transfer of the leasehold interest under this Lease, Authority shall recognize the Foreclosure Transferee as the Lessee under this Lease and shall not disturb its use and enjoyment of the Premises, and the Foreclosure Transferee shall succeed to all rights of Lessee under this Lease as a direct lease between Authority and such Foreclosure Transferee, provided that the Foreclosure Transferee cures any pre-existing Event of Default other than any such pre-existing Event of Default that (i) is a pre-existing incurable non-monetary default, (ii) is a non-monetary default that can only be cured by a prior lessee, or (iii) is otherwise personal to and only curable by a prior lessee, including without limitation any breach of Section 7.1 or any other net worth requirement contained herein (collectively, "**Excluded Defaults**"), and thereafter performs the full obligations of Lessee under this Lease. Pursuant to Section 12.3.6 below, following any Foreclosure Transfer which is a transfer of ownership interests in Lessee, the foregoing rights under this Section 12.3.3 shall also inure to the benefit of the Lessee.

31.3.4 No Mortgagee shall become liable to Authority for any of Lessee's obligations under this Lease unless and until such Mortgagee becomes a Foreclosure Transferee with respect to Lessee's leasehold interest under this Lease.

31.3.5 No Foreclosure Transfer, and no single subsequent transfer by a Mortgagee following a Foreclosure Transfer pursuant to Section 12.2.3, shall trigger (i) any acceleration of any financial obligation of Lessee under this Lease, (ii) any recapture right on the part of Authority, or (iii) any termination right under this Lease. For clarification purposes, the "single subsequent transfer" referred to in the foregoing sentence applies to each Foreclosure Transfer in which the Foreclosure Transferee is a Mortgagee (as more fully explained in Section 12.2.3), so that there may be more than one "single subsequent transfer" benefited by this Section.

31.3.6 Following a Foreclosure Transfer with respect to all of the ownership interests in Lessee, (i) any and all rights, privileges and/or liability limitations afforded to Foreclosure Transferees in this Article 12 or any other provision of this Lease shall also be afforded to Lessee from and after such Foreclosure Transfer, to the same extent as if the Foreclosure Transferee had acquired the leasehold interest of Lessee directly and became the Lessee under this Lease, and (ii) any and all rights, privileges and/or liability limitations afforded to Foreclosure Transferees who are Mortgagees in this Article 12 or any other provision of this Lease shall also be afforded to Lessee from and after such Foreclosure Transfer, to the same

extent as if the Foreclosure Transferee had acquired the leasehold interest of Lessee directly and became the Lessee under this Lease.

31.4 **No Subordination**. Authority's rights in the Premises and this Lease, including without limitation Authority's right to receive First Sale Profit Payment Rent, shall not be subordinated to the rights of any Mortgagee. Notwithstanding the foregoing, a Mortgagee shall have all of the rights set forth in the security instrument creating the Mortgage, to the extent that such rights are not inconsistent with the terms of this Lease, including the right to commence an action against Lessee for the appointment of a receiver and to obtain possession of the Premises under and in accordance with the terms of said Mortgage, provided that all obligations of Lessee hereunder shall be kept current, including but not limited to the curing of all defaults or Events of Default hereunder (other than Excluded Defaults or as otherwise provided herein).

31.5 **Mortgagee Protections**. Provided that any Mortgagee provides Authority with a conformed copy of each Mortgage that contains the name and address of such Mortgagee, Authority hereby covenants and agrees to faithfully perform and comply with the following provisions with respect to such Mortgage:

(1) No Termination. No action by Lessee or Authority to cancel, surrender, or materially modify the terms of this Lease or the provisions of this Article 12 shall be binding upon a Mortgagee without its prior written consent unless the Mortgagee shall have failed to cure a default within the time frames set forth in this Article 12.

(2) Notices. If Authority shall give any Notice of Default to Lessee hereunder, Authority shall simultaneously give a copy of such Notice of Default to the Mortgagee at the address theretofore designated by it. No Notice of Default given by Authority to Lessee shall be binding upon or affect said Mortgagee unless a copy of said Notice of Default shall be given to Mortgagee pursuant to this Article 12. In the case of an assignment of such Mortgage or change in address of such Mortgagee, said assignee or Mortgagee, by written notice to Authority, may change the address to which such copies of Notices of Default are to be sent. Authority shall not be bound to recognize any assignment of such Mortgage unless and until Authority shall be given written notice thereof, a copy of the executed assignment, and the name and address of the assignee. Thereafter, such assignee shall be deemed to be the Mortgagee hereunder with respect to the Mortgage being assigned. If such Mortgage is held by more than one person, corporation or other entity, no provision of this Lease requiring Authority to give Notices of Default or copies thereof to said Mortgagee shall be binding upon Authority unless and until all of said holders shall designate in writing one of their number to receive all such Notices of Default and copies thereof and shall have given to Authority an original executed counterpart of such designation.

(3) Performance of Covenants. The Mortgagee shall have the right to perform any term, covenant or condition and to remedy any default by Lessee hereunder within the time periods specified herein, and Authority shall accept such performance with the same force and effect as if furnished by Lessee; provided, however, that said Mortgagee shall not thereby or hereby be subrogated to the rights of Authority. Notwithstanding the foregoing, nothing herein shall be deemed to permit or authorize such Mortgagee to undertake or continue

the construction or completion of the Improvements without first having expressly assumed Lessee's obligations to Authority or its designee by written agreement satisfactory to Authority.

(4) Default by Lessee. In the event of a default by Lessee, Authority agrees not to terminate this Lease (1) unless and until Lessee's notice and cure periods have expired and Authority thereafter provides written notice of such default to any Mortgagee and such Mortgagee shall have failed to cure such Event of Default within thirty (30) days of delivery of such notice, or if any non-monetary default is not reasonably susceptible of cure within the aforesaid thirty (30) day period then such period shall be extended to a maximum of sixty (60) days provided that Mortgagee shall have commenced to cure such default within the aforesaid thirty (30) day period and shall continue to diligently pursue such cure to completion, and (2) as long as:

(i) In the case of a default which cannot practicably be cured by the Mortgagee without taking possession of the Premises, Mortgagee shall proceed diligently to obtain possession of the Premises as Mortgagee (including possession by receiver) and, upon obtaining such possession, shall proceed diligently to cure such default; and

(ii) In the case of a default which is not susceptible to being cured by the Mortgagee, the Mortgagee shall institute foreclosure proceedings and diligently prosecute the same to completion (unless in the meantime it shall acquire Lessee's right, title and interest hereunder, either in its own name or through a nominee, by assignment in lieu of foreclosure) and upon such completion of acquisition or foreclosure such default shall be deemed to have been cured.

The Mortgagee shall not be required to obtain possession or to continue in possession as Mortgagee of the Premises pursuant to Subsection (i) above, or to continue to prosecute foreclosure proceedings pursuant to Subsection (ii) above, if and when such default shall be cured. Nothing herein shall preclude Authority from exercising any of its rights or remedies with respect to any other default by Lessee during any period of such forbearance, but in such event the Mortgagee shall have all of its rights provided for herein. If the Mortgagee, its nominee, or a purchaser in a foreclosure sale, shall acquire title to Lessee's right, title and interest hereunder and shall cure all continuing defaults which are susceptible of being cured by the Mortgagee or by said purchaser, as the case may be, then prior defaults which are not susceptible to being cured by the Mortgagee or by said purchaser shall no longer be deemed defaults hereunder. References herein to defaults which are "not susceptible of being cured" by a Mortgagee or purchaser (or similar language) shall not be deemed to refer to any default which the Mortgagee or purchaser is not able to cure because of the cost or difficulty of curing such default, but rather shall be deemed to refer only to defaults specifically relating to the identity of Lessee which by their nature can be cured only by Lessee (such as Lessee bankruptcy or a change in control of Lessee).

(5) No Obligation to Cure. Except as set forth herein, nothing herein contained shall require any Mortgagee to cure any default of Lessee hereunder.

(6) Separate Agreement. Authority shall, upon request, execute, acknowledge and deliver to each Mortgagee, an agreement prepared at the sole cost and expense

of Lessee, in form satisfactory to each Mortgagee, between Authority, Lessee and the Mortgagees, agreeing to all of the provisions hereof.

(7) Form of Notice. Any Mortgagee under a Mortgage shall be entitled to receive the notices required to be delivered to it hereunder provided that such Mortgagee shall have delivered to each party a notice substantially in the following form:

> The undersigned, whose address is _____, does hereby certify that it is the Mortgagee (as such term is defined in that certain Ground Lease (the "Lease") dated as of **[**_____, 2012**]** between Grand Avenue M Urban Housing, LLC, and The Los Angeles Grand Avenue Authority, of the parcel of land described on Exhibit A attached hereto, which parcel is ground leased by Authority to Grand Avenue M Urban Housing, LLC (the "Party"). In the event that any notice shall be given of a default of the Party under the Lease, a copy thereof shall be delivered to the undersigned who shall have the rights of a Mortgagee to cure the same, as specified in the Lease. Failure to deliver a copy of such notice shall in no way affect the validity of the notice to the Party, but no such notice shall be effective as it relates to the rights of the undersigned under the Lease with respect to the Mortgage, including the commencement of any cure periods applicable to the undersigned, until actually received by the undersigned.

(8) Estoppel Certificate. Authority shall execute an estoppel certificate in form and substance reasonably satisfactory to the Mortgagee at the time of the initial advance in connection with the construction financing for the Project and from time to time thereafter, upon the reasonable request of the Mortgagee, which estoppel certificate shall include, without limitation, representations by the Authority that (i) this Lease (including all Exhibits attached hereto, which are incorporated by reference) is in full force and effect and unmodified except as expressly disclosed in the estoppel certificate, (ii) there are no known uncured defaults by either party under this Lease (including all Exhibits attached hereto, which are incorporated by reference), and/or (iii) after satisfactory completion of the Project, confirmation that the Project has been completed in accordance with the requirements of this Lease (including all Exhibits attached hereto, which are incorporated by reference).

(9) Further Assurances. Authority and Lessee agree to cooperate in including in this Lease, by suitable amendment, any provision which may be reasonably requested by the Mortgagee or any proposed Mortgagee for the purpose of (i) more fully or particularly implementing the Mortgagee protection provisions contained herein, (ii) adding mortgagee protections consistent with those contained herein and which are otherwise commercially reasonable, (iii) allowing such Mortgagee reasonable means to protect or preserve the security interest of the Mortgagee in the collateral, including its lien on the Premises and the collateral assignment of this Lease and/or (iv) clarifying terms or restructuring elements of the transactions contemplated hereby; provided, however, in no event shall Authority be obligated to materially modify any of Lessee’s obligations or Authority's rights under this Lease in any

manner not already contemplated in this Article 12.

31.6 **New Lease.**

31.6.1 Obligation to Enter Into New Lease. If this Lease is terminated by reasons of bankruptcy, assignment for the benefit of creditors, insolvency or any similar proceedings, operation of law, or an Excluded Default, Authority shall, upon the written request of any Mortgagee with respect to Lessee's entire leasehold estate under this Lease or all of the ownership interests in Lessee (according to the priority described below if there are multiple Mortgagees), enter into a new lease (which shall be effective as of the date of termination of this Lease) with the Mortgagee or an affiliate thereof for the then remaining Term of this Lease on the same terms and conditions as shall then be contained in this Lease, provided that the Mortgagee cures all then existing monetary defaults under this Lease, and agrees to commence a cure of all then existing non-monetary Events of Default (other than Excluded Defaults) within thirty (30) days after the new lease is entered into, and thereafter diligently pursues such cure until completion. In no event, however, shall the Mortgagee be obligated to cure any Excluded Defaults. Authority shall notify all of the Mortgagees of a termination described in this Section 12.6 within thirty (30) days after the occurrence of such termination, which notice shall state (i) that this Lease has terminated in accordance with Section 12.6 of this Lease, and (ii) that the most junior of such Mortgagees has thirty (30) days following receipt of such notice within which to exercise its right to a new lease under this Section 12.6, or else it will lose such right. A Mortgagee's election shall be made by giving Authority written notice of such election within thirty (30) days after such Mortgagee has received the above-described written notice from the Authority. Within a reasonable period after request therefor, Authority shall execute and return to the Mortgagee any and all documents reasonably necessary to secure or evidence the Mortgagee's interest in the new lease or the Premises. From and after the effective date of the new lease, the Mortgagee (or its affiliate) shall have the same rights to a single transfer that are provided in Section 12.2.3 above, and shall enjoy all of the other rights and protections that are provided to a Foreclosure Transferee in this Article 12. Any other subsequent transfer or assignment of such new lease shall be subject to the approval of the Authority. If there are multiple Mortgagees, this right shall inure to the most junior Mortgagee in order of priority; provided, however, if such junior Mortgagee shall accept the new lease, the priority of each of the more senior Mortgagees shall be restored in accordance with all terms and conditions of such Mortgages(s). If a junior Mortgagee does not elect to accept the new lease within thirty (30) days of receipt of notice from Authority, the right to enter into a new lease shall be provided to the next most junior Mortgagee, under the terms and conditions described herein, until a Mortgagee either elects to accept a new lease, or no Mortgagee so elects.

31.6.2 Priority of New Lease. The new lease made pursuant to this Section 12.6 shall have the same priority as this Lease and shall be prior to any mortgage or other lien, charge or encumbrance on Authority's leasehold interest in the Premises, and any future leasehold mortgagee or other future holder of any lien on the leasehold interest in the Premises is hereby given notice of the provisions hereof.

31.7 **Participation in Certain Proceedings and Decisions**. Any Mortgagee shall have the right to intervene and become a party in any arbitration, litigation, condemnation or other proceeding affecting this Lease. Lessee's right to make any election or decision under this

Lease with respect to any condemnation settlement, insurance settlement or restoration of the Premises following a casualty or condemnation shall be subject to the prior written approval of each then existing Mortgagee.

31.8 **Authority's Mortgages and Encumbrances**. Any mortgage, deed of trust or other similar encumbrance granted by Authority upon its leasehold interest in the Premises shall be subject and subordinate to all of the provisions of this Lease and to all Mortgages.

31.9 **No Merger**. Without the written consent of each Mortgagee, the leasehold interest created by this Lease shall not merge with the fee interest in all or any portion of the Premises, notwithstanding that the fee and leasehold interests are held at any time by the same person or entity.

31.10 **Mortgagee Priority**. For avoidance of doubt, in the event of a conflict between or among Mortgagees with respect to the exercise of the rights of Mortgagees under this Lease, the most senior Mortgagee shall control.

32. **DEFAULTS.**

32.1 **Defaults**. A failure by Lessee to perform any term or provision of this Lease to be performed by it, or a delay in such performance, shall constitute an "**Event of Default**" under this Lease. Lessee must immediately commence to cure, correct or remedy such failure or delay and must complete such cure, correction or remedy as soon as reasonably possible thereafter. During any applicable "Cure Period" (as defined below), Lessee shall not be deemed to be in default under this Lease so long as it is diligently proceeding to cure, correct or remedy the failure or delay. Without limiting the generality of the foregoing, the following events shall also constitute Events of Default hereunder and, subject to the rights of Mortgagees under Article 12, there shall be no Cure Period applicable thereto:

32.1.1 Reserved;

32.1.2 The occurrence of a Bankruptcy/Dissolution Event with respect to Lessee;

32.1.3 Lessee's abandonment, vacation, or discontinuance of use of the Premises, or any substantial portion thereof, for a period of one hundred eighty (180) days, unless due to Force Majeure or renovations or repairs required or permitted to be made under this Lease; or

32.1.4 Reserved.

32.2 **Notice of Default**. Except for Events of Default as to which there is no Cure Period for Lessee hereunder, the Authority shall give written notice of default to Lessee specifying the default complained of ("**Notice of Default**"). Failure or delay in giving such notice shall not constitute a waiver of any default nor shall it change the time of default. Except as otherwise expressly provided in this Lease, any failure or delay by the Authority in asserting any of its rights or remedies as to any default shall not operate as a waiver of any default or of any such rights or remedies or deprive Authority of its right to institute and maintain any actions

or proceedings which it may deem necessary to protect, assert or enforce any such rights or remedies. Any Notice of Default required to be given by Authority shall be in addition to, and not in lieu of, any notice required under Section 1161 of the California Code of Civil Procedure.

32.3 **Time to Cure**. Upon the receipt of a Notice of Default, Lessee shall have ten (10) business days to cure such failure if it is a failure to pay a sum of money, and thirty (30) days to cure such failure if it is a failure to perform any other provision hereof (such 10-business day or 30-day period being referred to herein as the "**Cure Period**"); provided, however, that if a longer period is expressly provided for under this Lease for the cure of a default, then the Cure Period shall refer to such longer period. Notwithstanding the foregoing, if a non-monetary default is not reasonably susceptible of cure within the aforesaid thirty (30) day period then, provided that Lessee shall commence to cure such default upon receipt of the Notice of Default and shall continue at all times to diligently pursue such cure to completion, the Cure Period shall be extended by the amount of time reasonably necessary to cure such default.

32.4 **Limitation on Events of Default**. Lessee shall not be considered in default as to any provision of this Lease when such default is the result of or pursuant to, any process, order, or decree of any court or regulatory body of competent jurisdiction, or any other circumstances which are physically impossible to cure provided Lessee uses due diligence in pursuing whatever is required to obtain release from or reversal of such process, order, or decree or is attempting to remedy such other circumstances preventing its performance.

32.5 **Remedies**. Upon the occurrence of an Event of Default by Lessee, and subject to the rights of any Mortgagee to cure such Event of Default as provided in Article 12 hereof, Authority shall have, in addition to any other remedies in law or equity, the following remedies which are cumulative:

32.5.1 Reserved.

32.5.2 Keep Lease in Effect. Without terminating this Lease, so long as Authority does not deprive Lessee of legal possession of the Premises and allows Lessee to assign or sublet subject only to Authority's rights set forth herein, Authority may continue this Lease in effect and bring suit from time to time for rent and other sums due, and for Lessee's breach of other covenants and agreements herein. No act by or on behalf of Authority under this provision shall constitute a termination of this Lease. It is the intention of the parties to incorporate the provisions of California Civil Code Section 1951.4 by means of this provision.

32.5.3 Reserved.

32.6 **Reserved**.

32.7 **Authority's Right to Cure Lessee's Default**. Authority at any time after Lessee's failure to perform any covenant, condition or agreement contained herein beyond any applicable notice and cure period, may cure such failure at Lessee's cost and expense. If, after delivering to Lessee two (2) or more notices within a ten (10) year period with respect to any such default, Authority at any time during such ten (10) year period, by reason of Lessee's

continuing failure, pays or expends any sum, Lessee shall immediately pay to Authority the lesser of the following amounts: (1) twice the amount expended by Authority to cure such default and (2) the amount expended by Authority to cure such default, plus One Thousand Dollars ($1,000.00), adjusted by the percentage increase in the CPI since the Commencement Date. Authority shall give any Mortgagees the reasonable opportunity to cure Lessee's default as provided in Section 12.5 above prior to Authority's expenditure of any amounts thereon.

32.8 **Default by Authority**. Notwithstanding anything to the contrary in this Lease, Authority's liability to Lessee for damages arising out of or in connection with Authority's breach of any provision or provisions of this Lease shall not exceed the value of Authority's equity interest in the Premises and its right to insurance proceeds in connection with the policies required under Article 9 hereof.

33. HAZARDOUS MATERIALS.

33.1 Notice to Authority.

Lessee shall immediately notify Authority in writing during the Term of: (a) the discovery of any concentration or amount of Hazardous Materials on or under the Premises requiring notice to be given to any governmental entity or Authority under all Hazardous Materials Laws; (b) any knowledge by Lessee (after verification of the veracity of such knowledge to Lessee's reasonable satisfaction) that the Premises do not comply with any Hazardous Materials Laws; (c) the receipt by Lessee of written notice of any Hazardous Materials claims; and (d) the discovery by Lessee of any occurrence or condition on the Premises or on any real property located within 2,000 feet of the Premises that could cause the Premises or any part thereof to be designated as a "hazardous waste property" or as a "border zone property" under California Health and Safety Code Sections 25220, et seq., or regulations adopted therewith.

33.2 Use and Operation of Premises.

Lessee shall not use the Premises or allow the Premises to be used for the generation, manufacture, storage, disposal, or Release of Hazardous Materials in violation of Hazardous Materials Laws. Lessee shall use commercially reasonable efforts to ensure that no agent, employee, or contractor of Lessee, nor any authorized user of the Premises, uses the Premises or allows the Premises to be used for the generation, manufacture, storage, disposal or Release of Hazardous Materials in violation of Hazardous Materials Laws. Lessee's agreements and contracts with such third parties shall include covenants for compliance by such third parties with the aforementioned environmental covenants. Lessee shall comply and cause the Premises to comply with Hazardous Materials Laws. The storage and use, in customary amounts, of normal cleaning supplies and other items that are generally used in connection with the construction of improvements similar to the Project shall be permitted so long as such materials are used and stored in accordance with Hazardous Materials Laws.

33.3 Remedial Actions.

If Lessee has actual knowledge of the presence of any Hazardous Materials on or under the Premises that are in violation of Hazardous Materials Laws, Lessee shall immediately take or cause its Sublessee to immediately take, at no cost or expense to Authority, all handling, treatment, removal, storage, decontamination, cleanup, transport, disposal or other remedial action, if any, required by any Hazardous Materials Laws or by any orders or regulations of any governmental entity or agency or any judgment, consent decree, settlement or compromise with respect to any Hazardous Materials claims. The foregoing, however, shall be subject to Lessee's right of contest below.

33.4 **Right of Contest**.

Lessee may contest in good faith any claim, demand, levy or assessment under Hazardous Materials Laws if: (a) the contest is based on a material question of law or fact raised by Lessee in good faith, (b) Lessee promptly commences and thereafter diligently pursues the contest, (c) the contest will not materially impair the taking of any remedial action with respect to such claim, demand, levy or assessment, and (d) if requested by Authority or lender, Lessee deposits with Authority or lender any funds or other forms of assurance Authority in good faith from time to time determines appropriate to protect Authority from the consequences of the contest being unsuccessful and any remedial action then reasonably necessary. No Event of Default shall be deemed to exist with respect to any claim, demand, levy or attachment being contested by Lessee under the conditions of this Section.

33.5 **Environmental Indemnity**.

Lessee shall defend, indemnify, and hold Authority Indemnified Parties free and harmless against any claims, demands, administrative actions, litigation, liabilities, losses, damages, response costs, and penalties, including all costs of legal proceedings and attorney's fees, that Authority Indemnified Parties may directly or indirectly sustain or suffer as a consequence of any inaccuracy or breach of any Lessee representation, warranty, agreement, or covenant contained in this Lease with respect to Hazardous Materials, or as a consequence of any use, generation, manufacture, storage, Release, or disposal (whether or not Lessee knew of same) of any Hazardous Materials occurring during Lessee's use or occupancy of the Premises, provided that the terms of the foregoing indemnity shall not apply to conditions on the Premises that existed prior to the date of this Lease, nor shall the terms of the foregoing indemnity apply to (a) matters caused by the Authority Indemnified Parties or (b) conditions on the Premises arising after Lessee's surrender of the Premises other than any conditions that are caused by Lessee, its members, officers, contractors, agents, or any other party for which Lessee may be liable, whether by such party's action or inaction. The provisions of this Section 14.5 shall not bind or be applicable to any lender or to any purchaser at any judicial or non-judicial foreclosure sale or deed-in-lieu thereof or to the first successor or assign thereof.

34. **MISCELLANEOUS.**

34.1 **Quiet Enjoyment**. Upon the paying of all rent hereunder and performing each of the other covenants, agreements and conditions of this Lease required to be performed by Lessee, Lessee shall lawfully and quietly hold, occupy and enjoy the Premises during the Term without

hindrance or molestation of anyone lawfully claiming by, through or under the Authority, subject, however, to the provisions of this Lease.

34.2 **Time is of the Essence**. Except as specifically otherwise provided for in this Lease, time is of the essence of this Lease and applies to all times, restrictions, conditions, and limitations contained herein.

34.3 **Reserved**.

34.4 **Authority Disclosure and Lessee's Waiver**.

34.4.1 Disclosures and Waiver.

(1) Lessee acknowledges that it may incur additional engineering and construction costs above and beyond those contemplated by either party to this Lease at the time of the execution hereof and Lessee agrees that, it will make no demands upon Authority for any construction, alterations, or any kind of labor that may be necessitated in connection therewith.

(2) Lessee hereby waives, withdraws, releases, and relinquishes any and all claims, suits, causes of action (other than a right to terminate as otherwise provided in this Lease), rights of rescission, or charges against Authority, its officers, agents, employees or volunteers which Lessee now has or may have or assert in the future which are based upon any defects in the physical condition of the Premises and the soil thereon and thereunder or the environmental condition of the Premises, regardless of whether or not said conditions were known at the time of the execution of this instrument.

(3) California Civil Code Section 1542 provides as follows:

> A GENERAL RELEASE DOES NOT EXTEND TO CLAIMS WHICH THE CREDITOR DOES NOT KNOW OR SUSPECT TO EXIST IN HIS OR HER FAVOR AT THE TIME OF EXECUTING THE RELEASE, WHICH IF KNOWN BY HIM OR HER MUST HAVE MATERIALLY AFFECTED HIS OR HER SETTLEMENT WITH THE DEBTOR.

By initialing this paragraph, Lessee acknowledges that it has read, is familiar with, and waives the provisions of California Civil Code §1542 set forth above, and agrees to all of the provisions of Subsection 15.4.1 above.

_____
Lessee's Initials

34.4.2 Right of Offset. Lessee acknowledges that the rent provided for in this Lease has been agreed upon in light of Lessee's construction, maintenance and repair obligations set forth herein, and, notwithstanding anything to the contrary provided in this Lease or by applicable Law, Lessee hereby waives any and all rights, if any, to make repairs at the expense of Authority and to deduct or offset the cost thereof from the First Sale Profit Payment Rent or any other sums due Authority hereunder.

34.5 **Holding Over**. If Lessee holds over after the expiration of the Term for any cause, with or without the express or implied consent of Authority, such holding over shall be deemed to be a tenancy from month-to-month only, and shall not constitute a renewal or extension of the Term. During any such holdover period, Lessee shall pay a base ground rent equal to two hundred percent (200%) of the prevailing fair market rental rate for thirty-five (35) year ground leases of land in the Los Angeles area (excluding the value of the Improvements) as reasonably determined by Authority. Such holdover shall otherwise be subject to the same terms, conditions, restrictions and provisions as herein contained. Such holding over shall include any time employed by Lessee to remove machines, appliances and other equipment during the time periods herein provided for such removal. Nothing contained herein shall be construed as consent by Authority to any holding over by Lessee, and Authority expressly reserves the right to require Lessee to surrender possession of the Premises to Authority as provided in this Lease upon the expiration or other termination of this Lease. The provisions of this Section 15.5 shall not be deemed to limit or constitute a waiver of any other rights or remedies of Authority provided at law or in equity. If Lessee fails to surrender the Premises upon the termination or expiration of this Lease, in addition to any other liabilities to Authority accruing therefrom, Lessee shall protect, defend, indemnify and hold Authority harmless from all losses, costs (including reasonable attorneys' fees), damages, claims and liabilities resulting from such failure, including, without limitation, any claims made by any succeeding tenant arising from such failure to surrender, and any lost profits to Authority resulting therefrom.

34.6 **Waiver of Conditions or Covenants**. Except as stated in writing by the waiving party, any waiver by either party of any breach of any one or more of the covenants, conditions, terms, and agreements of this Lease shall not be construed to be a waiver of any subsequent or other breach of the same or of any other covenant, condition, term, or agreement of this Lease, nor shall failure on the part of either party to require exact full and complete compliance with any of the covenants, conditions, terms, or agreements of this Lease be construed as in any manner changing the terms hereof or estopping that party from enforcing the full provisions hereof, nor shall the terms of this Lease be changed or altered in any manner whatsoever other than by written agreement of Authority and Lessee. No delay, failure, or omission of Authority to re-enter the Premises or of either party to exercise any right, power, privilege, or option, arising from any default, nor any subsequent acceptance of rent then or thereafter accrued shall impair any such right, power, privilege, or option or be construed as a waiver of or acquiescence in such default or as a relinquishment of any right. No notice to Lessee shall be required to restore or revive "time of the essence" after the waiver by Authority of any default. Except as specifically provided in this Lease, no option, right, power, remedy, or privilege of either party shall be construed as being exhausted by the exercise thereof in one or more instances.

34.7 **Remedies Cumulative**. The rights, powers, options, and remedies given Authority under this Lease shall be cumulative except as otherwise specifically provided for in this Lease.

34.8 **Authorized Right of Entry**. In any and all cases in which provision is made herein for termination of this Lease, or for exercise by Authority of right of entry or re-entry upon the Premises, or in case of abandonment or vacation of the Premises by Lessee, Lessee hereby irrevocably authorizes Authority to enter upon the Premises and remove any and all

persons and property whatsoever situated upon the Premises and place all or any portion of said property, except such property as may be forfeited to Authority, in storage for the account of and at the expense of Lessee.

Lessee agrees to indemnify, defend and save harmless Authority from any cost, expense, loss or damage arising out of or caused by any such entry or re-entry upon the Premises under this Section 15.8, and the removal of persons and property and storage of such property by Authority and its agents, except to the extent caused by the gross negligence or willful misconduct of Authority, its agents or employees.

34.9 **Place of Payment and Filing**. All Lease Consideration shall be paid to and all statements and reports herein required and other items deliverable to Authority hereunder shall be filed with or delivered to the Authority. Checks, drafts, letters of credit and money orders shall be made payable to the Los Angeles Grand Avenue Authority.

34.10 **Service of Written Notice or Process**. Any notice required to be sent under this Lease shall be in compliance with and subject to this Section 15.10. If Lessee is not a resident of the State of California, or is an association or partnership without a member or partner resident of said State, or is a foreign corporation, Lessee shall file with Director a designation of a natural person residing in the County of Los Angeles, State of California, or a service company, such as CT Corporation, which is authorized to accept service, giving his or its name, residence, and business address, as the agent of Lessee for the service of process in any court action between Lessee and Authority, arising out of or based upon this Lease, and the delivery to such agent of written notice or a copy of any process in such action shall constitute a valid service upon Lessee.

If for any reason service of such process upon such agent is not possible, then any officer of Lessee may be personally served with such process outside of the State of California and such service shall constitute valid service upon Lessee; and it is further expressly agreed that Lessee is amenable to such process and submits to the jurisdiction of the court so acquired and waives any and all objection and protest thereto.

Written notice addressed to Lessee at the addresses below-described, or to such other address that Lessee may in writing file with Director, shall be deemed sufficient if said notice is delivered personally, by telecopy or facsimile transmission or, provided in all cases there is a return receipt requested and postage or other delivery charges prepaid, by registered or certified mail posted in the County of Los Angeles, California, Federal Express or DHL, or such other services as Lessee and Authority may mutually agree upon from time to time. Each notice shall be deemed received and the time period for which a response to any such notice must be given or any action taken with respect thereto (including cure of any prospective Event of Default) shall commence to run from the date of actual receipt of the notice by the addressee thereof in the case of personal delivery, telecopy or facsimile transmission if before 5:00 p.m. on regular business days, or upon the expiration of the third (3rd) business day after such notice is sent from within Los Angeles County in the case of such registered or certified mail as authorized in this Section.

Copies of any written notice to Lessee shall also be simultaneously mailed to any Mortgagee of which Authority has been given written notice and an address for service. Notice given to Lessee as provided for herein shall be effective as to Lessee notwithstanding the failure to send a copy to such Mortgagee.

As of the date of execution hereof, the persons authorized to receive notice on behalf of Authority and Lessee are as follows:

AUTHORITY: The Los Angeles Grand Avenue Authority
c/o Helen S. Parker
Principal Deputy County Counsel
County of Los Angeles
Office of the County Counsel
Public Works Division
651 Kenneth Hahn Hall of Administration
Los Angeles, California 90012

With a Copy to:

Timothy J. Chung
Deputy City Attorney
Los Angeles City Attorney's Office
1200 West 7th Street, Suite 500
Los Angeles, CA 90017

and to

The Community Redevelopment Agency of the City of Los Angeles, California
354 South Spring Street
Los Angeles, California 90013
Attention: Regional Administrator

and to

County of Los Angeles
500 W. Temple Street, Room 713
Los Angeles, California 90012
Attention: Chief Administrative Officer

LESSEE: Grand Avenue M Urban Housing, LLC
c/o The Related Companies of California, LLC
18201 Von Karman Avenue, Suite 900
Irvine, California 92612
Attention: William A. Witte

With a Copy to:

Bocarsly Emden Cowan Esmail & Arndt LLP
633 W. 5th Street, 70th Floor
Los Angeles, California 90071
Attention: Lance Bocarsly

34.11 **Interest**. In any situation where Authority has advanced sums on behalf of Lessee pursuant to this Lease, such sums shall be due and payable immediately upon demand, together with interest at the Applicable Rate (unless another rate is specifically provided herein) from the date such sums were first advanced, until the time payment is received. If Lessee repays sums advanced by Authority on Lessee's behalf with interest in excess of the maximum rate permitted by applicable Laws, Authority shall refund such excess payment.

34.12 **Captions**. The captions contained in this Lease are for informational purposes only, and are not to be used to interpret or explain the particular provisions of this Lease.

34.13 **Attorneys' Fees**. In the event of any action, proceeding or arbitration arising out of or in connection with this Lease, whether or not pursued to judgment, the prevailing party shall be entitled, in addition to all other relief, to recover its costs and reasonable attorneys' fees, including all fees, costs and expenses incurred in executing, perfecting, enforcing and collecting any judgment.

34.14 **Amendments**. Lessee and Authority mutually agree to consider reasonable requests for amendments to this Lease that may be made by any of the parties hereto, lending institutions, or bond counsel or financial consultants to Authority, provided such requests are consistent with this Lease and would not substantially alter the basic business terms included herein. Any amendments hereto shall be subject to the prior approval of the Governing Entities.

34.15 **Time For Director Approvals**. Except where a different time period is specifically provided for in this Lease, whenever in this Lease the approval of Director is required, approval shall be deemed not given unless within thirty (30) days after the date of the receipt of the written request for approval from Lessee, Director either (a) approves such request in writing, or (b) notifies Lessee that it is not reasonably possible to complete such review within the thirty (30) day period, provides a final date for approval or disapproval by Director (the "**Extended Time**") and approves such request in writing prior to such Extended Time. If Director does not approve such request in writing within such Extended Time, the request shall be deemed to be disapproved.

34.16 **Time For Authority Action**. Notwithstanding anything to the contrary contained in this Lease, wherever Director determines that an Authority action required hereunder necessitates approval from or a vote of Authority's Board or any of the boards or commissions of any or all of the Governing Entities, the time period for Authority performance of such action shall be extended as is necessary in order to secure such approvals or votes, and Authority shall not be deemed to be in default hereunder in the event that it fails to perform such action within the time periods otherwise set forth herein.

34.17 **Estoppel Certificates**. Each party agrees to execute, within ten (10) business days after the receipt of a written request therefor from the other party, a certificate stating: that this Lease is in full force and effect and is unmodified (or stating otherwise, if true); and that, to the best knowledge of such party, the other party is not then in default under the terms of this Lease (or stating the grounds for default if such be the case). Prospective purchasers and lenders and Anchor Tenants may rely on such statements, but such statements shall not serve as a bar to the right to conduct audits as permitted hereunder or collect amounts owed hereunder.

34.18 **Indemnity Obligations**. Whenever in this Lease there is an obligation to indemnify, hold harmless and/or defend, irrespective of whether or not the obligation so specifies, it shall include the obligation to defend and pay reasonable attorneys' fees, reasonable expert fees and court costs.

34.19 **Lessee Representations, Warranties and Covenants**.

34.19.1 Organization. Lessee is a limited liability company, duly formed, validly existing under the laws of the State of California and qualified to conduct business in the State of California, with full power and authority to conduct its business as presently conducted and to execute, deliver and perform its obligations under this Lease and the other Market Rate Premises Documents.

34.19.2 Authorization. Lessee has taken all necessary actions to authorize its execution, delivery and, subject to the conditions set forth herein, performance of its obligations under the Market Rate Premises Documents. Upon such execution and deliver, this Lease and the other Market Rate Premises Documents shall constitute the legal, valid and binding obligations of Lessee, enforceable against it in accordance with their terms.

34.19.3 No Conflict. The execution, delivery and performance of this Lease and the other Market Rate Premises Documents does not and will not conflict with, or constitute a violation or breach of, or a default under, (a) the operating agreement and/or other formation documents of Lessee, (b) any applicable law, rule or regulation binding upon or applicable to Lessee, or (c) any material agreement to which Lessee is a party.

34.19.4 No Litigation. There is no existing, or to Lessee's knowledge, pending or threatened litigation, suit, action or proceeding before any court or administrative agency affecting Lessee that would, if adversely determined, adversely affect Lessee, the Premises or Lessee's ability to perform its obligations hereunder or under the other Market Rate Premises Documents.

34.19.5 No Defaults. Lessee is not in default in respect of any of its obligations or liabilities pertaining to the Premises, nor is there any state of facts, circumstances, conditions, or events which, after notice, lapse of time, or both would constitute or result in any such default. Lessee is not and will not be in default with respect to any agreements, obligations or liabilities that could adversely affect Lessee's ability to perform its obligations hereunder.

34.19.6 Financial Statements. Lessee has previously delivered to Authority or made available for inspection by Authority and its representatives true and accurate financial statements with respect to Lessee, which financial statements were prepared in accordance with generally accepted accounting principles and fairly and accurately represent the financial condition of Lessee as of the date or dates thereof. No material adverse change has occurred in the financial condition of Lessee between the date or dates of such financial statements and the date hereof. At the request of Authority from time to time Lessee shall make available for inspection by Authority such additional financial statements and information concerning the financial condition of Lessee as Authority shall reasonably request.

35. **ARBITRATION.**

Except as otherwise provided by this Article 16, disputed matters which may be arbitrated pursuant to this Lease shall be settled by binding arbitration in accordance with the then existing provisions of the California Arbitration Act, which as of the date hereof is contained in Title 9 of Part III of the California Code of Civil Procedure, commencing with Section 1280.

(c) Either party (the "**Initiating Party**") may initiate the arbitration process by sending written notice ("**Request for Arbitration**") to the other party (the "**Responding Party**") requesting initiation of the arbitration process and setting forth a brief description of the dispute or disputes to be resolved and the contention(s) of the Initiating Party. Within ten (10) days after service of the Request for Arbitration, the Responding Party shall file a "Response" setting forth the Responding Party's description of the dispute and the contention(s) of Responding Party. If Responding Party has any "Additional Disputes" he shall follow the format described for the Initiating Party. The Initiating Party will respond within ten (10) days after service of the Additional Disputes setting forth Initiating Party's description of the Additional Disputes and contentions regarding the Additional Disputes.

(d) Notwithstanding anything to the contrary which may now or hereafter be contained in the California Arbitration Act, the parties agree that the following provisions shall apply to any and all arbitration proceedings conducted pursuant to this Lease:

35.1 **Selection of Arbitrator**. The parties shall attempt to agree upon an arbitrator who shall decide the matter. If, for any reason, the parties are unable to agree upon the arbitrator within ten (10) days of the date the Initiating Party serves a request for arbitration on the Responding Party, then at any time on or after such date either party may petition for the appointment of the arbitrator as provided in California Code of Civil Procedure Section 1281.6.

35.2 **Arbitrator**. The arbitrator shall be a retired judge of the California Superior Court, Court of Appeal or Supreme Court, or any United States District Court or Court of Appeals located within the State, who has agreed to resolve civil disputes.

35.3 **Scope of Arbitration**. Authority and Lessee affirm that the mutual objective of such arbitration is to resolve the dispute as expeditiously as possible. The arbitration process shall not apply or be used to determine issues other than (i) those presented to the arbitrator by

the Initiating Party provided those disputes are arbitrable disputes pursuant to this Lease, (ii) Additional Disputes presented to the arbitrator by the Responding Party, provided that any such Additional Disputes constitute arbitrable disputes pursuant to this Lease and (iii) such related preliminary or procedural issues as are necessary to resolve (i) and/or (ii) above. The arbitrator shall render an award. Either party may, at its sole cost and expense, request a statement of decision explaining the arbitrator's reasoning which shall be in such detail as the arbitrator may determine. Unless otherwise expressly agreed by the parties in writing, the award shall be made by the arbitrator no later than the sooner of six (6) months after the date on which the arbitrator is selected by mutual agreement or court order, whichever is applicable, or five (5) months after the date of a denial of a petition to disqualify a potential arbitrator for cause. Authority and Lessee hereby instruct the arbitrator to take any and all actions deemed reasonably necessary, appropriate or prudent to ensure the issuance of an award within such period. Notwithstanding the foregoing, failure to complete the arbitration process within such period shall not render such arbitration or any determination made therein void or voidable.

35.4 **Immunity**. The parties hereto agree that the arbitrator shall have the immunity of a judicial officer from civil liability when acting in the capacity of arbitrator pursuant to this Lease.

35.5 **Section 1282.2**. The provisions of Code of Civil Procedure § 1282.2 shall apply to the arbitration proceedings except to the extent they are inconsistent with the following:

35.5.1 Unless the parties otherwise agree, the arbitrator shall appoint a time and place for the hearing and shall cause notice thereof to be served as provided in said § 1282.2 not less than ninety (90) days before the hearing, regardless of the aggregate amount in controversy.

35.5.2 No later than sixty (60) days prior to the date set for the hearing (unless, upon a showing of good cause by either party, the arbitrator establishes a different period), in lieu of the exchange and inspection authorized by Code of Civil Procedure § 1282.2(a)(2)(A), (B) and (C), the parties shall simultaneously exchange the following documents by personal delivery to each other and to the arbitrator:

(1) A written Statement of Position, as further defined below, setting forth in detail that party's final position regarding the matter in dispute and specific numerical proposal for resolution of monetary disputes;

(2) A list of witnesses each party intends to call at the hearing, designating which witnesses will be called as expert witnesses and a summary of each witness's testimony;

(3) A list of the documents each intends to introduce at the hearing, together with complete and correct copies of all of such documents; and,

(4) If the issue involves a valuation matter, a list of all Written Appraisal Evidence (as defined below) each intends to introduce at the hearing, together with complete and correct copies of all of such Written Appraisal Evidence.

(5) No later than twenty (20) days prior to the date set for the hearing, each party may file a reply to the other party's Statement of Position ("**Reply**"). The Reply shall contain the following information:

(i) A written statement, to be limited to that party's rebuttal to the matters set forth in the other party's Statement of Position;

(ii) A list of witnesses each party intends to call at the hearing to rebut the evidence to be presented by the other party, designating which witnesses will be called as expert witnesses;

(iii) A list of the documents each intends to introduce at the hearing to rebut the evidence to be presented by the other party, together with complete and correct copies of all of such documents (unless, upon a showing of good cause by either party, the arbitrator establishes a different deadline for delivering true and correct copies of such documents);

(iv) If the issue involves a valuation matter, a list of all Written Appraisal Evidence, or written critiques of the other party's Written Appraisal Evidence if any, each intends to introduce at the hearing to rebut the evidence presented by the other party, together with complete and correct copies of all of such Written Appraisal Evidence (unless, upon a showing of good cause by either party, the arbitrator establishes a different deadline for delivering true and correct copies of such Written Appraisal Evidence); and

(v) Witnesses or documents to be used solely for impeachment of a witness need not be identified or produced.

(6) The arbitrator is not bound by the rules of evidence, but may not consider any evidence not presented at the hearing. The arbitrator may exclude evidence for any reason a court may exclude evidence or as provided in this Lease.

35.6 **Statements of Position**. The Statement of Position to be delivered by Section 16.5 shall comply with the following requirements:

35.6.1 Where the dispute involves rent to be charged, market values, insurance levels or other monetary amounts, the Statements of Position shall numerically set forth the existing market value, insurance level and/or other monetary amounts in dispute, the party's proposed new market value, insurance level and/or other monetary amounts, and shall additionally set forth the facts supporting such party's position.

35.6.2 If the dispute relates to the cost of Alterations, the Statements of Position shall set forth the facts supporting such party's position and the amount of each cost which the party believes should be allowed or disallowed.

35.7 **Written Appraisal Evidence**. Neither party may, at any time during the proceedings, introduce any written report which expresses an opinion regarding the fair market value of the Premises, or any portion thereof, ("**Written Appraisal Evidence**") unless such Written Appraisal Evidence substantially complies with the following standards: it shall have

been submitted in accordance with the requirements of Subsection 5(iv) above; it shall describe the Premises; identify the uses permitted thereon; describe or take into consideration the terms, conditions and restrictions of this Lease; correlate the appraisal method(s) applied; discuss the relevant factors and data considered; review rentals paid by lessees within Southern California who are authorized to conduct similar activities on comparable leaseholds; and, describe the technique of analysis, limiting conditions and computations that were used in the formulation of the valuation opinion expressed. Written Appraisal Evidence in connection with disputes arising out of Article 6 of this Lease shall predicate any valuation conclusions contained therein on the Income Approach. Written Appraisal Evidence shall in all other respects be in material conformity and subject to the requirements of the Code of Professional Ethics and the Standards of Professional Practice of The Appraisal Institute or any successor entity.

35.8 **Evidence**. The provisions of Code of Civil Procedure § 1282.2(a)(2)(E) shall not apply to the arbitration proceeding. The arbitrator shall have discretion to preclude a party from introducing witnesses, documents or Written Appraisal Evidence (other than impeachment testimony) unless such information was previously delivered to the other party in accordance with Section 16.5 and, in the case of Written Appraisal Evidence, substantially complies with the requirements of Section 16.7, or such evidence consists of a transcript of a deposition of an expert witness conducted pursuant to Section 16.9. Notwithstanding the foregoing, the arbitrator may allow a party to introduce evidence which, in the exercise of reasonable diligence, could not have been delivered to the other party in accordance with Section 16.5, provided such evidence is otherwise permissible hereunder.

35.9 **Discovery**. The provisions of Code of Civil Procedure § 1283.05 shall not apply to the arbitration proceedings except to the extent incorporated by other sections of the California Arbitration Act which apply to the arbitration proceedings. There shall be no pre-arbitration discovery except as provided in Section 16.5; provided, however, each party shall have the right, no later than seven (7) days prior to the date first set for the hearing, to conduct a deposition, not to exceed three (3) hours in duration unless the arbitrator otherwise determines that good cause exists to justify a longer period, of any person identified by the other party as an expert witness.

35.10 **Awards of Arbitrators**.

35.10.1 Monetary Issues. With respect to monetary disputes (including without limitation disputes regarding First Sale Profit Payment Rent and the amount of coverage under the policies of insurance required pursuant to Article 9 of this Lease), the arbitrator shall have no right to propose a middle ground or any proposed modification of either Statement of Position. The arbitrator shall instead select whichever of the two Statements of Position is the closest to the monetary or numerical amount that the arbitrator determines to be the appropriate determination of the rent, expense, claim, cost, delay, coverage or other matter in dispute and shall render an award consistent with such Statement of Position. For purposes of this Section 16.10, each dispute regarding First Sale Profit Payment Rent and the amount of required insurance coverage shall be considered separate disputes (a "**Separate Dispute**"). While the arbitrator shall have no right to propose a middle ground or any proposed modification of either Statement of Position concerning a Separate Dispute, the arbitrator shall have the right, if the arbitrator so chooses, to choose one party's Statement of Position on one or more of the Separate

Disputes, while selecting the other party's Statement of Position on the remaining Separate Disputes. For example, if the parties are unable to agree on the First Sale Profit Payment Rent and the amount of liability insurance coverage, then there shall be two (2) Separate Disputes and the arbitrator shall be permitted to select the Authority's Statement of Position with respect to none, some or all of such two Separate Disputes and select the Lessee's Statement of Position, on the balance, if any, of such two Separate Disputes. Upon the arbitrator's selection of a Statement of Position, pursuant to this Article 16, the Statement of Position so chosen and the award rendered by the arbitrator thereon shall be final and binding upon the parties, absent Gross Error (as defined in Section 16.14.3 below) on the part of the arbitrator.

35.10.2 Nonmonetary Issues. With respect to nonmonetary issues and disputes, the arbitrator shall determine the most appropriate resolution of the issue or dispute, taking into account the Statements of Position submitted by the parties, and shall render an award accordingly. Such award shall be final and binding upon the parties, absent Gross Error on the part of the arbitrator.

35.11 **Powers of Arbitrator**. In rendering the award, the arbitrator shall have the power to consult or examine experts or authorities not disclosed by a party pursuant to Section 16.5.2(2) hereof, provided that each party is afforded the right to cross-examine such expert or rebut such authority.

35.12 **Costs of Arbitration**. Lessee and Authority shall equally share the expenses and fees of the arbitrator, together with other expenses of arbitration incurred or approved by the arbitrator. Failure of either party to pay its share of expenses and fees constitutes a material breach of such party's obligations hereunder.

35.13 **Amendment to Implement Judgment**. Within seven (7) days after the issuance of any award by the arbitrator becomes final, the Authority will draft a proposed amendment to this Lease setting forth the relevant terms of such award. As long as the amendment accurately sets forth the relevant terms of the award and does not otherwise modify this Lease, Lessee will sign the amendment and return the executed copy to the Authority within seven (7) days after delivery of a copy of the amendment to Lessee. Authority shall thereafter execute the amendment as soon as reasonably practicable.

35.14 **Impact of Gross Error Allegations**. Where either party has charged the arbitrator with Gross Error:

35.14.1The award shall not be implemented if the party alleging Gross Error obtains a judgment of a court of competent jurisdiction stating that the arbitrator was guilty of Gross Error and vacating the arbitration award ("**Disqualification Judgment**"). In the event of a Disqualification Judgment, the arbitration process shall begin over immediately in accordance with this Section 16.14, which arbitration shall be conducted (with a different arbitrator) as expeditiously as reasonably possible.

35.14.2The party alleging Gross Error shall have the burden of proof.

35.14.3For the purposes of this Article 16, the term "**Gross Error**" shall mean that the arbitration award is subject to vacation pursuant to California Code of Civil Procedure § 1286.2 or any successor provision.

35.15 **Notice**.

NOTICE: BY INITIALING IN THE SPACE BELOW YOU ARE AGREEING TO HAVE ANY DISPUTE ARISING OUT OF THE MATTERS INCLUDED IN THE "ARBITRATION OF DISPUTES" PROVISION DECIDED BY NEUTRAL ARBITRATION AS PROVIDED BY CALIFORNIA LAW AND YOU ARE GIVING UP ANY RIGHTS YOU MIGHT POSSESS TO HAVE THE DISPUTE LITIGATED IN A COURT OR JURY TRIAL. BY INITIALING IN THE SPACE BELOW YOU ARE GIVING UP YOUR JUDICIAL RIGHTS TO DISCOVERY AND APPEAL, UNLESS THOSE RIGHTS ARE SPECIFICALLY INCLUDED IN THE "ARBITRATION OF DISPUTES" PROVISION. IF YOU REFUSE TO SUBMIT TO ARBITRATION AFTER AGREEING TO THIS PROVISION, YOU MAY BE COMPELLED TO ARBITRATE UNDER THE AUTHORITY OF THE CALIFORNIA CODE OF CIVIL PROCEDURE. YOUR AGREEMENT TO THIS ARBITRATION PROVISION IS VOLUNTARY.

WE HAVE READ AND UNDERSTAND THE FOREGOING AND AGREE TO SUBMIT DISPUTES ARISING OUT OF THE MATTERS INCLUDED IN THE ARBITRATION OF DISPUTES PROVISION TO NEUTRAL ARBITRATION.

_____	_____
Initials of Lessee	Initials of Authority

36. **COMPLIANCE WITH APPLICABLE LAWS AND AUTHORITY POLICIES.**

36.1 **Local, State and Federal Laws**.

Lessee shall construct the Improvements and perform all Alterations in conformity with all Laws, including, without limitation, all applicable federal and state labor standards.

36.2 **Non-Discrimination During Construction; Equal Opportunity**.

Lessee, for itself and its successors, assigns and transferees agrees that in the construction of any Alterations provided for in this Lease:

36.2.1 It will not discriminate against any employee or applicant for employment because of race, color, religion, creed, national origin, ancestry, disability, medical condition, age, marital status, domestic partner status, sex, sexual preference/orientation, Acquired Immune Deficiency Syndrome (AIDS) acquired or perceived, or retaliation for having filed a discrimination complaint (nondiscrimination factors). Lessee will take affirmative action to ensure that applicants are employed, and that employees are treated without regard to the nondiscrimination factors during employment including, but not limited to, activities of: upgrading, demotion, or transfer; recruitment or recruitment advertising, layoff or termination; rates of pay or other forms of compensation; and selection for training, including apprenticeship.

Lessee agrees to post in conspicuous places, available to employees and applicants for employment, the applicable nondiscrimination clause set forth herein:

36.2.2 It will, ensure that its solicitations or advertisements for employment are in compliance with the aforementioned nondiscrimination factors; and

36.2.3 It will cause the foregoing provisions to be inserted in all contracts for construction of Alterations; provided, however, that the foregoing provisions shall not apply to contracts or subcontracts for standard commercial supplies or raw materials.

36.3 **Affirmative Action in Employment and Contracting Procedures, Including Utilization of Minority, Women, and Other Businesses**.

Lessee and Authority acknowledge and agree that it is the policy of Authority to promote and ensure economic advancement of minorities and women as well as other economically disadvantaged persons through employment and in the award of contracts and subcontracts for construction in redevelopment project areas. Lessee shall use commercially reasonable efforts to employ or select employees, contractors and subcontractors possessing the necessary skill, expertise, cost level and efficiency for the development of the Improvements and any Alterations.

36.3.1 Utilization of Minority-Owned, Women-Owned, and Other Businesses (M/W/OBE).

(1) Lessee shall use its best efforts to the greatest extent feasible to seek out and award and require the award of contracts and subcontracts for development of the Project to contracting firms which are located or owned in substantial part by persons residing in the Project Area, and to promote outreach to minority-owned, women-owned and other businesses. This requirement applies to both the construction and operations phases of the Project.

(2) This paragraph shall require the commercially reasonable efforts of Lessee and its contractors, but shall not require the hiring of any person, unless such person has the experience and ability and, where necessary, the appropriate trade union affiliation, to qualify such person for the job.

36.3.2 Utilization of Project Area Residents. The Community Outreach Plan will address the obligations of Lessee regarding the use of residents in and around the Project Area for the labor force for the construction of the Project.

36.3.3 Community Outreach Plan.

(1) Submission of Plan – Lessee shall meet with the CRA's Office of Contract Compliance to hold a preconstruction meeting. During the preconstruction meeting, Lessee shall be provided with the policies and procedures of the CRA regarding the MBE, WBE and OBE outreach efforts, including the development of a Community Outreach Plan. Lessee shall be provided samples of Community Outreach Plans which have been approved by the CRA. Prior to commencement of construction of any Alterations, Lessee shall submit to the

CRA Chief Executive Officer or his/her designee, for approval, the Community Outreach Plan for the Project. The Community Outreach Plan shall set forth the methods Lessee will use to comply with this Section 17.3. Upon receipt of the Community Outreach Plan, the CRA shall, within thirty (30) days, approve or disapprove the Community Outreach Plan, or provide to Lessee a statement of actions required to be taken in order for the Community Outreach Plan to be approved. If the CRA fails to respond within such thirty (30) day period, the Community Outreach Plan shall be deemed disapproved by the CRA. Lessee shall not Commence Construction of Phase IIB unless the Community Outreach Plan has been approved by the CRA.

(2) Contents of the Community Outreach Plan - The Community Outreach Plan shall include, at a minimum:

(i) Estimated total dollar amount (by trade) of all contracts and subcontracts to be let by Lessee or its prime contractor for the Improvements;

(ii) List of all proposed M/W/OBEs that will be awarded a contract by Lessee or the prime contractor(s);

(iii) Estimated dollar value of all proposed M/W/OBE contracts;

(iv) Evidence of M/WBE Certification by the City of all firms listed as MBE or WBE in the Community Outreach Plan;

Firms purporting to be M/WBE do not require M/WBE Certification if their contract amount is less than $25,000. Any firm for which the contract amount exceeds $25,000 and which is not certified by the City may not be considered an MBE or WBE for purposes of this Lease.

(v) Description of the actions to be taken to meet the project area resident and business utilization objectives.

(vi) Such other information and documentation with respect to the foregoing objectives as the CRA may reasonably deem necessary.

36.3.4 General Information.

(1) During the construction of any Alterations, Lessee shall provide to the CRA such information and documentation as reasonably requested by the CRA.

(2) Lessee shall monitor and enforce the affirmative outreach and equal opportunity requirements imposed by this Lease. If Lessee fails to monitor or enforce these requirements, Authority may declare Lessee in default of this Lease (subject to the notice and cure rights provided in this Lease) and thereafter pursue any of the remedies available under this Lease.

(3) As requested, Authority shall provide such technical assistance necessary to implement this Section 17.3.

36.4 **Reserved**.

36.5 **Reserved**.

36.6 **Living Wage; Contractor Program; Service Contractor Policy**.

Unless approved for an exemption by Authority or the CRA, Lessee agrees to comply with the CRA's Living Wage Policy, Contractor Responsibility Program, and Service Contractor Retention Policy attached hereto as Exhibit "C". The CRA shall be responsible for monitoring Lessee's compliance with such policies.

36.7 **Reserved.**

36.8 **Reserved.**

36.9 **CRA Standard Requirements.**

In addition to the policies set forth in this Article 17, Lessee shall comply with the CRA/LA Standard Requirements attached hereto as Exhibit "D" and incorporated herein by this reference as though set forth in full addressing (a) Preferences for Displacees, (b) Contractor Responsibility Policy, (c) Equal Benefits Policy, (d) Management and Marketing Plan, and (e) Affirmative Marketing Requirements; provided, however, that in the event of a conflict between the CRA/LA Standard Requirements attached hereto as Exhibit "D" and this Lease, this Lease shall control.

36.10 **CRA Local Hiring Requirements.**

Lessee shall comply with the CRA's local hiring responsibilities of construction employers on CRA assisted projects and local hiring responsibilities of permanent employers on CRA assisted projects attached hereto as Exhibit "E". Notwithstanding anything to the contrary set forth in this Lease, in the event of a default by Lessee under Exhibit "E", the remedies set forth in Exhibit "E" shall apply and such a default shall not constitute a default under this Lease.

37. **NO DISCRIMINATION.**

37.1 **Obligation to Refrain from Discrimination**.

Lessee covenants by and for itself and any successors in interest that there shall be no discrimination against or segregation of any person or group of persons on account of race, color, religion, creed, national origin, ancestry, sex, sexual preference/orientation, age, marital status, domestic partner status, disability, medical condition, Acquired Immune Deficiency Syndrome (AIDS) -acquired or perceived, or retaliation for having filed a discrimination complaint (nondiscrimination factors) in the construction, sale, lease, sublease, transfer, use, occupancy, tenure or enjoyment of the Premises or the Project, nor shall Lessee itself or any person claiming under or through it establish or permit any such practice or practices of discrimination or segregation with reference to the selection, location, number, use or occupancy of tenants, lessees, subtenants, sublessees, vendees or employees in the Premises or the Project. The foregoing covenants shall run with the land and remain in effect in perpetuity.

37.2 **Form of Nondiscrimination and Nonsegregation Clauses**.

All deeds, leases or other real property conveyance contracts entered into by Lessee on or after the date of execution of this Lease as to any portion of the Premises or the Project shall contain or be subject to substantially the following language:

37.2.1 In deeds or bills of sale: "Grantee herein covenants by and for itself, its successors and assigns, that there shall be no discrimination against or segregation of any person or a group of persons on account of race, color, religion, creed, national origin, ancestry, sex, sexual preference/orientation, age, marital status, domestic partner status, disability, medical condition, Acquired Immune Deficiency Syndrome (AIDS) — acquired or perceived, or retaliation for having filed a discrimination complaint (nondiscrimination factors), in the sale, lease, sublease, transfer, use, occupancy, tenure or enjoyment of the premises herein conveyed, nor shall the grantee, or any person claiming under or through grantee, establish or permit any such practice or practices of discrimination or segregation with reference to the selection, location, number, use or occupancy of tenants, lessees, subtenants, sublessees, vendees or employees in the premises herein conveyed. The foregoing covenant shall run with the land and remain in effect in perpetuity."

37.2.2 In leases: "The lessee herein covenants by and for lessee and lessee's heirs, personal representatives, and assigns, and all persons claiming under or through lessee, and this lease is made subject to the following condition: that there shall be no discrimination against or segregation of any person or group of persons on account of race, color, religion, creed, national origin, ancestry, sex, sexual preference/orientation, age, marital status, domestic partner status, disability, medical condition, Acquired Immune Deficiency Syndrome (AIDS) — acquired or perceived, or retaliation for having filed a discrimination complaint (nondiscrimination factors) in the leasing, subleasing, transferring, use, occupancy, tenure or enjoyment of the premises herein leased, nor shall the lessee, or any person claiming under or through lessee, establish or permit any such practice or practices of discrimination or segregation with reference to the selection, location, number, use or occupancy of tenants, lessees, subtenants, sublessees, vendees or employees in the premises herein leased."

37.2.3 In contracts: "There shall be no discrimination against or segregation of any person or group of persons on account of race, color, religion, creed, national origin, ancestry, sex, sexual preference/orientation, age, marital status, domestic partner status, disability, medical condition, Acquired Immune Deficiency Syndrome (AIDS) — acquired or perceived, or retaliation for having filed a discrimination complaint (nondiscrimination factors), in the sale, lease, sublease, transfer, use, occupancy, tenure or enjoyment of the property, nor shall the transferee, or any person claiming under or through transferee, establish or permit any such practice or practices of discrimination or segregation with reference to the selection, location, number, use or occupancy of tenants, lessees, subtenants, sublessees, vendees or employees of the property."

38. **DEFINITION OF TERMS; INTERPRETATION**.

38.1 **Meanings of Words Not Specifically Defined**. Words and phrases contained herein shall be construed according to the context and the approved usage of the English

language, but technical words and phrases, and such others as have acquired a peculiar and appropriate meaning by law, or are defined in Section 1.2, are to be construed according to such technical, peculiar, and appropriate meaning or definition.

38.2 **Tense; Gender; Number; Person**. Words used in this Lease in the present tense include the future as well as the present; words used in the masculine gender include the feminine and neuter and the neuter includes the masculine and feminine; the singular number includes the plural and the plural the singular; the word "**person**" includes a corporation, partnership, limited liability company or similar entity, as well as a natural person.

38.3 **Business Days**. For the purposes of this Lease, "**business day**" shall mean a business day as set forth in Section 9 of the California Civil Code.

38.4 **Parties Represented by Consultants, Counsel**. Both Authority and Lessee have entered this Lease following advice from independent financial consultants and legal counsel of their own choosing. This document is the result of combined efforts of both parties and their consultants and attorneys. Thus, any rule of law or construction which provides that ambiguity in a term or provision shall be construed against the draftsperson shall not apply to this Lease.

38.5 **Governing Law**. This Lease shall be governed by and interpreted in accordance with the laws of the State of California.

38.6 **Reasonableness Standard**. Except where a different standard is specifically provided otherwise herein, whenever the consent of Authority or Lessee is required under this Lease, such consent shall not be unreasonably withheld and whenever this Lease grants Authority or Lessee the right to take action, exercise discretion, establish rules and regulations or make allocations or other determinations, Authority and Lessee shall act reasonably and in good faith. These provisions shall only apply to Authority acting in its proprietary capacity.

38.7 **Memorandum of Lease**. The parties hereto shall execute and acknowledge a Memorandum of Lease, in recordable form and otherwise satisfactory to the parties hereto, for recording as soon as is practicable on or following the Commencement Date.

[Signatures Follow Next Page]

IN WITNESS WHEREOF, Authority and Lessee have entered into this Lease as of the date first above written.

AUTHORITY:

THE LOS ANGELES GRAND
AVENUE AUTHORITY,
a California joint powers authority

By: _____
Name: _____
Title: _____

APPROVED AS TO FORM:

Carmen Trutanich
City Attorney

By: _____
Timothy J. Chung
Deputy City Attorney

APPROVED AS TO FORM:

John F. Krattli
County Counsel

By: _____
Helen S. Parker
Principal Deputy County Counsel

LESSEE:

GRAND AVENUE M URBAN HOUSING, LLC,
a California limited liability company

By: _____
Name: William A. Witte
Title: President

[signatures continued on following page]

The undersigned hereby consents to and approves of the foregoing Phase IIB Ground Lease and agrees to be bound by the terms of Sections 6.8 and 10.1 thereof.

Dated: _____

CRA:

CRA/LA, A DESIGNATED LOCAL AUTHORITY, a public body formed under Health & Safety Code Section 34173(d)(3), as successor to the Community Redevelopment Agency of the City of Los Angeles

By: _____
Christine Essel
Chief Executive Officer

APPROVED AS TO FORM:

GOLDFARB & LIPMAN LLP

By: _____
Thomas Webber
CRA/LA Special Counsel

PHASE IIB GROUND LEASE

by and between

THE LOS ANGELES GRAND AVENUE AUTHORITY

and

GRAND AVENUE M URBAN HOUSING, LLC

[_____, 2013]

1. GENERAL TERMS 8
1.1 Lease 8
1.2 Defined Terms. 9

2. TERM 16
2.1 Term 16
2.2 Ownership of Improvements During Term 16
2.3 Reversion of Improvements 17

3. USE OF PREMISES 18
3.1 Specific Primary Use 18
3.2 Prohibited Uses 18
3.3 Active Public Use 20
3.4 Days of Operation 20
3.5 Signs and Awnings 20
3.6 Compliance with Regulations 20
3.7 Reservations 20
3.8 Continued Responsibility for Mitigation Measures 20

4. PAYMENTS TO AUTHORITY. 20
4.1 Net Lease 20
4.2 Lease Consideration 21
4.3 Timing of Lease Consideration Payments. 24
4.4 Payment and Late Fees. 24
4.5 Lessee's Books and Records. 25

5. ALTERATIONS 25
. 25
5.1 Reserved. 25
5.2 Application of Article 5 25
5.3 Plans and Specifications for Alterations 25
5.4 Conditions Precedent to the Commencement of Construction of Alterations 28
5.5 Manner of Construction 29
5.6 Use of Plans 30
5.7 Reserved 30
5.8 Protection of Authority 30
5.9 Subsequent Renovations 31
5.10 Force Majeure, Enforced Delay, Extension of Time of Performance 32
5.11 Notice of Completion of Alterations 33

6. CONDEMNATION 33
6.1 Definitions 33
6.2 Parties' Rights and Obligations to be Governed by Lease 33
6.3 Total Taking 33
6.4 Effect of Partial Taking 33

6.5 Effect of Partial Taking on Lease Consideration 34
6.6 Waiver of Code of Civil Procedure Section 1265.130 34
6.7 Payment of Award 34
6.8 Waiver of Right to Condemn 35

7. CERTAIN COVENANTS OF LESSEE 35
7.1 Reserved 35
7.2 Condominium Conversions. 36

8. INDEMNITY 36

9. INSURANCE 36
9.1 Policy Requirements 37
9.2 General Insurance Requirements 39
9.3 Disbursement of Proceeds 41
9.4 Failure to Maintain Coverage 41

10. MAINTENANCE AND REPAIR; DAMAGE AND DESTRUCTION 41
10.1 Lessee's Maintenance and Repair Obligations 42
10.2 Maintenance Deficiencies 42
10.3 Option to Terminate Under Certain Circumstances 43
10.4 No Option to Terminate for Other Casualty 45
10.5 No Authority Obligation to Make Repairs 45
10.6 Repairs Not Performed by Lessee 45
10.7 Other Repairs 45
10.8 Notice of Damage 45
10.9 Waiver of Civil Code Sections 45

11. TRANSFERS 45
11.1 Transfer Restrictions and Procedures. 45
11.2 Reserved. 47
11.3 Transfers 47

12. MORTGAGES 48
12.1 Authority Approval Required. 48
12.2 Foreclosure Transfers 49
12.3 Effect of Foreclosure 49
12.4 No Subordination 51
12.5 Mortgagee Protections 51
12.6 New Lease 54
12.7 Participation in Certain Proceedings and Decisions 54
12.8 Authority's Mortgages and Encumbrances 55
12.9 No Merger 55
12.10 Mortgagee Priority 55

13. DEFAULTS. 55
13.1 Defaults. 55

13.2 Notice of Default....55
13.3 Time to Cure. 56
13.4 Limitation on Events of Default 56
13.5 Remedies....56
13.6 Reserved....56
13.7 Authority's Right to Cure Lessee's Default....56
13.8 Default by Authority 57

14. HAZARDOUS MATERIALS. 57
14.1 Notice to Authority. 57
14.2 Use and Operation of Premises. 57
14.3 Remedial Actions. 57
14.4 Right of Contest. 58
14.5 Environmental Indemnity. 58

15. MISCELLANEOUS. 58
15.1 Quiet Enjoyment 58
15.2 Time is of the Essence 59
15.3 Reserved....59
15.4 Authority Disclosure and Lessee's Waiver....59
15.5 Holding Over 60
15.6 Waiver of Conditions or Covenants....60
15.7 Remedies Cumulative 60
15.8 Authorized Right of Entry 60
15.9 Place of Payment and Filing 61
15.10 Service of Written Notice or Process....61
15.11 Interest63
15.12 Captions 63
15.13 Attorneys' Fees 63
15.14 Amendments 63
15.15 Time For Director Approvals....63
15.16 Time For Authority Action 63
15.17 Estoppel Certificates 64
15.18 Indemnity Obligations 64
15.19 Lessee Representations, Warranties and Covenants....64

16. ARBITRATION. 65
16.1 Selection of Arbitrator 65
16.2 Arbitrator....65
16.3 Scope of Arbitration....65
16.4 Immunity....66
16.5 Section 1282.2....66
16.6 Statements of Position....67
16.7 Written Appraisal Evidence 67
16.8 Evidence....68
16.9 Discovery 68
16.10 Awards of Arbitrators 68

16.11 Powers of Arbitrator 69
16.12 Costs of Arbitration.....69
16.13 Amendment to Implement Judgment.....69
16.14 Impact of Gross Error Allegations.....69
16.15 Notice 70

17. COMPLIANCE WITH APPLICABLE LAWS AND AUTHORITY POLICIES. 70
17.1 Local, State and Federal Laws. 70
17.2 Non-Discrimination During Construction; Equal Opportunity. 70
17.3 Affirmative Action in Employment and Contracting Procedures, Including Utilization of Minority, Women, and Other Businesses. 71
17.4 Reserved. 73
17.5 Reserved. 73
17.6 Living Wage; Contractor Program; Service Contractor Policy. 73
17.7 Reserved. 73
17.8 Reserved. 73
17.9 CRA Standard Requirements. 73
17.10 CRA Local Hiring Requirements. 73

18. NO DISCRIMINATION. 73
18.1 Obligation to Refrain from Discrimination. 73
18.2 Form of Nondiscrimination and Nonsegregation Clauses. 74

19. DEFINITION OF TERMS; INTERPRETATION 74
19.1 Meanings of Words Not Specifically Defined 74
19.2 Tense; Gender; Number; Person 75
19.3 Business Days 75
19.4 Parties Represented by Consultants, Counsel 75
19.5 Governing Law 75
19.6 Reasonableness Standard 75
19.7 Memorandum of Lease 75

EXHIBITS AND SCHEDULES

Exhibit "A" Legal Description of Premises
Exhibit "B" Legal Description of Affordable Premises
Exhibit "C" Living Wage Policy, Contractor Responsibility Program and Service Contractor Retention Policy
Exhibit "D" CRA/LA Standard Requirements
Exhibit "E" CRA Local Hiring Responsibilities
Exhibit "F" Description of Mitigation Measures
Exhibit "G" First Sale Profit Payment Illustrative Examples

Schedule 1.2 Offsite Publicly Owned Improvements

EXHIBIT "C"

SCOPE OF DEVELOPMENT

I. GENERAL INFORMATION

The Project is located in downtown Los Angeles and consists of the following components: (1) the development of certain non-contiguous parcels referred to as Parcels Q, L, M-2, and W-2 (and possibly including W-1), and (2) streetscape improvements along Grand Avenue adjacent to Parcel Q and in front of Parcels L and M-2. Parcels Q and W-2 are currently owned by the County; Parcels L and M-2 are currently owned by the CRA/LA. The fifth parcel, referred to as Parcel W-1, is currently owned by a private third party and may be acquired by Developer. The Project development sites currently consist of surface parking, temporary parking structures or vacant land.

All five development parcels and the portion of Grand Avenue between First Street on the north and mid-block between Fourth Street and Fifth Street on the south are located within the CRA/LA's Bunker Hill Redevelopment Project Area. The area proposed for the Civic Park and the portion of Grand Avenue between the I-101 Hollywood Freeway and First Street and the half-block portion between Fourth and Fifth Streets are all located within the CRA/LA's Amended Central Business District (CBD) Redevelopment Project Area (See Exhibit "B" to the DDA).

The Project shall conform to the provisions, design criteria, and property development standards set forth in this Scope of Development.

II. GENERAL DESCRIPTION

The goal of the Project is to provide an economically viable, architecturally distinguished, community-oriented, regional destination, mixed-use development with welcoming public open spaces that will create, define, and celebrate the Civic and Cultural Center as a regional destination in downtown Los Angeles. The Project aims to accomplish this goal through the construction of up to 3.2 million square feet of mixed-use development on non-contiguous parcels, and possibly improvements to the streetscape along Grand Avenue from Fifth Street to Cesar E. Chavez Avenue.

The Project incorporates commercial (retail, office and hotel), residential and museum uses with an emphasis on creating attractive and inviting outdoor spaces, enhancing connections to adjacent neighborhoods and view corridors highlighting Disney Hall, Cathedral of Our Lady of The Angels, and City Hall. The five-phased development will include affordable and market-rate housing with multi-level retail and entertainment spaces built around outdoor plazas and public spaces. The approved Conceptual Plan for the Project is illustrated in Attachments 1, 2 and 3 hereto, and has been updated by subsequent approvals affecting Parcels L, M and the Civic Park.

The Project consists of two development options, referred to as the "**Project with Office Building Option**" and the "**Project with Additional Residential Development Option.**" Under the Project with Office Building Option, the total development program includes up to

449,000 square feet of retail, a hotel of up to 275 hotel rooms with approximately 15,000 square feet of meeting space, up to 2,060 market-rate and affordable residential units (1648 market rate, 412 affordable) and approximately 681,000 square feet of office space, which may be a County Office Building if the County exercises its option to relocate the Hall of Administration under Section 213 of this Agreement. However, should the County not elect to locate a new Hall of Administration within the Project, and if Developer does not elect to construct office space in Phase III of the Project, the office component would be replaced under the Project with Additional Residential Development Option with up to 600 additional residential units, 20 percent of which (up to 120 units) would be provided as affordable housing. In this scenario, the total development proposed for the five parcels would include up to 2,660 residential units, 20 percent of which (up to 532 units) would be provided as affordable housing. It should be noted that these maximum development scenarios assume that the Developer Parcel (Parcel W-1 which is currently privately-owned) will be purchased and ultimately included in the Project.

MASTER PLAN

Projected Program	Project with Office Building Option		Project with Additional Residential Development Option	
	Max. Sq. Ft.	Max. Units/Spaces	Max. Sq. Ft.	Max. Units/Spaces
Hotel	315,000*	275	315,000*	275
Retail	449,000		449,000	
Office	681,000	N/A	0	N/A
Residential	2,155,000	2,060	2,836,000	2,660
Parking		5,025	N/A	5,245
	3,600,000		**3,600,000**	
Civic Park	16 acres		16 acres	

* Hotel floor area includes approximately 15,000 square feet of meeting space.

References to square feet of development in this Scope of Development shall refer to Floor Area as defined in this Agreement.

SUMMARY OF MASTER PLAN RESIDENTIAL UNITS

	Project with Office Building Option	Project with Additional Residential Development Option
	Max. Units	Max. Units
Market Rate	1,648	2,128

Affordable Housing	412	532
Total	**2,060**	**2,660**

The Project includes an Equivalency Program that would allow the composition of on-site development to be modified to respond to future needs in a manner that does not increase the Project's impacts on the environment. The Equivalency Program provides flexibility for modifications to land uses and square footages within the Parcels, subject to City and other governmental regulatory approval. Within this framework, land uses can be exchanged for certain other permitted land uses so long as the limitations of the Equivalency Program are satisfied and no additional environmental impacts occur. All permitted Project land use increases can be exchanged for corresponding decreases of other land uses under the proposed Equivalency Program (See Attachment 4 hereto). In addition, Developer may allocate density on the Development Site between Phases I, IIA, IIB, IIC, and III, up to the Maximum Development Site Floor Area of 3,200,000 Sq. Ft. and shall be allowed to shift density between uses prior to constructing a Phase so long as Developer builds the minimum Floor Area in each Phase, as shown in Exhibit "R", and does not exceed the Maximum Development Site Floor Area in total; the project description in the EIR; or the City's maximum permitted FAR.

If the County and Developer elect to not pursue the Project with Office Building Option, the Developer is entitled under the Equivalency Program to elect to convert the office space under the Project with Office Building Option to retail space, or a combination of retail and residential space using the office to retail conversion factor, and/or the office to residential conversion factor, as provided in the chart (Attachment 4 hereto) illustrating the Equivalency Program. As an example, should the County not elect to pursue the Project with Office Building Option, the 681,000 square feet of office use on Parcel W-2 could be replaced using the conversion factor of 0.316 to 215,196 square feet of retail square footage.

The Project will include the following development in five separate phases:

A. Phase I (Parcel Q)

The first Phase will be built on Bunker Hill Redevelopment Parcel Q, an approximately 140,263 square foot parcel known as Lot 1 of Tract No. 28761, Bk. 926 Pgs. 5 through 8, comprising a rectangular area generally bounded by Grand Avenue, First Street, Olive Street, and Upper Second Street, directly east across the street from the Walt Disney Concert Hall. Phase I will comprise not less than 1.0 million square feet of retail, hotel, and residential uses and consist of two high-rise hotel/residential towers and three low-rise structures containing restaurant, retail and banquet/meeting room space. Tower 1, a distinctive high rise tower at the corner of Second and Grand, will house a hotel of up to 275 rooms with approximately 15,000 square feet of meeting space and approximately 250 market rate condominiums on the upper floors. At Olive and First Streets, a mid-rise residential tower (Tower 2) will combine approximately 150 market rate condominiums with 100 rental Affordable Housing Units. Recreational amenities such as pools, spas and exercise rooms would be available to residents and hotel guests. Altogether, Phase I will contain up to 500 residential units, 20% of which will be rental Affordable Housing Units.

These two towers will flank plazas and courtyards with outdoor seating and dining areas that will ultimately connect Grand Avenue to Hill Street, and may include a food market, a health club, bookstore, restaurants, several signature retailers and a series of small shops. Most structures will be designed with outdoor dining areas, terraces and roof decks that provide views to the Walt Disney Concert Hall and surrounding areas. The site, which slopes quickly downhill from Grand Avenue to the east, will allow for a mixture of entertainment, dining and shopping uses to be spread over several integrated levels as well as create activity along all street edges. Phase I of the Project will provide for approximately 1,510 parking spaces including approximately 755 parking spaces for residential owners and renters and residential visitors, and Public Parking of approximately 755 parking spaces for hotel and retail users will be provided.

PHASE I - PARCEL Q			
Projected Program		Example SF	Example Units/Spaces
Hotel		315,000	275
Retail		284,000	N/A
Residential		632,937	500
	Market Rate - Condos		
Tower 1	*(above hotel)*		*250*
Tower 2	*(above apartments)*		*150*
	Affordable – apartments		
Tower 2	**(below condos)**		*100*
Parking*			1,510
	Residential		*755*
	Commercial		*755*
Phase I Totals		**1,231,937**	

*Approximate number of parking spaces

Additional components of the Project to be constructed by Developer concurrently with Phase I include a 16-acre Civic Park and the installation of Grand Avenue Streetscape and Public Space Improvements. The design and development of the Civic Park are governed by the Civic Park Design Agreement and the Civic Park Development Agreement. The proposed Civic Park would revitalize, expand upon and activate the existing Civic Center Mall through a new design that would be functional and more easily accessible to the public. The intention of the redesigned park is to create a great civic gathering place for small to large-scale events a well as for day-to-day activities. The Civic Park is envisioned as several distinct areas that will be landscaped and programmed to serve a variety of uses. On the west end across from the Music Center from Grand Avenue to Hill Street, the Civic Park will be programmed with cultural, arts, and entertainment events. The existing garage ramps will be redesigned to allow a grand terrace to connect Grand Avenue to a new great lawn. The center of the Civic Park, from Hill Street to Broadway, will feature a colorful garden area with both open and intimate spaces. The east end, from Broadway to Spring Street, will be designed to host civic celebrations and community activities and complement the western entrance to City Hall. Surface parking currently existing on the easternmost area of the park would be removed and parking would be re-established on

the lower levels of parking structure below the Court of Flags. The Civic Park as completed to date opened in the summer of 2012.

B. Phase IIA, Phase IIB and Phase IIC (Parcels L and M-2)

The Phase IIA, Phase IIB and Phase IIC portions of the Project will, collectively, consist of development of housing, retail, a museum and parking on Bunker Hill Redevelopment Parcels L and M-2, and the development of the Public Plaza on the Plaza Parcel.

Specifically, Phase IIA will consist of a museum of up to 120,000 square feet to be constructed by Phase IIA Developer over Parcel L and a parking garage containing approximately 370 parking spaces to be constructed by Phase IIA Developer over Parcel L, together with the Phase IIA Streetscape and the Public Plaza to be constructed on the Plaza Parcel. Notwithstanding the omission of the "cultural/retail" designation from Phase II in Attachment 2 to this Exhibit, the cultural use contemplated by this Section B may be substituted for some of the retail indicated on Attachment 2. The Grand Avenue Streetscape to be constructed by Phase IIA Developer on Upper Grand Avenue will include a turn-out/curb cut in front of the Phase IIB Parcel for passenger loading and unloading.

Phase IIB will consist of a residential tower of approximately 20 stories, to be constructed by Phase IIB Developer on Parcel M-2, containing 271 rental units; 56 of the units (including one manager's unit) in Phase IIB shall be rental Affordable Housing Units. Phase IIB will include a parking garage containing approximately 280 parking spaces for the renters of the non-Affordable Housing Units in Phase IIB. Per Section 707 of the Original DDA, the Affordable Housing Units in Phase IIB shall be reserved for occupancy by Sixty Percent Households and, in Phase IIB Developer's sole discretion, by Very Low Income Households and/or Forty Percent Households. Retail improvements, consisting of between approximately 7,000 and 19,500 square feet, will be constructed on Grand Avenue as part of Phase IIA, Phase IIB and Phase IIC; provided that Phase IIB shall include retail improvements consisting of not less than approximately 5,500 square feet of indoor restaurant space plus approximately 1,750 square feet of outdoor restaurant patio area (totaling approximately 7,250 square feet of restaurant space).

Phase IIC will consist of a residential tower of at least six (6) stories, containing for-sale condominium units and/or rental units, to be constructed by Developer on the Phase IIC Parcel. Phase IIC may, at Developer's option, include incidental ground floor retail improvements. Phase IIA and Phase IIB collectively will provide to Phase IIA, Phase IIB and Phase IIC approximately 650 parking spaces for residential owners and renters and their visitors, public parking for retail employees and retail visitors, and parking for employees and visitors of the museum. The retail program in Phase IIB may be increased pursuant to the Equivalency Program. Notwithstanding Section 105 of the Original DDA, the minimum Floor Areas set forth in Exhibit "R" to the Original DDA shall not apply to Phase IIA, Phase IIB or Phase IIC. Without limiting the generality of the foregoing Scope of Development for Phase IIA, Phase IIB and Phase IIC, the following table is only an example of certain permitted specifications for Phase IIA and Phase IIB:

PHASE IIA and PHASE IIB - PARCELS L AND M-2			
Projected Program		Example SF	Example Units/Spaces
Retail		7,500	N/A
Residential		250,000	271
	Market Rate		*215*
	Affordable		*56*
Museum		120,000	
Parking			650
	Phase IIA		*370*
	Phase IIB		*280*

The residential portion of the Phase IIB Improvements shall consist of approximately 250,000 square feet of Floor Area. Development of Phase IIA may proceed independently of the development of Phase IIB and Phase IIC, and development of Phase IIB and Phase IIC may proceed independently of the development of Phase IIA. Development of Phase IIB may proceed independently of the development of Phase IIC; provided that, in any event, construction of Phase IIB must commence prior to construction of Phase IIC.

C. Phase III (Parcel W-2) (may include the concurrent development of Parcel W-1, if an acquisition or ground lease agreement is entered into by Developer)

Phase III of the Project will be constructed on Bunker Hill Redevelopment Parcel W-2 (and may possibly include W-1) and consist of residential and retail uses or possibly office uses. Phase III consists of two development options: the Project with Office Building Option and the Project with Additional Residential Development Option.

Under the Project with Office Building Option, up to 710 "for sale" condominium and/or rental residential units, with 20 percent (142) Affordable Housing Units, will be included. The residential units would surround a retail area of approximately 64,000 square feet of retail, restaurant, and/or entertainment uses that would be linked to retail space on Phase I (Parcel Q) by a pedestrian bridge spanning across Olive Street. Subject to and consistent with Section 213 of the DDA, under the Project with Office Building Option, a new Office Building, containing approximately 681,000 square feet of floor area, may also be developed in this Phase. As previously described, the retail program in Phase III may be increased pursuant to the Equivalency Program. Phase III of the Project will provide approximately 1,855 parking spaces for residential owners, renters and visitors, and public parking for retail users will also be constructed during this Phase. Phase III will include parking for the County Office Building, if applicable.

PHASE III - PARCELS W-1 AND W-2 PROJECT WITH OFFICE BUILDING OPTION		
Projected Program	Example SF	Example

			Units/Spaces
Retail		64,000	N/A
Office		681,000	N/A
Residential		692,733	710
	Market Rate		*568*
	Affordable		*142*
	Subtotal		*710*
Parking*			1,855
	Residential		*1,070*
	Commercial		*785*
Phase III Totals		**1,437,733**	

*Approximate number of parking spaces

In lieu of the Office Building improvements (dependent upon sufficient demand for such space), additional housing may be developed under the Project with Additional Residential Development Option. Approximately 600 additional housing units, 20% (120 units) of which would be Affordable Housing Units, and approximately 320 additional parking spaces may be substituted and constructed instead of office space. Under the Additional Residential Development Option, a total of up to 1,310 residential units would be provided, including up to 262 Affordable Housing Units. As previously described, the retail program may be increased pursuant to the Equivalency Program.

PHASE III - PARCELS W-1 AND W-2

b. PROJECT WITH ADDITIONAL RESIDENTIAL
c. DEVELOPMENT OPTION

Projected Program			Example SF	Example Units/Spaces
Retail			64,000	N/A
Office			0	N/A
Residential			1,278,333	1,310
	Market Rate			*1,048*
	Affordable			*262*
		Subtotal		*1,310*
Parking*				2,175
	Private			*1,971*
	Public			*204*
Phase III Totals			**1,342,333**	

*Approximate number of parking spaces

The Phase III Improvements (Parcel W-2 only) shall consist of a minimum of 700,000 square feet of Floor Area and a maximum up to the remaining unused portion of the Maximum Development Site Floor Area, including the Office Building, if applicable.

III. DESIGN GUIDELINES

The following design guidelines, the satisfaction of which will be subject to CRA/LA, or

County, as appropriate, approval, shall apply to the Project; provided, however, that such guidelines will not apply to the Civic Park, which is subject to a separate design and development process pursuant to the Civic Park Design Agreement and the Civic Park Development Agreement, and such guidelines will not apply to the County Office Building.

A. Ground Floor/Street Level Uses:

Ground floor design and uses, along with the primary building entrances, must contribute to the creation and reinforcement of street activity and identity along Upper Grand Avenue, Hope Street, First Street, Olive Street and Hill Street, and recognize and appropriately incorporate the existing access to the Metro Rail Red Line at First and Hill Streets. With the exception of Parcel W-2, primary pedestrian entrances and orientation of the Development must be along the Grand Avenue frontage, and treated as the "front door" of the Project, with appropriate entry plazas and landscaping located at street level. Appropriate secondary entrances and orientation of the Development must also be provided along First Street, Hope Street and Olive Street.

Activation of the street frontage and interaction with street activity is a major design requirement. This may be achieved by incorporating active retail and/or public spaces into the building design, and with appropriate retail frontage along Grand Avenue and portions of First Street. Activity generating uses such as retail shops, restaurants, food market, jazz clubs, movie theaters, bookstores, residential building entries and the like are strongly encouraged. Community-serving uses such as newsstands, flower shops, gift shops, card shops, food markets, drug stores and dry cleaners are also encouraged at the ground level. Professional offices are permitted above the first floors of buildings.

All publicly accessible space, including sidewalks, building lobbies, gardens and plaza areas, must be attractively landscaped, and designed and finished with high quality materials. The design of Parcels L and M-2 must provide for a connection between the two Parcels over GTK Way at the Upper Grand Avenue level in order to create a continuous and active streetscape along Upper Grand Avenue.

B. Consistency with Grand Avenue Master Plan:

Development of the Project must be also consistent with the recently completed Grand Avenue Master Plan entitled: "Reimagining Grand Avenue." Concerning the street itself, the plan envisions widened sidewalks, improved landscape, and amenities including lighting, benches, kiosks, newsstands, and other streetscape elements. The Plan promotes a consistent approach to streetscape design along Grand Avenue from Cesar E. Chavez Avenue to Fifth Street. The Plan also envisions the renovation and extension of the County Mall into a new Civic Park for Los Angeles. It is imagined that the Civic Park and the new development on Grand Avenue will attract a regional market and that these two elements will be mutually supportive and collaborative in the scheduling and creation of events, and in attracting the public to Grand Avenue in general.

C. Parking and Access:

The Project must provide Municipal Code required parking on site. For residential, retail and hotel uses, code parking must be provided, including adequate residential guest parking. For

commercial office uses, parking should be provided at the rate of not less than one space for every 1,000 square feet of development. Given the proximity of public transit to the Project, reduced parking or shared parking is encouraged, subject to the approval of the City. The City of Los Angeles Department of Building and Safety will calculate the exact number of required parking spaces to be provided. Parking must be provided below the elevation of Upper Grand Avenue. Any visible parking structure is subject to design approval and must be, at a minimum, screened from public view. Parking and loading access points are prohibited along Upper Grand Avenue. They are to be located primarily along GTK Way, Hope Street, Second Street, Olive Street, or Lower Grand Avenue.

D. Building Materials and Finishes:

Building materials, color and design must be of the quality represented by other major developments in the area. Materials selected should provide a sense of permanence and an attractive street level environment. Glazing for street level commercial uses should allow indoor functions to be visible from the outside. The use of highly reflective or mirrored glass material is discouraged.

E. Building Height:

The elevation of the uppermost-occupied floor may not exceed 65 stories above the elevation of Upper Grand Avenue.

F. Building Setbacks:

Buildings located on Parcels L and M-2 must be setback from the existing east curb line along Upper Grand Avenue at least 24 feet. This setback may be used for sidewalk cafes and other street related functions that will provide activity along Upper Grand Avenue. Buildings on Parcel Q must be setback from the existing curb line a minimum of 15 feet. Setbacks on other streets shall be sufficient to assure a minimum sidewalk width, after any curb line adjustments that may be required by the City, as described below in Section L. Notwithstanding the foregoing provisions of this Section F, the required setback of 24 feet with respect to buildings located on Parcels L and M-2 may be satisfied either by (i) an average setback from Grand Avenue of approximately 24 feet over both Parcels L and M-2, including the plaza over GTK Way, or (ii) otherwise designing the Museum in order to further the Downtown Design Guidelines' goal of creating welcoming, expansive frontage on Grand Avenue and provide for an open-to-the-public, visible and accessible museum, for example by providing at least 7,000 square feet of publicly accessible space immediately inside the Museum building and visible from Grand Avenue.

G. Building Placement:

Location of tower components on Parcels L and M-2 must be particularly sensitive to their location adjacent to the Walt Disney Concert Hall. Smaller floor plates are encouraged to offer opportunities to stagger the placement of the towers on these parcels, thus achieving appropriate setbacks from the concert hall and, at the same time, maximizing views from residential units.

H. Building Massing:

The distribution of building mass on Parcel Q must be carefully considered to respect the prominence of the Walt Disney Concert Hall immediately across the street, as well as the low height of the Colburn School immediately to the south. Ideally, two towers will be built on Parcel Q, allowing for a segregation of office and hotel and/or residential uses as well as a distribution of building mass. Entertainment and retail uses should be located on the lower levels of both towers, and provide easy access to the street level.

I. Lighting:

Nighttime lighting of building tops, entrances, and other architectural features is encouraged, except where such lighting would be disruptive to or incompatible with adjacent residential developments. Pedestrian paths and public spaces should be lighted in a manner that results in a natural color spectrum while meeting energy conservation standards while providing a sense of security. Nighttime lighting in public areas must be adequate to meet security needs but should be shielded or diffused and not so harsh as to create unnecessary glare or dissipation into the night sky.

J. Landscaping:

All publicly accessible spaces, including sidewalks, lobbies, entrance areas, and residential plaza spaces, shall be attractively landscaped or finished in high-quality materials. Street trees and other landscaping shall be provided within public sidewalks in a manner and quality consistent with City streetscape standards and with the streetscape guidelines proposed in the Grand Avenue Master Plan.

K. Signage:

The size, color, lighting, and design of all exterior signs are subject to approval. All signage must conform to the CRA/LA Skyline Signage Policy and the Bunker Hill Design for Development regarding signage.

L. Sidewalk Standards:

Developer shall construct and/or improve all sidewalks adjoining the Development Site. Minimum sidewalk widths, setbacks, and build-to lines for all public streets affected by the Project must conform to the Grand Avenue Master Plan and the CRA/LA's Master Plan of Downtown Street Widths. Specifically, minimum sidewalk widths will be 15 feet along Upper Grand Avenue and First Street, Olive, and Hill Streets, and 10 feet along GTK Way. The sidewalk on Second Street, which is not indicated in the Master Plan of Downtown Street Widths, will have a minimum width of 12 feet. Some or all of this 12-foot minimum-width may be a pedestrian arcade. Streetscape elements (paving, lighting, landscape, etc.) must conform to the Grand Avenue Master Plan. The minimum sidewalk width along Hope Street will be 10 feet rather than 15 feet, with the balance available for landscaping, SUSMP purposes, public access to Phase IIB and Phase IIC, and related purposes.

M. Security:

The design of the Project must be responsive to the security needs of tenants, visitors, and patrons. Buildings must incorporate lighting that reinforces entrances, provides a safe level of illumination and is compatible with the design of the building facades.

N. Energy:

The Project must be designed efficiently to minimize the energy required to heat, cool, and light the Project over its lifetime. The Project must comply with the State of California Energy Conservation standards and, to the extent feasible, seek to exceed such standards through the use of state-of-the-art energy-conscious design practices. Additional measures may include, but not be limited to, building placement and orientation, architectural features, open spaces, landscaping, mechanical and operational measures.

O. Solid Waste Management:

The Project must include a coordinated resource conservation and recycling program, designed to reduce the amount of solid waste materials going to local landfills. During Project construction, measures for maximizing the recycling of construction debris must be incorporated, including a layout for source separation of materials and recycling bins and the utilization of contractor(s) specializing in demolition and construction waste management. Trash compactor facilities must be provided in all residential units, where feasible, and recycling bins and chutes must be provided at appropriate locations within the Project to promote the recycling of paper, glass, metal and other recyclable materials.

P. Sustainable Development:

The proposed development must incorporate "sustainable" building methodologies and technologies. Sustainable technologies and methodologies could include, but are not limited to, the conservation of water through the use of water saving fixtures, drought resistant plants to reduce the amount of watering, installation of double pane windows, installation of 1.5 gallon toilets in each dwelling unit, insulation on hot water piping at exposed areas, and the use of forced heating systems as established by the California State Title 24 energy efficiency guidelines.

ATTACHMENT 1 TO EXHIBIT "A"

CONCEPTUAL PLAN – ALL PARCELS

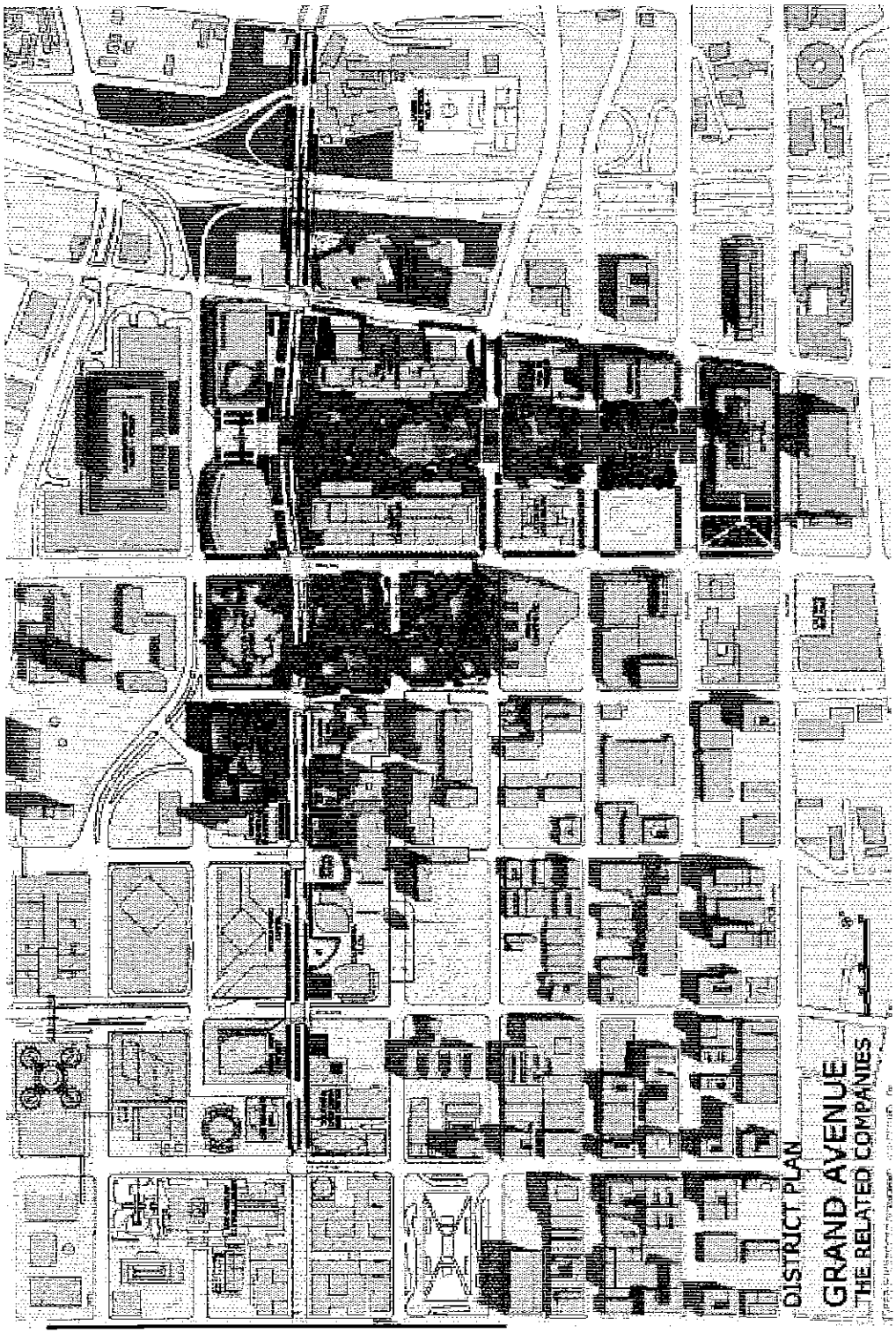

ATTACHMENT 2 TO EXHIBIT "A"

CONCEPTUAL PLAN –PARCELS L, M-2, Q, W-1 AND W-2

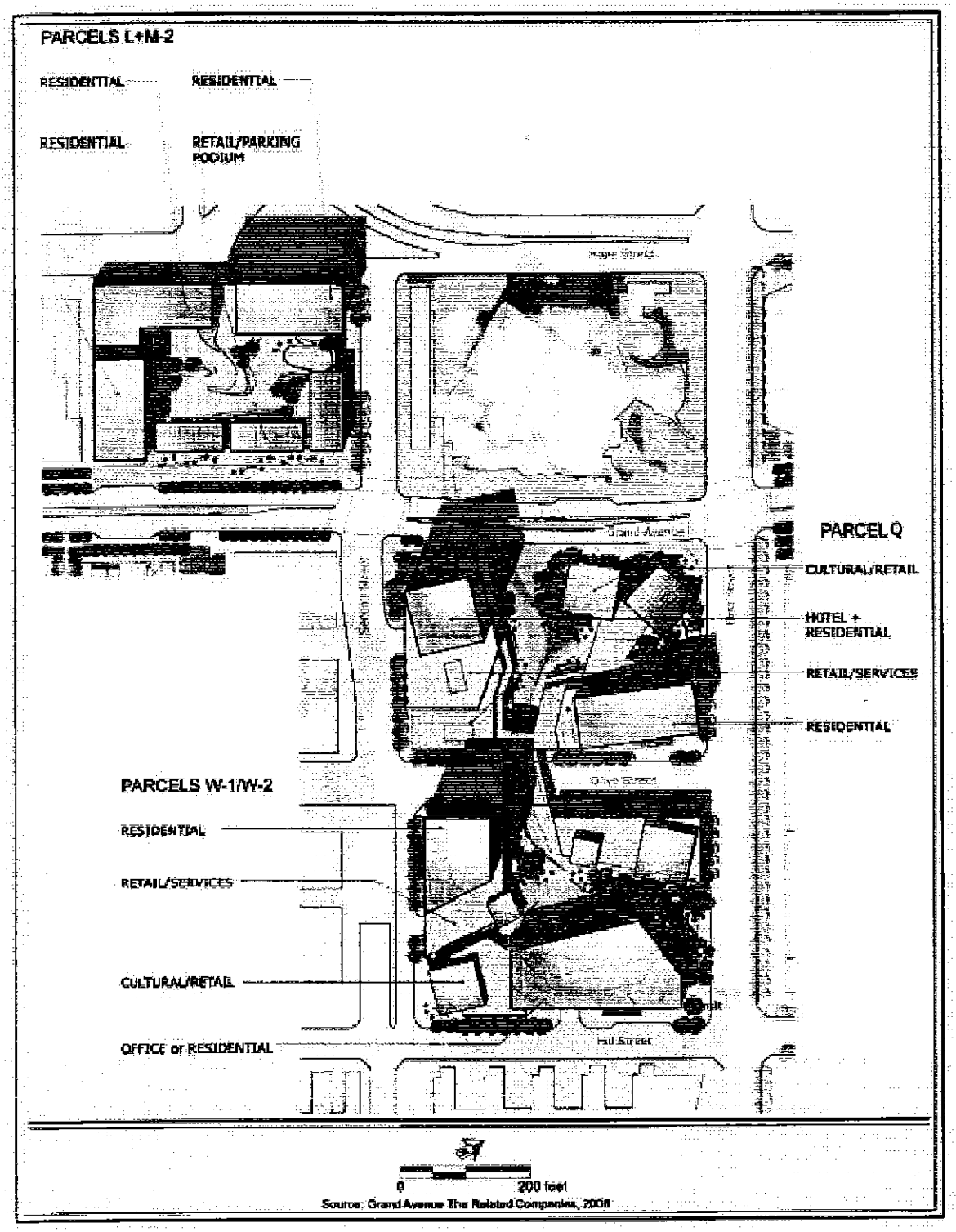

ATTACHMENT 3 TO EXHIBIT "A"

CONCEPTUAL PLAN –CIVIC PARK

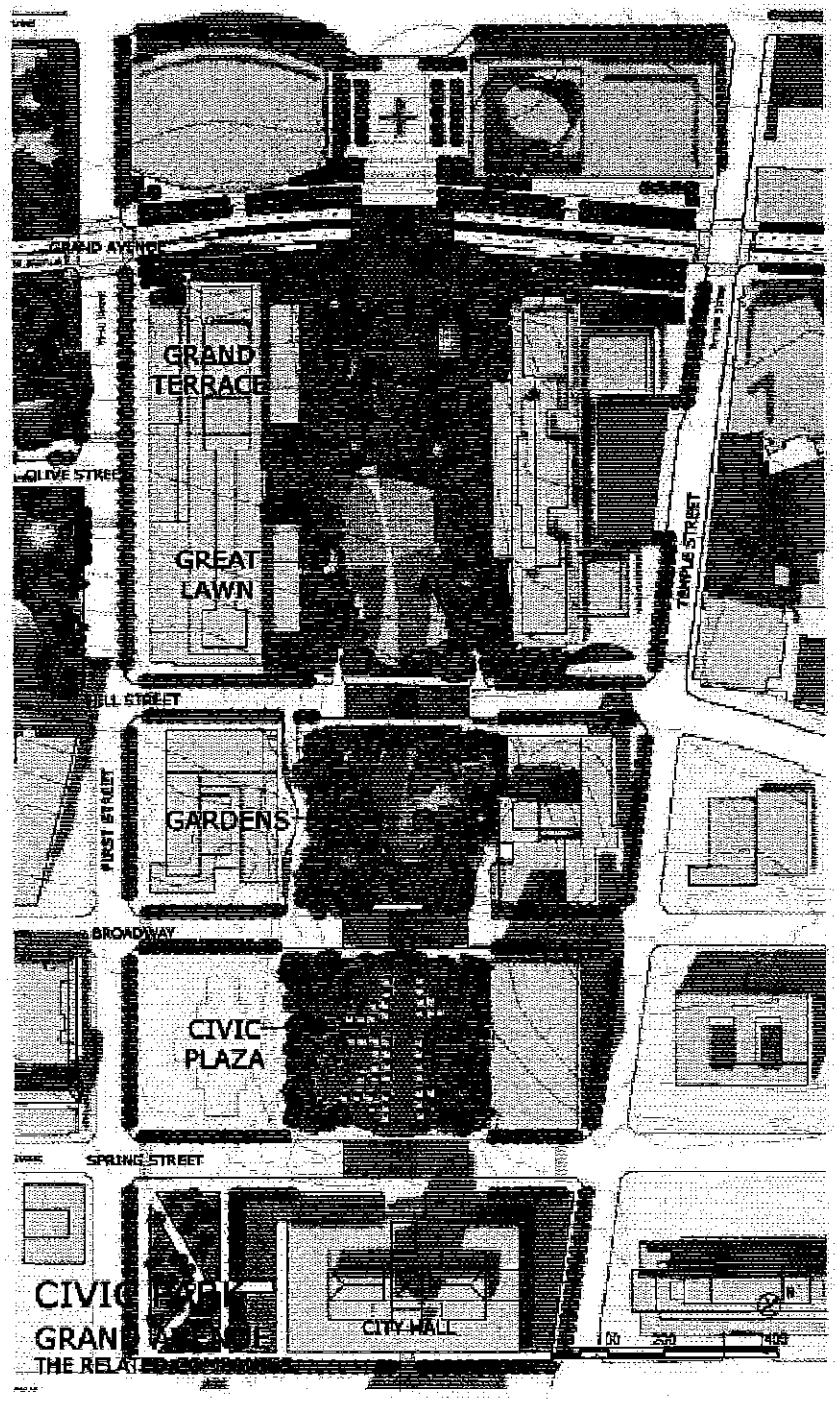

ATTACHMENT 4 TO EXHIBIT "A"

EQUIVALENCY PROGRAM CHART

Equivalency Matrix - Land Use Conversion Factors

To This Land Use → / From This Land Use ↓	Units	Condo-miniums	Apart-ments	Hotel	Market	Retail	Restaurant	Event Facility	Health Club	Office
		DU's	DU's	Rooms	1,000 sf	1,000 sf	1,000 sf	Seats	1,000 sf	1,000 sf
Condominiums	DU's	NA	1.400	0.700 [1]	0.062 [2]	0.098 [2]	0.080 [2]	4.667 [3]	0.201 [2]	0.311 [2]
Apartments	DU's	0.714	NA	0.500 [1]	0.044 [2]	0.070 [2]	0.057 [2]	3.333 [3]	0.144 [2]	0.222 [2]
Hotel	Rooms	1.429 [4]	2.000 [4]	NA	0.088 [5]	0.140 [5]	0.114 [5]	6.667 [6]	0.288 [5]	0.444 [5]
Market	1,000 sf	16.129 [7]	22.727 [7]	11.364 [8]	NA	1.596	1.293	75.833 [9]	3.273	5.056
Retail	1,000 sf	10.204 [7]	14.286 [7]	7.143 [8]	0.627	NA	0.810	47.500 [9]	2.050	3.167
Restaurant	1,000 sf	12.500 [7]	17.544 [7]	8.772 [8]	0.773	1.235	NA	58.667 [9]	2.532	3.911
Event Facility	Seats	0.214 [10]	0.300 [10]	0.150 [11]	0.013 [12]	0.021 [12]	0.017 [12]	NA	0.043 [12]	0.067 [12]
Health Club	1,000 sf	4.975	6.944	3.472	0.306	0.488	0.395	23.256	NA	1.544
Office	1,000 sf	3.215	4.505	2.252	0.198	0.316	0.256	14.925	0.648	NA

Numbers shown in table represent conversion factors from one land use to another, to maintain trip totals equivalent to and not exceeding those assumed in the DEIR.

Numbers are based on weekday P.M. peak hour trip generation data, and average trip rates for each land use type over the entire Project.

For example, if it was desired to convert Project square footage from retail to office uses, the conversion factor to be used is 3.167, i.e. 75,000 sf of retail uses could be replaced with 237,525 sf of office uses (75,000 x 3.167) without increasing the overall number of trips.

Ratios are conversion factors from 1,000 sf to 1,000 sf, except where specified by footnotes as described below:

1. *Ratios are conversion factors from DU's to rooms.*
2. *Ratios are conversion factors from DU's to 1,000 sf.*
3. *Ratios are conversion factors from DU's to seats.*
4. *Ratios are conversion factors from rooms to DU's.*
5. *Ratios are conversion factors from rooms to 1,000 sf.*
6. *Ratios are conversion factors from rooms to seats.*
7. *Ratios are conversion factors from 1,000 sf to DU's.*
8. *Ratios are conversion factors from 1,000 sf to rooms.*
9. *Ratios are conversion factors from 1,000 sf to seats.*
10. *Ratios are conversion factors from seats to DU's.*
11. *Ratios are conversion factors from seats to rooms.*
12. *Ratios are conversion factors from seats to 1,000 sf.*

Source: The Mobility Group, May 2006.

EXHIBIT "D"

UPDATED SCHEDULE OF PERFORMANCE[1]

THE FOLLOWING THREE (3) REQUIREMENTS APPLY TO ALL PHASES:	
CRA Preconstruction Meeting. Developer, Phase IIB Developer and Phase IIC Developer shall meet with the CRA's Office Of Contract Compliance as required by Section 703(3) of the Original DDA.	At least sixty (60) days prior to commencement of grading. With respect to Phase IIB only, prior to commencement of grading. This requirement has been completed for the Museum.
Submission – Community Outreach Plan. Developer, Phase IIB Developer and Phase IIC Developer shall submit the Community Outreach Plan required by Section 703(3) of the Original DDA to the CRA Chief Executive Officer or his/her designee.	At least thirty (30) days prior to commencement of grading. With respect to Phase IIB only, at least two (2) weeks prior to commencement of grading. This requirement has been completed for the Museum.
Review and Approval – Community Outreach Plan. The CRA shall approve or disapprove the Community Outreach Plan.	Within thirty (30) days after receipt by the CRA. This requirement has been completed for Museum.
PHASE I IMPROVEMENTS:	
Submission – Construction Budget Based on 80% Construction Documents. Developer shall provide Authority with a proposed construction budget for the Phase I Improvements based on the 80% Construction Documents.	No later than 120 days before the application for the initial building permit for the Phase I Improvements.
Review and Approval – Construction Budget Based on 80% Construction Documents. Authority shall approve or disapprove, as set forth in Section 408(1) of the Original DDA, the proposed construction budget for the Phase I Improvements based on the 80% Construction Documents. Upon approval by Authority, such proposed budget shall	Within forty-five (45) days after receipt by Authority.

[1] This Schedule of Performance reflects the status of the above-referenced requirements/milestones as of the date of the Third Amendment to Disposition and Development Agreement to which this Exhibit is attached.

constitute the "Phase I Final Construction Budget" contemplated by Section 408(1) of the Original DDA.	
Submission – Revised Concept Art Plan and Landscape Plan. Developer shall prepare and submit to Authority its Revised Concept Art Plan and Landscape Plan for the Phase I Improvements.	No later than 180 days before the application for the initial building permit for the Phase I Improvements.
Orientation. Developer shall coordinate a preconstruction orientation meeting with Developer's general contractors and Authority.	Prior to commencement of grading activities in connection with the Phase I Improvements.
Construction Sign. Developer shall cause to be erected on the Phase I Parcel a construction sign describing the development and the participants in accordance with Authority specifications.	No later than thirty (30) days prior to start of construction.
Submission – Final Art Budget. Developer shall submit a final Art Budget for the Phase I Improvements.	The date on which Developer has obtained all necessary permits required for the construction of the Phase I Improvements.
Submission – Final Construction Documents. Developer shall submit Final Construction Documents for the Phase I Improvements.	Thirty (30) days after the City's completion of plan check for the Phase I Improvements.
Review and Approval – Final Construction Documents. Authority shall review and approve the Final Construction Documents.	Within forty-five (45) days after receipt by Authority.
Commencement of Construction. The Commencement of Construction of the Phase I Improvements shall have occurred.	No later than February 15, 2013 (such date is subject to acceleration as provided in Article 5 of the letter agreement dated February 15, 2011 between Developer and Authority).
Completion of Construction. Developer shall submit certificate of substantial completion from Developer's Architect, with respect to the Phase I Improvements.	Within forty-five (45) months after the Commencement of Construction of the Phase I Improvements
Final Inspection. Authority shall conduct a final inspection of all improvements.	Within thirty (30) days after request by Developer, as applicable.
Issuance of Authority Certificate (or Partial	Within forty-five (45) days after receipt by

Certificate) of Completion. Authority shall issue in recordable form the Certificate of Completion (or Partial Certificate of Completion, as appropriate).	Authority of Developer's written request, provided all requirements for issuance have been satisfied.
Architect's Assignment. Developer shall execute and deliver the Architect's Assignment with respect to the Phase I Improvements to Authority and the County. Notwithstanding the foregoing, Developer shall not be in breach of its obligations hereunder if Developer is unable to comply with the provisions of this Paragraph due to Developer's contractual obligations with Gehry Partners and Frank Gehry.	Within forty-five (45) days after the issuance of the final Certificate of Occupancy by the City.

MUSEUM SCHEDULE OF PERFORMANCE	
Completion of Construction. Phase IIA Developer shall submit a certificate of substantial completion from Phase IIA Developer's Architect with respect to the Museum.	Within thirty-six (36) months after the Commencement of Construction of the Museum.
Final Inspection. Authority shall conduct a final inspection of the Museum.	Within forty-five (45) days after request by Phase IIA Developer.
Issuance of Authority Certificate of Completion. Authority shall issue in recordable form the Certificate of Completion with respect to the Museum.	Within forty-five (45) days after receipt by Authority of Phase IIA Developer's written request, provided all requirements for issuance have been satisfied.
Architect's Assignment. Phase IIA Developer shall execute and deliver the Architect's Assignment required by Section 405 of the Original DDA with respect to the Museum to Authority and the CRA. Notwithstanding the foregoing, Phase IIA Developer shall not be in breach of its obligations hereunder if Phase IIA Developer is unable to comply with the provisions of this	Within thirty (30) days after the issuance of the final Certificate of Occupancy for the Museum by the City of Los Angeles.

Paragraph due to Phase IIA Developer's contractual obligations with Phase IIA Developer's Architect.	

PLAZA AND PHASE IIA SCREETSCAPE SCHEDULE OF PERFORMANCE	
Submission – Schematic Design Drawings and Preliminary Landscape Plans. Phase IIA Developer shall prepare and submit to Authority its Schematic Design Drawings and Preliminary Landscape Plans for the Plaza and Grand Avenue Streetscape.	March 31, 2013.
Review and Approval – Schematic Design Drawings and Preliminary Landscape Plans. Authority, CRA and the County shall review and approve or disapprove the Schematic Design Drawings and Preliminary Landscape Plans as provided in Section 405 of the DDA.	Within thirty (30) days after receipt of the Schematic Design Drawings by Authority.
Submission – 80% Construction Documents and Final Landscape Plans. Phase IIA Developer shall submit 80% Construction Documents (80% complete set of plans and specifications sufficient for issuance of building permits) and Final Landscape Plans for the Plaza and Grand Avenue Streetscape.	September 30, 2013.
Review and Approval – 80% Construction Documents and Landscape Plans. Authority shall review and approve or disapprove the 80% Construction Documents and Landscape Plans as provided in Section 405 of the DDA. The parties acknowledge that Lessee may proceed with demolition, foundation and grading activities in accordance with City-issued permits, prior to the approval by Authority of 80% Construction Documents for the Plaza and Grand Avenue Streetscape.	Within thirty (30) days after receipt by Authority.

Submission – Final Construction Documents. Phase IIA Developer shall submit Final Construction Documents for the Plaza and Grand Avenue Streetscape.	November 30, 2013.
Review and Approval – Final Construction Documents. Authority shall review and approve or disapprove the Final Construction Documents.	Within thirty (30) days after receipt by Authority.
Submission - Proposed Construction Budget. Phase IIA Developer shall provide Authority with a proposed construction budget pursuant to Section 408(2) of the DDA with respect to the Plaza and Grand Avenue Streetscape.	Within thirty (30) days after Authority approval of Final Construction Documents for the Plaza and Grand Avenue Streetscape.
Review and Approval - Final Construction Budget. Authority shall approve or disapprove, as set forth in Section 408(2), the proposed construction budget for the Plaza and Grand Avenue Streetscape, which shall then become the Plaza and Grand Avenue Streetscape Final Construction Budget.	Within thirty (30) days after receipt by Authority.
Commencement of Construction of Plaza Foundation. The Commencement of Construction of the Plaza foundation shall have occurred.	Commenced
Commencement of Construction of Plaza Deck. The Commencement of Construction of the Plaza deck and Grand Avenue Streetscape shall have occurred.	March 31, 2014.
Completion of Construction. Phase IIA Developer shall submit a certificate of substantial completion from Phase IIA Developer's Architect with respect to the Plaza foundation, deck and improvements and the Grand Avenue Streetscape.	August 31, 2014.
Final Inspection. Authority shall conduct a final inspection of the Plaza and Grand Avenue Streetscape.	Within forty-five (45) days after request by Phase IIA Developer.
Issuance of Authority Certificate of Completion. Authority shall issue in	Within forty-five (45) days after receipt by Authority of Phase IIA Developer's written

recordable form the Certificate of Completion with respect to the Plaza and Grand Avenue Streetscape.	request, provided all requirements for issuance have been satisfied.
Architect's Assignment. Phase IIA Developer shall execute and deliver the Architect's Assignment required by Section 405 of the DDA with respect to the Plaza and Grand Avenue Streetscape to Authority and the CRA. Notwithstanding the foregoing, Phase IIA Developer shall not be in breach of its obligations hereunder if Phase IIA Developer is unable to comply with the provisions of this Paragraph due to Phase IIA Developer's contractual obligations with Phase IIA Developer's Architect.	Within thirty (30) days after the issuance of the final Certificate of Occupancy for the Plaza and Grand Avenue Streetscape by the City of Los Angeles.

PHASE IIB IMPROVEMENTS :	
Notice. Phase IIB Developer shall provide written notice to Authority of the date upon which the Commencement of Construction of the Phase IIB Improvements shall occur.	At least two (2) weeks prior to Commencement of Construction of the Phase IIB Improvements.
Commencement of Construction. The Commencement of Construction of the Phase IIB Improvements shall have occurred.	December 26, 2012 ("**Phase IIB Outside Construction Start Date**").
Completion of Construction. Phase IIB Developer shall submit a certificate of substantial completion from Phase IIB Developer's architect with respect to the Phase IIB Improvements.	Within thirty (30) months of Commencement of Construction of the Phase IIB Improvements; but in no event later than March 31, 2015.
Final Inspection. Authority shall conduct a final inspection of all Phase IIB Improvements.	Within thirty (30) days after request by Phase IIB Developer, as applicable.
Issuance of Authority Certificate of Completion. Authority shall issue in	Within thirty (30) days after receipt by Authority of Phase IIB Developer's written

recordable form the Certificate of Completion for the Phase IIB Improvements.	request, provided all requirements for issuance have been satisfied.
Architect's Assignment. Phase IIB Developer shall execute and deliver the Architect's Assignment with respect to the Phase IIB Improvements to the Authority and the CRA. Notwithstanding the foregoing, Phase IIB Developer shall not be in breach of its obligations hereunder if Phase IIB Developer is unable to comply with the provisions of this Paragraph due to Phase IIB Developer's contractual obligations with Phase IIB Developer's architect for Phase IIB.	Within thirty (30) days after the issuance of the final Certificate of Occupancy by the City of Los Angeles.
PHASE IIC IMPROVEMENTS:	
Submission – Schematic Design Drawings. Developer shall prepare and submit to Authority its Schematic Design Drawings for the Phase IIC Improvements.	At least fifteen (15) months prior to the Phase IIC Outside Construction Start Date.
Review and Approval – Schematic Design Drawings. Authority, CRA and the County shall review and approve the Schematic Design Drawings as provided in Section 405 of the DDA.	Within forty-five (45) days after receipt of the Schematic Design Drawings by Authority.
Submission – Design Development Drawings and Preliminary Landscape Plans. Developer shall prepare and submit to Authority Design Development Drawings and Preliminary Landscape Plans for the Phase IIC Improvements.	Within one hundred twenty (120) days after receipt of Authority approval of the Schematic Design Drawings.
Review and Approval- Design Development Drawings. Authority shall review and approve the Design Development Drawings and Preliminary Landscape Plans as provided in Section 405 of the DDA.	Within fifteen (15) days after receipt of the submission by Authority.
Submission – 80% Construction Documents and Final Landscape Plans. Developer shall submit 80% Construction Documents (80%	Within one hundred fifteen (115) days after Developer's submittal of Design Development Drawings for the relevant

complete set of plans and specifications sufficient for issuance of building permits) and Final Landscape Plans for the Phase IIC Improvements.	improvements.
Review and Approval – 80% Construction Documents and Landscape Plans. Authority shall review and approve the 80% Construction Documents and Landscape Plans as provided in Section 405 of the DDA. The parties acknowledge that Developer may proceed with demolition, foundation and grading activities in accordance with City-issued permits, prior to the approval by Authority of 80% Construction Documents for the Phase IIC Improvements.	Within fifteen (15) days after receipt by Authority.
Orientation. Developer shall coordinate a preconstruction orientation meeting with Developer's general contractors and Authority.	Prior to commencement of grading activities in connection with the Phase IIC Improvements.
Submission – Final Construction Documents. Developer shall submit Final Construction Documents for the Phase IIC Improvements.	Within one hundred fifteen (115) days after Developer's submittal of the 80% Construction Documents for the Phase IIC Improvements.
Review and Approval – Final Construction Documents. Authority shall review and approve the Final Construction Documents.	Within fifteen (15) days after receipt by Authority.
Submission - Proposed Construction Budget. Developer shall provide Authority with a proposed construction budget pursuant to Section 408(2) with respect to the Phase IIC Improvements.	Within fifteen (15) days after Authority approval of Final Construction Documents for the Phase IIC Improvements.
Review and Approval - Final Construction Budget. Authority shall approve or disapprove, as set forth in Section 408(2), the proposed construction budget for the Phase IIC Improvements, which shall then become the Final Construction Budget for such Improvements.	Within fifteen (15) days after receipt by Authority.

Commencement of Construction. The Commencement of Construction of the Phase IIC Improvements shall have occurred.	Within eighteen (18) months after the issuance of a certificate of substantial completion for the Phase IIB Improvements, but in no event later than October 1, 2016 (**"Phase IIC Outside Construction Start Date"**).
Completion of Construction. Developer shall submit a certificate of substantial completion from Developer's architect with respect to the Phase IIC Improvements.	Within thirty (30) months after the Commencement of Construction of the Phase IIC Improvements, but in no event later than March 31, 2019.
Final Inspection. Authority shall conduct a final inspection of all improvements.	Within thirty (30) days after request by Developer, as applicable.
Issuance of Authority Certificate of Completion. Authority shall issue in recordable form the Certificate of Completion for the Phase IIC Improvements.	Within thirty (30) days after receipt by Authority of Developer's written request, provided all requirements for issuance have been satisfied.
Architect's Assignment. Developer shall execute and deliver the Architect's Assignment with respect to the Phase IIC Improvements to the Authority and the CRA. Notwithstanding the foregoing, Developer shall not be in breach of its obligations hereunder if Developer is unable to comply with the provisions of this Paragraph due to Developer's contractual obligations with Developer's architect for Phase IIC.	Within thirty (30) days after the issuance of the final Certificate of Occupancy by the City of Los Angeles.
PHASE III IMPROVEMENTS:	
Submission – Schematic Design Drawings. Developer shall prepare and submit to Authority its Schematic Design Drawings for the Phase III Improvements.	At least fifteen (15) months prior to the Phase III Outside Construction Start Date.
Review and Approval – Schematic Design Drawings. Authority, CRA and the County shall review and approve the Schematic Design Drawings as provided in Section 405 of the DDA.	Within forty-five (45) days after receipt of the Schematic Design Drawings by Authority.

Submission – Design Development Drawings and Preliminary Landscape Plans. Developer shall prepare and submit to Authority Design Development Drawings and Preliminary Landscape Plans for the Phase III Improvements.	Within one hundred twenty (120) days after receipt of Authority approval of the Schematic Design Drawings.
Review and Approval- Design Development Drawings. Authority shall review and approve the Design Development Drawings and Preliminary Landscape Plans as provided in Section 405 of the DDA.	Within fifteen (15) days after receipt of the submission by Authority.
Submission – 80% Construction Documents and Final Landscape Plans. Developer shall submit 80% Construction Documents (80% complete set of plans and specifications sufficient for issuance of building permits) and Final Landscape Plans for the Phase III Improvements.	Within one hundred fifteen (115) days after Developer's submittal of Design Development Drawings for the relevant improvements.
Review and Approval – 80% Construction Documents and Landscape Plans. Authority shall review and approve the 80% Construction Documents and Landscape Plans as provided in Section 405 of the DDA. The parties acknowledge that Developer may proceed with demolition, foundation and grading activities in accordance with City-issued permits, prior to the approval by Authority of 80% Construction Documents for the Phase III Improvements.	Within fifteen (15) days after receipt by Authority.
Orientation. Developer shall coordinate a preconstruction orientation meeting with Developer's general contractors and Authority.	Prior to commencement of grading activities in connection with the Phase III Improvements.
Submission – Final Art Budget. Developer shall submit a final Art Budget for the Phase III Improvements.	The date on which Developer has obtained all necessary permits required for the construction of the Phase III Improvements.
Submission – Final Construction Documents. Developer shall submit Final Construction	Within one hundred fifteen (115) days after Developer's submittal of the 80%

Documents for the Phase III Improvements.	Construction Documents for the Phase II Improvements.
Review and Approval – Final Construction Documents. Authority shall review and approve the Final Construction Documents.	Within fifteen (15) days after receipt by Authority.
Submission - Proposed Construction Budget. Developer shall provide Authority with a proposed construction budget pursuant to Section 408(3) with respect to the Phase III Improvements.	Within fifteen (15) days after Authority approval of Final Construction Documents for the Phase III Improvements.
Review and Approval - Final Construction Budget. Authority shall approve or disapprove, as set forth in Section 408(3), the proposed construction budget for the Phase III Improvements, which shall then become the Final Construction Budget for such Improvements.	Within fifteen (15) days after receipt by Authority.
Commencement of Construction. The Commencement of Construction of the Phase III Improvements shall have occurred.	Within eighteen (18) months after the issuance of a certificate of substantial completion for the Phase IIB Improvements, but in no event later than October 1, 2016 (**"Phase III Outside Construction Start Date"**).
Completion of Construction. Developer shall submit a certificate of substantial completion from Developer's architect with respect to the Phase III Improvements.	Within thirty (30) months after the Commencement of Construction of the Phase III Improvements, but in no event later than March 31, 2019.
Final Inspection. Authority shall conduct a final inspection of all improvements.	Within thirty (30) days after request by Developer, as applicable.
Issuance of Authority Certificate (or Partial Certificate) of Completion. Authority shall issue in recordable form the Certificate of Completion (or Partial Certificate of Completion, as appropriate).	Within thirty (30) days after receipt by Authority of Developer's written request, provided all requirements for issuance have been satisfied.
Architect's Assignment. Developer shall execute and deliver the Architect's Assignment with respect to the Phase III Improvements to the Authority and the County.	Within thirty (30) days after the issuance of the final Certificate of Occupancy by the City of Los Angeles.

Notwithstanding the foregoing, Developer shall not be in breach of its obligations hereunder if Developer is unable to comply with the provisions of this Paragraph due to Developer's contractual obligations with Developer's architect.	

EXHIBIT E

PHASE IIB DEVELOPER'S ENVIRONMENTAL COMPLIANCE OBLIGATIONS

Mitigation Measures, Regulatory Measures, Project Design Features and Conditions of Approval Applicable to Phase IIB – Parcel M

EIR Section	MM #	Applicability	
Land Use	A-1	NA	Applies to Civic Park Only: Pre Construction Bird Surveys
Traffic			
Construction	B-1	Applies	Construction Traffic Control/Management Plan
Construction	B-2	Applies	Provide CTC/MP to City/County
Construction	B-3	Applies	Temporary parking for Construction Workers
Operation	B-4	NA	Applies to County Office Building Only: Develop TDM Plan
Operation	B-5	NA	Applies to Phase 1 Parcel Q Only: Area-Wide ATCS per DOT 4/2/12 ltr
Operation	B-6	Applies	Menu for LADOT: Walking conn, enhanced bus stops, transit info kiosks, Flex-car, signage
Operation	B-7	NA	Applies to Phase 1 Parcel Q only: 3rd/Hill intersection Improvements per DOT 4/2/12 ltr
Aesthetics			
Construction	C-1	Applies	Daily visual inspection for unauthorized materials
Construction	Reg C-1	Applies	Tree Replacement Plan
Construction	PDF C-1	NA	Applies to Civic Park and Streetscape Program Only: Coord with Park Improvements
Construction	PDF C-2	Applies	Coord sidewalk construction with development
Operation	C-2	Applies	Design Plan for glare
Operation	C-3	Applies	Architectural lighting plan
Operation	Reg C-3	Applies	Lighting Plan
Operation	Reg C-4	Applies	Mech Equip Plan
Operation	Reg C-5	Applies	Underground Utility Plan
Operation	Reg C-6	Applies	Trash Collection area Plan
Operation	PDF C-3	Applies	Ground level building fixture plan
Historic			
D-1 through D-12		NA	Applies to Civic Center buildings/Civic Park & Streetscape Program only: Impacts to historic building
Pop/Housing	None		
Air Quality			
Construction	F-1	Applies	SCAQMD Rule 403 Fugitive Dust Plan

Construction	F-2	Applies	Coatings & Solvents
Construction	F-3	Applies	SCAQMD Rule 402 Nuisance Odor Plan
Construction	F-4	Applies	Truck wheel washing
Construction	F-5	Applies	Haul truck covering
Construction	F-6	Applies	Construction equipment tuning
Construction	F-7	Applies	Construction equipment maintenance
Construction	F-8	Applies	Electric powered equipment
Construction	F-9	Applies	10 minute idling limit
Construction	F-10	Applies	Alternative clean fuels
Construction	F-11	Applies	Shuttle service for off site parking
Construction	F-12	Applies	Particulate filters and catalytic converters
Operation	F-13	Applies	Off-peak deliveries
Operation	F-14	Applies	Transit information
Operation	F-15	Applies	Bicycle racks
Operation	F-16	Applies	Automatic lighting shutoffs
Operation	PDF F-1	Applies	Bus stop pedestrian access plan
Operation	PDF F-2	Applies	Pedestrian acccess plan
Operation	Reg F-1	Applies	Point source permits from SCAQMD
Operation	PDF F-3	Applies	TAC/odor limitation
Operation	Reg F-2	Applies	Title 24 compliance required
Operation	Reg F-3	Applies	SCAQMD compliance for building matls, coatings, solvents
Noise			
Construction	G-1	Applies	Construction hours
Construction	G-2	Applies	Heavy equipment within 100 feet of County Courthouse
Construction	G-3	Applies	Plywood noise barrier
Construction	G-4	Applies	Pile drivers reduced 10 dBA
Construction	G-5	Applies	Construction staging areas
Construction	G-6	Applies	Route pedestrians 50 feet when hydraulic excavators in use
Construction	G-7	Applies	Construction relations officer
Construction	G-8	Applies	Applies to residential development only: Double pane windows for residential units
Hazardous Materials			
Construction	Reg H-1	Applies	Decommission Groundwater Monitoring Wells

Construction	Reg H-2	Applies	Hydrogen Sulfide/Methane Testing
Construction	Reg H-3	Applies	Contamination testing
Construction	Reg H-4	NA	Applies to Streetscape Improvements only: Hazardous Conditions for Street Scape Improvements
Construction	Reg H-5	NA	Only applies if building demolition involved: Asbestos survey
Construction	Reg H-6	NA	Only applies if building demolition involved: Lead Based Paint Survey
Fire			
Construction	Reg I.1-1	NA	Only applies if building demolition involved: Fire access during demolition
Construction	Reg I.1-2	Applies	Access to Adjacent Underground Parking Structures
Construction	Reg I.1-3	Applies	Access to Adjacent Buildings
Construction	Reg I.1-4	Applies	Interference with Adjacent Building Evacuation Plans
Construction	Reg I.1-5	Applies	Fire Hydrants During Construction
Construction	Reg I.1-6	Applies	Compliance with Fire Codes
Operations	Reg I.1-7	Applies	Maintenance of Fire Access
Operations	Reg I.1-8	Applies	Fire Plan Check
Operations	Reg I.1-9	NA	Applies only to Civic Park: County Fire Plan Check for Civic Park
Operations	Reg I.1-10	Applies	Operational Fire hydrants prior to construction
Operations	Reg I.1-11	Applies	Fire lanes and turning areas
Operations	Reg I.1-12	Applies	Fire Flow and Hydrant Plan
Operations	Reg I.1-13	Applies	Emergency access during Construction
Operations	Reg I.1-14	Applies	Fire lanes 20 feet and clear to sky
Operations	Reg I.1-15	Applies	Fire lane cul de sacs
Operations	Reg I.1-16	Applies	No development greater than 150 feet from street, access or fire lane
Operations	Reg I.1-17	Applies	28 foot fire lanes
Operations	Reg I.1-18	Applies	Residential Access
Operations	Reg I.1-19	Applies	Residential Entrances and Exits
Operations	Reg I.1-20	Applies	Minimum Outside Radius
Operations	Reg I.1-21	Applies	No development greater than 150 feet from street, access or fire lane
Operations	Reg I.1-22	Applies	Overhead clearance 14 feet
Operations	Reg I.1-23	Applies	Additional vehicular access for buildings over 28 feet in height
Operations	Reg I.1-24	Applies	Bearing pressure 8,600 lbs per sf
Operations	Reg I.1-25	Applies	Private Streets and Fire Lanes
Operations	Reg I.1-26	Applies	Electric gates
Operations	Reg I.1-27	Applies	No part of building more than 300 feet from fire hydrant

Operations	Reg I.1-28	Applies	Rescue window access
Operations	Reg I.1-29	Applies	Red curbs and no parking signs for fire lanes
Operations	Reg I.1-30	NA	Applies only to Civic Park: Large events at Civic Park
Construction	PDF I.1-1	Applies	Automatic fire sprinklers
Police			
Construction	Reg I.2-1	Applies	Unobstructed LAPD acess during construction
Construction	Reg I.2-2	Applies	Construction site security
Construction	Reg I.2-3	Applies	Plot plans review by LAPD
Construction	Reg I.2-4	NA	Applies only to Civic Park: Plot plan review for Civic Park
Operations	Reg I.2-5	Applies	Submit as-built plans to LAPD Central Area
Operations	Reg I.2-6	Applies	Alarms/locked gates on commercial doorways
Operations	Reg I.2-7	Applies	Security landscaping
Operations	Reg I.2-8	Applies	Lighting consultation with LAPD
Construction	Reg I.2-9	Applies	Pedestrian safety plan
Operations	Reg I.2-10	Applies	Security Plan for operations
Operations	Reg I.2-11	Applies	Emergency Procedures Plan
Schools			
Construction	Reg I.3-1	Applies	School fees
Parks			
Construction	Reg I.4-1	Applies	Compliance with Quimby provisions of LAMC
Library			
None			
Water			
Operation	J.1-1	NA	Applies only to Parcels L and W
Construction	Reg J.1-1	Applies	DIG-ALERT
Construction	Reg J.1-2	Applies	Potholing of existing water and gas mains to verify depth of cover
Construction	Reg J.1-3	Applies	Pay appropriate fees
Construction	Reg J.1-4	Applies	Fire flow test
Operations	Reg J.1-5	Applies	Phase I of City Emergency Water Conserv plan

Operations	Reg J.1-6	NA	LA County water conservation policies for Civic Park and County Office
Operations	Reg J.1-7	Applies	Comply with Mandatory water use restrictions
Operations	Reg J.1-8	Applies	Automatic irrigation systems
Wastewater			
Construction	Reg J.2-1	Applies	Comply with sewer connection limitations
Construction	Reg J.2-2	Applies	Low flow fixtures
Solid Waste			
Construction	Reg J.3-1	Applies	Comply with Ordinance 171,687 (Recycling)
Construction	Reg J.3-2	Applies	Recycling bins plan
Construction	Reg J.3-3	Applies	Mechanized collection of recyclables
Operations	Reg J.3-4	Applies	Maintain recycling facilities
Construction	Reg J.3-5	Applies	Construction and demolition debris recycling plan
Conditions of Approval			
Construction	1	Applies	Coordinate with Music Center
Construction	2	Applies	Coordinate with Superior Court
Construction	3	Applies	Coordinate with Colburn School
Construction	4	Applies	Standard construction shift 7am-3:30pm
Construction	5	Applies	Transit passes for construction workers

Key
Reg - Regulatory
PDF - Project Design Feature
NA - Not Applicable

Mitigation Measures, Regulatory Measures, Project Design Features and Conditions of Approval Applicable to Phase IIB – Parcel M

(Measures in strikethrough inapplicable to Parcel M)

1. Land Use

~~**Regulatory Measure A-1:** Project construction involving of on-site clearance of vegetation, excavation, or other construction activities shall avoid, to the extent feasible, from occurring between March 1 and August 31 (and between February 1 and August 31 for raptors). Prior to the completion of final plans and specifications for the Civic Park, the County Chief Administrative Officer (CAO) or designee shall review the plans and specifications to ensure that the contractor is apprised of the requirements of the Migratory Bird Treaty Act (MBTA) and encouraged to schedule removal or relocation of mature trees and removal of other potential nesting habitat outside of the breeding season. In the event that the identified construction activities must occur within the specified time period, a qualified biologist acceptable to the County Chief Administrative Officer shall complete weekly surveys within the Civic Park site that is subject to disturbance, and within 500 feet of the boundary of such areas, to determine if any protected native birds are present. The surveys shall continue on a weekly basis with the last survey being conducted no more than three days prior to the initiation of clearance/construction work. If an active nest is located within trees or other habitat scheduled for removal or relocation, or within 300 feet of the construction area, construction shall be suspended within 300 feet of the nest (500 feet for raptor nests) until such time a qualified biologist determines if construction activities are interfering with nesting activities. If construction activities are determined to not interfere with nesting activities, construction may continue with a biological monitor present. Should a tree or other habitat scheduled for removal or relocation be determined to contain an active nest, removal or relocation shall be delayed until the nest is determined to be inactive or a permit is granted by the USFWS for take pursuant to the MBTA. The distance limits of construction to avoid a nest shall be identified in the field with flagging and stakes or construction fencing. Construction personnel shall be instructed on the sensitivity of the area. The County CAO or designee shall record the results of the protective measure above.~~

1. Traffic

Mitigation Measure B-1: The Developer with regard to the five development parcels, and the responsible parties for implementation of the Civic Park and Streetscape Program under the applicable agreements, shall prepare, prior to the start of each construction work phase, a Construction Traffic Control/Management Plan to be approved by the LADOT and implemented by the responsible party. The Plan shall include, but not be limited to, Project scheduling, the location and timing of any temporary lane closures, traffic detours, haul routes, temporary roadway striping, and signage for traffic flow, as necessary, as well as the identification and signage of alternative pedestrian routes in the immediate

vicinity of the Project, if necessary. The Plan should also provide for the coordination of construction areas, and for safe pedestrian movement throughout the Project Area such that adequate and safe pedestrian movement access is maintained to adjacent uses including the Walt Disney Concert Hall, the Music Center, the County Courthouse, and the Metro Red Line station portals (on Parcel W-2 and on the Court of Flags).

Mitigation Measure B-2: After approval of the Construction Traffic Control/Management Plan(s) required under Mitigation Measure B-1 and prior to the start of each construction work phase, the Developer with regard to the five development parcels, and the responsible parties for implementation of the Civic Park and Streetscape Program under the applicable agreements, shall submit a copy of the Plan(s) to the Authority or other appropriate agency, and/or the City Chief Administrative Officer or designee and the County of Los Angeles Chief Administrative Officer. Following receipt of the Plan(s), the County of Los Angeles Chief Administrative Officer or designee shall distribute that information to all County properties on Grand Avenue, including the Hall of Administration, County Courthouse, the Walt Disney Concert Hall, and the Music Center, for further distribution of information to employees and visitors on construction schedules, alternative travel routes, and lane and sidewalk closure information, as appropriate, and the Authority or other appropriate agency, or the City, shall distribute to the appropriate City departments for the same purposes.

Mitigation Measure B-3: Prior to the start of each construction phase, the Developer, with regard Civic Park and Streetscape Program under the applicable agreements, shall enter into one or more temporary arrangements with parking garages in the area of the Project, or with surface lot operators elsewhere in downtown or its periphery, to provide a sufficient supply of off-street spaces for the construction workers during Project construction, and will require all construction workers to use these designated parking spaces. These temporary arrangements shall be to the satisfaction of the CRA/LA and County's CAO or its designee.

~~**Mitigation Measure B-4:** If the Project proceeds with the County office building option, the County, on an on-going basis following initial occupancy, shall fund and implement a Transportation Demand Management (TDM) program for the proposed County office use in Parcel W-1/W-2. The County's Chief Administrative Officer shall ensure the County's review and approval of this TDM program. The TDM program could, for example, include an onsite transportation coordinator, post information on transit, provide logistical support for the formation of carpools and vanpools, and other incentives to use transit and rideshare.~~

~~**Mitigation Measure B-5:** The Developer, with regard to the five development parcels, shall implement ATCS in conjunction with the area-wide ATCS program, if not otherwise implemented, prior to the completion of the first phase of development at the intersections identified by LADOT, although the implementation of this measure will provide mitigation to all three Project phases. Implementation of ATCS shall occur in the northern part of downtown, north of Eighth Street, at the locations identified by LADOT. LADOT has determined that implementation of the ATCS mitigation improvements in the area~~

~~surrounding the Project would comprise the following: (1) upgrades to Model 2070 traffic signal controllers at 35 intersections; (2) installation of 58 ATSAC/ATCS system vehicle detectors at 9 intersections; and (3) installation of CCTV cameras to provide video information to the ATSAC Center at eight locations. Subject to a final determination by LADOT of the improvements required for the Project, ATCS shall also include LADOT's Transit Priority System (TPS).~~

Mitigation Measure B-6: The following menu of mitigation measures has been developed to further reduce the Project's potential traffic and circulation impacts. The term, "menu," refers to the various ways that each of the following measures can be implemented to achieve trip reduction. Selection shall be coordinated with LADOT who shall determine which of these mitigation measures are to be implemented.

- Provide enhanced walking connections along the Project street frontages to transit service (to bus stops and to the Red Line station portals at First Street and Hill Street, and at Hill Street mid-block between First Street and Temple Street). These could comprise pedestrian amenities along the Project's street frontages, including landscaped sidewalks, wider crosswalks where feasible at key intersections, improved lighting for pedestrian safety at nighttime, and pedestrian wayfinding signage, to facilitate walking in the Project area. The Developer shall implement this measure with regard to the five development parcels prior to initial building occupancy for each development phase; while, the responsible parties for the implementation of the Civic Park and Streetscape Program, under the applicable agreements, shall implement these measures prior to the completion of construction for each of these Project components.

- The Developer, as determined by LADOT and prior to initial building occupancy for each development phase, shall provide enhanced bus stops on the street frontages of the five development parcels. These enhanced bus stops may include bus shelters with passenger amenities such as benches, shaded areas, and transit information, that could be integrated into the overall urban design/landscaping of the Project.

- Provide transit information kiosks at various strategic locations on the Project site. The Developer shall implement this measure with regard to the five development parcels prior to initial building occupancy for each development phase; while, the responsible parties for the implementation of the Civic Park and Streetscape Program, under the applicable agreements, shall implement these measures prior to the completion of construction for each of those Project components.

- The Developer, with regard to the five development parcels, shall participate to the extent feasible in an on-going basis during Project operations, in a Share-Car program (e.g., Flexcar) that makes cars available to registered members. It is

anticipated that up to three on-street parking spaces, subject to a determination of feasibility by LADOT, could be provided at key locations adjacent to the Project frontage for up to three Share-Cars. The Share-Cars could be available to both Project and non-Project users as long as they were members of the Share-Car program. The Project shall support any Share-Car organization's application to the City, and following any implementation of such application, shall promote the Share-Car concept and encourage its usage with Project residents and tenants.

- Provide improved vehicular directional signage on surface streets approaching and within the Project area to direct vehicles to specific destinations and parking locations, as appropriate, to minimize vehicles circulating in the Project area. Such signage should be approved to the satisfaction of LADOT. The Developer shall implement this measure with regard to the five development parcels prior to initial building occupancy for each development phase; while, the responsible parties for the implementation of the Civic Park under the applicable agreements, shall implement these measures prior to the completion of construction for the Civic Park.

~~**Mitigation Measure B-7:** The Developer, with regard to the five development parcels, shall re-stripe the westbound approach of the Third Street and Hill Street intersection from the existing configuration of one left turn lane, one through lane, and one shared through/right turn lane to a future configuration of one left turn lane, two through lanes, and one exclusive right turn lane. This improvement would require a slight widening of Third Street west of Hill Street before the entrance to the tunnel within the public right-of-way. The final lane configuration of this intersection shall be to the satisfaction of the City of Los Angeles Department of Transportation. In addition, any street widening and construction activities shall be coordinated with the City of Los Angeles Department of Public Works, Bureau of Engineering.~~

2. Aesthetics

Mitigation Measure C-1: During Project construction, the Developer, with regard to the five development parcels, and the responsible parties for implementation of the Civic Park and Streetscape Program under the applicable agreements, shall ensure, through appropriate postings and daily visual inspections, that no unauthorized materials remain posted on any temporary construction barriers or temporary pedestrian walkways, and that any such temporary barriers and walkways are maintained in a visually attractive manner throughout the construction period. The City's Department of Building and Safety or other appropriate City agency or department, shall determine compliance with this measure with regard to construction associated with the five development parcels and the Streetscape Program. The County's CAO or its designee shall determine compliance with this measure with regard to construction of the Civic Park.

Regulatory Measure C-1: Prior to the start of each construction work phase, the Developer, with regard to the five development parcels, and the responsible parties for implementation of the Streetscape Program under the applicable agreements, shall prepare and implement a tree replacement plan should

mature trees along Grand Avenue be impacted by Project construction. Existing mature trees shall be replaced at a ratio of not less than 1:1, to the extent consistent with the final streetscape design. The City's Department of Building and Safety or other appropriate City agency or department, shall determine compliance with this measure with regard to the five development parcels and the Streetscape Program.

~~**Project Design Feature C-1:** Prior to the start of construction along the east side of Grand Avenue, between First and Temple Streets, the responsible parties for implementation of the Civic Park and Streetscape Program under the applicable agreements shall coordinate construction of park improvements in the westerly Civic Park sector with any installation of streetscape and other improvements on Grand Avenue between First and Temple Streets to reduce the duration and visual impact of construction activities. Scheduling of construction activities for the Civic Park and the Streetscape Program shall be reviewed and approved by the Authority and shall be implemented by the responsible parties.~~

Project Design Feature C-2: Prior to the start of each construction work phase, the Developer, with regard to the five development parcels, and the responsible parties for implementation of the Civic Park and Streetscape Program under the applicable agreements, shall schedule and coordinate sidewalk construction with the development of the adjacent parcels to reduce the duration and visual impact of construction activities. Scheduling of construction activities for the five development parcels, the Civic Park and the Streetscape Program shall be reviewed and approved by the Authority and implemented by the responsible parties.

Mitigation Measure C-2: Prior to the start of each construction work phase, the Developer, with regard to the five development parcels, shall submit a design plan and technical analysis, prepared by the Project's architect, as part of the building permit submission, that demonstrates that the final selection of building materials for the five development parcels shall not create a significant glare impact on any offsite sensitive uses, including line-of-sight glare on any street or commercial, residential, or cultural use. The approved design plan shall be implemented by the Developer with regard to the five development parcels. The design plan and technical study shall be reviewed and approved by the Authority.

Mitigation Measure C-3: Prior to each construction phase, the Developer with regard to the five development parcels, shall prepare and, thereafter, implement plans and specifications to ensure that architectural lighting is directed onto the building surfaces and has low reflectivity in accordance with Illuminating Engineers Society (IES) standards to minimize glare and limit light onto adjacent properties.

Regulatory Measure C-3: Prior to the completion of final plans and specifications, the responsible parties for implementation of the Civic Park and Streetscape Program under the applicable agreements, shall prepare lighting plans and specifications for the design type of light fixtures, height of light standards, and orientation of light fixtures and standards within the public right-of-way to ensure that all light fixtures do not interfere with the activities occurring within these areas. Lighting plans with regard to the Streetscape Program shall be submitted to the City's Department of Building and Safety or other

appropriate City agency or department, for review and approval. Lighting plans with regard to the Civic Park shall be submitted to the County of Los Angeles CAO or its designee for review and approval. Approved lighting plans shall be implemented by the responsible parties.

Regulatory Measure C-4: Prior to the start of each construction work phase, the Developer, with regard to the five development parcels, and the responsible parties for implementation of the Civic Park under the applicable agreements shall submit to the Authority for review and approval, building plans and specifications that demonstrate that all ventilation, heating and air conditioning ducts, tubes, and other such mechanical equipment shall be screened from the line-of-sight from the street. Approved building plans and specifications shall be implemented by the responsible parties.

Regulatory Measure C-5: Prior to the start of each construction work phase, the Developer, with regard to the five development parcels, and the responsible parties for implementation of the Civic Park and Streetscape Program under the applicable agreements shall submit design plans that demonstrate that all utility lines and connections are constructed underground. Approved utility plans and connections with regard to the five development parcels shall be reviewed and approved by the Authority, whereas the City's Department of Building and Safety or other appropriate City agency or department, shall review and approve with regard to the Streetscape program. Approved utility lines and connections shall be implemented by the responsible parties.

Regulatory Measure C-6: Prior to construction, the Developer, with regard to the five development parcels, shall submit design plans for trash collection areas to the Authority for review and approval. Trash collection areas shall be screened from line of sight from the street. Approved design plans shall be implemented by the Developer.

Project Design Feature C-3: Prior to the start of each construction work phase, the Developer, with regard to the five development parcels, and the responsible parties for implementation of the Civic Park and Streetscape Program under the applicable agreements, shall prepare architectural plans that shall be reviewed and approved by the Authority such that all ground-level building fixtures, including, but not limited to, security gates, landscape light fixtures, pedestrian lights, air intake shafts, and other appurtenances are integrated into the architectural theme and/or design of the respective Project components. Approved architectural plans shall be implemented by the Developer and the responsible parties.

4. Historical Resources

~~**Mitigation Measure D-1:** Potential Los Angeles Civic Center Historic District. Prior to the start of each construction phase, the responsible parties for implementation of the Streetscape Program under the applicable agreements shall submit plans to the Authority, for review and approval to ensure that impacts to the potential eligibility of the potential Los Angeles Civic Center Historic District are reduced to the maximum extent practicable through implementation of the following measures:~~

~~Grand Avenue Streetscape Program Design Features. If the Streetscape Program is implemented in substantial conformance to that set forth in the Project's Conceptual Plan, then the following mitigation measure is not required since such Plan is consistent with the Secretary of Interior's Standards for Rehabilitation of Historic Buildings and the Guidelines for the Treatment of Cultural Landscapes (collectively referred to as the "Standards"). However, should the final design for the Grand Avenue streetscape improvements not be implemented in substantial conformance with the Project's Conceptual Plan, then the landscape and hardscape features proposed as part of the Grand Avenue Streetscape Program shall respect the linear qualities of the street and sidewalks in respect to the adjacent historic resource. Such landscape treatments shall be unified and planted in a manner as to not obscure the sight lines to the facades of those properties identified as contributors to the potential Los Angeles Civic Center Historic District from the public right of ways. The design of the Project's streetscape improvements shall consider their height, width, and spatial placement and include a program of selective pruning of trees to retain sight lines on a regular basis.~~

~~**Mitigation Measure D 2:** Music Center. No mitigation measures are required if the Grand Avenue streetscape improvements are implemented in substantial conformance to that set forth in the Project's Conceptual Plan, as determined by the Authority, since such Plan is consistent with the Secretary of Interior's Standards of Rehabilitation of Historic Buildings and the Guidelines for the Treatment of Cultural Landscapes (collectively referred to as the "Standards"). However, should the final design for the Grand Avenue streetscape improvements not be implemented in substantial conformance with the Project's Conceptual Plan, then prior to the start of each construction phase, the entity responsible for implementing the Project's streetscape program under the applicable agreements shall submit plans to the Authority for review and approval to ensure that impacts to the potential eligibility of the Music Center are reduced to the maximum extent practicable through implementation of the following mitigation measure:~~

~~Prior to implementation, the final design plans for the Grand Avenue streetscape improvements shall be reviewed by a qualified architectural historian or historic preservation consultant who satisfies the Secretary of the Interior's Professional Qualification Standards for History or Architectural History to assure that the final design for the streetscape improvements does not materially alter the Music Center's potential historic significance. This evaluation shall be conducted in accordance with the Secretary of the Interior's Standards.~~

~~**Mitigation Measure D 3:** Cathedral of Our Lady of the Angels. No mitigation measures are required if the Grand Avenue streetscape improvements are implemented in substantial conformance to that set forth in the Project's Conceptual Plan, as determined by the Authority, since such Plan is consistent with the Secretary of Interior's Standards of Rehabilitation of Historic Buildings and the Guidelines for the Treatment of Cultural Landscapes (collectively referred to as the "Standards"). However, should the final design for the Grand Avenue streetscape improvements not be implemented in substantial conformance with the Project's Conceptual Plan, then prior to the start of each construction phase, the entity responsible for implementing the Project's streetscape program under the applicable agreements shall~~

~~submit plans to the Authority, for review and approval to ensure that impacts to the potential eligibility of the Cathedral of Our Lady of the Angels are reduced to the maximum extent practicable through implementation of the following mitigation measure:~~

~~Prior to implementation, the final design plans for the Grand Avenue streetscape improvements shall be reviewed by a qualified architectural historian or historic preservation consultant who satisfies the Secretary of the Interior's Professional Qualification Standards for History or Architectural History to assure that the final design for the streetscape improvements does not materially alter the Cathedral of Our Lady of the Angels' potential historic significance. This evaluation shall be conducted in accordance with the Secretary of the Interior's Standards.~~

~~**Mitigation Measure D-4: Kenneth Hahn Hall of Administration.** No mitigation measures are required if the final design for the Civic Park and the Grand Avenue streetscape improvements are in substantial conformance to that set forth in the Project's Conceptual Plan, as determined by the Authority, since such Plan is consistent with the Secretary of Interior's Standards of Rehabilitation of Historic Buildings and the Guidelines for the Treatment of Cultural Landscapes (collectively referred to as the "Standards"). However, should the final design for the Civic Park and the streetscape improvements not be implemented in substantial conformance with the Project's Conceptual Plan, prior to the start of each construction phase, the responsible parties for implementation of the Civic Park and Streetscape Program, under the applicable agreements, shall submit plans to the Authority, for review and approval to ensure that impacts to the potential eligibility of the Kenneth Hahn Hall of Administration as a contributing property to the potentially eligible Los Angeles Civic Center Historic District are reduced to the maximum extent practicable through implementation of the following mitigation measure:~~

~~Prior to implementation, the final design plans for the Civic Park and the Grand Avenue streetscape improvements shall be reviewed by a qualified architectural historian or historic preservation consultant who satisfies the Secretary of the Interior's Professional Qualification Standards for History or Architectural History to assure that the final designs for the Civic Park and streetscape improvements do not materially alter the Kenneth Hahn Hall of Administration's potential historic significance. This evaluation shall be conducted in accordance with the Secretary of the Interior's Standards. The County's CAO or its designee shall determine compliance for the Civic Park, and the City's Department of Building and Safety shall determine compliance for the Streetscape Program.~~

~~**Mitigation Measure D-5: Civic Center Mall (El Paseo de los Pobladores de Los Angeles).** Prior to the start of each construction phase, the responsible parties for implementation of the Civic Park under the applicable agreements shall submit plans to the Authority, for review and approval to ensure that impacts to the potential eligibility of the Civic Center Mall for listing in the California Register are reduced to the maximum extent practicable. However, in the event that any one or more of the following occurs: (1) the water feature (both the fountain and pools) no longer serves as a focal point for the park; (2) many of the pink granite clad planters, pink granite clad retaining walls, and concrete benches are not retained and reused in place or within the reconfigured park preferably near the water feature and adjacent to the civic~~

~~buildings; (3) the existing elevator shaft structures are removed in their totality, or (4) many of the light poles with saucer like canopies and the "hi fi" speaker poles with saucer like canopies are not retained in place or relocated adjacent to or integrated along with the water feature, benches, retaining walls, and planter boxes, then the Standards shall be utilized to ensure that rehabilitation work to the four character-defining features of the park referenced in this Mitigation Measure D-5 does not impair the historic characteristics that convey the Civic Center Mall's historical significance as an individual resource and as a contributing property to the potentially eligible Los Angeles Civic Center Historic District. If such compliance with such Standards cannot be achieved, then the following measures shall apply to the applicable character-defining features identified in this Measure:~~

~~Recordation. Prior to the issuance of a demolition permit for the Civic Center Mall and its associated features, a Historic American Building Survey (HABS) Level II-like recordation document shall be prepared for the Civic Center Mall. A qualified architectural historian or historic preservation consultant who satisfies the Secretary of the Interior's Professional Qualification Standards for History or Architectural History shall prepare this document. The HABS-like document shall record the existing landscape and hardscape features of the Civic Center Mall, including the four character-defining features identified in this measure. The report shall also document the history and architectural significance of the property and its contextual relationship with the surrounding civic buildings and environment. Its physical composition and condition, both historic and current, should also be noted in the document through the use of site plans, historic maps and photographs, and large format photographs, newspaper articles, and written text. A sufficient number of large format photographs shall be taken of the resource to visually capture its historical and architectural significance through general views and detail shots. Field photographs (35mm or digital format) may also be included in the recordation package. All document components and photographs should be completed in accordance with the Secretary of the Interior's Standards and Guidelines for Architectural and Engineering Documentation. Archival copies of the report, including the original photographs, shall be submitted to the California Office of Historic Preservation and the Huntington Library. Non-archival copies of the report and photographs shall be submitted to the County of Los Angeles, the City of Los Angeles Planning Department, the Los Angeles Public Library (Main Branch), and the Los Angeles Conservancy Modern Committee.~~

~~Salvage and Reuse of Key Park Features. Prior to the removal of the four character-defining features identified in this Measure, a qualified preservation consultant and landscape architect shall make an inventory of significant landscape and hardscape elements. . Where feasible, these materials and elements shall be itemized, mapped, photographed, salvaged, and incorporated into the new design of the park, wherever possible. To the extent salvageable materials cannot be reused on site, they shall be disposed of in accordance with applicable county surplus procedures.~~

~~Mitigation Measure D-6: Hall of Records. No mitigation measures are required if the final design for the Civic Park is in substantial conformance to that set forth in the Project's Conceptual Plan, as determined by the Authority, since such Plan is consistent with the Secretary of Interior's Standards of Rehabilitation of Historic Buildings and the Guidelines for the Treatment of Cultural Landscapes~~

~~(collectively referred to as the "Standards"). However, should the final design for the Civic Park not be implemented in substantial conformance with the Project's Conceptual Plan, prior to the start of each construction phase, the responsible parties for implementation of the Civic Park under the applicable agreements shall submit plans to the Authority, for review and approval to ensure that impacts to the potential eligibility of the Hall of Records building as a contributing property to the potentially eligible Los Angeles Civic Center Historic District are reduced to the maximum extent practicable through implementation of the following mitigation measure:~~

~~Prior to implementation, the final design plans for the Civic Park shall be reviewed by a qualified architectural historian or historic preservation consultant who satisfies the Secretary of the Interior's Professional Qualification Standards for History or Architectural History to assure that the proposed Civic Park design does not materially alter the Hall of Records' potential historic significance. This evaluation shall be conducted in accordance with the Secretary of the Interior's Standards.~~

~~**Mitigation Measure D-7:** Court of Flags. No mitigation measures are required if the final design for the Civic Park is in substantial conformance to that set forth in the Project's Conceptual Plan, as determined by the Authority, since such Plan is consistent with the Secretary of Interior's Standards of Rehabilitation of Historic Buildings and the Guidelines for the Treatment of Cultural Landscapes (collectively referred to as the "Standards"). However, should the final design for the Civic Park not be implemented in substantial conformance with the Project's Conceptual Plan, prior to the start of each construction phase, the responsible parties for implementation of the Civic Park under the applicable agreements shall submit plans to the Authority for review and approval to ensure that impacts to the potential eligibility of the Court of Flags as a contributing property to the potentially eligible Los Angeles Civic Center Historic District are reduced to the maximum extent practicable through implementation of the following mitigation measure:~~

~~Prior to implementation, the final design plans for the Civic Park shall be reviewed by a qualified architectural historian or historic preservation consultant who satisfies the Secretary of the Interior's Professional Qualification Standards for History or Architectural History to assure that the proposed Civic Park design does not materially alter the Court of Flag's potential historic significance. This evaluation shall be conducted in accordance with the Secretary of the Interior's Standards.~~

~~**Mitigation Measure D-8:** Clara Shortridge Foltz Criminal Justice Center. No mitigation measures are required if the final design for the Civic Park is in substantial conformance to that set forth in the Project's Conceptual Plan, as determined by the Authority, since such Plan is consistent with the Secretary of Interior's Standards of Rehabilitation of Historic Buildings and the Guidelines for the Treatment of Cultural Landscapes (collectively referred to as the "Standards"). However, should the final design for the Civic Park not be implemented in substantial conformance with the Project's Conceptual Plan, prior to the start of each construction phase, the responsible parties for implementation of the Civic Park under the applicable agreements shall submit plans to the Authority, for review and approval to ensure that impacts to the potential eligibility of the Clara Shortridge Foltz Criminal Justice Center as a~~

~~contributing property to the potentially eligible Los Angeles Civic Center Historic District are reduced to the maximum extent practicable through implementation of the following mitigation measure:~~

~~Prior to implementation, the final design plans for the Civic Park shall be reviewed by a qualified architectural historian or historic preservation consultant who satisfies the Secretary of the Interior's Professional Qualification Standards for History or Architectural History to assure that the proposed Civic Park does not materially alter the Clara Shortridge Foltz Criminal Justice Center's potential historic significance. This evaluation shall be conducted in accordance with the Secretary of the Interior's Standards.~~

~~**Mitigation Measure D-9:** Los Angeles City Hall. No mitigation measures are required if the final design for the Civic Park is in substantial conformance to that set forth in the Project's Conceptual Plan, as determined by the Authority, since such Plan is consistent with the Secretary of Interior's Standards of Rehabilitation of Historic Buildings and the Guidelines for the Treatment of Cultural Landscapes (collectively referred to as the "Standards"). However, should the final design for the Civic Park not be implemented in substantial conformance with the Project's Conceptual Plan, prior to the start of each construction phase, the responsible parties for implementation of the Civic Park under the applicable agreements shall submit plans to the Authority, for review and approval to ensure that impacts to those historic characteristics that make the Los Angeles City Hall building historically significant as a designated resource and as a contributing property to the potentially eligible Los Angeles Civic Center Historic District, are reduced to the maximum extent practicable through implementation of the following mitigation measure:~~

~~Prior to implementation, the final design plans for the Civic Park shall be reviewed by a qualified architectural historian or historic preservation consultant who satisfies the Secretary of the Interior's Professional Qualification Standards for History or Architectural History to assure that the proposed Civic Park design does not materially alter the historic significance of the Los Angeles City Hall. This evaluation shall be conducted in accordance with the Secretary of the Interior's Standards.~~

~~**Mitigation Measure D-10:** Los Angeles County Law Library. No mitigation measures are required if the final design for the Civic Park is in substantial conformance to that set forth in the Project's Conceptual Plan, as determined by the Authority, since such Plan is consistent with the Secretary of Interior's Standards of Rehabilitation of Historic Buildings and the Guidelines for the Treatment of Cultural Landscapes (collectively referred to as the "Standards"). However, should the final design for the Civic Park not be implemented in substantial conformance with the Project's Conceptual Plan, prior to the start of each construction phase, the responsible parties for implementation of the Civic Park under the applicable agreements shall submit plans to the Authority, for review and approval to ensure that impacts to the potential eligibility of the potentially eligible Los Angeles County Law Library as a contributing property to the Los Angeles Civic Center Historic District are reduced to the maximum extent practicable through implementation of the following mitigation measure:~~

~~Prior to implementation, the final design plans for the Civic Park shall be reviewed by a qualified architectural historian or historic preservation consultant who satisfies the Secretary of the Interior's Professional Qualification Standards for History or Architectural History to assure that the proposed Civic Park design does not materially alter the Los Angeles County Law Library's potential historic significance. This evaluation shall be conducted in accordance with the Secretary of the Interior's Standards.~~

~~**Mitigation Measure D 11:** Los Angeles County Courthouse. No mitigation measures are required if the final design for the Civic Park and the Grand Avenue streetscape improvements are in substantial conformance to that set forth in the Project's Conceptual Plan, as determined by the Authority, since such Plan is consistent with the Secretary of Interior's Standards of Rehabilitation of Historic Buildings and the Guidelines for the Treatment of Cultural Landscapes (collectively referred to as the "Standards"). However, should the final design for the Civic Park and the streetscape improvements not be implemented in substantial conformance with the Project's Conceptual Plan, prior to the start of each construction phase, the responsible parties for implementation of the Civic Park and the Streetscape Program under the applicable agreements shall submit plans to the Authority, for review and approval to ensure that impacts to the potential eligibility of the Los Angeles County Courthouse as a contributing property to the potentially eligible Los Angeles Civic Center Historic District are reduced to the maximum extent practicable through implementation of the following mitigation measure:~~

~~Prior to implementation, the final design plans for the Civic Park and the Grand Avenue streetscape improvements shall be reviewed by a qualified architectural historian or historic preservation consultant who satisfies the Secretary of the Interior's Professional Qualification Standards for History or Architectural History to assure that the proposed final designs for the Civic Park and streetscape improvements do not materially alter the Los Angeles County Courthouse's potential historic significance. This evaluation shall be conducted in accordance with the Secretary of the Interior's Standards. The County's CAO or its designee shall determine compliance for the Civic Park, and the City's Department of Building and Safety shall determine compliance for the Streetscape Program.~~

~~**Mitigation Measure D 12:** Southern California Edison (One Bunker Hill). No mitigation measures are required if the Grand Avenue streetscape improvements are implemented in substantial conformance to that set forth in the Project's Conceptual Plan, as determined by the Authority, since such Plan is consistent with the Secretary of Interior's Standards of Rehabilitation of Historic Buildings and the Guidelines for the Treatment of Cultural Landscapes (collectively referred to as the "Standards"). However, should the final design for the Grand Avenue streetscape improvements are not implemented in substantial conformance with the Project's Conceptual Plan, the responsible parties for implementation of the Streetscape Program under the applicable agreements shall submit plans to the Authority for review and approval to ensure that impacts to the historic characteristics that convey the Southern California Edison Building's (One Bunker Hill) significance are reduced to the maximum extent practicable through implementation of the following mitigation measure:~~

~~Prior to implementation, the final design plans for the Grand Avenue streetscape improvements shall be reviewed by a qualified architectural historian or historic preservation consultant who satisfies the Secretary of the Interior's Professional Qualification Standards for History or Architectural History to assure that the final design for the proposed streetscape improvements does not materially alter the Southern California Edison (One Bunker Hill) Buildings' historic significance. This evaluation shall be conducted in accordance with Secretary of the Interior's Standards.~~

5. Population and Housing

The Project would result in no significant impacts on population, housing and employment, and no mitigation measures are required.

6. Air Quality

Mitigation Measure F-1: During each construction phase, the Developer, with regard to the five development parcels, and the responsible parties for implementation of the Civic Park and Streetscape Program under the applicable agreements shall implement a fugitive dust control program pursuant to the provisions of SCAQMD Rule 403. The City's Department of Building and Safety, or other appropriate City agency or department, shall determine compliance with SCAQMD Rule 403 during construction with regard to construction associated with the five development parcels and the Grand Avenue Streetscape Program.. The County's CAO or its designee shall determine compliance with regard to the Civic Park. The SCAQMD retains jurisdiction to enforce this measure in the case of noncompliance. Compliance with the applicable provisions of Rule 403 shall include, but not be limited to, using best available control measures listed in Table 1 of Rule 403 to minimize fugitive dust emissions from each fugitive dust source type within active operations, and will include at least the following specific best management practices (BMPs):

- Water soils daily and not more than 15 minutes prior to earth moving activities;
- Water surfaces two times per day or more in order to maintain a surface crust to prevent soil erosion;
- Apply soil conditioners or vegetative cover to areas that will be exposed for an extended duration;
- Apply chemical stabilizers within five working days of ceasing grading;
- Install approved trackout prevention devices and provide street sweeping within the Project area;
- Securely cover truck loads with a tarp;

- Cease grading activities when wind speeds exceed 25 miles per hour;
- Permanently seal exposed surfaces as soon as possible after grading is finished; and
- Provide temporary wind fencing, consisting of wrapped chain link or solid fencing, around the sites that are being graded/excavated to reduce dirt/dust from being blown over to adjoining properties.

Mitigation Measure F-2: During each construction phase, the Developer, with regard to the five development parcels and the responsible parties for implementation of the Civic Park and Streetscape Program under the applicable agreements, shall utilize coatings and solvents that are consistent with applicable SCAQMD rules and regulations. The City's Department of Building and Safety, or other appropriate City agency or department, shall provide oversight with regard to compliance with this measure with regard to construction associated with the five development parcels and the Streetscape Program. The County's CAO or its designee shall determine compliance with regard to the Civic Park. The SCAQMD retains jurisdiction to enforce this measure in the case of noncompliance.

Mitigation Measure F-3: During each construction phase, the Developer, with regard to the five development parcels, and the responsible parties for implementation of the Civic Park and Streetscape Program under the applicable agreements, shall comply with SCAQMD Rule 402 to reduce potential nuisance impacts due to odors from construction activities. The City's Department of Building and Safety, or other appropriate City agency or department, shall provide oversight with regard to compliance with this measure with regard to construction associated with the five development parcels and the Streetscape Program. The County's CAO or its designee shall provide oversight with regard to compliance with this measure with regard to the Civic Park. The SCAQMD retains jurisdiction to enforce this measure in the case of noncompliance.

Mitigation Measure F-4: During each construction phase, the Developer, with regard to the five development parcels, and the responsible parties for implementation of the Civic Park and Streetscape Program under the applicable agreements shall ensure that all haul truck tires shall be cleaned at the time these vehicles exit the Project site. The City's Department of Building and Safety, or other appropriate City agency or department, shall provide oversight with regard to compliance with this measure with regard to construction associated with the five development parcels and the Streetscape Program. The County's CAO or its designee shall provide oversight with regard to compliance with this measure with regard to the Civic Park. The SCAQMD retains jurisdiction to enforce this measure in the case of noncompliance.

Mitigation Measure F-5: During each construction phase, the Developer, with regard to the five development parcels, and the responsible parties for implementation of the Civic Park and Streetscape Program under the applicable agreements shall ensure that all export material carried by haul trucks shall be covered by a tarp or other means. The City's Department of Building and Safety, or other appropriate

City agency or department, shall provide oversight with regard to compliance with this measure with regard to construction associated with the five development parcels and the Streetscape Program. The County's CAO or its designee shall provide oversight with regard to compliance with this measure with regard to the Civic Park. The SCAQMD retains jurisdiction to enforce this measure in the case of noncompliance.

Mitigation Measure F-6: During each construction phase, the Developer, with regard to the five development parcels, and the responsible parties for implementation of the Civic Park and Streetscape Program under the applicable agreements shall ensure that all construction equipment shall be properly tuned and maintained in accordance with manufacturer's specifications. The City's Department of Building and Safety, or other appropriate City agency or department, shall determine compliance with this measure with regard to construction associated with the five development parcels and the Streetscape Program. The County's CAO or its designee shall determine compliance with this measure with regard to the Civic Park.

Mitigation Measure F-7: During each construction phase, the Developer, with regard to the five development parcels, and the responsible parties for implementation of the Civic Park and Streetscape Program under the applicable agreements shall ensure that construction equipment is maintained and operated so as to minimize exhaust emissions. During construction, trucks and vehicles in loading and unloading queues shall turn off their engines, when not in use, to reduce vehicle emissions. Construction emissions shall be phased and scheduled to avoid emissions peaks and discontinued during second-stage smog alerts. The City's Department of Building and Safety, or other appropriate City agency or department, shall determine compliance with this measure with regard to construction activities associated with the five development parcels and the Streetscape Program. The County's CAO or its designee shall determine compliance with this measure with regard to the Civic Park.

Mitigation Measure F-8: During each construction phase, the Developer, with regard to the five development parcels, and the responsible parties for implementation of the Civic Park and Streetscape Program under the applicable agreements shall ensure that electricity rather than temporary diesel- or gasoline-powered generators shall be used to the extent feasible. The City's Department of Building and Safety, or other appropriate City agency or department, shall determine compliance with this measure with regard to construction associated with the five development parcels and the Streetscape Program. The County's CAO or its designee shall determine compliance with this measure with regard to the Civic Park.

Mitigation Measure F-9: During each construction phase, the Developer, with regard to the five development parcels, and the responsible parties for implementation of the Civic Park and Streetscape Program under the applicable agreements shall ensure that all construction vehicles shall be prohibited from idling in excess of five minutes, both on- and off-site. The City's Department of Building and Safety, or other appropriate City agency or department, shall determine compliance with this measure with regard to construction associated with the five development parcels and the Streetscape Program.

The County's CAO or its designee shall determine compliance with this measure with regard to the Civic Park.

Mitigation Measure F-10: During each construction phase, the Developer, with regard to the five development parcels, and the responsible parties for implementation of the Civic Park and Streetscape Program under the applicable agreements shall ensure that heavy-duty construction equipment shall use alternative clean fuels, such as low sulfur diesel or compressed natural gas with oxidation catalysts or particulate traps, to the extent feasible. The City's Department of Building and Safety, or other appropriate City agency or department, shall determine compliance with this measure with regard to the five development parcels and the Streetscape Program. The County's CAO or its designee shall determine compliance with this measure with regard to the Civic Park.

Mitigation Measure F-11: During each construction phase, the Developer, with regard to the five development parcels, and the responsible parties with regard implementation of the Civic Park and Streetscape Program under the applicable agreements shall ensure that shuttle service shall be provided to construction workers who are required to park in offsite parking lots, if such lots are not within a walking distance of 1,100 feet from the respective construction sites. The CRA/LA shall determine compliance with this measure with regard to construction associated with the five development parcels and the Streetscape Program. The County's CAO or its designee shall determine compliance with this measure with regard to the Civic Park.

Mitigation Measure F-12: During each construction phase, the Developer, with regard to the five development parcels, and the responsible parties for implementation of the Civic Park and Streetscape Program under the applicable agreements shall equip major earth moving equipment, haul trucks, and excavation equipment with particulate filters and catalytic converters. The City's Department of Building and Safety, or other appropriate City agency or department, shall determine compliance with this measure with regard to construction associated with the five development parcels and the Streetscape Program. The County's CAO or its designee shall determine compliance with this measure with regard to the Civic Park.

Mitigation Measure F-13: During Project operations, the Developer, with regard to the five development parcels, and the responsible parties for implementation of the Civic Park under the applicable agreements shall, to the extent feasible, ensure that deliveries are scheduled during off-peak traffic periods to encourage the reduction of trips during the most congested periods. The City's Department of Building and Safety, or other appropriate City agency or department, shall determine compliance with this measure, with regard to the five development parcels. The County's CAO or its designee shall determine compliance with this measure with regard to the Civic Park.

Mitigation Measure F-14: During Project operations, the Developer, with regard to the five development parcels, and the responsible parties for implementation of the Civic Park, under the applicable agreements, shall coordinate with the MTA and the City of Los Angeles Department of

Transportation to provide information to Project employees, residents and guests with regard to local bus and rail services.

Mitigation Measure F-15: Provide the appropriate number of bicycle racks located at convenient locations in the Project site. The Developer shall implement this measure with regard to the five development parcels prior to initial building occupancy for each construction phase, while the responsible parties for the implementation of the Civic Park, under the applicable agreements, shall implement these measures prior to the completion of each construction phase. The City's Department of Building and Safety shall review and approve the number and location of the bicycle racks with regard to the five development parcels. The County's CAO or its designee shall perform the same function with regard to the Civic Park.

Mitigation Measure F-16: During on-going Project operations, the Developer, with regard to the five development parcels, and the responsible parties for implementation of the Civic Park, under the applicable agreements, shall ensure that all fixtures used for lighting of exterior common areas shall be regulated by automatic devices to turn off lights when they are not needed, but a minimum level of lighting should be provided for safety. The City's Department of Building and Safety, or other appropriate City agency or department, shall determine compliance with this mitigation measure with regard to the five development parcels. The County's CAO or its designee shall determine compliance with this measure with regard to the Civic Park.

Project Design Feature F-1: During site plan review for each construction phase, the Developer, with regard to the five development parcels, and the responsible parties for implementation of the Civic Park under the applicable agreements shall give consideration to the provision of safe and convenient access to bus stops and public transportation facilities. Pedestrian access plans to bus stops and transit facilities shall be submitted to the Authority, for review and approval. Approved access plans shall be implemented by the responsible parties.

Project Design Feature F-2: The Developer, with regard to the five development parcels, and the responsible parties for implementation of the Civic Park under the applicable agreements shall provide convenient pedestrian access throughout the Project site. The Developer shall implement this measure with regard to the five development parcels prior to initial building occupancy for each construction phase, while the responsible parties for the implementation of the Civic Park and Streetscape Program, under the applicable agreements, shall implement these measures prior to the completion of construction for each of these Project components. Pedestrian access plans shall be submitted to the Authority, for review and approval. Approved pedestrian access plans shall be implemented by the responsible parties.

Regulatory Measure F-1: During Project operations, The Developer, with regard to the five development parcels, and the responsible parties for implementation of the Civic Park under the applicable agreements shall ensure that all point source facilities shall obtain all required permits from the SCAQMD. The issuance of these permits by the SCAQMD shall require the operators of these facilities

to implement Best Available Control Technology and other required measures that reduce emissions of criteria air pollutants. Proof of permit issuance by the SCAQMD shall be provided to the City's Department of Building and Safety, or other appropriate City agency or department, with regard to the five development parcels, and the County's CAO or its designee with regard to the Civic Park. Compliance with point source permits shall be enforced by the SCAQMD for all Project components.

Project Design Feature F-3: During Project operations, the Developer, with regard to the five development parcels, shall ensure that commercial businesses located within the Project site shall be limited to those that do not emit high levels of potentially toxic air contaminants or odors (e.g., dry cleaners with on-site processing plants that handle toxic chemicals). The City's Department of Building and Safety, or other appropriate City agency or department, shall be responsible for the enforcement of this measure with regard to the five development parcels.

Regulatory Measure F-2: Prior to the start of each construction phase, the Developer, with regard to the five development parcels, and the responsible parties for implementation of the Civic Park, under the applicable agreements, shall prepare and implement building plans and specifications that ensure that all residential and non-residential buildings shall, at a minimum, meet the California Title 24 Energy Efficiency standards for water heating, space heating and cooling. Approved building plans shall be implemented by the Developer and the responsible parties. Building plans and specifications with regard to the five development parcels shall be reviewed and approved by the City's Department of Building and Safety, or other appropriate City agency or department. Building plans and specifications with regard to the Civic Park shall be reviewed and approved by the County's CAO or its designee.

Regulatory Measure F-3: During each construction phase, the Developer with regard to the five development parcels, and the responsible parties for implementation of the Civic Park under the applicable agreements shall ensure that building materials, architectural coatings and cleaning solvents shall comply with all applicable SCAQMD rules and regulations. The City's Department of Building and Safety, or other appropriate City agency or department, shall determine compliance with this measure with regard to construction associated with the five development parcels. The County's CAO or its designee shall determine compliance with this measure with regard to the Civic Park. The SCAQMD retains enforcement of this measure for all Project components in the case of noncompliance.

7. Noise

Mitigation Measure G-1: To reduce any impact on nearby venues that may be noise sensitive receptors, such as the Music Center, Walt Disney Concert Hall, and the County Courthouse, the following Measures G-1 and G-2 shall be implemented as follows: During each construction phase, the Developer, with regard to the five development parcels and the responsible parties for implementation of the Civic Park and Streetscape Program under the applicable agreements shall limit (i) construction activities utilizing heavy equipment to Monday through Friday from 7:00 A.M. to 8:00 P.M., and (ii) interior construction work inside building shells and construction activities not utilizing heavy equipment to 7:00 A.M. to 9:00

P.M Monday through Friday. Saturday construction shall be limited to 8:00 A.M. to 6:00 P.M. No exterior construction activities shall be permitted on Sundays or holidays per applicable City regulations. Construction noise measures shall also be implemented, which may include the use of noise mufflers on construction equipment used within 100 feet of these buildings. The City's Department of Building and Safety, or other appropriate City agency or department, shall determine compliance with this measure with regard to the five development parcels and the City's Department of Building and Safety or other appropriate City agency or department shall determine compliance with this measure with regard to the five development parcels and the Streetscape Program. The County's CAO or its designee shall determine compliance with this measure with regard to the Civic Park.

Mitigation Measure G-2: During each construction phase, the Developer, with regard to the five development parcels and the responsible parties for implementation of Civic Park and the Streetscape Program shall not use heavy equipment within (to the maximum extent practicable) 100 feet of the County Courthouse building while Court is in session. Construction contracts must specify that all construction equipment shall be in proper operating condition and fitted with standard factory silencing features and other applicable attenuation devices such as mufflers. The City's Department of Building and Safety or other appropriate City agency or department, shall determine compliance with this measure with regard to the five development parcels and the Streetscape Program. The County's CAO or its designee shall determine compliance with this measure with regard to the Civic Park.

Mitigation Measure G-3: During the initial stage of each construction phase (site demolition and site preparation/excavation) for each Project parcel and when construction activities are within 200 feet of noise sensitive land uses, the Developer, with regard to the five development parcels, shall erect a temporary, 8-foot, ½-inch-thick plywood fence along the boundaries of each construction site adjacent to noise sensitive uses such that the "line of sight" between on-site construction activities and the residential or other sensitive uses is blocked, where feasible. The City's Department of Building and Safety, or other appropriate City agency or department, shall determine compliance with this measure with regard to the five development parcels.

Mitigation Measure G-4: During each construction phase, the Developer, with regard to the five development parcels, and the responsible parties for implementation of the Civic Park and Streetscape Program under the applicable agreements shall ensure that pile drivers within the individual activity/development site under construction at that time shall be equipped with noise control devices having a minimum quieting factor of 10 dBA. The City's Department of Building and Safety, or other appropriate City agency or department, shall determine compliance with this measure with regard to construction in the five development parcels and the Streetscape Program. The County's CAO or its designee shall determine compliance with this measure with regard to the Civic Park.

Mitigation Measure G-5: During each construction phase, the Developer, with regard to the five development parcels, and the responsible parties for implementation of the Civic Park and Streetscape Program under the applicable agreements shall, except as otherwise permitted by applicable agreements,

ensure that construction loading and staging areas shall be located on the Project site within each respective construction site and away from noise-sensitive uses to the extent feasible. The City's Department of Building and Safety, or other appropriate City agency or department, shall determine compliance with this measure with regard to construction in the five development parcels and the Streetscape Program. The County's CAO or its designee shall determine compliance with this measure with regard to the Civic Park.

Mitigation Measure G-6: Prior to the issuance of grading permits for each construction phase, the Developer, with regard to the five development parcels, and the responsible parties for implementation of the Civic Park and Streetscape Program under the applicable agreements, shall prepare, and thereafter implement, plans and specifications that include a requirement to route pedestrians (to the maximum extent practicable) 50 feet away from the construction area when heavy equipment such as hydraulic excavators is in use. Such routing may include the posting of signs at adjacent intersections. The City's Department of Building and Safety, or other appropriate City agency or department, shall determine compliance with this measure with regard to the five development parcels and the Streetscape Program. The County's CAO or its designee shall determine compliance with this measure with regard to the Civic Park.

Mitigation Measure G-7: During each construction phase, the Developer, with regard to the five development parcels, and the responsible parties for implementation of the Civic Park and Streetscape Program under the applicable agreements, shall designate a construction relations officer to serve as a liaison with surrounding property owners who is responsible for responding to any concerns regarding construction noise. The liaison shall coordinate with the Project construction manager(s) to implement remedial measures in the shortest time feasible. The liaison's telephone number(s) shall be prominently displayed at multiple locations along the perimeter of each construction site. The City's Department of Building and Safety, or other appropriate City agency or department, shall determine compliance with this measure with regard to the five development parcels and the Streetscape Program. The County's CAO or its designee shall determine compliance with this measure with regard to the Civic Park.

Mitigation Measure G-8: The Developer, with regard to the five development parcels, shall prepare and implement building plans that ensure prior to the start of each construction phase, which includes residential development that all exterior walls, floor-ceiling assemblies (unless within a unit), and windows having a line of sight (30 degrees measured from the horizontal plane) of Grand Avenue, Hill Street, Hope Street, First Street, and Second Street of such residential development shall be constructed with double-paned glass or an equivalent and in a manner to provide an airborne sound insulation system achieving a lab-tested Sound Transmission Class of 30, subject to field testing, as defined in the UBC Standard No. 35 1, 1982 edition. Sign-off by the City's Department of Building and Safety, or other appropriate City agency or department, shall be required prior to obtaining a building permit. The Developer, as an alternative, may retain an engineer registered in the State of California with expertise in acoustical engineering, who shall submit a signed report for an alternative means of sound insulation satisfactory to the City's Department of Building and Safety, or other appropriate City agency or

department. Examples of alternative means may include, but are not limited to, the following: (1) acoustical seals for doors and windows opening to the exterior; (2) consideration of the type, location, and size of windows; and (3) sealing or baffling of openings and vents. The City's Department of Building and Safety, or other appropriate City agency or department, shall determine compliance with this measure.

8. Hazards and Hazardous Materials

Regulatory Measure H-1: Prior to the start of each construction phase, the Developer, with regard to the five development parcels, shall properly decommission all unused groundwater monitoring wells, per applicable regulations. The City's Department of Building and Safety, or other appropriate City agency or department, shall determine compliance with this measure with regard to the five development parcels. The Regional Water Quality Control Board shall enforce compliance with this measure.

Regulatory Measure H-2: Prior to the start of each construction phase, the Developer, with regard to the five development parcels, shall test for the presence or absence of hydrogen sulfide and methane beneath the site by subsurface sampling. Should the sampling result in the discovery of hydrogen sulfide and/or methane, appropriate health and safety measures shall be implemented in accordance with applicable regulations. The City's Department of Building and Safety, or other appropriate City agency or department, shall determine compliance with this measure.

Regulatory Measure H-3: Prior to the start of each construction phase, the Developer, with regard to the five development parcels, shall take fill samples from each of the five parcels, and shall analyze these samples for contaminants at elevated concentrations. Should elevated contaminant concentrations be discovered, appropriate measures shall be implemented in accordance with applicable regulations. The City's Department of Building and Safety, or other appropriate City agency or department, shall determine compliance with this measure.

~~**Regulatory Measure H-4:** Prior to the start of each construction phase, the responsible parties for implementation of the Civic Park and Streetscape Program under the applicable agreements, shall undertake an appropriate investigation to ascertain whether any hazardous conditions would occur as a function of implementing the streetscape improvements along Grand Avenue and/or the Civic Park. Should elevated concentrations of contaminants be identified, appropriate measures shall be implemented in accordance with applicable regulations. The City's Department of Building and Safety, or other appropriate City agency or department, shall determine compliance with this measure with regard to the Streetscape Program. The County's CAO or its designee shall determine compliance with this measure with regard to the Civic Park.~~

~~**Regulatory Measure H-5:** Prior to demolition or renovation in the Civic Center Mall, the responsible parties for implementation of the Civic Park under the applicable agreements shall perform an asbestos-sampling survey to determine the presence of asbestos containing materials. If such materials should be~~

~~found, the responsible parties for implementation of the Civic Park shall prepare and implement an Operations and Maintenance Plan that meets all applicable federal, state and local requirements. This plan shall safely maintain asbestos containing materials that remain on the site. The County's CAO or its designee shall determine compliance with this measure.~~

~~**Regulatory Measure H-6:** Prior to the start of any demolition activities or renovation on any painted surfaces at the Project site, the Developer, with regard to the five development parcels, and the responsible parties for implementation of the Civic Park under the applicable agreements shall conduct a survey of lead based paint (LBP) to determine the level of risk posed to maintenance personnel, construction workers, facility staff, and patrons from exposure to the paints present at the site. Any recommendations made in that survey related to the paints present at the Project site shall be implemented prior to the demolition or renovation of said painted surfaces. The City's Department of Building and Safety, or other appropriate City agency or department, shall determine compliance with this measure with regard to the five development parcels. The County's CAO or its designee shall determine compliance with this measure with regard to the Civic Park.~~

9. Fire Services

~~**Regulatory Measure I.1-1:** During demolition activities occurring during each construction phase, the Developer, with regard to the five development parcels, and the responsible parties for implementation of the Civic Park and Streetscape Program under the applicable agreements shall ensure sure that emergency access shall remain clear and unobstructed. The LAFD shall determine compliance with this measure with regard to the five development parcels and the Streetscape Program. The County Fire Department (LACoFD) shall determine compliance with this measure with regard to the Civic Park.~~

Regulatory Measure I.1-2: Prior to each construction phase, the Developer, with regard to the five development parcels, and the responsible parties for implementation of the Civic Park under the applicable agreements shall prepare, and thereafter implement, plans and specifications to ensure that the construction contractor is apprised of the requirement to maintain access to sub-surface parking structures associated with the Civic Center Mall, the Music Center, and the Colburn School for Performing Arts. The LAFD shall determine compliance with this measure with regard to the five development parcels. The LACoFD shall determine compliance with this measure with regard to the Civic Park.

Regulatory Measure I.1-3: During each construction phase, the Developer, with regard to the five development parcels, and the responsible parties for implementation of the Civic Park and Streetscape Program under the applicable agreements shall maintain access for emergency response personnel to the Kenneth Hahn Hall of Administration, the Paseo de los Pobladores de Los Angeles, the County Courthouse, the Colburn School for Performing Arts, and the Walt Disney Concert Hall. The LAFD shall determine compliance with this measure with regard to construction in the five development parcels and the Streetscape Program. The LACoFD shall determine compliance with this measure with regard to the Civic Park.

Regulatory Measure I.1-4: Prior to each construction phase, the Developer, with regard to the five development parcels, and the responsible parties for implementation of the Civic Park and Streetscape Program under the applicable agreements shall prepare, and thereafter implement, a plan to ensure that emergency evacuation from the northwest side of the County Mall and Colburn School for Performing Arts, the southeast side of the Music Center and the Walt Disney Concert Hall would not be impeded by construction of the individual Project elements. With respect to the plan for the Mall, it must be prepared to coordinate with emergency evacuation plans for the Courthouse and the Hall of Administration. The LAFD shall determine compliance with this measure with regard to the five development parcels and the Streetscape Program. The LACoFD shall determine compliance with this measure with regard to the Civic Park.

Regulatory Measure I.1-5: During each construction phase, the Developer, with regard to the five development parcels, and the responsible parties for implementation of the Civic Park and Streetscape Program under the applicable agreements shall ensure that sufficient fire hydrants shall remain accessible at all times during Project construction. The LAFD shall determine compliance with this measure with regard to the five development parcels and the Streetscape Program. The LACoFD shall determine compliance with this measure with regard to the Civic Park.

Regulatory Measure I.1-6: Prior to the start of each construction phase and during Project operations, the Developer, with regard to the five development parcels shall comply with all applicable State and local codes and ordinances, and the guidelines found in the Fire Protection and Fire Prevention Plan, and the Safety Plan, both of which are elements of the General Plan of the City of Los Angeles (C.P.C. 19708). The City of Los Angeles Fire Department (LAFD) shall determine compliance with this measure with regard to the five development parcels.

Regulatory Measure I.1-7: During Project operations, the Developer, with regard to the five development parcels shall maintain all access roads, including fire lanes, in an unobstructed manner, and removal of obstructions shall be at the owner's expense. The entrance to all required fire lanes or required private driveways shall be posted with a sign no less than three square feet in area in accordance with Section 57.09.05 of the Los Angeles Municipal Code. The LAFD shall determine compliance with this measure with regard to the five development parcels.

Regulatory Measure I.1-8: Prior to the start of each construction phase, the Developer, with regard to the five development parcels and the responsible parties for implementation of the Streetscape Program under the applicable agreements, shall prepare, and thereafter implement, plans and specifications in accordance with LAFD requirements, and requirements for necessary permits shall be satisfied prior to commencement of construction on any portion of the five development parcels or the Streetscape Program. The LAFD shall determine compliance with this measure with regard to the five development parcels and the Streetscape Program.

~~**Regulatory Measure I.1-9:** Prior to the start of each construction phase, the responsible parties for implementation of the Civic Park under the applicable agreements shall prepare, and thereafter implement, plans in accordance with LACoFD requirements, and requirements for necessary permits shall be satisfied prior to commencement of construction on any portion of the Civic Park. The LACoFD shall determine compliance with this measure with regard to the Civic Park.~~

Regulatory Measure I.1-10: Prior to the start of each construction phase, the Developer, with regard to the five development parcels, and the responsible parties for implementation of the Civic Park and Streetscape Program under the applicable agreements shall prepare, and thereafter implement, a plan that will assure that any required fire hydrants that are installed shall be fully operational and accepted by the Fire Department prior to any building construction. The LAFD shall determine compliance with this measure with regard to the five development parcels and the Streetscape Program. The LACoFD shall determine compliance with this measure with regard to the Civic Park.

Regulatory Measure I.1-11: Prior to the start of each construction phase, the Developer, with regard to the five development parcels, shall submit plot plans indicating access roads and turning areas to the LAFD for review and approval. The Developer, with regard to the five development parcels shall implement the approved plot plans. The LAFD shall determine compliance with this measure.

Regulatory Measure I.1-12: Prior to the start of each construction phase, the Developer, with regard to the five development parcels, and the responsible parties for implementation of the Civic Park and Streetscape Program under the applicable agreements shall prepare, and thereafter implement, engineering plans that show adequate fire flow and placement of adequate and required public and private fire hydrants. The LAFD shall determine compliance with this measure with regard to the five development parcels and the Streetscape Program. The LACoFD shall determine compliance with this measure with regard to the Civic Park.

Regulatory Measure I.1-13: During each construction phase, the Developer, with regard to the five development parcels, and the responsible parties for implementation of the Civic Park under the applicable agreements shall provide emergency access for Fire Department apparatus and personnel to and into all structures. The LAFD shall determine compliance with this measure with regard to the five development parcels. The LACoFD shall determine compliance with this measure with regard to the Civic Park.

Regulatory Measure I.1-14: Prior to the start of each construction phase, the Developer, with regard to the five development parcels shall prepare, and thereafter implement, a plan that will provide that any private roadways for general access use and fire lanes shall not be less than 20 feet wide and clear to the sky. The LAFD shall determine compliance with this measure with regard to the five development parcels.

Regulatory Measure L1-15: Prior to the start of each construction phase, the Developer, with regard to the five development parcels shall prepare, and thereafter implement, a plan that will provide that any fire lanes and dead end streets shall terminate in a cul-de-sac or other approved turning area. No dead end street or fire lane shall be greater than 700 feet in length or secondary access shall be required. The LAFD shall determine compliance with this measure with regard to the five development parcels.

Regulatory Measure L1-16: Prior to the start of each construction phase, the Developer, with regard to the five development parcels shall prepare, and thereafter implement, a plan that designs any proposed development utilizing cluster, group, or condominium design not more than 150 feet from the edge of the roadway of an improved street, access road, or designated fire lane. The LAFD shall determine compliance with this measure with regard to the five development parcels.

Regulatory Measure L1-17: Prior to the start of each construction phase, the Developer, with regard to the five development parcels shall prepare, and thereafter implement, a plan that designs fire lanes to be not less than 28 feet in width. When a fire lane must accommodate the operation of Fire Department aerial ladder apparatus or where fire hydrants are installed, those portions shall not be less than 28 feet in width. The LAFD shall determine compliance with this measure with regard to the five development parcels.

Regulatory Measure L1-18: Prior to the start of each construction phase, the Developer, with regard to the five development parcels, where above ground floors are used for residential purposes, shall prepare, and thereafter implement, a plan that interprets the access requirement as being the horizontal travel distance from the street, driveway, alley, or designated fire lane to the main entrance of the residential units. The LAFD shall determine compliance with this measure.

Regulatory Measure L1-19: Prior to the start of each construction phase, the Developer, with regard to the five development parcels, shall prepare, and thereafter implement, a plan that designs the entrance or exit of all ground level residential units to be no more than 150 feet from the edge of a roadway of an improved street, access road, or designated fire lane. The LAFD shall determine compliance with this measure.

Regulatory Measure L1-20: Prior to the start of each construction phase, the Developer, with regard to the five development parcels shall prepare, and thereafter implement, a plan that provides access that requires the accommodation of Fire Department apparatus, shall design the minimum outside radius of the paved surface to be 35 feet. An additional six feet of clear space must be maintained beyond the outside radius to a vertical point 13 feet 6 inches above the paved surface of the roadway. The LAFD shall determine compliance with this measure with regard to the five development parcels.

Regulatory Measure L1-21: Prior to the start of each construction phase, the Developer, with regard to the five development parcels, shall not construct any building or portion of a building to be more than 150

feet from the edge of a roadway of an improved street, access road, or designated fire lane. The LAFD shall determine compliance with this measure with regard to the five development parcels.

Regulatory Measure I.1-22: Prior to the start of each construction phase, the Developer, with regard to the five development parcels, shall prepare, and thereafter implement, a plan that provides for access that requires accommodation of Fire Department apparatus, a design for overhead clearances to be not less than 14 feet. The LAFD shall determine compliance with this measure with regard to the five development parcels.

Regulatory Measure I.1-23: Prior to the start of each construction phase, the Developer, with regard to the five development parcels shall prepare, and thereafter implement, a plan that provides for additional vehicular access required by the Fire Department, where buildings exceed 28 feet in height. The LAFD shall determine compliance with this measure with regard to the five development parcels.

Regulatory Measure I.1-24: Prior to the start of each construction phase, the Developer, with regard to the five development parcels shall prepare, and thereafter implement, a plan that provides, where fire apparatus shall be driven onto the road level surface of the subterranean parking structure, for the structure to be engineered to withstand a bearing pressure of 8,600 pounds per square foot. The LAFD shall determine compliance with this measure with regard to the five development parcels.

Regulatory Measure I.1-25: Prior to the start of each construction phase, the Developer, with regard to the five development parcels shall record any private streets as Private Streets and Fire Lanes. All private street plans shall show the words "Private Street and Fire Lane" within the private street easement. The LAFD shall determine compliance with this measure with regard to the five development parcels.

Regulatory Measure I.1-26: During operation of the Project, the Developer, with regard to the five development parcels, shall provide that all electric gates approved by the Fire Department shall be tested by the Fire Department prior to Building and Safety, or other appropriate City agency or department, granting a Certificate of Occupancy. The LAFD shall determine compliance with this measure.

Regulatory Measure I.1-27. Prior to the start of each construction phase, the Developer, with regard to the five development parcels, and the responsible parties for implementation of the Civic Park under the applicable agreements, shall prepare, and thereafter implement, a plan that would not construct any building or portion of a building more than 300 feet from an approved fire hydrant. Distance shall be computed along path of travel with the exception that dwelling unit travel distance shall be computed to the front door of the unit. The LAFD shall determine compliance with this measure with regard to the five development parcels. The LACoFD shall determine compliance with this measure with regard to the Civic Park.

Regulatory Measure I.1-28. Prior to the start of each construction phase, the Developer, with regard to the five development parcels shall submit plans to the Fire Department for review and approval. Where

rescue window access is required, the Developer, with regard to the five development parcels, shall incorporate conditions and improvements necessary to meet accessibility standards as determined by the LAFD. The LAFD shall determine compliance with this measure.

Regulatory Measure I.1-29. During operations of the Project, the Developer, with regard to the five development parcels shall have the curbs of all public street and fire lane cul-de-sacs painted red and/or be posted "No Parking at Any Time" prior to the issuance of a Certificate of Occupancy or Temporary Certificate of Occupancy for any structures adjacent to the cul-de-sac. The LAFD shall determine compliance with this measure with regard to the five development parcels.

~~**Regulatory Measure I.1-30.** During operations of the Project, planning for large events at the Civic Park shall be implemented by the County or County Park Operator to reduce potential adverse affects on emergency access. As part of the planning process, representatives of the LACoFD, County Office of Public Safety, LAFD, LAPD and LADOT shall be advised of the activities and consulted to establish appropriate procedures for crowd and traffic control. Plans shall be submitted to the County Chief Administrative Officer for review and approval.~~

Project Design Feature I.1-1: Prior to the start of each construction phase, the Developer, with regard to the five development parcels shall submit building plans to the LAFD for review and approval that demonstrate that automatic fire sprinklers shall be installed in all structures. The LAFD shall determine compliance with this measure.

10. Police Services

Regulatory Measure I.2-1: During each construction phase, the Developer, with regard to the five development parcels, and the responsible parties for implementation of the Civic Park and Streetscape Program under the applicable agreements, shall provide clear and unobstructed LAPD access to the construction site. The LAPD shall determine compliance with this measure with regard to the five development parcels and the Streetscape Program. The County Office of Public Safety shall determine compliance with this measure with regard to the Civic Park.

Regulatory Measure I.2-2: During ongoing construction, the Developer, with regard to the five development parcels shall provide security features on the construction site(s), such as guards, fencing, and locked entrances. The LAPD shall determine compliance with this measure.

Regulatory Measure I.2-3: Prior to the start of each construction phase, the Developer, with regard to the five development parcels, shall submit plot plans for all proposed development to the Los Angeles Police Department's Crime Prevention Section for review and comment. Security features subsequently recommended by the LAPD shall be implemented by the Developer to the extent feasible.

~~**Regulatory Measure I.2-4:** Prior to the start of each construction phase, the responsible parties for implementation of the Civic Park under the applicable agreements shall submit plot plans for all proposed~~

~~development to the County Office of Public Safety for review and comment. Security features subsequently recommended by the Office of Public Safety shall be implemented by the County or County Park Operator to the extent feasible.~~

Regulatory Measure I.2-5: At the completion of each construction phase, the Developer, with regard to the five development parcels shall file as-built building plans with the LAPD Central Area Commanding Officer. Plans shall include access routes, floor plans, and any additional information that might facilitate prompt and efficient police response. The LAPD shall determine compliance with this measure.

Regulatory Measure I.2-6: During Project operations, the Developer, with regard to the five development parcels and the responsible parties for implementation of the Civic Park shall install alarms and/or locked gates on doorways providing public access to commercial facilities. The LAPD shall determine compliance with this measure with regard to the five development parcels. The County Office of Public Safety shall determine compliance with this measure with regard to the Civic Park.

Regulatory Measure I.2-7: During Project operations, the Developer, with regard to the five development parcels shall not plant landscaping in a way that could provide cover for persons tampering with doors or windows of commercial facilities, or for persons lying in wait for pedestrians or parking garage users. The LAPD shall determine compliance with this measure with regard to the five development parcels and the Streetscape Program.

Regulatory Measure I.2-8: Additional lighting shall be installed where appropriate, including on the Project site and in parking garages, as determined in consultation with the LAPD with regard to the five development parcels and the County Office of Public Safety with regard to the Civic Park. The Developer shall implement this measure with regard to the five development parcels prior to initial building occupancy for each construction phase, while the responsible parties for the implementation of the Civic Park and Streetscape Program under the applicable agreements shall implement these measures prior to the completion of construction for each of those Project components.

Regulatory Measure I.2-9: Prior to the start of each construction phase, the Developer, with regard to the five development parcels, and the responsible parties for implementation of the Civic Park and Streetscape Program under the applicable agreements, shall prepare, and thereafter implement, a plan that incorporates safety features \ into the Project's design to assure pedestrian safety, assist in controlling pedestrian traffic flows, and avoid pedestrian/vehicular conflicts on-site. Safety measures may include the provision of security personnel; clearly designated, well-lighted pedestrian walkways on-site; special street and pedestrian-level lighting; physical barriers (e.g., low walls, landscaping), particularly around the perimeter of the parking garages, to direct pedestrians to specific exit locations that correspond to designated crosswalk locations on adjacent streets. The LAPD shall determine compliance with this measure with regard to the five development parcels. The County Office of Public Safety shall determine compliance with this measure with regard to the Civic Park.

Regulatory Measure I.2-10: Prior to the issuance of a certificate of occupancy for each construction phase and during Project operations, the Developer, with regard to the five development parcels, shall develop, and thereafter implement, a new or modified Security Plan to minimize the potential for on-site crime and the need for LAPD services. The plan would outline the security services and features to be implemented, as determined in consultation with the LAPD. The LAPD shall determine compliance with this measure with regard to the five development parcels. The following shall be included in the plan:

a. Provision of an on-site security force that would monitor and patrol the Project site. During operational hours, security officers shall perform pedestrian, vehicular, and/or bicycle patrols.

b. Implementation of a video camera surveillance system and/or a closed-circuit television system;

c. Additional security features shall be incorporated into the design of proposed parking facilities, including "spotters" for parking areas, and ensuring the availability of sufficient parking either on- or off-site for all building employees and anticipated patrons and visitors;

d. Security lighting incorporating good illumination and minimum dead space in the design of entryways, seating areas, lobbies, elevators, service areas, and parking areas to eliminate areas of concealment. Security lighting shall incorporate full cutoff fixtures which minimize glare from the light source and provide light downward and inward to structures to maximize visibility;

e. Provision of lockable doors at appropriate Project entryways, offices, retail stores, and restaurants;

f. Installation of alarms at appropriate Project entryways and ancillary commercial structures;

g. All businesses desiring to sell or allow consumption of alcoholic beverages are subject to the issuance of a Conditional Use Permit by the City;

h. Accessibility for emergency service personnel and vehicles into each structure, and detailed diagram(s) of the Project site, including access routes, unit numbers, and any information that would facilitate police response shall be provided to the Central Area Commanding Officer.

i. In addition, security procedures regarding initial response, investigation, detainment of crime suspects, LAPD notification, crowd and traffic control, and general public assistance shall be outlined in the Security Plan. The plan would be subject to review

by the LAPD, and any provisions pertaining to access would be subject to approval by the City of Los Angeles Department of Transportation.

Regulatory Measure I.2-11: Prior to the issuance of a certificate of occupancy for each construction phase and on-going during operations, the Developer, with regard to the five development parcels, and the responsible parties for implementation of the Civic Park under the applicable agreements, shall develop, and thereafter implement, a Emergency Procedures Plan to address emergency concerns and practices. The plan shall be subject to review by the LAPD with regard to the five development parcels and the County Office of Public Safety with regard to the Civic Park, and any provisions pertaining to access would be subject to approval by the City of Los Angeles Department of Transportation.

11. Schools

Mitigation Measure I.3-1: Prior to the issuance of each building permit, the Developer, with regard to the five development parcels, shall pay school mitigation fees pursuant to the provisions of California Government Code Section 65995. The City's Department of Building and Safety, or other appropriate City agency or department shall determine compliance with this measure.

12. Parks and Recreation

Mitigation Measure I.4-1: Prior to the issuance of a certificate of occupancy, the Developer, with regard to the five development parcels, shall: (1) dedicate additional parkland such that the Project would provide a total of 3 acres per 1,000 Project residents; (2) pay in-lieu fees for any land dedication requirement shortfall; or (3) a combination of the above. The City's Department of Building and Safety, or other appropriate City agency or department shall determine compliance with this measure.

13. Libraries

The Project would result in no significant impacts on library services, and no mitigation measures are

14. Water Supply

~~**Mitigation Measure J.1-1:** Prior to initial occupancy of the buildings within Parcels L and W-1/W-2, the Developer shall install new water lines along Second Street, from Olive Street to Hill Street to serve Parcels W-1/W-2, and from Hope Street to Lower Grand Avenue to serve Parcel L. The City's Department of Public Works shall review and approve all plans related to these new water lines. The Developer shall be responsible for the implementation of these improvements.~~

Regulatory Measure J.1-1: Prior to the start of each construction phase, the Developer, with regard to the five development parcels, and the responsible parties for implementation of the Civic Park and Streetscape Program under the applicable agreements, shall call DIG-ALERT to identify and mark on the ground surface the locations of existing underground utilities. The City's Department of Public Works, or

other appropriate City agency or department, shall determine compliance with this measure with regard to the five development parcels and the Streetscape Program. The County's CAO or its designee shall determine compliance with this measure with regard to the Civic Park.

Regulatory Measure J.1-2: Prior to the start off each construction phase, the Developer, with regard to the five development parcels, and the responsible parties for implementation of the Civic Park and Streetscape Program under the applicable agreements shall perform potholing of existing water and gas mains to verify the depth of cover. If the depth of cover over the lines is shallow and the total street pavement section is thick (around 24 inches), then the temporary cover over the lines during construction may be reduced to 12 inches or less. Under these circumstances, protective measures shall be implemented to prevent damage or breakage of the lines during the pavement sub-grade preparation process, notices of service interruption, if necessary, shall be provided to customers in accordance with DWP-Water and ACG requirements. The City's Department of Building and Safety, or other appropriate City agency or department, shall determine compliance with this measure with regard to the five development parcels and the Streetscape Program. The County's CAO or its designee shall determine compliance with this measure with regard to the Civic Park.

Regulatory Measure J.1-3: Prior to issuance of building permits for each construction phase, the Developer, with regard to the five development parcels, shall pay the appropriate fees as may be imposed by the City's Department of Building and Safety, or other appropriate City agency or department. A percentage of building permit fees is contributed to the fire hydrant fund, which provides for citywide fire protection improvements. Compliance with this measure shall be determined by the City's Department of Building and Safety, or other appropriate City agency or department.

Regulatory Measure J.1-4: Prior the issuance of building permits for each construction phase, the Developer, with regard to the five development parcels and the responsible parties for implementation of the Civic Park Plan under the applicable agreements, shall coordinate with the Los Angeles Department of Water and Power to conduct a flow test to confirm that the existing water system meets fire flow requirements imposed by the LAFD for the Project. The Developer, with regard to the five development parcels and the responsible parties for implementation of the Civic Park Plan under the applicable agreements, shall undertake and complete required improvements as identified by the LADWP, based on the findings of the flow test. The City's Department of Public Works, or other appropriate City agency or department, shall determine compliance with this measure with regard to the five development parcels. The County's CAO or its designee shall determine compliance with this measure with regard to the Civic Park.

Regulatory Measure J.1-5: During Project operations, the Developer, with regard to the five development parcels, shall incorporate Phase I of the City of Los Angeles' Emergency Water Conservation Plan into all privately operated parcels. The Plan prohibits hose watering of driveways and associated walkways, mandates decorative fountains to use recycled water, mandates drinking water in restaurants to be served upon request only, and provides that water leaks are repaired in a timely manner.

The City's Department of Public Works, or other appropriate City agency or department, shall determine compliance with this measure.

~~**Regulatory Measure J.1-6:** During Project operations, incorporate Los Angeles County water conservation policies into the operation of the Civic Park, and the County Office Building, if the Project proceeds with the County office building option. The responsible parties for the implementation of the Civic Park under the applicable agreements, and the County with regard to the County Office Building, if the Project proceeds with the County office building option, shall be responsible for implementing this measure. The implementation of this measure shall be subject to the review and approval of the County's CAO or its designee.~~

Regulatory Measure J.1-7: During Project operations, the Developer, with regard to the five development parcels, and the responsible parties for implementation of the Civic Park and Streetscape Program under the applicable agreements and the County Office Building operator shall comply with any additional mandatory water use restrictions imposed as a result of drought conditions. The City's Department of Public Works, or other appropriate City agency or department, shall determine compliance with this measure with regard to the five development parcels and the Streetscape Program. The County's CAO or its designee shall determine compliance with this measure with regard to the Civic Park.

Regulatory Measure J.1-8: During Project operations, the Developer, with regard to the five development parcels, and the responsible parties for implementation of the Civic Park and Streetscape Program under the applicable agreements, shall install automatic sprinkler systems to irrigate landscaping during morning hours or during the evening to reduce water losses from evaporation, and sprinklers shall be reset to water less often in cooler months and during the rainfall season so that water is not wasted by excessive landscape irrigation. The City's Department of Public Works, or other appropriate City agency or department, shall determine compliance with this measure with regard to the five development parcels and the Streetscape Program. The County's CAO or its designee shall determine compliance with this measure with regard to the Civic Park.

15. Wastewater

Regulatory Measure J.2-1: Prior to the start of each construction phase, the Developer, with regard to the five development parcels, and the responsible parties for implementation of the Civic Park shall comply with City ordinances limiting connections to the City sewer system, in accordance with City Bureau of Sanitation procedures. The City's Department of Public Works, Sanitation Bureau, or other appropriate City agency or department, shall determine compliance with this measure with regard to the five development parcels. The County's CAO or its designee shall ensure compliance with this measure.

Regulatory Measure J.2-2: Prior to the start of each construction phase, the Developer, with regard to the five development parcels, and the responsible parties for implementation of the Civic Park Plan, shall

prepare and, thereafter, implement building plan specifications for the installation of low-flow water fixtures and further encourage reduction of water consumption to minimize wastewater flow to the sewer system, in accordance with applicable water conservation requirements. The City's Department of Building and Safety, or other appropriate City agency or department, shall determine compliance with this measure with regard to the five development parcels. The County's CAO or its designee shall ensure compliance with this measure.

16. Solid Waste

Regulatory Measure J.3-1: Prior to the issuance of a certificate of occupancy for each construction phase, and thereafter during Project operations, the Developer, with regard to the five development parcels, shall comply with the provisions of City of Los Angeles Ordinance No. 171687 with regard to all new structures constructed as part of the five development parcels. The City's Department of Building and Safety, or other appropriate City agency or department, shall determine compliance with this measure.

Regulatory Measure J.3-2: Prior to the issuance of each certificate of occupancy, the Developer, with regard to the five development parcels, and the responsible parties for implementation of the Civic Park and Streetscape Program under the applicable agreements, shall prepare, and thereafter implement, a plan that designs all structures constructed or uses established within any part of the proposed Project site to be permanently equipped with clearly marked, durable, source sorted recyclable bins at all times to facilitate the separation and deposit of recyclable materials. The City's Department of Public Works, or other appropriate City agency or department, shall determine compliance with this measure with regard to the five development parcels and the Streetscape Program. The County's CAO or its designee shall determine compliance with this measure with regard to the Civic Park.

Regulatory Measure J.3-3: Prior to the issuance of each certificate of occupancy, the Developer, with regard to the five development parcels, and the responsible parties for implementation of the Civic Park under the applicable agreements, shall prepare, and thereafter implement, a plan that designs primary collection bins to facilitate mechanized collection of such recyclable wastes for transport to on- or off-site recycling facilities. The City's Department of Building and Safety, or other appropriate City agency or department, shall determine compliance with this measure with regard to the five development parcels. The County's CAO or its designee shall determine compliance with this measure with regard to the Civic Park.

Regulatory Measure J.3-4: During Project operations, the Developer, with regard to the five development parcels, and the responsible parties for implementation of the Civic Park and Streetscape Program under the applicable agreements, shall continuously maintain in good order for the convenience of businesses, patrons, employees and park visitors clearly marked, durable and separate bins on the same lot, or parcel to facilitate the commingled recyclables and deposit of recyclable or commingled waste metal, cardboard, paper, glass, and plastic therein; maintain accessibility to such bins at all times, for

collection of such wastes for transport to on- or off-site recycling plants; and require waste haulers to utilize local or regional material recovery facilities as feasible and appropriate. The City's Department of Building and Safety, or other appropriate City agency or department, shall determine compliance with this measure with regard to the five development parcels and the Streetscape Program. The County's CAO or its designee shall determine compliance with this measure with regard to the Civic Park.

Regulatory Measure J.3-5: During each construction phase, the Developer, with regard to the five development parcels, and the responsible parties for implementation of the Civic Park and Streetscape Program under the applicable agreements, shall implement a demolition and construction debris recycling plan, with the explicit intent of requiring recycling during all phases of site preparation and building construction. The City's Department of Building and Safety, or other appropriate City agency or department, shall review and approve the plan with regard to the five development parcels and the Streetscape Program. The County's CAO or its designee shall review and approve the plan with regard to the Civic Park.

17. Conditions of Approval

COA-1 The developer shall meet on an ongoing basis with the Music Center to exchange all necessary information and formulate programs so as to best ensure that the Music Center's activities would not be significantly disrupted by the construction of the Project.

COA-2 The developer shall meet on an ongoing basis with the Los Angeles Superior Courthouse to exchange all necessary information and formulate programs so as to best ensure that the Los Angeles Superior Courthouse's activities would not be significantly disrupted by the construction of the Project.

COA-3 The developer shall meet on an ongoing basis with the Colburn School to exchange all necessary information and formulate programs so as to best ensure that the Colburn School's activities would not be significantly disrupted by the construction of the Project.

COA-4 The developer shall coordinate the construction of the Project so that the standard shift from Mondays through Fridays for the majority of the Project's construction workers shall be 7:00 A.M. to 3:30 P.M.

COA-5 The developer shall offer a transit pass to any worker who agrees to not travel to the Project site by personal vehicle and forego a space in the parking lot designated for the Project's construction workers for the duration of the phase of construction for which that worker has been hired.

EXHIBIT F

CRA-AUTHORITY NDA

SUBLESSEE'S NONDISTURBANCE AND GROUND LEASE RECOGNITION AGREEMENT

THIS SUBLESSEE'S NONDISTURBANCE AND GROUND LEASE RECOGNITION AGREEMENT (this "Agreement") is made as of December ____, 2012 by and among CRA/LA, a designated local authority ("Lessor"), THE LOS ANGELES GRAND AVENUE AUTHORITY, a California joint powers authority ("Lessee" or "Sublessor"), and GRAND AVENUE M HOUSING PARTNERS, LLC, a California limited liability company ("Sublessee").

RECITALS

A. WHEREAS, Lessor and Lessee entered into that certain Ground Lease (Parcel M-2 of the Grand Avenue Project), dated as of December ____, 2012 (the "Lease"), pursuant to which Lessor leased to Lessee, and Lessee leased from Lessor, certain real property as more fully and legally described on Exhibit A attached hereto and incorporated herein by this reference (the "Land").

B. WHEREAS, Lessee and Sublessee entered into that certain Ground Lease, dated as of December ____, 2012 (the "Sublease"), pursuant to which Lessee subleased to Sublessee, and Sublessee subleased from Sublessor, the Land;

C. WHEREAS, the Sublessee shall cause the construction of a single structure on the Land (the "Project");

D. WHEREAS, subsequent to the execution of the Lease and Sublease, and prior to completion of the Project, Sublessee shall cause the recordation of a tract map which will divide the Land into several air rights parcels (the "Tract Map"). The air rights parcels will consist of two categories: the five (5) parcels on which an affordable housing project will be located (collectively, the "Affordable Project Parcels"), and the three (3) parcels on which a market rate housing project, approximately 7,250 square feet of retail space and a parking structure will be located (collectively, the "Market Rate Project Parcels"). Concurrent with recordation of the Tract Map the Lessor, Lessee and Sublessee will enter into a Reciprocal Easement Agreement with Covenants, Conditions and Restrictions setting forth certain covenants, conditions and restrictions for the mutual and reciprocal benefit and complement of the Affordable Project Parcels and the Market Rate Project Parcels, and the present and future owners and occupants thereof (the "REA");

E. WHEREAS, following the recordation of the Tract Map and the REA, (i) Sublessee will convey Sublessee's fee interest in the improvements located on the Market Rate Project Parcels to Grand Avenue M Urban Housing, LLC, a California limited liability company (the "Market Rate Owner"); (ii) the Lessee and the Market Rate Owner will enter into a sublease for the Market Rate Project Parcels (the "Market Rate Sublease"), and by its terms the Sublease will release the Market Rate Project Parcels from the leased premises; (iii) Lessor, Lessee and the Market Rate Owner will execute a nondisturbance and ground lease recognition agreement with respect to the Market Rate Project Parcels, in the form attached hereto as Exhibit B (the

"Market Rate Parcel Recognition Agreement"); and (iv) Lessor, Lessee and Sublessee will enter into an amendment to this Agreement to amend Exhibit A hereto to delete the Market Rate Parcels, which amendment shall be in the form attached hereto as Exhibit C (the "First Amendment to Affordable Parcel Recognition Agreement"); and

F. WHEREAS, the parties desire to set forth, among other things, Lessor's consent to the Sublease, and their respective rights and obligations in the event of the termination of the Lease.

NOW, THEREFORE, in consideration of the mutual covenants contained herein, and for other good and valuable consideration, the receipt and adequacy of which is hereby acknowledged, Lessor, Lessee and Sublessee hereby agree as follows:

AGREEMENT:

1. Recognition.

(a) Lessor hereby consents to and approves the Sublease and all of the terms thereof and agrees that the exercise by Sublessee of any of its rights, remedies and options therein shall not constitute a default under the Lease.

(b) Lessor agrees that so long as the Sublease shall be in full force and effect:

(i) Sublessee shall not be named or joined as a party or otherwise in any suit, action or proceeding for the termination of the Lease, or to enforce any rights under the Lease; and

(ii) The possession by Sublessee of the Land and all improvements located thereon (collectively, the "Premises"), and Sublessee's rights thereto, and its use and enjoyment of the Premises, shall not be disturbed, affected or impaired, nor will the Sublease or the term thereof be terminated or otherwise affected by, (i) any suit, action or proceeding on the Lease, (ii) the enforcement of any rights under the Lease, including, without limitation, the termination thereof, (iii) the exercise of any other rights given Lessor as a matter of law, or (iv) any default under the Lease.

(c) Notwithstanding any contrary provision of this Agreement, Lessor shall not be: liable for any act or omission of Lessee, or obligated to cure any then-existing breach or default by Lessee, under the Sublease; subject to any offsets, defenses or claims which Sublessee may have against Lessee; liable to Sublessee for any security deposit paid to Lessee, except to the extent that such security deposit has been transferred to Lessor; bound by or required to recognize any rent or other amount that Sublessee may have paid to Lessee more than thirty (30) days in advance of the date such rent or other payment was due under the Sublease, but, for purposes of clarification, not including the Leasehold Acquisition Fee; or bound by any amendment or modification of the Sublease made without the express prior written consent of Lessor.

2. Nondisturbance. In the event that the Lease is terminated before its expiration, Lessor hereby agrees:

(a) The Sublease shall continue in full force and effect and Sublessee's possession of the Premises and its rights under the Sublease shall not be terminated, disturbed, affected or impaired; provided that (i) subject to all applicable notice and cure periods and mortgagee protections provided thereunder, Sublessee is not then in default under the Sublease; (ii) Sublessee shall attorn to and accept Lessor as its direct landlord under the Sublease for the remainder of the term under the Sublease; and (iii) Sublessee shall comply with all the terms and conditions of the Sublease, and perform all of its obligations thereunder subject to all applicable notice and cure periods;

(b) Without necessity for executing a new lease, the Sublease shall continue in full force and effect as a direct lease between Sublessee, as tenant, and Lessor, as landlord, on all of the same terms, covenants and provisions of the Sublease, and in such event Sublessee shall be bound to Lessor under all of the terms, covenants and provisions of the Sublease to be performed by sublessee thereunder, and Lessor shall be bound to Sublessee under all the terms, covenants and provisions of the Sublease to be performed by sublessor thereunder, as the same may be amended from time to time; and

3. Amendment and Subordination. Lessee agrees to execute and deliver, within fifteen (15) days of written request therefor, any and all documents reasonably necessary, in the opinion of the Title Company, to cause the subordination of this Agreement to the Tract Map and the REA. Lessee agrees to execute and deliver the First Amendment to Affordable Parcel Recognition Agreement and Market Rate Parcel Recognition Agreement to Sublessee concurrent with Lessee's delivery of the executed Market Rate Sublease in accordance with the terms of the Sublease. Upon receipt of the executed First Amendment to Affordable Parcel Recognition Agreement and Market Rate Parcel Recognition Agreement, Sublessee shall be authorized to cause the recordation of such documents in the Official Records of the County of Los Angeles.

4. Covenant Agreement. Reference is hereby made to that certain Agreement Containing Covenants Affecting Real Property in Connection with Certificate of Completion by and between Central Plants, Inc., a corporation ("CPI") and the Community Redevelopment Agency of the City of Los Angeles, California, a public body, corporate and politic, of the State of California (the predecessor in interest to CRA/LA), dated as of November 20, 1978 and recorded in the Official Records of the County of Los Angeles as Instrument No. 78-1306207 on November 22, 1978 (the "Covenant Agreement"). Pursuant to the terms of the Covenant Agreement, CRA/LA is obligated to grant CPI "non-exclusive easements for reasonably adequate routes for the construction, operation and maintenance of a circulation system for central Heating and Cooling Plant distribution lines.." (each a "Circulation Easement") within an area which includes the Land; provided, however, the agreement further provides that such easements "shall be mutually acceptable to" CPI and CRA/LA. Commencing upon execution of this Agreement, and at any time prior to termination of the both the Sublease and the Market Rate Sublease, CRA/LA hereby agrees, that CRA/LA shall not grant a Circulation Easement which would in any way affect the Land, the Affordable Project Parcels and/or the Market Rate Project Parcels, without the prior, written consent, which consent may be given or withheld in their sole and absolute discretion, of each of the Sublessee and the Market Rate Owner, and/or their respective successor and assigns.

5. Option to Terminate Under Certain Circumstances. Notwithstanding anything to the contrary contained in the Sublease, Sublessee's option to terminate the Sublease in accordance with Section 10.3 of the Sublease shall be ineffective without the prior written

consent of the Citibank, N.A., a national association, in its capacity as maker of the Senior Loan ("Senior Lender"), to such termination.

6. Amendments to the Lease. Sublessee and Senior Lender shall not be bound by, or subject to, the terms of any amendments to the Lease made without the prior written consent of the Sublessee and the Senior Lender.

7. ~~5.~~ Governing Law. This Agreement shall be governed by, and construed in accordance with, the laws of the State of California.

8. ~~6.~~ Successor and Assigns. This Agreement is binding on the parties and their successors and assigns.

9. ~~7.~~ Entire Agreement. This Agreement constitutes the entire understanding and agreement of the parties with respect to the subject matter hereof, and shall supersede and replace all prior understandings and agreements, whether verbal or in writing.

10. ~~8.~~ Amendments Only in Writing. This Agreement may not be modified, terminated or amended in any respect, except pursuant to an instrument in writing duly executed by all of the parties hereto.

11. ~~9.~~ Counterparts. This Agreement may be executed in one or more counterpart copies, and each of which executed irrespective of the date of execution and delivery, shall be deemed to be an original, and all such counterparts together shall constitute one and the same instrument.

(Signatures for this Agreement Begin on Next Page)

IN WITNESS WHEREOF, the parties hereto have executed this Agreement as of the day and year first hereinabove set forth.

LESSOR:

CRA/LA,
a designated local authority

By: _____
Name: _____
Title: _____

_____

APPROVED AS TO FORM:

_____

(*Signatures for this Agreement Continue on Next Page*)

LESSEE:

THE LOS ANGELES GRAND AVENUE AUTHORITY,
a California joint powers authority

By: _____
Name: _____
Title: _____

APPROVED AS TO FORM:

Carmen A. Trutanich
City Attorney

By: _____
Timothy J. Chung
Deputy City Attorney

APPROVED AS TO FORM:
John F. Krattli
County Counsel

By: _____
Helen S. Parker
Principal Deputy County Counsel

(*Signatures for this Agreement Continue on Next Page*)

SUBLESSEE:

GRAND AVENUE M HOUSING PARTNERS, LLC,
a California limited liability company

By: Related/Parcel M Development Co., LLC,
a California limited liability company,
its managing member

By: _____
William A. Witte, President

Exhibit A

LEGAL DESCRIPTION

Exhibit B

MARKET RATE PARCEL RECOGNITION AGREEMENT

SUBLESSEE'S NONDISTURBANCE AND GROUND LEASE RECOGNITION AGREEMENT

THIS SUBLESSEE'S NONDISTURBANCE AND GROUND LEASE RECOGNITION AGREEMENT (this "Agreement") is made as of _____ ____, 20__ by and among CRA/LA, a designated local authority ("Lessor"), THE LOS ANGELES GRAND AVENUE AUTHORITY, a California joint powers authority ("Lessee") and GRAND AVENUE M URBAN HOUSING, LLC, a California limited liability company ("Sublessee").

RECITALS

A. WHEREAS, Lessor and Lessee entered into that certain Ground Lease (Parcel M-2 of the Grand Avenue Project), dated as of December ____, 2012 (the "Lease"), pursuant to which Lessor leased to Lessee, and Lessee leased from Lessor, certain real property commonly known as "Parcel M" and located in the City of Los Angeles, County of Los Angeles, State of California (the "Land").

B. WHEREAS, concurrently herewith Lessee is executing a sublease with Sublessee (the "Sublease") for a portion of the Land, which portion is more fully and legally described on Exhibit A attached hereto and incorporated herein by this reference (the "Subleased Land").

C. WHEREAS, the parties desire to set forth, among other things, Lessor's consent to the Sublease and their respective rights and obligations in the event of the termination of the Lease.

NOW, THEREFORE, in consideration of the mutual covenants contained herein, and for other good and valuable consideration, the receipt and adequacy of which is hereby acknowledged, Lessor and Lessee hereby agree as follows:

AGREEMENT:

1. Recognition. Lessor hereby consents to and approves the Sublease and all of the terms thereof and agrees that the exercise by Sublessee of any of its rights, remedies and options therein shall not constitute a default under the Lease.

(a) Lessor agrees that so long as the Sublease shall be in full force and effect:

(i) Sublessee shall not be named or joined as a party or otherwise in any suit, action or proceeding for the termination of the Lease, or to enforce any rights under the Lease; and

(ii) The possession by Sublessee of the Subleased Land and all improvements located thereon (collectively, the "Premises"), and Sublessee's rights thereto, and

its use and enjoyment of the Premises, shall not be disturbed, affected or impaired, nor will the Sublease or the term thereof be terminated or otherwise affected by, (i) any suit, action or proceeding on the Lease, (ii) the enforcement of any rights under the Lease, including, without limitation, the termination thereof, (iii) the exercise of any other rights given Lessor as a matter of law, or (iv) any default under the Lease.

(b) Notwithstanding any contrary provision of this Agreement, Lessor shall not be: liable for any act or omission of Lessee, or obligated to cure any then-existing breach or default by Lessee, under the Sublease; subject to any offsets, defenses or claims which Sublessee may have against Lessee; liable to Sublessee for any security deposit paid to Lessee, except to the extent that such security deposit has been transferred to Lessor; bound by or required to recognize any rent or other amount that Sublessee may have paid to Lessee more than thirty (30) days in advance of the date such rent or other payment was due under the Sublease, but, for purposes of clarification, not including the Leasehold Acquisition Fee; or bound by any amendment or modification of the Sublease made without the express prior written consent of Lessor.

2. Nondisturbance. In the event that the Lease is terminated before its expiration, Lessor hereby agrees:

(a) The Sublease shall continue in full force and effect and Sublessee's possession of the Premises and its rights under the Sublease shall not be terminated, disturbed, affected or impaired; provided that (i) subject to all applicable notice and cure periods and mortgagee protections provided thereunder, Sublessee is not then in default under the Sublease; (ii) Sublessee shall attorn to and accept Lessor as its direct landlord under the Sublease for the remainder of the term under the Sublease; and (iii) Sublessee shall comply with all the terms and conditions of the Sublease, and perform all of its obligations thereunder subject to all applicable notice and cure periods;and

(b) Without necessity for executing a new lease, the Sublease shall continue in full force and effect as a direct lease between Sublessee, as tenant, and Lessor, as landlord, on all of the same terms, covenants and provisions of the Sublease, and in such event Sublessee shall be bound to Lessor under all of the terms, covenants and provisions of the Sublease to be performed by sublessee thereunder, and Sublessor shall be bound to Sublessee under all the terms, covenants and provisions of the Sublease to be performed by sublessor thereunder, as the same may be amended from time to time.

3. Option to Terminate Under Certain Circumstances. Notwithstanding anything to the contrary contained in the Sublease, Sublessee's option to terminate the Sublease in accordance with Section [ ] of the Sublease shall be ineffective without the prior written consent of the Citibank, N.A., a national association, in its capacity as maker of the Senior Loan (the "Senior Lender"), to such termination.

4. Amendments to the Lease. Sublessee and Senior Lender shall not be bound by, or subject to, the terms of any amendments to the Lease made without the prior written consent of the Sublessee and the Senior Lender.

5. ~~3.~~ Governing Law. This Agreement shall be governed by, and construed in accordance with, the laws of the State of California.

6. ~~4.~~ Successor and Assigns. This Agreement is binding on the parties and their successors and assigns.

7. ~~5.~~ Entire Agreement. This Agreement constitutes the entire understanding and agreement of the parties with respect to the subject matter hereof, and shall supersede and replace all prior understandings and agreements, whether verbal or in writing.

8. ~~6.~~ Amendments Only in Writing. This Agreement may not be modified, terminated or amended in any respect, except pursuant to an instrument in writing duly executed by all of the parties hereto.

9. ~~7.~~ Counterparts. This Agreement may be executed in one or more counterpart copies, and each of which executed irrespective of the date of execution and delivery, shall be deemed to be an original, and all such counterparts together shall constitute one and the same instrument.

(*signatures for this Agreement begin on next page*)

IN WITNESS WHEREOF, the parties hereto have executed this Agreement as of the day and year first hereinabove set forth.

LESSOR:

CRA/LA,
a designated local authority

By: _____
Name: _____
Title: _____

_____

APPROVED AS TO FORM:

_____

(*Signatures for this Agreement Continue on Next Page*)

LESSEE:

THE LOS ANGELES GRAND AVENUE AUTHORITY,
a California joint powers authority

By: _____
Name: _____
Title: _____

APPROVED AS TO FORM:

Carmen A. Trutanich
City Attorney

By: _____
Timothy J. Chung
Deputy City Attorney

APPROVED AS TO FORM:
John F. Krattli
County Counsel

By: _____
Helen S. Parker
Principal Deputy County Counsel

(*Signatures for this Agreement Continue on Next Page*)

SUBLESSEE:

GRAND AVENUE M URBAN HOUSING, LLC,
a California limited liability company

By: Related California Urban Housing, LLC,
a California limited liability company,
its managing member

By: _____
William A. Witte, President

Exhibit A

LEGAL DESCRIPTION OF THE SUBLEASED LAND

Exhibit C

FIRST AMENDMENT TO SUBLESSEE'S NONDISTURBANCE AND GROUND LEASE RECOGNITION AGREEMENT

FIRST AMENDMENT TO SUBLESSEE'S NONDISTURBANCE AND GROUND LEASE RECOGNITION AGREEMENT

THIS FIRST AMENDMENT TO SUBLESSEE'S NONDISTURBANCE AND GROUND LEASE RECOGNITION AGREEMENT (this "First Amendment") is made as of _____ ____, 20__ by and among CRA/LA, a designated local authority ("Lessor"), THE LOS ANGELES GRAND AVENUE AUTHORITY, a California joint powers authority ("Lessee"), and GRAND AVENUE M HOUSING PARTNERS, LLC, a California limited liability company ("Sublessee").

RECITALS

A. WHEREAS, Lessor and Lessee entered into that certain Ground Lease (Parcel M-2 of the Grand Avenue Project), dated as of December ____, 2012 (the "Lease"), pursuant to which Lessor leased to Lessee, and Lessee leased from Lessor, certain real property commonly known as "Parcel M" and located in the City of Los Angeles, County of Los Angeles, State of California (the "Land").

B. WHEREAS, Lessee and Sublessee entered into that certain Ground Lease, dated as of December ____, 2012 (the "Sublease"), pursuant to which Lessee subleased to Sublessee, and Sublessee subleased from Sublessor, the Land;

C. WHEREAS, Lessor, Lessee and Sublessee entered into that certain Sublessee's Nondisturbance and Ground Lease Recognition Agreement dated as of December ____, 2012 and recorded on December ____, 2012 as Instrument No. _____, in the Official Records of Los Angeles County, State of California, in which, among other things, Lessor provided its consent to the Sublease and the parties set forth their respective rights and obligations in the event of the termination of the Lease (the "Nondisturbance and Recognition Agreement");

D. WHEREAS, the Sublessee has commenced construction of a single structure on the Land (the "Project");

E. WHEREAS, the Sublessee has subdivided the Land into multiple legal parcels, and has recorded that certain Parcel Map _____ in Official Records on _____, 201__, in Book ____, Page ____ (the "Parcel Map"). The Parcel Map includes a new legal description for each of the new separate legal parcels, which new legal description is attached hereto as Exhibit A. Parcels _____ of the Parcel Map are the "Market Rate Project Parcels," upon which two hundred fifteen (215) units of market rate rental housing, approximately 7,250 square feet of indoor and outdoor retail space and a parking structure will be located. Parcels _____ of the Parcel Map are the "Affordable Project Parcels," upon which fifty-six (56) units of affordable rental housing (including one manager's unit) will be located;

F. WHEREAS, effective as of the date hereof, the Sublease, by its terms, has released the Market Rate Project Parcels from its definition of Premises (the "Release");

Sublessee has conveyed fee title interest in the Market Rate Improvements to Grand Avenue M Urban Housing, LLC, a California limited liability company (the "Market Rate Owner"); and the Lessee and the Market Rate Owner have entered into a sublease for the Market Rate Project Parcels; and

G. WHEREAS, the parties hereto have agreed to execute this First Amendment in connection with the Release, in order to amend the legal description attached to the Nondisturbance and Recognition Agreement.

NOW, THEREFORE, in consideration of the mutual covenants contained herein, and for other good and valuable consideration, the receipt and adequacy of which is hereby acknowledged, Lessor, Lessee and Sublessee hereby agree as follows:

1. Exhibit A of the Nondisturbance and Recognition Agreement is hereby deleted and replaced with the following:

[*insert legal description for Affordable Project Parcels*]

2. This First Amendment shall be interpreted in accordance with and governed in all respects by the laws of the State of California.

3. If any provision or part of any provision of this First Amendment is for any reason held to be invalid, unenforceable, or contrary to any public policy, law, statute, and/or ordinance, the remainder of this First Amendment shall not be affected thereby and shall remain valid and fully enforceable.

4. This First Amendment, and each of its terms, may not be altered, amended, or modified in any respect, except by a writing duly executed by the party to be charged. All prior agreements and understandings, whether oral or in writing, are expressly superseded hereby and are of no further force or effect.

5. To the extent that the effectuation of any part of the First Amendment requires any party hereto to execute any further documentation or take any further actions, each party agrees to execute and deliver such other and further documents and to timely take such actions as may be required to carry out the terms of the First Amendment.

6. The provisions of this First Amendment shall be binding upon and inure to the benefit of the parties hereto and their respective heirs, executors, administrators, successors and assigns.

7. This First Amendment may be executed in counterparts, each of which shall be an original and all of which shall constitute one agreement.

8. This First Amendment and the terms and conditions contained herein shall be effective upon the recording thereof.

(*Signatures for this First Amendment Begin on Next Page*)

IN WITNESS WHEREOF, the parties hereto have executed this Agreement as of the day and year first hereinabove set forth.

LESSOR:

CRA/LA,
a designated local authority

By: _____
Name: _____
Title: _____

_____

APPROVED AS TO FORM:

_____

(*Signatures for this First Amendment Continue on Next Page*)

LESSEE:

THE LOS ANGELES GRAND AVENUE AUTHORITY,
a California joint powers authority

By: _____
Name: _____
Title: _____

APPROVED AS TO FORM:

Carmen A. Trutanich
City Attorney

By: _____
Timothy J. Chung
Deputy City Attorney

APPROVED AS TO FORM:
John F. Krattli
County Counsel

By: _____
Helen S. Parker
Principal Deputy County Counsel

(*Signatures for this First Amendment Continue on Next Page*)

SUBLESSEE:

GRAND AVENUE M HOUSING PARTNERS, LLC,
a California limited liability company

By: Related/Parcel M Development Co., LLC,
a California limited liability company,
its managing member

By: _____
William A. Witte, President

EXHIBIT A

LEGAL DESCRIPTION

[*includes both the affordable and market rate parcels*]

EXHIBIT G

SAMPLE FIRST SALE PROFIT CALCULATIONS

JPA FIRST SALE PROFIT PAYMENT RENT
Parcel M - Grand Avenue
Related California

*****EXAMPLE CALCULATION FOR ILLUSTRATIVE PURPOSES ONLY*****

Stabilized Year of Disposition		**Year 10**	**Year 15**	**Year 20**
Projected Net Operating Income		$12,294,009	$17,057,476	$23,505,515
Exit Capitalization Rate		5.00%	5.00%	5.00%
Gross Sale Proceeds		$245,880,187	$341,149,525	$470,110,297
Less: Closing Costs		2.00%	2.00%	2.00%
Net Sale Proceeds		$240,962,583	$334,326,535	$460,708,091
Less: Senior Debt		(95,430,217)	(95,430,217)	(95,430,217)
Less: CRA/LA Loan Accrued Interest		(2,296,325)	(3,185,224)	(4,074,124)
Cash Flow from Disposition		**$143,236,041**	**$235,711,093**	**$361,203,749**
20% IRR Threshold Calculation				
Construction Period		26 months	26 months	26 months
Absorption Period		9 months	9 months	9 months
Operating Perid to Disposition		120 months	180 months	240 months
Total Holding Period		**155 months**	**215 months**	**275 months**
Total Holding Period		13 years	18 years	23 years
Investor Equity at Close of Financing		$20,430,217	$20,430,217	$20,430,217
20% IRR Threshold Balance at Disposition*		**$119,223,727**	**$220,666,562**	**$432,660,811**
First Sale Profit Payment Rent				
Cash Flow from Disposition		$143,236,041	$235,711,093	$361,203,749
Less: Deferred Developer Fee		0	0	0
Less: Operating Deficit Loans		0	0	0
Less: 20% IRR Threshold Balance at Disposition*		(119,223,727)	(220,666,562)	(432,660,811)
Less: Return of Leasehold Acquisition Fee		(5,220,000)	(5,220,000)	(5,220,000)
Excess Profits		**$18,792,314**	**$9,824,531**	**($76,677,062)**
Related/STRS Ohio	50.0%	$9,396,157	$4,912,265	$0
Joint Powers Authority	50.0%	$9,396,157	$4,912,265	$0

* Considers cash flow received by Investor between Close of Financing and Disposition.

Schedule 1

Phase IIB Affordable Parcels

PSOMAS

LEGAL DESCRIPTION

AFFORDABLE HOUSING

Those volumes of airspace over a portion of Airspace Parcel C of Parcel Map L.A. No. 2006-4125, in the City of Los Angeles, County of Los Angeles, State of California, as per map filed in Book 357, Pages 71 through 76, inclusive, of Parcel Maps, Records of said County, described as follows:

Parcel 1

Part A

Beginning at a point on the northwesterly line of said Parcel C distant thereon, North 37°39'24" East 48.11 feet, from the most westerly corner of said Parcel C; thence South 15°13'32" East 16.99 feet to the True Point of Beginning; thence North 37°46'28" East 40.30 feet to Point "A"; thence South 52°13'32" East 11.92 feet; thence North 37°46'28" East 3.50 feet; thence South 52°13'32" East 8.12 feet; thence South 37°46'28" West 14.78 feet; thence South 52°13'32" East 10.94 feet; thence South 37°46'28" West 29.02 feet to a line which bears South 52°13'32" East and passes through the True Point of Beginning, said point being Point "B"; thence northwesterly along said line, North 52°13'32" West 30.97 to the True Point of Beginning. Said airspace having a lower elevation of 400.83 feet and an upper elevation of 420.17 feet.

Part B

Beginning at said Point "A"; thence North 37°46'28" East 22.65 feet; thence South 52°13'32" East 47.79 feet; thence South 37°46'28" West 15.61 feet; thence North 52°13'32" West 1.50 feet; thence South 37°46'28" West 12.91 feet to Point "C"; thence North 52°13'32" West 26.26 feet to the generally northeasterly line of said Parcel 1, Part A; thence northwesterly along said northeasterly line, the following four (4) courses:

1) North 37°46'28" East 9.38 feet; thence

2) North 52°13'32" West 8.12 feet; thence

3) South 37°46'28" West 3.50 feet; thence

\\westla1\projects\grand_ave\067492\survey\legals\lgl03_afford_units.docx
November 16, 2012
JDC:grg

4) North 52°13'32" West 11.92 feet to said Point "A". Said airspace having a lower elevation of 400.83 feet and an upper elevation of 410.50 feet.

Parcel 2

Beginning at Point "B", thence South 52°13'32" East 85.17 feet to the True Point of Beginning; thence North 37°46'28" East 2.39 Feet; thence North 52°13'32" West 0.85 feet; thence North 37°46'28" East 12.40 feet; thence South 52°13'32" East 1.07 feet; thence North 37°46'28" East 14.24 feet; thence South 52°13'32" East 23.36 feet; thence South 37°469'28" West 29.02 feet to a line which bears South 37°46'28" East and passes through said True Point of Beginning, said point also being Point "D"; thence northwesterly along said line, North 37°46'28" West 23.58 feet to the True Point of Beginning. Said airspace having a lower elevation of 400.83 feet and an upper elevation of 497.50 feet.

Parcel 3

Beginning at said Point "C", thence South 52°13'32" East 84.59 feet to the True Point of Beginning; thence North 37°46'28" East 9.78 feet; thence South 52°13'32" East 2.42 feet; thence North 37°46'28" East 18.74 feet; thence South 52°13'32" East 29.59 feet; thence South 37°46'28" West 11.83 feet; thence North 52°13'32" West 7.61 feet; thence South 37°46'28" West 16.69 feet to a line which bears South 52°13'32" East and passes through said True Point of Beginning, said point also being "Point E"; thence northwesterly along said line, North 52°13'32" West 24.40 feet to the True Point of Beginning. Said airspace having a lower elevation of 400.83 feet and an upper elevation of 410.50 feet.

Parcel 4

Beginning at said Point "E", thence South 52°13'32" East 23.83 feet to the True Point of Beginning; thence North 37°46'28" East 10.31 feet; thence South 52°13'32" East 13.19 feet; thence North 37°46'28" East 18.21 feet; thence South 52°13'32" East 16.58 feet; thence South 37°46'28" West 27.86 feet; thence North 52°13'32" West 7.54 feet; thence

South 37°46'28" West 0.66 feet to a line which bears South 52°13'32" East and passes through said True Point of Beginning; thence northwesterly along said line, North 52°13'32" West 22.23 feet to the True Point of Beginning. Said airspace having a lower elevation of 400.83 feet and an upper elevation of 497.50 feet.

Parcel 5

Part A

Beginning at said Point "D", thence South 52°13'32" East 39.25 feet to the True Point of Beginning, said point also being Point "F"; thence North 37°46'28" East 28.97 feet; thence South 52°13'32" East 27.80 feet; thence South 37°46'28" West 2.43 feet; thence South 52°13'32" East 6.03 feet; thence South 37°46'28" West 10.23 feet ; thence South 52°13'32" East 7.90 feet; thence North 37°46'28" East 6.76 feet; thence South 52°13'32" East 5.33 feet; thence North 37°46'28" East 3.21 feet; thence South 52°13'32" East 10.53 feet; thence North 37°46'28" East 0.99 feet; thence South 52°13'32" East 2.39 feet; thence South 37°46'28" West 27.27 feet to a line which bears South 52°13'32" East and passes through said Point "F"; thence northwesterly along said line, North 52°13'32" West 59.97 feet to the Point of Beginning. Said airspace having a lower elevation of 400.83 feet and an upper elevation of 497.50 feet.

Part B

Beginning at said Point "F", thence North 37°46'28" East 28.97 feet; thence South 52°13'32" East 17.19 feet to Point "G"; thence South 37°46'28" West 8.64 feet; thence South 52°13'32" East 1.52 feet; thence South 37°46'28" West 8.86 feet; thence South 52°13'32" East 5.78 feet; thence South 37°46'28" West 9.08 feet; thence South 52°13'32" East 4.51 feet; thence South 37°46'28" West 2.39 feet to a line which bears South 52°13'32" East and passes through said Point "F"; thence northwesterly along said line, North 52°13'32" West 29.00 feet to the Point of Beginning. Said airspace having a lower elevation of 497.50 feet and an upper elevation of 566.17 feet.

Part C

Beginning at said Point "G"; thence South 37°46'28" West 8.64 feet; thence South 52°13'32" East 1.52 feet; thence South 37°46'28" West 8.86 feet; thence South

52°13'32" East 5.78 feet; thence South 37°46'28" West 9.08 feet; thence South 52°13'32" East 4.51 feet; thence South 37°46'28" West 2.39 feet to a line which bears South 52°13'32" East and passes through said Point "F"; thence along the southerly prolongation of said line, South 52°13'32" East 14.95 feet; thence North 37°46'28" East 12.31 feet; thence North 52°13'32" West 4.73 feet; thence North 37°46'28" East 9.90 feet; thence North 52°13'32" West 1.94 feet; thence North 37°46'28" East 6.76 feet to line which bears South 52°13'32" East and passes through said Point "G"; thence northwesterly along said line, North 52°13'32" West 20.09 feet said Point "G". Said airspace portion has a lower elevation of 516.83 feet and an upper elevation of 566.17 feet.

Said elevations are based upon National Geodetic Survey Benchmark C 1296 (PID EW6906), having an elevation of 295.40 feet (June 1995 adjustment, North American Vertical Datum 1988), described as follows: an NGS brass disk stamped "C 1296 1977", encased in 4 inch PVC pipe with cap in lawn lying 214 feet northeast from centerline intersection of Spring Street and First Street and 54 feet southeast of centerline of Spring Street.

This Legal Description is described on the accompanying "Legal Description Map – Affordable Units", is made a part hereof for reference purposes and was prepared as a convenience and is not intended for the use in the division and/or conveyance of land in violation of the Subdivision Map Act of the State of California.

PROFESSIONAL LAND SURVEYOR
JOHN CHIAPPE JR.
No. 7230
Exp. 12-31-12
STATE OF CALIFORNIA

John Chiappe Jr., PLS 7230
PSOMAS

Date: 11/16/2012

\\westla1\projects\grand_ave\067492\survey\legals\lgl03_afford_units.docx
November 16, 2012
JDC:grg

SCALE: 1" = 50'

SHEET 1 OF 4 SHEETS

LEGAL DESCRIPTION MAP
AFFORDABLE UNITS

IN THE CITY OF LOS ANGELES
COUNTY OF LOS ANGELES, STATE OF CALIFORNIA

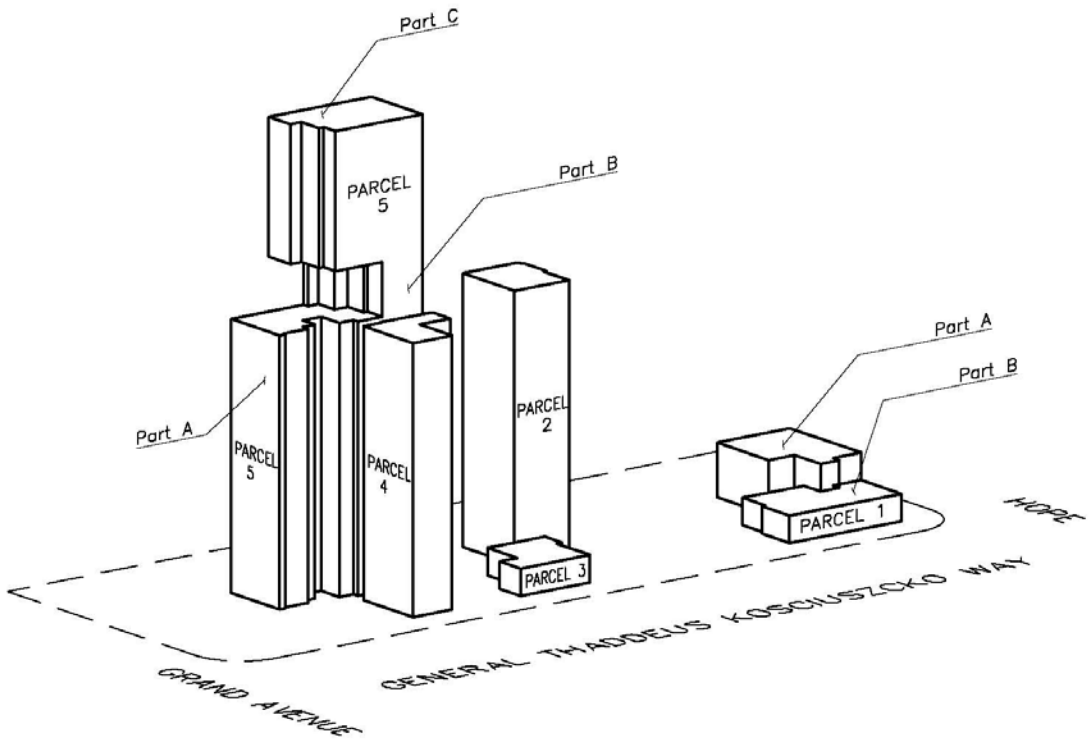

BENCHMARK: NATIONAL GEODETIC SURVEY BENCHMARK C 1296 (PID EW6906), ELEVATION = 295.40 FEET (JUNE 1995 ADJUSTMENT, NORTH AMERICAN VERTICAL DATUM 1988), DESCRIBED AS FOLLOWS: AN NGS BRASS DISK STAMPED "C 1296 1977", ENCASED IN 4 INCH PVC PIPE WITH CAP IN LAWN LYING 214 FEET NORTHEAST FROM CENTERLINE INTERSECTION OF SPRING STREET AND FIRST STREET AND 54 FEET SOUTHEAST OF CENTERLINE OF SPRING STREET.

DATE: 11/16/12 REVISED ON:
JOB No: 1REL080203 TASK 104

Plotted: 11/16/12 15:43:04 \\westlal\projects\GRAND_AVE\067492\SURVEY\LEGALS\Pltsht\PL-3LG01.dwg jchiappe

[X-LG.03-ISO]

GRAND AVENUE M HOUSING PARTNERS, LLC

PL-3LGL01

PSOMAS
555 South Flower Street, Suite 4300
Los Angeles, CA 90071
(213)223-1400 (213)223-1444 (FAX)

[schedule 1/4282.004]

SCALE: 1" = 20'

SHEET 2 OF 4 SHEETS

LEGAL DESCRIPTION MAP
AFFORDABLE HOUSING

IN THE CITY OF LOS ANGELES
COUNTY OF LOS ANGELES, STATE OF CALIFORNIA

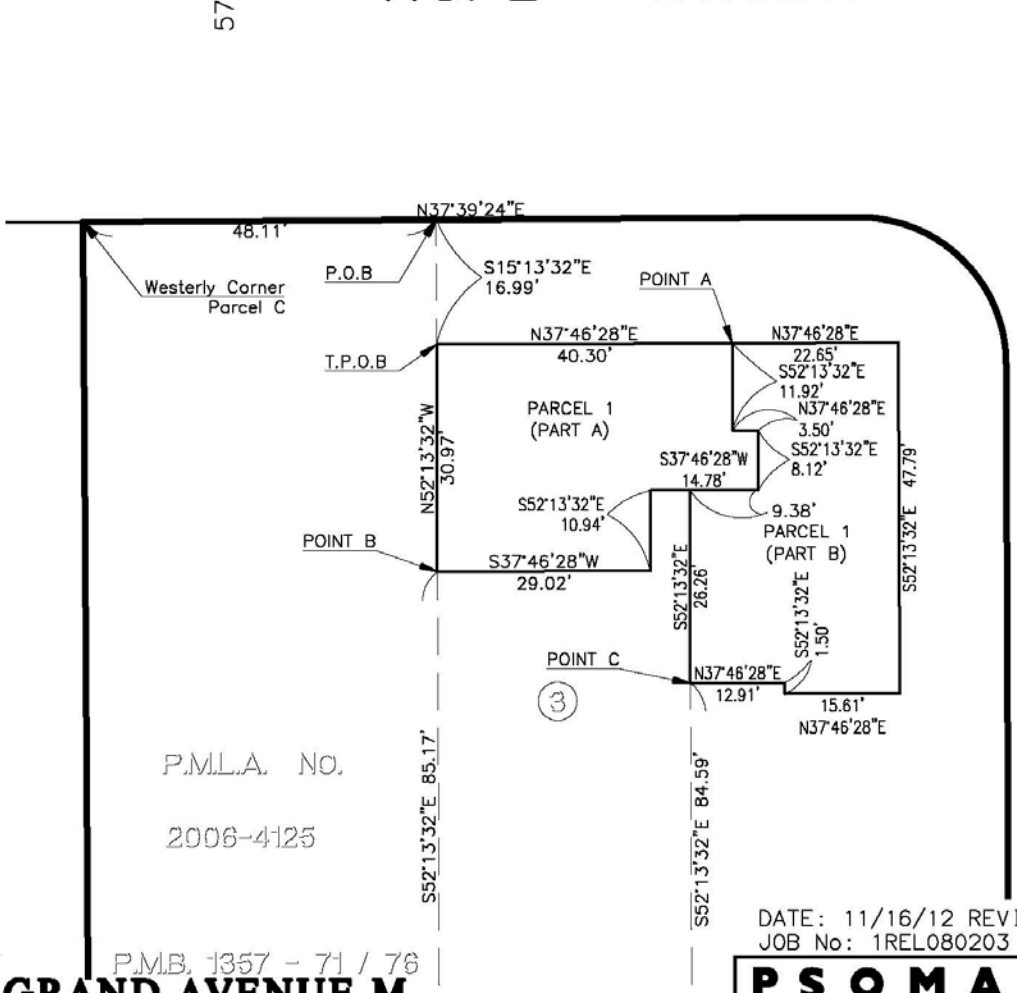

DATE: 11/16/12 REVISED ON:
JOB No: 1REL080203 TASK 104

X-LG.03

GRAND AVENUE M
HOUSING PARTNERS, LLC

PL-3LGL02

PSOMAS
555 South Flower Street, Suite 4300
Los Angeles, CA 90071
(213)223-1400 (213)223-1444 (FAX)

[schedule 1/4282.004]

SCALE: 1" = 20'

SHEET 3 OF 4 SHEETS

LEGAL DESCRIPTION MAP
AFFORDABLE HOUSING

IN THE CITY OF LOS ANGELES
COUNTY OF LOS ANGELES, STATE OF CALIFORNIA

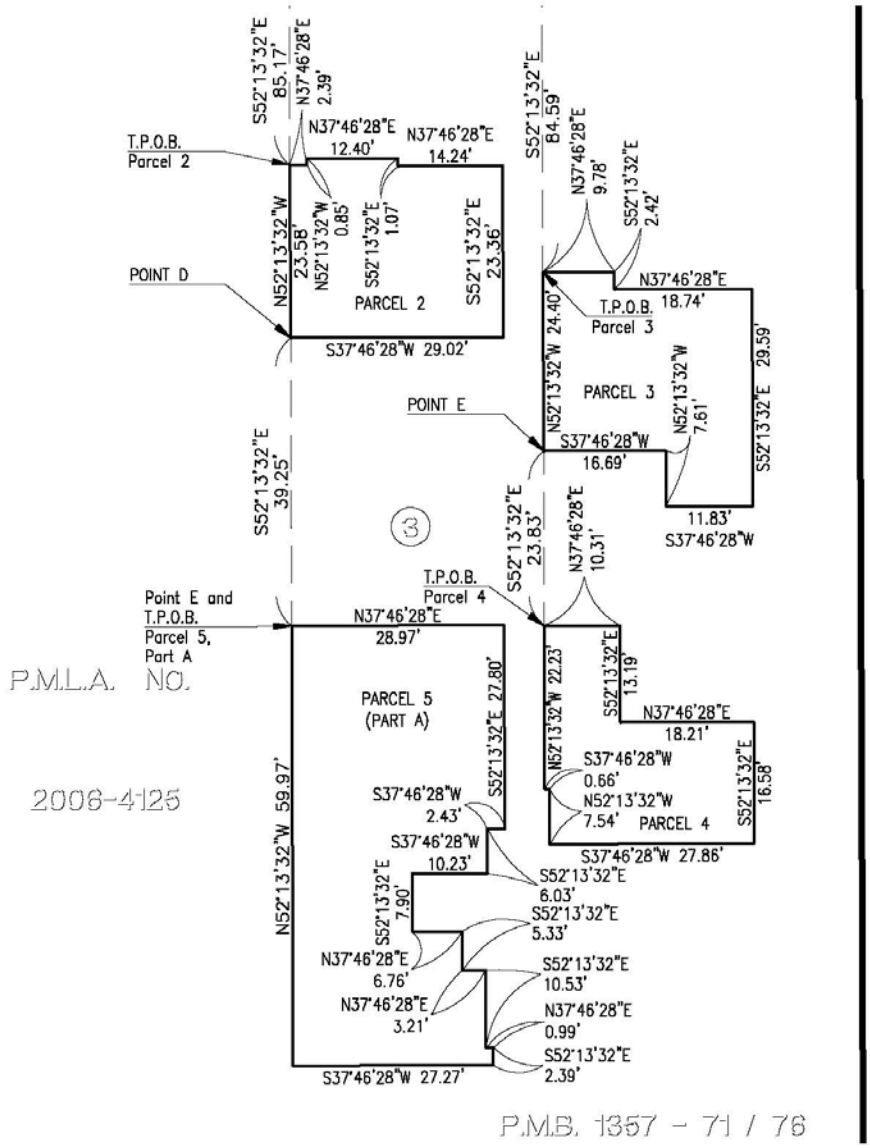

DATE: 11/16/12 REVISED ON:
JOB No: 1REL080203 TASK 104

GRAND AVENUE M HOUSING PARTNERS, LLC

PL-3LGL03

PSOMAS
555 South Flower Street, Suite 4300
Los Angeles, CA 90071
(213)223-1400 (213)223-1444 (FAX)

[schedule 1/4282.004]

SCALE: 1" = 20'

SHEET 4 OF 4 SHEETS

LEGAL DESCRIPTION MAP
AFFORDABLE HOUSING

IN THE CITY OF LOS ANGELES
COUNTY OF LOS ANGELES, STATE OF CALIFORNIA

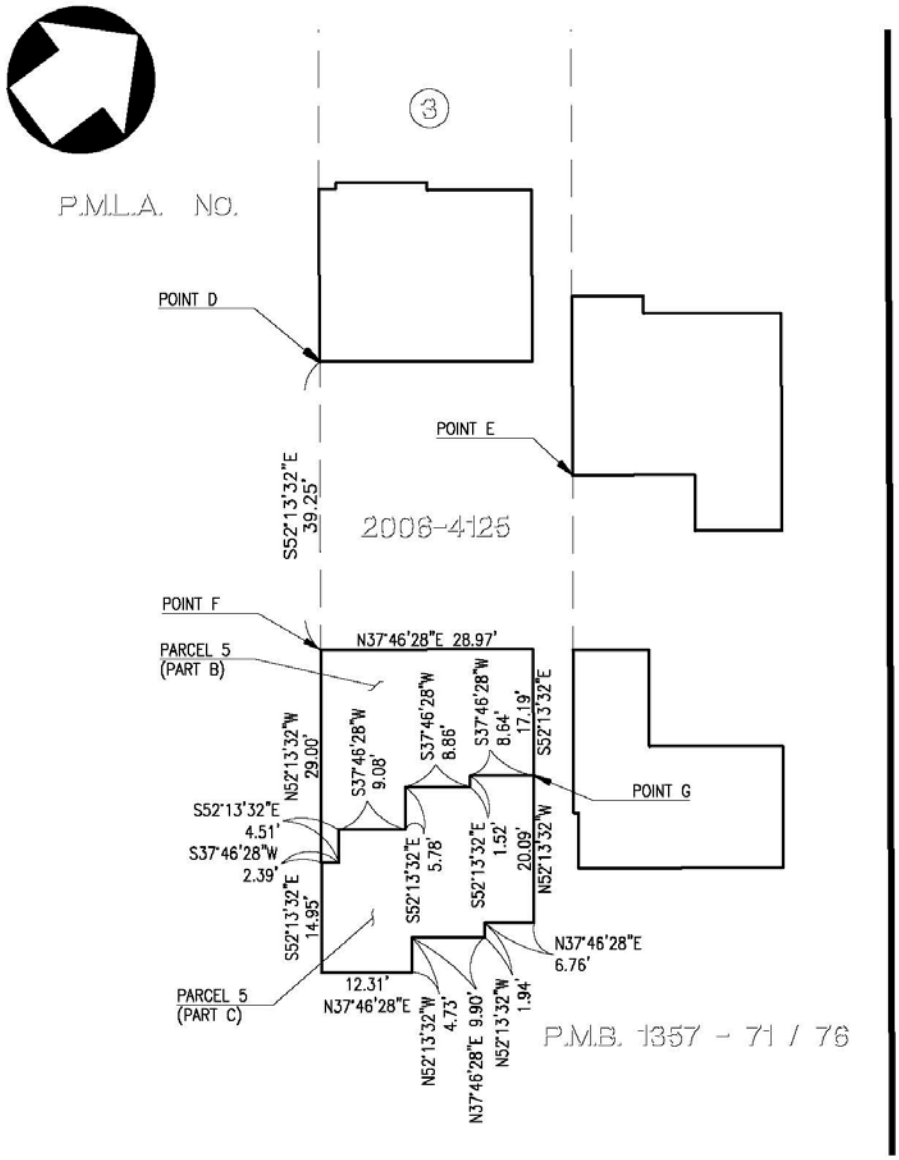

GENERAL THADDEUS KOSCIUSZCKO WAY

Plotted: 11/16/12 16:50:28 \\westla1\projects\GRAND_AVE\067492\SURVEY\LEGALS\Pltsht\PL-3LG04.dwg jchiappe

DATE: 11/16/12 REVISED ON:
JOB No: 1REL080203 TASK 104

X-LG.03

GRAND AVENUE M HOUSING PARTNERS, LLC

PL-3LGL04

PSOMAS
555 South Flower Street, Suite 4300
Los Angeles, CA 90071
(213)223-1400 (213)223-1444 (FAX)

[schedule 1/4282.004]

Schedule 2

Phase IIB Market Rate Parcels

PSOMAS

LEGAL DESCRIPTION

PARCEL M

EXCLUDING AFFORDABLE UNITS

Master Parcel A and a portion of Airspace Parcel C of Parcel Map L.A. No. 2006-4125, in the City of Los Angeles, County of Los Angeles, State of California, as per map filed in Book 357, Pages 71 through 76, inclusive, of Parcel Maps, Records of said County.

Except therefrom that portion of said Airspace Parcel C lying northeasterly of the northeasterly line of said Master Parcel A.

Also excepting therefrom the following five (5) parcels:

Parcel 1

Part A

Beginning at a point on the northwesterly line of said Parcel C distant thereon, North 37°39'24" East 48.11 feet, from the most westerly corner of said Parcel C; thence South 15°13'32" East 16.99 feet to the True Point of Beginning; thence North 37°46'28" East 40.30 feet to Point "A"; thence South 52°13'32" East 11.92 feet; thence North 37°46'28" East 3.50 feet; thence South 52°13'32" East 8.12 feet; thence South 37°46'28" West 14.78 feet; thence South 52°13'32" East 10.94 feet; thence South 37°46'28" West 29.02 feet to a line which bears South 52°13'32" East and passes through the True Point of Beginning, said point being Point "B"; thence northwesterly along said line, North 52°13'32" West 30.97 to the True Point of Beginning. Said airspace having a lower elevation of 400.83 feet and an upper elevation of 420.17 feet.

Part B

Beginning at said Point "A"; thence North 37°46'28" East 22.65 feet; thence South 52°13'32" East 47.79 feet; thence South 37°46'28" West 15.61 feet; thence North 52°13'32" West 1.50 feet; thence South 37°46'28" West 12.91 feet to Point "C"; thence North 52°13'32" West 26.26 feet to the generally northeasterly line of said Parcel 1, Part A; thence northwesterly along said northeasterly line, the following four (4) courses:

1) North 37°46'28" East 9.38 feet; thence

\\westla1\projects\grand_ave\067492\survey\legals\lgl04_less_afford_units.docx
November 16, 2012
JDC:drh

2) North 52°13'32" West 8.12 feet; thence

3) South 37°46'28" West 3.50 feet; thence

4) North 52°13'32" West 11.92 feet to said Point "A". Said airspace having a lower elevation of 400.83 feet and an upper elevation of 410.50 feet.

Parcel 2

Beginning at Point "B", thence South 52°13'32" East 85.17 feet to the True Point of Beginning; thence North 37°46'28" East 2.39 Feet; thence North 52°13'32" West 0.85 feet; thence North 37°46'28" East 12.40 feet; thence South 52°13'32" East 1.07 feet; thence North 37°46'28" East 14.24 feet; thence South 52°13'32" East 23.36 feet; thence South 37°469'28" West 29.02 feet to a line which bears South 37°46'28" East and passes through said True Point of Beginning, said point also being Point "D"; thence northwesterly along said line, North 37°46'28" West 23.58 feet to the True Point of Beginning. Said airspace having a lower elevation of 400.83 feet and an upper elevation of 497.50 feet.

Parcel 3

Beginning at said Point "C", thence South 52°13'32" East 84.59 feet to the True Point of Beginning; thence North 37°46'28" East 9.78 feet; thence South 52°13'32" East 2.42 feet; thence North 37°46'28" East 18.74 feet; thence South 52°13'32" East 29.59 feet; thence South 37°46'28" West 11.83 feet; thence North 52°13'32" West 7.61 feet; thence South 37°46'28" West 16.69 feet to a line which bears South 52°13'32" East and passes through said True Point of Beginning, said point also being "Point E"; thence northwesterly along said line, North 52°13'32" West 24.40 feet to the True Point of Beginning. Said airspace having a lower elevation of 400.83 feet and an upper elevation of 410.50 feet.

Parcel 4

Beginning at said Point "E", thence South 52°13'32" East 23.83 feet to the True Point of Beginning; thence North 37°46'28" East 10.31 feet; thence South 52°13'32" East 13.19 feet; thence North 37°46'28" East 18.21 feet; thence South 52°13'32" East 16.58 feet; thence South 37°46'28" West 27.86 feet; thence North 52°13'32" West 7.54 feet; thence South 37°46'28" West 0.66 feet to a line which bears South 52°13'32" East and passes through said

True Point of Beginning; thence northwesterly along said line, North 52°13'32" West 22.23 feet to the True Point of Beginning. Said airspace having a lower elevation of 400.83 feet and an upper elevation of 497.50 feet.

Parcel 5

Part A

Beginning at said Point "D", thence South 52°13'32" East 39.25 feet to the True Point of Beginning, said point also being Point "F"; thence North 37°46'28" East 28.97 feet; thence South 52°13'32" East 27.80 feet; thence South 37°46'28" West 2.43 feet; thence South 52°13'32" East 6.03 feet; thence South 37°46'28" West 10.23 feet ; thence South 52°13'32" East 7.90 feet; thence North 37°46'28" East 6.76 feet; thence South 52°13'32" East 5.33 feet; thence North 37°46'28" East 3.21 feet; thence South 52°13'32" East 10.53 feet; thence North 37°46'28" East 0.99 feet; thence South 52°13'32" East 2.39 feet; thence South 37°46'28" West 27.27 feet to a line which bears South 52°13'32" East and passes through said Point "F"; thence northwesterly along said line, North 52°13'32" West 59.97 feet to the Point of Beginning. Said airspace having a lower elevation of 400.83 feet and an upper elevation of 497.50 feet.

Part B

Beginning at said Point "F", thence North 37°46'28" East 28.97 feet; thence South 52°13'32" East 17.19 feet to Point "G"; thence South 37°46'28" West 8.64 feet; thence South 52°13'32" East 1.52 feet; thence South 37°46'28" West 8.86 feet; thence South 52°13'32" East 5.78 feet; thence South 37°46'28" West 9.08 feet; thence South 52°13'32" East 4.51 feet; thence South 37°46'28" West 2.39 feet to a line which bears South 52°13'32" East and passes through said Point "F"; thence northwesterly along said line, North 52°13'32" West 29.00 feet to the Point of Beginning. Said airspace having a lower elevation of 497.50 feet and an upper elevation of 566.17 feet.

Part C

Beginning at said Point "G"; thence South 37°46'28" West 8.64 feet; thence South 52°13'32" East 1.52 feet; thence South 37°46'28" West 8.86 feet; thence South 52°13'32" East 5.78 feet; thence South 37°46'28" West 9.08 feet; thence South 52°13'32" East 4.51 feet; thence South 37°46'28" West 2.39 feet to a line which bears South 52°13'32" East and

passes through said Point "F"; thence along the southerly prolongation of said line, South 52°13'32" East 14.95 feet; thence North 37°46'28" East 12.31 feet; thence North 52°13'32" West 4.73 feet; thence North 37°46'28" East 9.90 feet; thence North 52°13'32" West 1.94 feet; thence North 37°46'28" East 6.76 feet to line which bears South 52°13'32" East and passes through said Point "G"; thence northwesterly along said line, North 52°13'32" West 20.09 feet said Point "G". Said airspace portion has a lower elevation of 516.83 feet and an upper elevation of 566.17 feet.

Said elevations are based upon National Geodetic Survey Benchmark C 1296 (PID EW6906), having an elevation of 295.40 feet (June 1995 adjustment, North American Vertical Datum 1988), described as follows: an NGS brass disk stamped "C 1296 1977", encased in 4 inch PVC pipe with cap in lawn lying 214 feet northeast from centerline intersection of Spring Street and First Street and 54 feet southeast of centerline of Spring Street.

This Legal Description is described on the accompanying "Legal Description Map – Parcel M, Excluding Affordable Units", is made a part hereof for reference purposes and was prepared as a convenience and is not intended for the use in the division and/or conveyance of land in violation of the Subdivision Map Act of the State of California.

PROFESSIONAL LAND SURVEYOR
JOHN CHIAPPE JR.
No. 7230
Exp. 12-31-12
STATE OF CALIFORNIA

John Chiappe Jr., PLS 7230
PSOMAS

Date: 11/16/2012

\\westla1\projects\grand_ave\067492\survey\legals\lgl04_less_afford_units.docx
November 16, 2012
JDC:drh

SCALE: 1" = 50'

SHEET 1 OF 4 SHEETS

LEGAL DESCRIPTION MAP
PARCEL M, EXCLUDING AFFORDABLE HOUSING

IN THE CITY OF LOS ANGELES
COUNTY OF LOS ANGELES, STATE OF CALIFORNIA

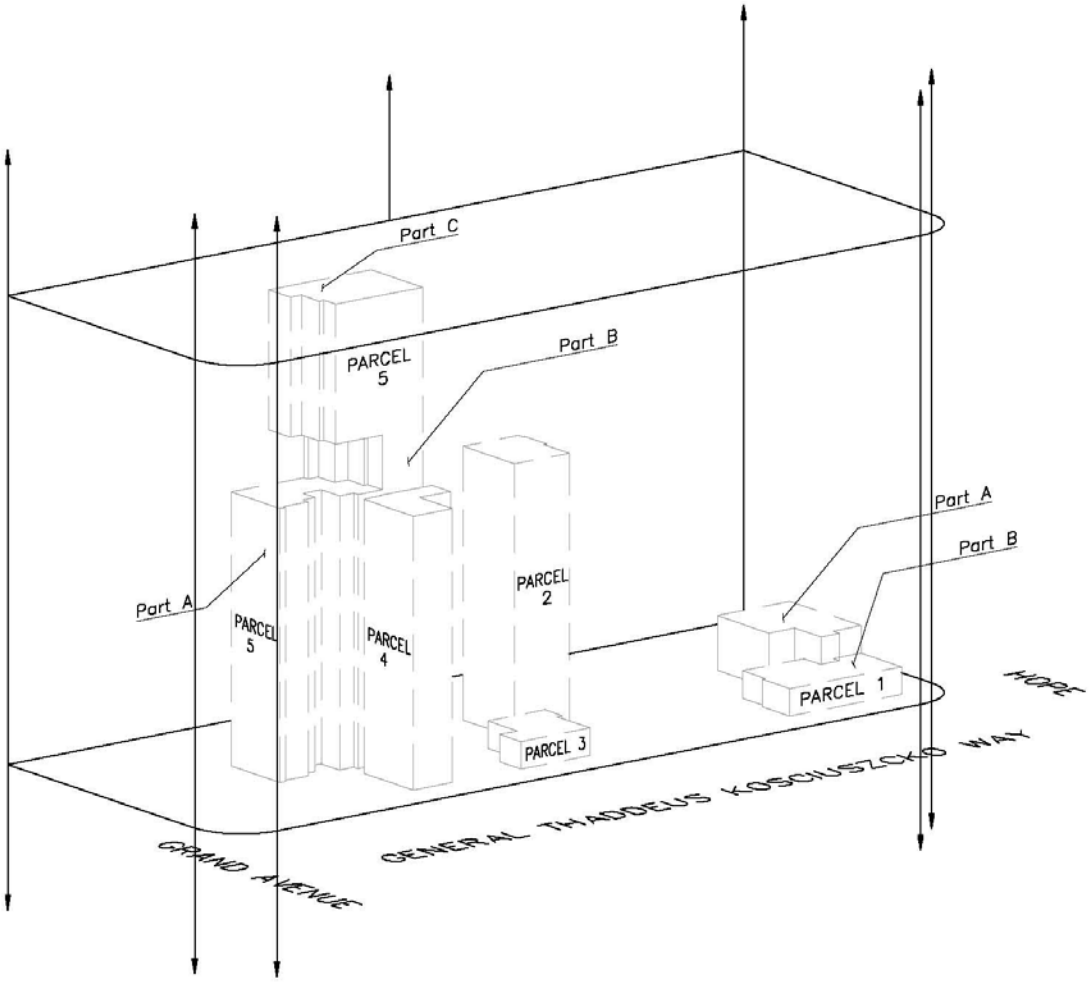

BENCHMARK: NATIONAL GEODETIC SURVEY BENCHMARK C 1296 (PID EW6906), ELEVATION = 295.40 FEET (JUNE 1995 ADJUSTMENT, NORTH AMERICAN VERTICAL DATUM 1988), DESCRIBED AS FOLLOWS: AN NGS BRASS DISK STAMPED "C 1296 1977", ENCASED IN 4 INCH PVC PIPE WITH CAP IN LAWN LYING 214 FEET NORTHEAST FROM CENTERLINE INTERSECTION OF SPRING STREET AND FIRST STREET AND 54 FEET SOUTHEAST OF CENTERLINE OF SPRING STREET.

DATE: 11/16/12 REVISED ON:
JOB No: 1REL080203 TASK 104

Plotted: 11/16/12 16:45:13 \\westlal\projects\GRAND_AVE\067492\SURVEY\LEGALS\Pitsht\PL-4LG01.dwg jchiappe

X-CG.04-ISO

GRAND AVENUE M HOUSING PARTNERS, LLC

PL-4LGL01

PSOMAS
555 South Flower Street, Suite 4300
Los Angeles, CA 90071
(213)223-1400 (213)223-1444 (FAX)

[schedule 2/4282.004]

SCALE: 1" = 20'

SHEET 2 OF 4 SHEETS

LEGAL DESCRIPTION MAP
PARCEL M, EXCLUDING AFFORDABLE HOUSING

IN THE CITY OF LOS ANGELES
COUNTY OF LOS ANGELES, STATE OF CALIFORNIA

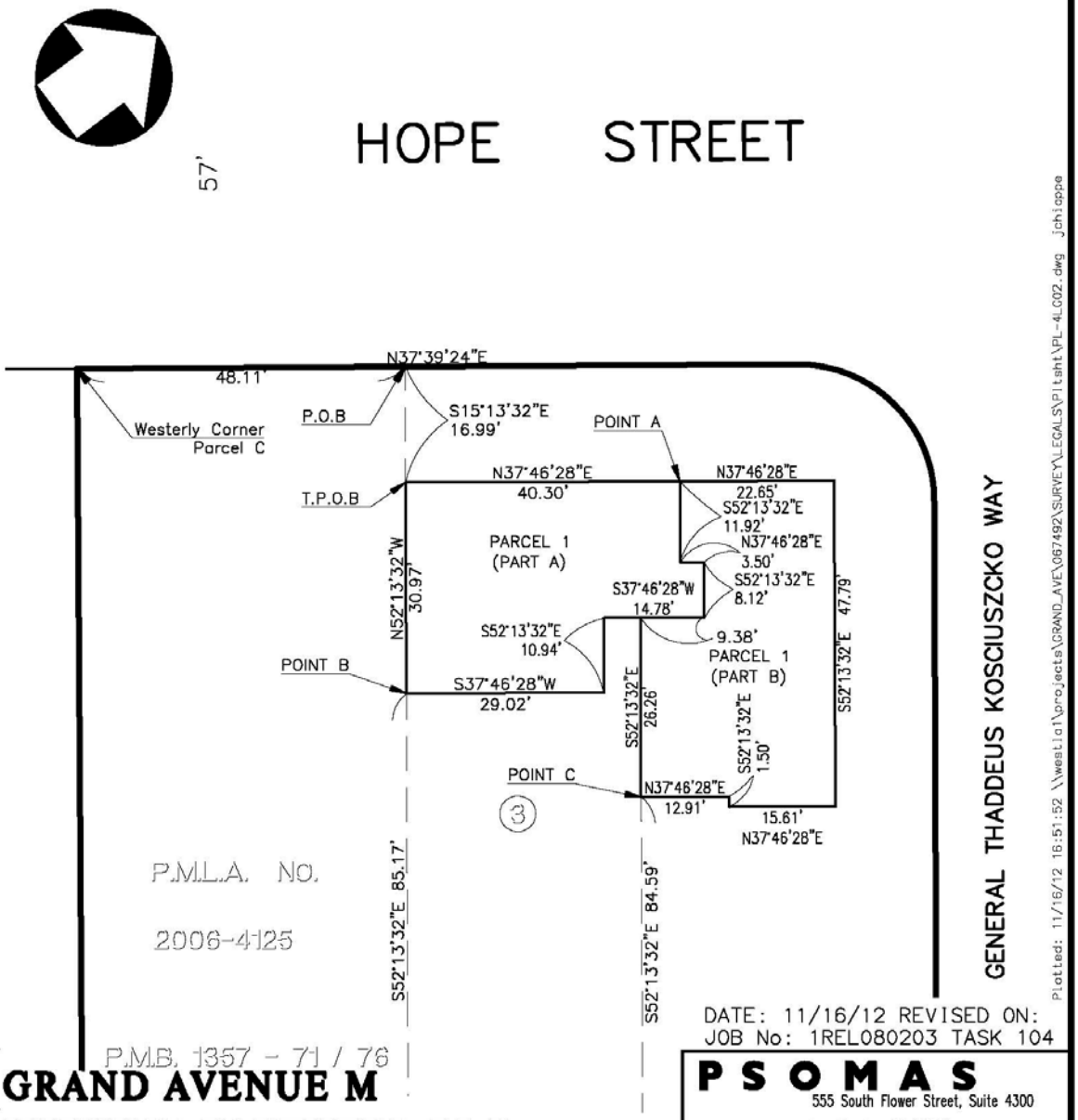

DATE: 11/16/12 REVISED ON:
JOB No: 1REL080203 TASK 104

X-LG.03

GRAND AVENUE M
HOUSING PARTNERS, LLC

PL-4LGL02

PSOMAS
555 South Flower Street, Suite 4300
Los Angeles, CA 90071
(213)223-1400 (213)223-1444 (FAX)

[schedule 2/4282.004]

SCALE: 1" = 20'

SHEET 3 OF 4 SHEETS

LEGAL DESCRIPTION MAP
PARCEL M, EXCLUDING AFFORDABLE HOUSING

IN THE CITY OF LOS ANGELES
COUNTY OF LOS ANGELES, STATE OF CALIFORNIA

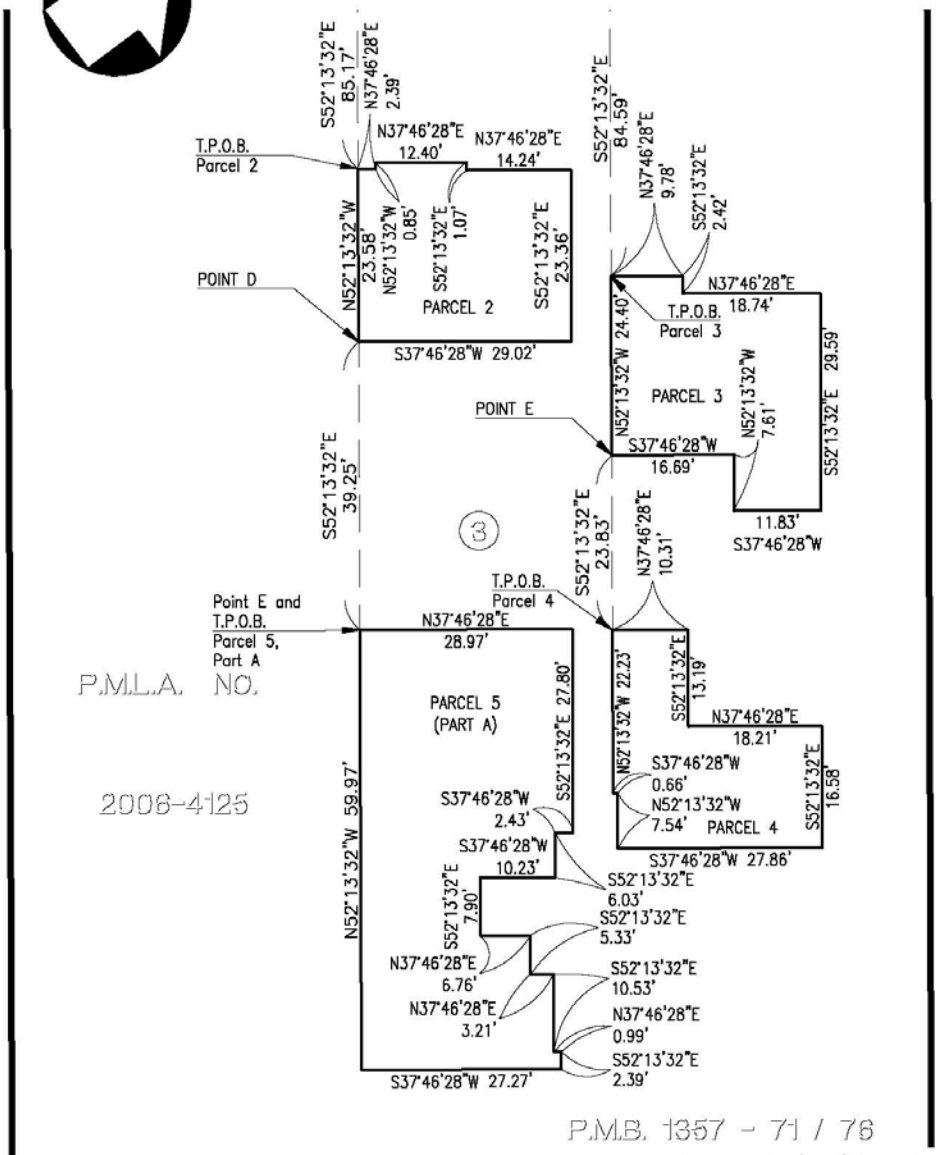

DATE: 11/16/12 REVISED ON:
JOB No: 1REL080203 TASK 104

GRAND AVENUE M HOUSING PARTNERS, LLC

PL-4LGL03

PSOMAS
555 South Flower Street, Suite 4300
Los Angeles, CA 90071
(213)223-1400 (213)223-1444 (FAX)

Plotted: 11/16/12 16:53:13 \\westial\projects\GRAND_AVE\067492\SURVEY\LEGALS\Pitsht\PL-4LG03.dwg jchiappe

[schedule 2/4282.004]

SCALE: 1" = 20'

SHEET 4 OF 4 SHEETS

LEGAL DESCRIPTION MAP
PARCEL M, EXCLUDING AFFORDABLE HOUSING

IN THE CITY OF LOS ANGELES
COUNTY OF LOS ANGELES, STATE OF CALIFORNIA

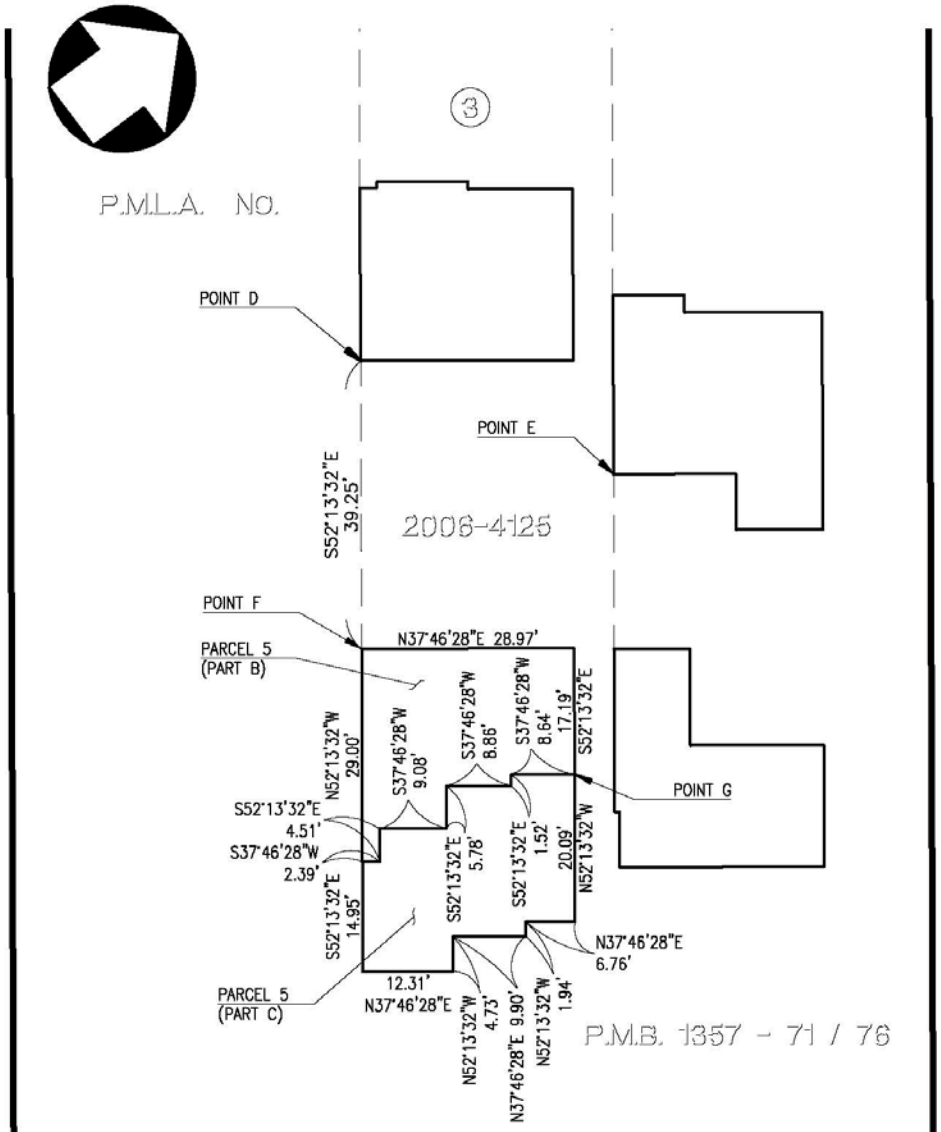

GENERAL THADDEUS KOSCIUSZCKO WAY

Plotted: 11/16/12 16:54:37 \\westla1\projects\GRAND_AVE\067492\SURVEY\LEGALS\Pltsht\PL-4LG04.dwg jchiappe

DATE: 11/16/12 REVISED ON:
JOB No: 1REL080203 TASK 104

X-LG.03

GRAND AVENUE M HOUSING PARTNERS, LLC

PL-4LGL04

PSOMAS
555 South Flower Street, Suite 4300
Los Angeles, CA 90071
(213)223-1400 (213)223-1444 (FAX)

[schedule 2/4282.004]

Schedule 3

Project Documents

DOCUMENT APPROVALS	
Schematic Design Drawings	
9-15-11	CRA/LA Board approval
9-20-11	County BOS approval
9-26-11	JPA Board approval
5-4-12	JPA approves Arquitectonica as project architect (clean up action)
Design Development Drawings	
3-28-12	CRA/LA approval
80% Construction Documents	
6-6-12	CRA/LA conditional approval
Final Construction Documents	
11-21-12	CRA/LA conditional approval

Note: Joint Powers Authority delegated design and construction drawing approval authority to CRA/LA staff at their September 2011 meeting. Therefore, all approvals, with the exception of the selection of architect were done at an administrative level after October 2011.

OFFICIAL BUSINESS

Document entitled to free
recording per Government
Code Section 27383

Recording Requested by and
When Recorded Mail to:

Los Angeles Grand Avenue Authority
c/o County of Los Angeles
Chief Executive Office
500 West Temple Street
Los Angeles, CA 90012
Attn: Chief Administrative Officer

SPACE ABOVE THIS LINE FOR RECORDER'S USE

DEED OF TRUST, SECURITY AGREEMENT
AND FIXTURE FILING (WITH ASSIGNMENT OF RENTS)
(Grand Avenue-Phase IIB)

This Deed of Trust, Security Agreement and Fixture Filing (With Assignment of Rents) is made as of _____, 2012, by GRAND AVENUE M HOUSING PARTNERS, LLC, a California limited liability company (in this Deed of Trust hereafter referred to as "Trustor"), to OLD REPUBLIC TITLE COMPANY (in this Deed of Trust hereafter called "Trustee"), for the benefit of THE LOS ANGELES GRAND AVENUE AUTHORITY, a California joint powers authority (in this Deed of Trust hereafter called "Beneficiary"), whose address is set forth above.

Witnesseth: That Trustor IRREVOCABLY GRANTS, TRANSFERS AND ASSIGNS to Trustee, its successors and assigns, in Trust, with POWER OF SALE TOGETHER WITH RIGHT OF ENTRY AND POSSESSION the following property (the "Trust Estate"):

(a) The Trustor's subleasehold interest in that certain real property in the City of Los Angeles, County of Los Angeles, State of California more particularly described in Exhibit A attached hereto and by this reference made a part hereof (such interest in real property is hereafter referred to as the "Subject Property");

(b) All buildings, structures and other improvements now or in the future located or to be constructed on the Subject Property (the "Improvements");

(c) all tenements, hereditaments, appurtenances, privileges, franchises and other rights and interests now or in the future benefitting or otherwise relating to the Subject Property or the Improvements, including easements, rights-of-way and development rights (the "Appurtenances"). (The Appurtenances, together with the Subject Property and the Improvements, are hereafter referred to as the "Real Property");

(d) subject to the assignment to Beneficiary set forth in Paragraph 4 below, all rents, issues, income, revenues, royalties and profits now or in the future payable with respect to or otherwise derived from the Trust Estate or the ownership, use, management, operation leasing or occupancy of the Trust Estate, including those past due and unpaid (the "Rents");

(e) all present and future right, title and interest of Trustor in and to all inventory, equipment, fixtures and other goods (as those terms are defined in Division 9 of the California Uniform Commercial Code (the "UCC"), and whether existing now or in the future) now or in the future located at, upon or about, or affixed or attached to or installed in, the Real Property, or used or to be used in connection with or otherwise relating to the Real Property or the ownership, use, development, construction, maintenance, management, operation, marketing, leasing or occupancy of the Real Property, including furniture, furnishings, theater equipment, seating, machinery, appliances, building materials and supplies, generators, boilers, furnaces, water tanks, heating ventilating and air conditioning equipment and all other types of tangible personal property of any kind or nature, and all accessories, additions, attachments, parts, proceeds, products, repairs, replacements and substitutions of or to any of such property, but not including personal property that is donated to Trustor (the "Goods," and together with the Real Property, the "Property"); and

(f) all present and future right, title and interest of Trustor in and to all accounts, general intangibles, chattel paper, deposit accounts, money, instruments and documents (as those terms are defined in the UCC) and all other agreements, obligations, rights and written material (in each case whether existing now or in the future) now or in the future relating to or otherwise arising in connection with or derived from the Property or any other part of the Trust Estate or the ownership, use, development, construction, maintenance, management, operation, marketing, leasing, occupancy, sale or financing of the property or any other part of the Trust Estate, including (to the extent applicable to the Property or any other portion of the Trust Estate) (i) permits, approvals and other governmental authorizations, (ii) improvement plans and specifications and architectural drawings, (iii) agreements with contractors, subcontractors, suppliers, project managers, supervisors, designers, architects, engineers, sales agents, leasing agents, consultants and property managers, (iv) takeout, refinancing and permanent loan commitments, (v) warranties, guaranties, indemnities and insurance policies, together with insurance payments and unearned insurance premiums, (vi) claims, demands, awards, settlements, and other payments

arising or resulting from or otherwise relating to any insurance or any loss or destruction of, injury or damage to, trespass on or taking, condemnation (or conveyance in lieu of condemnation) or public use of any of the Property, (vii) license agreements, service and maintenance agreements, purchase and sale agreements and purchase options, together with advance payments, security deposits and other amounts paid to or deposited with Trustor under any such agreements, (viii) reserves, deposits, bonds, deferred payments, refunds, rebates, discounts, cost savings, escrow proceeds, sale proceeds and other rights to the payment of money, trade names, trademarks, goodwill and all other types on intangible personal property of any kind or nature, and (ix) all supplements, modifications, amendments, renewals, extensions, proceeds, replacements and substitutions of or to any of such property (the "Intangibles").

Trustor further grants to Trustee and Beneficiary, pursuant to the UCC, a security interest in all present and future right, title and interest of Trustor in and to all Goods and Intangibles and all of the Trust Estates described above in which a security interest may be created under the UCC (collectively, the "Personal Property"). This Deed of Trust constitutes a security agreement under the UCC, conveying a security interest in the Personal Property to Trustee and Beneficiary. Trustee and Beneficiary shall have, in addition to all rights and remedies provided in this Deed of Trust, all the rights and remedies of a "secured party" under the UCC and other applicable California law. Trustor covenants and agrees that this Deed of Trust constitutes a fixture filing under Section 9334 and 9502(b) of the UCC.

FOR THE PURPOSE OF SECURING, in such order of priority as Beneficiary may elect, the following:

(1) Due, prompt and complete observance, performance and discharge of each and every condition, obligation, covenant and agreement contained in this Deed of Trust or contained in the following:

(a) that certain Promissory Note executed by Trustor (as of the same date as this Deed of Trust (the "Note" or the "Promissory Note");

(b) the Loan Agreement dated _____, 2012, between Trustor and Beneficiary (the "Loan Agreement");

(c) the Agreement Containing Covenants between Trustor and Beneficiary, recorded concurrently with this Deed of Trust ("Covenants"); and

(2) Payment of indebtedness of the Trustor to the Beneficiary in an original principal amount of Five Million Nine Hundred Ninety-Five Thousand Dollars ($5,995,000) (the "Loan") with interest, according to the terms of the Note.

The Note, Loan Agreement and Covenants (collectively, referred to as the "Secured Obligations") and all of their terms are incorporated in this Deed of Trust by this reference, and this conveyance shall secure any and all extensions, amendments, modifications or renewals however evidenced, and additional advances evidenced by any promissory note reciting that it is secured by this Deed of Trust. Capitalized terms used, but not defined, in this Deed of Trust, shall have the meaning set forth in the Loan Agreement.

AND TO PROTECT THE SECURITY OF THIS DEED OF TRUST, TRUSTOR COVENANTS AND AGREES:

1. That Trustor shall pay any promissory note secured by this Deed of Trust at the time and in the manner provided in such promissory note, and perform the obligations of the Trustor as set forth in the Loan Agreement and the Covenants at the time and in the manner respectively provided in the Note, the Loan Agreement and Covenants.

2. That Trustor shall not permit or suffer the use of any of the Property for any purpose other than the use for which the same was intended at the time this Deed of Trust was executed.

3. That the Secured Obligations are incorporated in and made a part of the Deed of Trust. Upon default of a Secured Obligation, and after the giving of notice and the expiration of any applicable cure period, the Beneficiary, at its option, may declare the whole of the indebtedness secured by this Deed of Trust to be due and payable.

4. That all rents, profits and income from the Property covered by this Deed of Trust are by this Deed of Trust assigned to the Beneficiary for the purpose of discharging the debt secured by this Deed of Trust. Permission is by this Deed of Trust given to Trustor so long as no default exists under this Deed of Trust, after the giving of notice and the expiration of any applicable cure period, to collect such rents, profits and income for use in accordance with the provisions of the Loan Agreement and the Covenants.

5. That upon default under this Deed of Trust or under the Loan Agreement, the Note, or the Covenants, and after the giving of notice and the expiration of any applicable cure period, Beneficiary shall be entitled to the appointment of a receiver by any court having jurisdiction, without notice, to take possession and protect the Property and operate the same and collect the rents, profits and income from the Property.

6. That Trustor will keep the improvements now existing or hereafter erected on the Property insured against loss by fire and such other hazards, casualties, and contingencies as may reasonably be required in writing from time to time by the Beneficiary, and all such insurance shall be evidenced by standard fire and extended

coverage insurance policy or policies. In no event shall the amounts of coverage be less than one hundred percent (100%) of the insurable value of the Property. Such policies shall be endorsed with standard mortgage clause with loss payable to the Beneficiary and certificates thereof together with copies of original policies shall be deposited with the Beneficiary. Unless approved otherwise in writing by the Beneficiary, Trustor shall maintain insurance as required by the Loan Agreement, which is incorporated in this Deed of Trust by this reference.

7. To pay, at least ten (10) days before delinquency, any taxes and assessments affecting the Property; to pay, when due, all encumbrances, charges and liens, with interest, on the Property or any part thereof which appear to be prior or superior hereto; and to pay all costs, fees, and expenses of this Trust. Notwithstanding anything to the contrary contained in this Deed of Trust, Trustor shall not be required to pay and discharge any such tax, assessment, charge or levy so long as Trustor is contesting its legality in good faith and by appropriate proceedings, and Trustor has adequate funds to pay any liabilities contested pursuant to this Section 7.

8. To keep the Property in good condition and repair, subject to ordinary wear and tear, casualty and condemnation, not to remove or demolish any buildings on the Property; subject to the terms of that certain subground lease between the Beneficiary, as lessor, and Trustor, as lessee (the "Ground Lease"), to complete or restore promptly and in good and workmanlike manner any building located on the Property which may be constructed, damaged, or destroyed and to pay when due all claims for labor performed and materials furnished; to comply with all laws affecting the Property or requiring any alterations or improvements to be made on the Property (subject to Trustor's right to contest the validity or applicability of laws or regulations); not to commit or permit waste; not to commit, suffer or permit any act upon the Property in violation of law and/or covenants, conditions and/or restrictions affecting the Property; not to permit or suffer any material alteration of or addition to the buildings or improvements constructed in or upon the Property after the date of this Deed of Trust without the consent of the Beneficiary.

9. To appear in and defend any action or proceeding purporting to affect the security of this Deed of Trust or the rights or powers of Beneficiary or Trustee, and to pay all costs and expenses, including cost of evidence of title and reasonable attorney's fees in a reasonable sum, in any such action or proceeding in which Beneficiary or Trustee may appear.

10. Should Trustor fail, after the giving of notice and the expiration of any applicable cure period, to make any payment or do any act as provided in this Deed of Trust, then Beneficiary or Trustee, but without obligation to do so, and without notice to or demand upon Trustor, and without releasing Trustor from any obligations, may make or do the same in such manner and to such extent as either may deem necessary to protect the security of this Deed of Trust. Following default, after the giving of notice

and the expiration of any applicable cure period, Beneficiary or Trustee being authorized to enter upon the Property for such purposes, may commence, appear in and/or defend any action or proceeding purporting to affect the security hereof or the rights or powers of Beneficiary or Trustee; may pay, purchase, contest, or compromise any encumbrance, charge, or lien which in the judgment of either appears to be prior or superior hereto; and, in exercising any such powers, may pay necessary expenses, employ counsel, and pay reasonable fees.

11. Beneficiary shall have the right to pay fire and other property insurance premiums when due should Trustor fail to make any required premium payments. All such payments made by the Beneficiary shall be added to the indebtedness and obligations secured by this Deed of Trust.

12. To pay immediately and without demand all sums so expended by Beneficiary or Trustee, under permission given under this Deed of Trust, with interest from date of expenditure at the highest non-usurious rate of interest permitted by law.

13. That upon the failure of Trustor, after the giving of notice and the expiration of any applicable cure period, to keep and perform all the covenants, conditions, and agreements of the Loan Agreement and Covenants, the entire indebtedness evidenced by any promissory note secured by this Deed of Trust shall at the option of the Beneficiary of this Deed of Trust become due and payable, regardless of anything to the contrary that is contained in this Deed of Trust.

14. Trustor further covenants that it will not voluntarily create, suffer, or permit to be created against the Property any lien or liens except as authorized by Beneficiary and further that Trustor will keep and maintain the property free from the claims of all persons supplying labor or materials which will enter into the construction of any and all buildings now being erected or to be erected on said premises. Notwithstanding anything to the contrary contained in this Deed of Trust, Trustor shall not be obligated to pay any claims for labor, materials or services which Trustor in good faith disputes and is diligently contesting, provided that Trustor shall, at Beneficiary's written request, within thirty (30) days after the filing of any claim or lien (but in any event, and without any requirement that Beneficiary must first provide a written request, prior to foreclosure) record in the Office of the County Recorder of Los Angeles County, a surety bond in the amount of such claim item to protect against a claim of lien, or provide such other security reasonably satisfactory to Beneficiary.

15. That any and all improvements made or about to be made upon the premises covered by the Deed of Trust, and all plans and specifications, comply with all applicable municipal ordinances and regulations and all other applicable regulations made or promulgated, now or hereafter, by lawful authority, and that the same will upon completion comply with all such municipal ordinances and regulations and with the

rules of the applicable fire rating or inspection organization, bureau, association or office.

16. Trustor agrees to pay to Beneficiary or to the authorized loan servicing representative of the Beneficiary a reasonable charge for providing a statement regarding the obligation secured by this Deed of Trust as provided by Section 2954, Article 2, Chapter 2 Title 14, Division 3, of the California Civil Code, or any equivalent successor statute.

IT IS MUTUALLY AGREED THAT:

17. Should the Property or any part of the Property be taken or damaged by reason of any public improvement or condemnation proceeding, or damaged by fire, or earthquake, or in any other manner, subject to the rights of any beneficiary of a deed of trust senior in priority to this Deed of Trust ("Senior Lender"), Beneficiary shall be entitled to all compensation, awards, and other payments or relief which are not used to reconstruct, restore or otherwise improve the property or part thereof that was taken or damaged, and shall be entitled at its option to commence, appear in and prosecute in its own name, any action or proceedings, or to make any compromise or settlement, in connection with such taking or damage. Subject to the rights of any Senior Lender, all such compensation, awards, damages, rights of action and proceeds which are not used to reconstruct, restore or otherwise improve the Property or part of the Property that was taken or damaged, including the proceeds of any policies of fire and other insurance affecting the Property, are by this Deed of Trust assigned to Beneficiary. After deducting all its expenses, including reasonable attorney's fees, the balance of the proceeds which are not used to reconstruct, restore or otherwise improve the Property or part of the Property that was taken or damaged, shall be applied to the amount due under any promissory note secured by this Deed of Trust. No amount applied to the reduction of the principal shall relieve the Trustor from making regular payments as required by the promissory note.

18. Upon default by Trustor in making any payments provided for in this Deed of Trust or upon default by Trustor in making any payment required in any promissory note secured by this Deed of Trust, or if Trustor shall fail to perform any covenant or agreement in this Deed of Trust within 30 days after written demand by Beneficiary (or, in the event that more than 30 days is reasonably required to cure such default, should Trustor fail to promptly commence such cure, and diligently prosecute same to completion), after the giving of notice and the expiration of any applicable cure period, Beneficiary may declare all sums secured by this Deed of Trust immediately due and payable by delivery to Trustee of written declaration of default and demand for sale, and of written notice of default and of election to cause the Property to be sold, which notice Trustee shall cause to be duly filed for record and Beneficiary may foreclose this Deed of Trust. Beneficiary shall also deposit with Trustee this Deed of Trust, the Note, and all documents evidencing expenditures secured by this Deed of Trust.

19. After the lapse of such time as may then be required by law following the recordation of said notice of default, and notice of sale having been given as then required by law, Trustee, without demand on Trustor, shall sell the Property at the time and place fixed by it in said notice of sale, either as a whole or in separate parcels, and in such order as it may determine at public auction to the highest bidder for cash in lawful money of the United States, payable at time of sale. Trustee may postpone sale of all or any portion of the Property by public announcement at the time and place of sale, and from time to time thereafter may postpone the sale by public announcement at the time and place of sale, and from time to time thereafter may postpone the sale by public announcement at the time fixed by the preceding postponement. Trustee shall deliver to the purchaser its deed conveying the property so sold, but without any covenant or warranty, express or implied. The recitals in the deed of any matters or facts shall be conclusive proof of the truthfulness thereof. Any person, including Trustor, Trustee or Beneficiary, may purchase at the sale. The Trustee shall apply the proceeds of sale to payment of (1) the expenses of such sale, together with the reasonable expenses and reasonable Trustee's fees or attorney's fees for conducting the sale, and the actual cost of publishing, recording, mailing and posting notice of the sale; (2) the cost of any search and/or other evidence of title procured in connection with such sale and revenue stamps on Trustee's deed; (3) all sums expended under the terms hereof, not then repaid, with accrued interest at the highest rate of interest permitted by law to be paid to Beneficiary; (4) all other sums then secured by this Deed of Trust; and (5) the remainder, if any, to the person or persons legally entitled thereto.

20. Beneficiary may from time to time substitute a successor or successors to any Trustee named in this Deed of Trust or acting under this Deed of Trust. Upon such appointment, and without conveyance to the successor trustee, the latter shall be vested with all title, powers, and duties conferred upon any Trustee in this Deed of Trust named or acting under this Deed of Trust. Each such appointment and substitution shall be made by written instrument executed by Beneficiary, containing reference to this Deed of Trust and its place of record, which, when duly recorded in the proper office of the county or counties in which the property is situated, shall be conclusive proof of proper appointment of the successor trustee.

21. The pleading of any statute of limitations as a defense to any and all obligations secured by this Deed of Trust is waived to the full extent permissible by law.

22. Upon written request of Beneficiary stating that all sums secured by this Deed of Trust have been paid and all obligations secured by this Deed of Trust have been satisfied, and upon surrender of this Deed of Trust to Trustee for cancellation and retention and upon payment of its fees, Trustee shall reconvey, without warranty, the property then held under this Deed of Trust. The recitals in such reconveyance of any matters or fact shall be conclusive proof of the truthfulness thereof. The grantee in

such reconveyance may be described as "the person or persons legally entitled thereto."

23. The trust created by this Deed of Trust is irrevocable by Trustor.

24. This Deed of Trust applies to, inures to the benefit of, and binds all parties hereto, their heirs, legatees, devisees, administrators, executors, successors, and assigns. The term "Beneficiary" shall include not only the original Beneficiary under this Deed of Trust but also any future owner and holder including pledgees, of any promissory note secured by this Deed of Trust. In this Deed of Trust, whenever the context so requires, the masculine gender includes the feminine and/or neuter, and the singular number includes the plural. All obligations of Trustor under this Deed of Trust are joint and several.

25. Trustee accepts this trust when this Deed of Trust, duly executed and acknowledged, is made a public record as provided by law. Except as otherwise provided by law the Trustee is not obligated to notify any party hereto of pending sale under this Deed of Trust or of any action of proceeding in which Trustor, Beneficiary, or Trustee shall be a party unless brought by Trustee.

26. The undersigned Trustor requests that a copy of any notice of default and of any notice of sale under this Deed of Trust be mailed to Trustor at the address set forth in the first paragraph of this Deed of Trust with a copy to BF Grand Avenue, LP, c/o Boston Financial Investment Management, LP, 101 Arch Street, 13th Floor, Boston, MA 02110, Attn: Asset Management – Parcel M Grand Avenue Apartments.

27. Trustor agrees at any time and from time to time upon receipt of a written request from Beneficiary, to furnish to Beneficiary detailed statements in writing of income, rents, profits, and operating expenses of the premises, and the names of the occupants and tenants in possession, together with the expiration dates of their leases and full information regarding all rental and occupancy agreements, and the rents provided for by such leases and rental and occupancy agreements, and such other information regarding the premises and their use as may be requested by Beneficiary.

28. Trustor agrees that the indebtedness secured by this Deed of Trust is made expressly for the purpose of financing the acquisition of the leasehold interest in the Property and construction of improvements thereon as provided in the Loan Agreement and to be operated as provided in the Covenants.

29. Trustor agrees that, except as otherwise provided in any promissory note secured by this Deed of Trust, upon sale or refinancing of the Property without the prior written consent of the Beneficiary, the entire indebtedness secured by this Deed of Trust shall at the option of Beneficiary be immediately due and payable. Upon the sale or refinancing of the Property with the prior written consent of the Beneficiary all accrued interest shall be due and payable.

30. Notwithstanding specific provisions of this Deed of Trust, non-monetary performance under this Deed of Trust shall not be deemed to be in default where delays or defaults are due to: war; insurrection; strikes; lock-outs; riots; floods; earthquakes; fires; casualties; acts of God; acts of the public enemy; epidemics; quarantine restrictions; freight embargoes; lack of transportation; governmental restrictions or priority; litigation; unusually severe weather; inability to secure necessary labor, materials or tools; delays of any contractor or supplier; acts of the other party; acts or failure to act of any public or governmental agency or entity; or any other causes beyond the reasonable control or without the fault of the party claiming an extension of time to perform. An extension of time for any such cause (a "Force Majeure Delay") shall be for the period of the enforced delay and shall commence to run from the time of the commencement of the cause. If, however, notice by the party claiming such extension is sent to the other party more than thirty (30) calendar days after the commencement of the cause, the period shall commence to run only thirty (30) calendar days prior to the giving of such notice. Times of performance under this Deed of Trust may also be extended in writing by the Beneficiary and Trustor. Notwithstanding the foregoing, none of the foregoing events shall constitute a Force Majeure Delay unless and until Trustor delivers to Beneficiary written notice describing the event, its cause, when and how Trustor obtained knowledge, the date the event commenced, and the estimated delay resulting therefrom. Trustor shall deliver such written notice within fifteen (15) calendar days after it obtains actual knowledge of the event.

31. If the rights and liens created by this Deed of Trust shall be held by a court of competent jurisdiction to be invalid or unenforceable as to any part of the obligations described in this Deed of Trust, the unsecured portion of such obligations shall be completely performed and paid prior to the performance and payment of the remaining and secured portion of the obligations, and all performance and payments made by Trustor shall be considered to have been performed and paid on and applied first to the complete payment of the unsecured portion of the obligations.

32. (a) Subject to the extensions of time set forth in Section 30, and subject to the further provisions of this Section 32, failure or delay by Trustor to perform any material term or provision respectively required to be performed under the Loan Agreement, the Covenants or this Deed of Trust constitutes a default under this Deed of Trust;

(b) Beneficiary shall give written notice of default to Trustor, and its investor, specifying the default complained of by the Beneficiary. Delay in giving such notice shall not constitute a waiver of any default nor shall it change the time of default.

(c) Any failures or delays by Beneficiary in asserting any of its rights and remedies as to any default shall not operate as a waiver of any default or of any

such rights or remedies. Delays by Beneficiary in asserting any of its rights and remedies shall not deprive Beneficiary of its right to institute and maintain any actions or proceedings which it may deem necessary to protect, assert, or enforce any such rights or remedies.

(d) If a monetary event of default occurs under the terms of the Loan Agreement, any promissory note secured by this Deed of Trust, the Covenants, or under this Deed of Trust, prior to exercising any remedies under this Deed of Trust Beneficiary shall give Trustor and, as applicable, each partner or member of Trustor, as the case may be, simultaneous written notice of such default. Trustor shall have a reasonable period of time after such notice is given within which to cure the default prior to exercise of remedies by Beneficiary under the Note and/or this Deed of Trust. In no event shall Beneficiary be precluded from exercising remedies if its security becomes or is about to become materially impaired by any failure to cure a default or the default is not cured within fifteen (15) calendar days after the notice of default is received or deemed received.

(e) If a non-monetary event of default occurs under the terms of the Loan Agreement, any promissory note secured by this Deed of Trust, this Deed of Trust, the Covenants or any document implementing the Loan Agreement, prior to exercising any remedies under this Deed of Trust or under such promissory note, the Loan Agreement or Covenants, Beneficiary shall give Trustor and, as applicable, each partner or member of Trustor, as the case may be, concurrent notice of such default. If the default is reasonably capable of being cured within thirty (30) calendar days after such notice is received or deemed received, Trustor shall have such period to effect a cure prior to exercise of remedies by the Beneficiary under the Loan Agreement, the Covenants, any promissory note secured by this Deed of Trust and/or this Deed of Trust. If the default is such that it is not reasonably capable of being cured within thirty (30) calendar days, and Trustor (i) initiates corrective action within said period, and (ii) diligently and in good faith works to effect a cure as soon as possible, then Trustor shall have such additional time as is reasonably necessary to cure the default prior to exercise of any remedies by Beneficiary. If Trustor fails to take corrective action or to cure the default within a reasonable time, Beneficiary shall give Trustor and, as applicable, member(s) or partner(s), as the case may be, if such person has requested in writing that Beneficiary give such person notice of default, written notice thereof, whereupon the member or partner, as the case may be, may remove and replace Trustor's managing member or managing general partner, as applicable, in accordance with the terms of Trustor's operating agreement or partnership agreement, as applicable, with a substitute managing member or partner, as the case may be, who shall effect a cure within a reasonable time in accordance with the provisions of this paragraph. In no event shall Beneficiary be precluded from exercising remedies if its security becomes or is about to become materially jeopardized by any failure to cure a default or the default is not cured within one hundred eighty (180) days after the notice of default is received or deemed received.

(f) Any notice of default that is transmitted by electronic facsimile transmission followed by delivery of a "hard" copy, shall be deemed delivered upon its transmission; any notice of default that is personally delivered (including by means of professional messenger service, courier service such as United Parcel Service or Federal Express, or by U.S. Postal Service), shall be deemed received on the documented date of receipt by Trustor; and any notice of default that is sent by registered or certified mail, postage prepaid, return receipt required shall be deemed received on the date of receipt thereof.

(g) The execution and delivery of the options described in Trustor's operating agreement or partnership agreement, as applicable, and/or in any option agreement executed at closing, shall not constitute a default under any promissory note secured by this Deed of Trust or any of the Beneficiary's Loan Documents or accelerate the maturity of the Loan secured by this Deed of Trust. No consent of Beneficiary shall be required for: (i) the exercise of said purchase option agreement by the optionee identified therein; and (ii) the assumption without penalty of Authority Loan obligations by the optionee and the release of Trustor from such obligations. The exercise of rights under such agreement shall not constitute a default or accelerate maturity of the Authority Loan.

(h) If the option described in Trustor's operating agreement or partnership agreement, as applicable, and/or in any option agreement executed at closing, is not exercised and the Property is sold subject to low-income housing use restrictions as contained in the Covenants, other existing regulatory agreement or other recorded covenant, any requisite consent of Beneficiary to the sale, and to the assumption without penalty of loan obligations by the purchaser and the release of Trustor from such obligations, shall not be unreasonably withheld.

(i) A "Permitted Transfer" as such term is defined in the Authority Loan Agreement shall not constitute a default hereunder and shall not require the consent of the Authority, other than as provided in the Authority Loan Agreement.

33. Subject to the provisions and limitations of this Section 33, the obligation to repay the Loan secured by this Deed of Trust is a nonrecourse obligation of the Trustor. Trustor and any member or partner of Trustor, as applicable, shall not have any personal liability for repayment of the Loan secured by this Deed of Trust, except as provided in this Section 33. The sole recourse of Beneficiary shall be the exercise of its rights against the Property and any related security for the Loan secured by this Deed of Trust. Provided, however, that the foregoing shall not (a) constitute a waiver of any obligation evidenced by any promissory note secured by this Deed of Trust, or this Deed of Trust; (b) limit the right of the Beneficiary to name Trustor as a party defendant in any action or suit for judicial foreclosure and sale under any promissory note secured by this Deed of Trust, and this Deed of Trust or any action or proceeding under this

Deed of Trust so long as no judgment in the nature of a deficiency judgment shall be asked for or taken against Trustor; (c) release or impair any promissory note secured by this Deed of Trust, or this Deed of Trust; (d) prevent or in any way hinder Beneficiary from exercising, or constitute a defense, an affirmative defense, a counterclaim, or other basis for relief in respect of the exercise of, any other remedy against the mortgaged Property or any other instrument securing any promissory note secured by this Deed of Trust or as prescribed by law or in equity in case of default; (e) prevent or in any way hinder Beneficiary from exercising, or constitute a defense, an affirmative defense, a counterclaim, or other basis for relief in respect of the exercise of, its remedies in respect of any deposits, insurance proceeds, condemnation awards or other monies or other collateral or letters of credit securing any promissory note secured by this Deed of Trust; (f) relieve Trustor of any of its obligations under any indemnity delivered by Trustor to Beneficiary; or (g) affect in any way the validity of any guarantee or indemnity from any person of all or any of the obligations evidenced and secured by any promissory note secured by this Deed of Trust, and this Deed of Trust. The foregoing provisions of this paragraph are limited by the provision that in the event of the occurrence of a default, Trustor and its successors and assigns shall have personal liability under this Deed of Trust for any deficiency judgment, but only if and to the extent Trustor, its principals, shareholders, partners, members or its successors and assigns received rentals, other revenues, or other payments or proceeds in respect of the mortgaged Property, which rentals, other revenues, or other payments or proceeds have not been used for the payment of ordinary and reasonable operating expenses of the mortgaged Property after the occurrence of such default, ordinary and reasonable capital improvements to the mortgaged Property, debt service, real estate taxes in respect of the mortgaged Property and basic management fees, but not incentive fees, payable to an entity or person unaffiliated with Trustor in connection with the operation of the mortgaged Property, which are then due and payable. Notwithstanding the first sentence of this paragraph, Beneficiary may recover directly from Trustor or from any other party:

(a) any damages, costs and expenses incurred by Beneficiary as a result of fraud or any criminal act or acts of Trustor or any partner, shareholder, officer, director or employee of Trustor, or of any member of Trustor's limited liability company, or any partner of Trustor's partnership, or of any general or limited partner of such member or partner;

(b) any damages, costs and expenses incurred by Beneficiary as a result of any misappropriation of funds provided for the construction of the Project, as described in the Loan Agreement, or from misappropriation of rents and revenues from the operation of the Project, or proceeds of insurance policies or condemnation proceeds;

(c) any and all amounts owing by Trustor pursuant to any indemnity under the Loan Agreement; and

(d) all court costs and reasonable attorneys' fees reasonably incurred in enforcing or collecting upon any of the foregoing exceptions (provided that Beneficiary shall pay Trustor's reasonable court costs and attorneys' fees if Trustor is the prevailing party in any such enforcement or collection action).

34. Unless expressly subordinated by a recorded instrument duly executed by the Beneficiary, this Deed of Trust shall not be subordinate to any deed of trust, mortgage or other encumbrance.

35. The Beneficiary acknowledges that the Trustor intends to subdivide the Subject Property through recordation in the Official Records of the County of Los Angeles of a tract map (the "Tract Map") prior to the completion of construction of the Phase IIB (as defined in the Loan Agreement), and following such subdivision, the Project will exist on multiple legal parcels (the "Affordable Housing Parcels") and the other components of Phase IIB will exist on separate legal parcels (the "Market Rate Housing Parcels"). In connection with the subdivision and recordation of the Tract Map, Trustor intends to enter into a reciprocal easement agreement with covenants and conditions establishing, among other things, easements relating to access between the Affordable Housing Parcels and the Market Rate Housing Parcels (the "REA").

At such time during construction of Phase IIB that Trustor desires to cause the recordation of the Tract Map and the REA, Trustor shall deliver an execution copy of the Tract Map to the Beneficiary for execution. Within fifteen (15) days of receipt of the Tract Map, Beneficiary shall return an executed copy to Trustor. Upon Trustor's receipt of the executed Tract Map, Trustor shall be authorized by Beneficiary to cause the recordation of the Tract Map and the REA. In addition to the foregoing, Beneficiary agrees to execute and deliver to Trustor, within fifteen (15) days of receipt thereof, any and all documents necessary, in the opinion of the Title Company, to cause the subordination of the Authority Loan Documents to the Tract Map and the REA.

In connection with the execution of the sub-ground lease for the Market Rate Housing Parcels, provided that there is no continuing event of default under the Authority Loan Documents, Beneficiary shall cause the partial reconveyance of this Deed of Trust, and the partial release and partial termination of the Agreement Containing Covenants, the Notice of Affordability Restriction, and any other document recorded against the Subject Property in connection with the Authority Loan, from the Affordable Housing Parcels so that the Market Rate Housing Parcels are no longer encumbered by such documents, and that such documents only encumber the Affordable Housing Parcels (the "Reconveyance"). Beneficiary shall return all documents to be executed in connection with such reconveyance and release to Trustor within fifteen (15) days of receipt thereof.

Following the Reconveyance, notwithstanding any provision of this Deed of Trust to the contrary: (1) the definition of "Subject Property" in the Deed of Trust shall refer only to the Affordable Housing Parcels; (2) a default under the Senior Loan documents, the Amended DDA, as defined in the Loan Agreement, or Ground Lease (as amended) in connection with the other components of Phase IIB shall not constitute a default by Trustor under this Deed of Trust and the Authority Loan Documents, as defined in the Loan Agreement; and (3) only an event of a default by Trustor under the Amended DDA, or the Ground Lease (as amended) in connection with the Improvements on the Affordable Housing Parcels shall constitute a default by Trustor under this Deed of Trust and the Authority Loan Documents. In the event of conflict between the terms of this Section and any other Section of this Deed of Trust, the terms of this Section shall control.

IN WITNESS WHEREOF Trustor has executed this Deed of Trust as of the day and year set forth above.

TRUSTOR:

GRAND AVENUE M HOUSING PARTNERS, LLC, a California limited liability company

By: Related/Parcel M Development Co., LLC, a California limited liability company, its manager

By: _____
William A. Witte
President

THIS DOCUMENT MUST BE NOTARIZED FOR RECORDING PURPOSES

EXHIBIT A

LEGAL DESCRIPTION

All the certain real property located in the County of Los Angeles, State of California, described as follows:

PROMISSORY NOTE
TO THE LOS ANGELES GRAND AVENUE AUTHORITY
(PHASE IIB)

3% Interest — Los Angeles, California
$5,995,000 — _____, 2012

FOR VALUE RECEIVED, Grand Avenue M Housing Partners, LLC, a California limited liability company ("Borrower"), hereby promises to pay to the Los Angeles Grand Avenue Authority, a California joint powers authority (the "Authority"), or order, a principal amount of Five Million Nine Hundred Ninety-Five Thousand Dollars ($5,995,000) (the "Authority Loan" or the "Loan"). This Promissory Note (the "Authority Note" or "Note") is given pursuant to that certain Construction and Permanent Loan Agreement dated as of _____, 2012, between Borrower and Authority (the "Loan Agreement") and evidences the Authority Loan to Borrower, which provides part of the construction and permanent financing for the development of the Borrower's interest in that certain real property in the City of Los Angeles legally described in the Deed of Trust securing this Authority Note (the "Site"). The obligation of Borrower to Authority hereunder is subject to the terms of the Loan Agreement, this Authority Note and the following instruments, each dated on or about the date hereof, and, where applicable, executed and delivered by Borrower for the purpose of securing this Authority Note: an Agreement Containing Covenants Affecting Real Property ("Agreement Containing Covenants"); a Deed of Trust, Security Agreement and Fixture Filing (With Assignment of Rents) ("Authority Deed of Trust"); and an Assignment of Agreements, Plans, Specifications and Entitlements ("Assignment of Agreements"). Said documents are public records on file in the offices of Authority, and the provisions of said documents are incorporated herein by this reference. The Borrower shall pay interest at the rate, in the amount and at the time hereinafter provided.

1. Definitions. Any capitalized term not otherwise defined herein shall have the meaning ascribed to such term in the Loan Agreement. In addition, the following terms shall have the following meanings:

"Additional Proceeds" shall have the meaning set forth in Section 10(b) of this Authority Note.

"Affiliate" shall mean any person directly or indirectly, through one or more intermediaries, controlling, controlled by or under common control with Borrower, which, in the case of a partnership, shall include, each of the constituent general partners thereof. The term "control", as used in the immediately preceding sentence, means, with respect to a corporation, the right to exercise, directly or indirectly, fifty percent (50%) or more of the voting rights attributable to the shares of the controlled corporation and, with respect to a person that is not a corporation, the possession directly or indirectly, of the power to direct or cause the direction of the management or policies of the controlled person.

"Annual Financial Statement" shall mean the annual audited financial statement of Revenue and Operating Expenses and balance sheet for the Improvements, prepared at the Borrower's expense, by an independent certified public accountant reasonably acceptable to the Authority, which shall form the basis for determining the Residual Receipts.

"Asset Management Fee" shall mean any fee, regardless of how it is characterized (including, but not limited to, a "special limited partner fee", or otherwise), paid to the Tax Credit Equity Investor, or any other member or partner of Borrower, for the purpose of managing the affairs of the Tax Credit Equity Investor.

"Authority Deed of Trust" or "Deed of Trust" shall mean the Deed of Trust, Security Agreement and Fixture Filing (with Assignment of Rents) executed by Borrower in favor of Authority and recorded in the Official Records of the Los Angeles County Recorder's Office on _____, which secures this Authority Note and the Authority Loan evidenced hereby, as such Deed of Trust may be amended in accordance with the Loan Agreement and the Deed of Trust.

"Authority Loan" shall mean the loan made by the Authority to Borrower pursuant to the Loan Agreement in the principal amount of Five Million Nine Hundred Ninety-Five Thousand Dollars ($5,995,000), which is evidenced by this Authority Note.

"Authority Loan Documents" means, collectively, the Loan Agreement, the Agreement Containing Covenants, this Authority Note, the Authority Loan Deed of Trust, the Subordination Agreement(s) (if any), the Intercreditor Agreement (if any), the Assignment of Agreements, and all other documents required to be executed by the Borrower and/or Authority in connection with the transaction contemplated by the Loan Agreement.

"Authority's Share of Residual Receipts" shall mean a percentage derived from a fraction in which the principal amount of the Authority Loan is the numerator and the sum of the Authority Loan plus all other Residual Receipts Loans is the denominator, multiplied by fifty percent (50%). For example, assuming the principal amount of the Authority Loan is $1,000,000, and the principal amount of all other Residual Receipts Loans is $2,000,000, the Authority's Share would be $1,000,000 divided by $3,000,000, or 33.3%, multiplied by fifty percent (50%), or 16.67%. Provided, however, that Authority's Share of Residual Receipts shall be subject and subordinate to the priority in payment out of net cash flow of any loan or other obligation to the Senior Lender as set forth in that certain _____ **[NEED DOCUMENT REFERENCE]**. As of the date of the execution of this Authority Note, the Borrower does not anticipate having any Residual Receipts Loan other than the Authority Loan.

"Borrower Agreement" shall mean the limited partnership, operating agreement, or other agreement governing the operation of Borrower.

"Construction Loan" shall mean a loan secured by a deed of trust ("Construction Loan Deed of Trust") and made by a lender ("Construction Lender") to Borrower to

finance certain development costs of the Project during the construction phase of the Project.

"Cost Savings" shall have the meaning set forth in Section 10(a) of this Authority Note.

"Default Rate" shall mean the highest rate of interest that Authority is permitted to charge by law from time-to-time.

"Improvements" shall mean the residential development to be constructed on the Site, all as described in the Loan Agreement.

"Intercreditor Agreement" shall mean the agreement entered into by and among Authority, Borrower and the Senior Lender(s), dated on or about the date of this Authority Note.

"Investor Member/Limited Partner Capital Contribution" shall mean funds provided to Borrower by the Tax Credit Equity Investor in consideration of the Low Income Housing Tax Credit.

"Letter of Credit" shall mean that certain irrevocable, standby letter of credit, securing a portion of that certain tax-exempt note loan the proceeds of which will be used to construct Phase IIB.

"Low Income Housing Tax Credit" shall mean the tax credit authorized by the Tax Reform Act of 1986 and governed by Section 42 of the Internal Revenue Code.

"Managing Members" or "Managers" shall mean the members designated as such in the Borrower Agreement.

"Occupancy Date" shall mean the date on which the City of Los Angeles issues a temporary or final Certificate of Occupancy for the Improvements.

"Operating Expenses" shall mean actual, approved reasonable and customary costs, fees and expenses directly attributable to the operation, recordkeeping, maintenance, taxes and management of the Improvements and the Site, expressly including, but not limited to, the following: debt service on any Senior Loan; a commercially reasonable property management fee in an amount not to exceed six percent (6%) of effective gross income; during such time as the Letter of Credit is in effect (and regardless of whether or not the Letter of Credit is secured by a deed of trust encumbering the Affordable Housing Parcels), an annual credit enhancement fee to the provider of the Letter of Credit (provided, however, such amount shall not exceed the lesser of: (1) twenty percent (20%) of such fee, or (2) $96,000 **[AMOUNT TO BE DETERMINED/CONFIRMED]**); taxes and assessments; payroll and payroll taxes for property employees; insurance; security; painting; cleaning; repairs and alterations (not including capital costs); landscaping; sewer charges; utility charges; advertising; promotion and publicity; cable television, satellite and other similar services; office,

janitorial, cleaning and building supplies; approved recreational amenities and supplies; purchase, repair, servicing and installation of appliances, equipment, fixtures and furnishings; fire alarm monitoring; fees and expenses of accountants, attorneys, consultants and other professionals, including but not limited to annual audits and tax return preparation costs payable to a third party; required payments to the Replacement Reserve Account; required payments to the Operating Reserve Account; payment of any previously unpaid portion of the developer fee (if any) in an amount not to exceed $2,500,000; a reasonable Asset Management Fee payable to the Tax Credit Equity Investor not to exceed $7,500 which shall be subject to annual adjustments equal to 3%; a reasonable LLC Management Fee or Partnership Management Fee, as the case may be, not to exceed $17,500 per year, which shall be subject to annual adjustments equal to 3%. Operating Expenses shall be reported in the Annual Financial Statement. Expenses for the purposes of calculating Residual Receipts are subject to Authority approval and shall be calculated on a cash basis. Depreciation is not an eligible Operating Expense for calculating Residual Receipts.

"Operating Reserve Account" shall mean the fund established and capitalized by Borrower at the Occupancy Date with an amount equal to three (3) months of hard debt service plus three (3) months of operating expenses, or such greater amount as may be required by any other funding source. The Operating Reserve Account shall be used to pay Operating Expenses to the extent Revenues are insufficient.

"Partnership Management Fee" shall mean any fee, regardless of how it is characterized, paid to Borrower or Borrower's Managing Member, or managing general partner for the purpose of managing the affairs of Borrower.

"Permanent Loan" shall mean a loan secured by a deed of trust ("Permanent Loan Deed of Trust") and made by a lender ("Permanent Lender") to Borrower to finance certain development costs of the Project after construction completion and stabilization of occupancy of the Project, which may be effectuated by conversion or refinancing of all or a portion of the Construction Loan, or otherwise. As of the date of the execution of this Authority Note, Borrower does not anticipate having a Permanent Loan other than the Authority Loan, and the 7.7 Million Dollar Loan.

"Permitted Lender" shall mean the holder of any Security Financing Interest authorized by the Loan Agreement and identified in the Project Budget.

"Permitted Loan" shall mean any loan secured by a Security Financing Interest authorized by the Loan Agreement and identified in the Project Budget.

"Permitted Transfer" has the meaning set forth in the Loan Agreement.

"Person" means an individual, partnership, limited partnership, trust, estate, association, corporation, limited liability company or other entity, domestic or foreign.

"Project" shall mean the acquisition of the Site and development of the Improvements as required by the Loan Agreement.

"Project Budget" means the estimate of sources and uses of funds necessary to develop the Project approved by Authority in accordance with the Loan Agreement.

"Replacement Reserve Account" shall mean the fund established by Borrower at the Loan Conversion in which Borrower shall deposit at least $250 per unit per year, subject to annual adjustments equal to 3%, to be used to replace capital equipment and systems of the Project.

"Residual Receipts" shall mean (a) the Revenue minus (b) the Operating Expenses, calculated on a 12-month basis. All calculations of Residual Receipts shall be subject to verification and reasonable approval by the Authority.

"Residual Receipts Loan" shall mean any loan to be secured by a deed of trust on the Site that finances or refinances any portion of the Total Development Costs and is to be repaid by a share of Borrower's net cash flow in proportion to all other Residual Receipts Loans.

"Revenue" shall mean the gross rental income from the Improvements, and any other income to the Borrower derived from the ownership, operation and management of the Site.

"Senior Lender" shall mean the maker of a Senior Loan.

"Senior Loan" shall mean the Construction Loan anticipated to be in the maximum original principal amount of approximately One Hundred Three Million Four Hundred Thousand Dollars ($103,400,000), made by Citibank, N.A., a national banking association, to Borrower, and the Letter of Credit, each of which shall be secured by deeds of trust that are senior and superior to the Authority Deed of Trust, or any other loan secured by a deed of trust or other instrument to which the Authority agrees to subordinate this Authority Note, the Authority Deed of Trust and the other Authority Loan Documents pursuant to the Loan Agreement. Following the repayment of the Construction Loan, the Borrower does not anticipate that the Project will have a Senior Loan.

"Site" shall mean the Real Property described as the "Subject Property" in and legally described as set forth in Exhibit "A" of the Authority Deed of Trust.

"Stabilized Occupancy Date" shall have the meaning set forth in Section 10(a) of this Authority Note.

"Subordination Agreement" shall mean the Subordination Agreement executed by Authority subordinating the Authority Loan to the Senior Loan.

"Tax Credit Equity Investor" shall mean any Person who will be an investor limited partner, or member, as the case may be, in Borrower and who will make Investor

Member/Limited Partner Capital Contributions in exchange for the Low Income Housing Tax Credit and own at least a 99% interest in the Borrower.

"Term" shall mean the term of this Authority Note which shall commence as of the date first written above and shall expire fifty-five (55) years after the latest of the following to occur: (a) the date first written above; (b) the Occupancy Date, if any; or (c) the recordation of the Certificate of Completion pursuant to Section 5.4 of the Loan Agreement.

"Total Development Costs" shall mean the total cost to Borrower of acquiring the Site and developing and constructing the Project thereon, as set forth in the Project Budget. For purposes of this Note, Total Development Costs are limited to the Project and do not include the costs for the other components of Phase IIB (as defined in the Loan Agreement).

"Transfer" shall mean and include any voluntary or involuntary transfer, sale, assignment, lease, sublease, license, franchise, concession, operating agreement, gift, hypothecation, mortgage, pledge or encumbrance, or the like, or all or any portion of the Site or any rights of the Borrower hereunder to any person or entity ("Transferee"), as provided in Section 11 of this Authority Note.

2. Evidence of Obligation. This Authority Note evidences the obligation of the Borrower to the Authority for the repayment of the Authority Loan.

3. Where and How Payable. This Authority Note is payable at the principal office of Authority, c/o County of Los Angeles, Chief Executive Office, 500 West Temple Street, Los Angeles, CA, 90012, or at such other place as the holder hereof may inform the Borrower in writing, in lawful money of the United States.

4. Security. This Authority Note shall be secured by the Authority Deed of Trust.

5. Interest. Except in an event of acceleration described in paragraphs (a) and (b) of Section 7, below, this Authority Note shall bear interest at the rate of three percent (3%) per annum, simple interest, which shall begin to accrue upon disbursement. In the case of an event of acceleration described in paragraphs (a) and (b) of Section 7, below, the unpaid balance shall bear interest at the highest rate of interest permitted by law until paid in full (the "Default Rate").

6. Payments. Except in an event of acceleration described in paragraphs (a) and (b) of Section 7 below, or in the event of a required adjustment pursuant to Section 10 below, no payments shall be due and payable under this Authority Note except to the extent of (a) the Authority's share of Residual Receipts as described in Section 8, below, and (b) the Authority's share of any refinancing.

7. Due on Expiration of Term or Upon Event of Acceleration. The entire unpaid principal balance of this Authority Note and any accrued but unpaid interest shall

be due and payable upon the expiration of the Term hereof, or immediately upon the occurrence of either of the following events of acceleration:

(a) if the Site or any portion thereof or interest therein is sold, transferred, assigned or refinanced, without the prior written approval of Authority, except as otherwise permitted in the Authority Loan Documents; or

(b) if there is a default by the Borrower under the terms of this Authority Note, the Authority Deed of Trust, the Loan Agreement, the Agreement Containing Covenants or any deed of trust or other instrument securing any Senior Loan or other obligations secured by a deed of trust on the Site, which is not cured within the respective time period, if any, provided herein and therein.

8. Residual Receipts. Subject to the adjustments described in Section 10 of this Authority Note, prior to the expiration of the Term, Borrower shall be obligated to repay the Authority Loan exclusively from the Authority's Share of Residual Receipts, as follows: Annually, not later than the first day of May, beginning with the calendar year following the calendar year in which the Occupancy Date occurs, Borrower shall submit to Authority an audited Annual Financial Statement for the preceding calendar year, prepared by a certified public accountant reasonably acceptable to the Authority, determining the amount of Residual Receipts, if any, generated in that year, together with payment of the Authority's Share of such Residual Receipts. The first such Annual Financial Statement shall be for the partial year beginning on the Occupancy Date and ending on December 31 of that year. The Authority shall review and approve or disapprove such Annual Financial Statement, or request revisions, within 30 calendar days after receipt. If, as the result of the Authority's review of the statement, there is an increase in the amount of any payment due and payable to Authority (as the result, for example, of a determination that the actual amount of Residual Receipts to which the Authority is entitled exceeds the amount of Authority's share of Residual Receipts shown in the Annual Financial Statement submitted by Borrower), Borrower shall promptly pay to the Authority the difference, with interest, from the date on which such payment was due, at the Default Rate, but in any event within ten (10) calendar days of notice of such increase.

9. Application of Payments. All payments to the Authority shall be applied first to interest, then to reduce the principal amount owed.

10. Mandatory Prepayments. The Authority Loan shall be subject to prepayment equal to the Authority's share of any "Cost Savings" or "Additional Proceeds" (as provided below).

(a) Cost Savings. If the actual Total Development Costs, as determined by a cost certification performed at Borrower's expense, by a certified public accountant acceptable to the Authority not later than 30 calendar days following the later of the 90 calendar days after the Project achieves 90% occupancy (the "Stabilized Occupancy Date"), are less than the sum of construction sources as set forth in the

Project Budget attached to the Loan Agreement, the resulting cost savings ("Cost Savings") shall be allocated pro rata between the Senior Lender and Authority.

(b) Additional Proceeds. If at any time Borrower refinances the initial Senior Loan, Borrower shall apply the proceeds of any such refinancing in excess of the amount needed to pay in full the then-current balance of the Senior Loan, first to pay the unpaid portion of the developer fee, if any, in full and thereafter to pay accrued interest on the principal amount of the Authority Loan (the "Additional Proceeds"). Notwithstanding anything to the contrary contained in the Authority Loan Documents, the Authority Loan shall be assumable by a successor owner of the Project upon a Transfer of the Project that is either a Permitted Transfer, or a Transfer that is approved by the Authority in writing in accordance with Article 7 of the Loan Agreement; provided, however, all accrued interest on the principal amount of the Authority Loan shall be due and payable upon such Transfer.

11. Reserved.

12. Affordable Housing Requirements. Borrower agrees for itself, its successors and assigns, that the use of the Site shall be subject to the restrictions on rent and occupancy set forth in the Agreement Containing Covenants.

13. Limited Recourse. Subject to the provisions and limitations of this Section 13, the obligation to repay the Authority Loan is a nonrecourse obligation of the Borrower. Borrower and any member or partner of Borrower shall not have any personal liability for repayment of the loan, except as provided in this Section 13. The sole recourse of Authority shall be the exercise of its rights against the Site and any related security for the Authority Loan. Provided, however, that the foregoing shall not (a) constitute a waiver of any obligation evidenced by this Authority Note or the Deed of Trust; (b) limit the right of the Authority to name Borrower as a party defendant in any action or suit for judicial foreclosure and sale under this Authority Note and the Deed of Trust or any action or proceeding hereunder so long as no judgment in the nature of a deficiency judgment shall be asked for or taken against Borrower; (c) release or impair this Authority Note or the Deed of Trust; (d) prevent or in any way hinder Authority from exercising, or constitute a defense, an affirmative defense, a counterclaim, or other basis for relief in respect of the exercise of, any other remedy against the mortgaged Site or any other instrument securing the Note or as prescribed by law or in equity in case of default; (e) prevent or in any way hinder Authority from exercising, or constitute a defense, an affirmative defense, a counterclaim, or other basis for relief in respect of the exercise of, its remedies in respect of any deposits, insurance proceeds, condemnation awards or other monies or other collateral or letters of credit securing the Note; (f) relieve Borrower of any of its obligations under any indemnity delivered by Borrower to Authority; or (g) affect in any way the validity of any guarantee or indemnity from any person of all or any of the obligations evidenced and secured by this Authority Note and the Deed of Trust. The foregoing provisions of this paragraph are limited by the provision that in the event of the occurrence of a default, Borrower and its successors and assigns shall have personal liability hereunder for any deficiency judgment, but only if and to the extent Borrower, its principals, shareholders, partners or

its successors and assigns received rentals, other revenues, or other payments or proceeds in respect of the mortgaged Site after the occurrence of such default, which rentals, other revenues, or other payments or proceeds have not been used for the payment of ordinary and reasonable operating expenses of the mortgaged Site, ordinary and reasonable capital improvements to the mortgaged Site, debt service, real estate taxes in respect of the mortgaged Site and basic management fees, but not incentive fees, payable to an entity or person unaffiliated with Borrower in connection with the operation of the mortgaged Site, which are then due and payable. Notwithstanding the first sentence of this paragraph, Authority may recover directly from Borrower or from any other party:

(a) any damages, costs and expenses incurred by Authority as a result of fraud or any criminal act or acts of Borrower or any member, partner, shareholder, officer, director or employee of Borrower, or of any member or general or limited partner of Borrower, or of any general or limited partner of such member or general or limited partner;

(b) any damages, costs and expenses incurred by Authority as a result of any misappropriation of funds provided to pay Total Development Costs, as described in the Loan Agreement, rents and revenues from the operation of the Project, or proceeds of insurance policies or condemnation proceeds;

(c) any and all amounts owing by Borrower pursuant to any indemnity set forth in the Loan Agreement, including but not limited to the indemnification regarding Hazardous Substances, and

(d) all court costs and attorneys' fees reasonably incurred in enforcing or collecting upon any of the foregoing exceptions (provided that Authority shall pay Borrower's reasonable court costs and attorneys' fees if Borrower is the prevailing party in any such enforcement or collection action).

14. Waivers. Borrower waives presentment for payment, demand, protest, and notices of dishonor and of protest; the benefits of all waivable exemptions; and all defenses and pleas on the ground of any extension or extensions of the time of payment or of any due date under this Authority Note, in whole or in part, whether before or after maturity and with or without notice. Borrower hereby agrees to pay all costs and expenses, including reasonable attorney's fees, which may be incurred by the holder hereof, in the enforcement of this Authority Note, the Authority Deed of Trust or any term or provision of either thereof.

15. Exercise of Rights and Remedies. Subject to all applicable notice and cure periods, upon the failure of Borrower to perform or observe any other material term or provision of this Authority Note, upon any event of acceleration described in Section 7, or upon the occurrence of any other event of default under the terms of the Authority Deed of Trust, the Loan Agreement or the Agreement Containing Covenants, or any deed of trust securing the Senior Loan or other obligations secured by a deed of trust on the Site, the holder may exercise its rights or remedies hereunder or thereunder.

16. Defaults.

(a) Subject to the extensions of time set forth in Section 17, and subject to the further provisions of this Section 16, failure or delay by Borrower to perform any material term or provision of this Authority Note, the Authority Deed of Trust, the Loan Agreement or the Agreement Containing Covenants, or any deed of trust securing the Senior Loan or other obligations secured by a deed of trust on the Site, constitutes an "Event of Default" under this Authority Note.

(b) Authority shall give written notice of default to Borrower, specifying the default complained of by the Authority. Delay in giving such notice shall not constitute a waiver of any default nor shall it change the time of default.

(c) Any failures or delays by Authority in asserting any of its rights and remedies as to any Event of Default shall not operate as a waiver of any default or of any such rights or remedies. Delays by Authority in asserting any of its rights and remedies shall not deprive Authority of its right to institute and maintain any actions or proceedings which it may deem necessary to protect, assert, or enforce any such rights or remedies.

(d) If a monetary event of default occurs under the terms of this Authority Note or the Authority Deed of Trust, or any deed of trust securing the Senior Loan or Permanent Loan or other obligations secured by a deed of trust on the Site, prior to exercising any remedies hereunder or thereunder Authority shall give Borrower and each of the members or partners of Borrower identified in the Borrower Agreement, as the case may be, concurrent written notice of such default. Borrower shall have a reasonable period of time after such notice is given within which to cure the default prior to exercise of remedies by Authority under this Authority Note and/or the Authority Deed of Trust. In no event shall Authority be precluded from exercising remedies if its security becomes or is about to become materially impaired by any failure to cure a default or the default is not cured within fifteen (15) calendar days after the notice of default is received or deemed received. Notices to the Tax Credit Investor shall be sent to the following address: BF Grand Avenue, LP, c/o Boston Financial Investment Management, LP, 101 Arch Street, 13th Floor, Boston, MA 02110, Attn: Asset Management – Parcel M Grand Avenue Apartments; with a copy to Holland & Knight LLP, 10 St. James Avenue, Boston, MA 02116, Attn: James E. McDermott, Esq..

(e) If a non-monetary event of default occurs under the terms of the Loan Agreement, this Authority Note, the Authority Deed of Trust, the Agreement Containing Covenants or any document implementing the Loan Agreement or any deed of trust securing the Senior Loan or other obligations secured by a deed of trust on the Site, prior to exercising any remedies hereunder or thereunder, Authority shall give Borrower and each of the members or partners of Borrower identified in the Borrower Agreement, as the case may be, concurrent notice of such default. If the default is reasonably capable of being cured within thirty (30) calendar days after such notice is received or deemed received, Borrower shall have such period to effect a cure prior to

exercise of remedies by the Authority under the Loan Agreement, the Agreement Containing Covenants, this Authority Note and/or the Authority Deed of Trust. If the default is such that it is not reasonably capable of being cured within thirty (30) days, and Borrower (i) initiates corrective action within said period, and (ii) diligently and in good faith works to effect a cure as soon as possible, then Borrower shall have such additional time as is reasonably necessary to cure the default prior to exercise of any remedies by Authority. If Borrower fails to take corrective action or to cure the default within a reasonable time, Authority shall give Borrower and each of the members or partners of identified in the Borrower Agreement, written notice thereof, whereupon the Tax Credit Equity Investor may exercise any authority it may have under the Borrower Agreement, as the case may be, to remove and replace the managing general partner or managing member with a substitute managing general partner or managing member, as the case may be, who shall effect a cure within a reasonable time thereafter in accordance with the foregoing provisions. In no event shall Authority be precluded from exercising remedies if its security becomes or is about to become materially jeopardized by any failure to cure a default or the default is not cured within one hundred eighty (180) calendar days after the notice of default is received or deemed received.

(f) Any notice of default that is transmitted by electronic facsimile transmission followed by delivery of a "hard" copy, shall be deemed delivered upon its transmission; any notice of default that is personally delivered (including by means of professional messenger service, courier service such as United Parcel Service or Federal Express, or by U.S. Postal Service), shall be deemed received on the documented date of receipt by Borrower; and any notice of default that is sent by registered or certified mail, postage prepaid, return receipt required shall be deemed received on the date of receipt thereof.

17. Partial Invalidity. If the rights created by this Authority Note shall be held by a court of competent jurisdiction to be invalid or unenforceable as to any part of the obligations described herein, the remaining obligations shall be completely performed and paid.

18. Subordination to Senior Loans. The Authority Deed of Trust securing this Authority Note and all other Authority Loan Documents have been made subordinate and junior to the claims, liens or charges of the Senior Loan deeds of trust and all other instruments securing the Senior Loan by that certain Subordination Agreement by and among Authority, Borrower and Senior Lender which is being recorded concurrently with the execution and delivery of this Authority Note.

19. Subordination to Extended Low-Income Housing Commitment. Authority agrees that the lien of the Authority Deed of Trust shall be subordinate to any extended low-income housing commitment (as such term is defined in Section 42(h)(6)(B) of the Internal Revenue Code) (the "Extended Use Agreement") recorded against the Project; provided that such Extended Use Agreement, by its terms, must terminate upon foreclosure under the Authority Deed of Trust or upon a transfer of the Project by instrument in lieu of foreclosure or comparable conversion of the Loan, in accordance with Section 42(h)(6)(E) of the Internal Revenue Code. The following rule contained in

Section 42(h)(6)(E)(ii) of the Internal Revenue Code of 1986, as amended, shall also apply: for a period of three (3) years from the date of foreclosure, with respect to any unit that had been regulated by the Extended Use Agreement, (i) none of the tenants occupying those units at the time of foreclosure may be evicted or their tenancy terminated (other than for good cause), (ii) nor may any rent be increased except as otherwise permitted under Section 42 of the Code. Borrower acknowledges and agrees that any default, event of default, or breach (however such terms may be defined) under the Extended Use Agreement shall be an event of default under this Authority Note and the Authority Deed of Trust and that any costs, damages or other amounts, including reasonable attorneys' fees incurred by Authority as a result of an event of default by Borrower, and any amounts paid by Authority to cure any default under the Extended Use Agreement shall be an obligation of Borrower and become a part of the debt evidenced by this Authority Note and secured by the Authority Deed of Trust.

20. Approvals. In any approval, consent or other determination by Authority required under this Authority Note or any of the other Authority Loan Documents, Authority shall act reasonably and in good faith.

21. Right to Prepay. Borrower shall have the right to prepay the obligation evidenced by this Authority Note, or any part thereof, without penalty.

22. Subdivision and Reconveyance. Notwithstanding anything to the contrary contained herein, the Authority hereby approves of the recordation of the Tract Map and the Reconveyance (as such terms are defined in the Authority Deed of Trust). Borrower's exercise of its rights to effect the recordation of the Tract Map and the Reconveyance shall not constitute a default hereunder.

Remainder of Page Left Intentionally Blank

IN WITNESS WHEREOF Borrower has executed this Authority Note as of the day and year set forth above.

GRAND AVENUE M HOUSING PARTNERS, LLC, a California limited liability company

By: Related/Parcel M Development Co., LLC, a California limited liability company, its manager

By: _____
William A. Witte
President

CONSTRUCTION AND PERMANENT

LOAN AGREEMENT

GRAND AVENUE- PHASE IIB

by and between

THE LOS ANGELES GRAND AVENUE AUTHORITY,

("Authority"),

and

GRAND AVENUE M HOUSING PARTNERS, LLC

("Borrower")

TABLE OF CONTENTS

Page

ARTICLE 1. SUBJECT OF AGREEMENT 1

1.1 Purpose of Agreement 1
1.2 Definitions 2
1.3 Exhibits 13

ARTICLE 2. PARTIES TO THE AGREEMENT 14

2.1 Authority. 14
2.2 Borrower. 14
2.3 No Joint Venture. 14

ARTICLE 3. METHOD OF FINANCING 14

3.1 Total Development Costs. 14
3.2 Authority Construction and Permanent Loan. 15
3.3 Conditions Precedent to Disbursement. 17
3.4 Disbursement of Authority Loan. 21
3.5 Construction Period Financing. 22
3.6 Permanent Sources of Financing. 23
3.7 Evidence of Financing. 23
3.8 Subordination. 23

ARTICLE 4. SCOPE OF DEVELOPMENT/DESIGN REQUIREMENTS 24

4.1 Design in Conformance with Scope of Development, Authority Housing Design Guidelines and Approved Project Documents. 24
4.2 Project Documents. 24
4.3 Design and Construction Documents Compliance with Federal Law. 24
4.4 Project Approvals. 25
4.5 New Material Changes. 25
4.6 Reserved. 25
4.7 No Change in Project Documents. 25
4.8 Permits and Approvals. 25
4.9 Zoning and Land Use Requirements. 26
4.10 Authority Review. 26

ARTICLE 5. CONSTRUCTION OF THE IMPROVEMENTS. 26

5.1 Commencement of Construction. 26
5.2 Completion of Construction. 26
5.3 Construction Pursuant to Scope and Plans. 26

TABLE OF CONTENTS

Page

5.4 Certificate of Completion. 27
5.5 Compliance with Applicable Law and Authority Policies. 28
5.6 Reserved. 29
5.7 Construction Signs. 29
5.8 Publicity. 29
5.9 Progress Reports. 29
5.10 Entry by the Authority. 29
5.11 Mechanics' Liens. 30
5.12 Non-Discrimination During Construction; Equal Opportunity. 30
5.13 Affirmative Outreach in Contracting Procedures and Employment, Including Utilization of Project Area, Minority, Women and Other Businesses and Persons. 31
5.14 Cost of Development. 33
5.15 Prevailing Wages. 33

ARTICLE 6. USE OF THE SITE AND BORROWER OBLIGATIONS DURING AND AFTER CONSTRUCTION. 35

6.1 Uses. 35
6.2 Affordability. 35
6.3 Allowable Rent. 35
6.4 Maintenance of the Property. 36
6.5 Management Requirements. 36
6.6 Obligation to Refrain from Discrimination. 37
6.7 Form of Nondiscrimination and Nonsegregation Clauses. 37
6.8 Barriers to the Disabled. 38
6.9 Effect and Duration of Covenants. 40
6.10 Agreement Containing Covenants. 40
6.11 Monitoring. 40
6.12 Indemnity. 40
6.13 Insurance Coverage. 41
6.14 Insurance Advances. 41
6.15 Hazardous Materials. 42
6.16 Taxes and Assessments. 44
6.17 Authority's Living Wage, Contractor/Developer Responsibility, Service Worker Retention, and Equal Benefits Policies. 44

ARTICLE 7. ASSIGNMENT AND TRANSFERS. 47

7.1 Definitions. 47
7.2 Restrictions on Transfer. 47
7.3 Prohibited Transfers. 48
7.4 Effectuation of Transfers. 49

TABLE OF CONTENTS

Page

ARTICLE 8. SECURITY FINANCING AND RIGHTS OF LENDERS 50

8.1 No Encumbrances Except for Development Purposes. 50
8.2 Lender Not Obligated to Construct. 51
8.3 Notice of Default and Right to Cure. 51
8.4 Failure of Holder to Complete Project. 52
8.5 Right of Authority to Cure. 52
8.6 Permitted Lenders to be Notified. 53
8.7 Modifications. 53

ARTICLE 9. DEFAULT AND REMEDIES 53

9.1 Defaults – General. 53
9.2 Institution of Legal Actions. 55
9.3 Applicable Law. 55
9.4 Acceptance of Service of Process. 55
9.5 Rights and Remedies Are Cumulative. 55
9.6 Damages. 55
9.7 Specific Performance. 56
9.8 Reserved. 56
9.9 Termination by Authority. 56
9.10 Survival. 56
9.11 Inaction Not a Waiver of Default. 57
9.12 Attorneys' Fees. 57

ARTICLE 10. GENERAL PROVISIONS 57

10.1 Borrower Representations and Warranties. 57
10.2 Notices. 58
10.3 Enforced Delay: Extension of Time of Performance. 59
10.4 Conflict of Interest. 60
10.5 Non-liability of Authority Officials and Employees. 60
10.6 Inspection of Books and Records. 60
10.7 Approvals. 60
10.8 Real Estate Commissions. 61
10.9 Construction and Interpretation of Agreement. 61
10.10 Time of Essence. 62
10.11 Relationship of the Parties. 62
10.12 Compliance with Law. 62
10.13 Binding Effect. 62
10.14 Rights of Third Parties. 62
10.15 Authority to Sign. 63
10.16 Use of Project Images. 63
10.17 Plans and Data. 64
10.18 Applicable Law. 64

TABLE OF CONTENTS

Page

10.19 Severability. 64
10.20 Binding Upon Successors; Covenants to Run With Land. 64
10.21 Effectiveness of Agreement. 65
10.22 Amendments. 65
10.23 Reserved. 65
10.24 Submittals and Approvals. 65
10.25 Incorporation by Reference. 66
10.26 Counterparts. 66
10.27 Entire Understanding of the Parties. 66
10.28 Approval Procedure. 66
10.29 Partial Reconveyance upon Subdivision. 66

CONSTRUCTION AND PERMANENT LOAN AGREEMENT

This Loan Agreement ("Agreement"), dated, for identification purposes only, as of _____, 2012, is entered into by and between GRAND AVENUE M HOUSING PARTNERS, LLC, a California limited liability company ("Borrower"), and THE LOS ANGELES GRAND AVENUE AUTHORITY, a California joint powers authority ("Authority"). Authority and Borrower are sometimes individually referred to in this Agreement as "Party" and collectively referred to as "Parties."

ARTICLE 1. SUBJECT OF AGREEMENT

1.1 Purpose of Agreement

a. The purpose of this Agreement is to effectuate the Redevelopment Plan for the Bunker Hill Redevelopment Project by providing part of the financing for an affordable housing development to be constructed on the Site (defined below), which shall be operated as rental housing that is affordable to Forty Percent Households and Very Low-Income Households (as defined below). This Agreement implements the assistance to be provided for the development of affordable housing as set forth in Section 301(3) of the Original DDA (as defined below), as amended by Section 4.6(b) of the Second Amendment (as defined below), and as further amended by Section 6 of the Third Amendment (as defined below). The development and use of the Site pursuant to this Agreement, and the fulfillment generally of this Agreement, are in the vital and best interests of the City of Los Angeles and the health, safety, morals, and welfare of its residents, and in accord with the public purposes and provisions of applicable federal, state, and local laws and requirements.

b. Authority desires to assist Borrower to construct on the Site an affordable housing development, as described below (the "Project"), to be rented, at an affordable rent, to and occupied by, Forty Percent Income Households and Very Low Income Households, as more particularly described in this Agreement.

c. This Agreement is entered into for the purpose of redeveloping the Site and providing affordable housing and not for speculation in landholding. In addition to this Agreement, Authority and Borrower are parties to the Amended DDA, as defined below, and the Ground Lease, as defined below.

d. Authority intends by this Agreement, the Amended DDA, and the Ground Lease to cause the redevelopment of the Site to occur and to increase and improve the community's supply of affordable housing for Forty Percent Income Households and Very Low Income Households. The Amended DDA and the Ground Lease anticipate that the Project will be located within a single structure to be constructed by Borrower and containing approximately two hundred seventy one (271) residential units (of which the Project constitutes fifty-six (56) units), related amenities, and approximately seven thousand two hundred fifty (7,250) square feet of retail space (collectively, the "Phase IIB") to be developed on the Site.

e. Each Party hereby acknowledges that it will obtain valuable benefits from this Agreement. The Parties further acknowledge that in entering into this Agreement, each Party is relying on the performance of the other Party.

i. Authority acknowledges that the development and use of the Project on the Site by Borrower pursuant to the terms and conditions of this Agreement will further the purposes set forth in the California Community Redevelopment Law and the Authority's goals by increasing the community's supply of housing that is affordable to persons and families of very low income, and lower incomes, helping to remedy and prevent the recurrence of the physical and/or economic conditions of blight that currently exist in the Redevelopment Project Area, generating construction jobs in the development of the Project and permanent jobs in its operation, and encouraging further private investment that will benefit the entire Redevelopment Project Area.

ii. Borrower acknowledges that performance by Authority of its obligations pursuant to the terms of this Agreement will provide to Borrower and its principals significant and valuable financial benefits and that Authority's performance of these obligations is in consideration of Borrower's commitment to comply with the requirements of this Agreement in the development, construction, operation and use of the Project on the Site. These benefits will include, but not be limited to the following: subject to the terms and conditions of this Agreement, Authority will make a loan to Borrower in the amount of the Authority Construction and Permanent Loan, subject to terms that are beneficial to Borrower and not available to Borrower from commercial lenders or other governmental authorities.

1.2 Definitions

Capitalized terms not otherwise defined in this Agreement shall have the following meanings:

"Affiliate" shall mean any person directly or indirectly, through one or more intermediaries, controlling, controlled by or under common control with Borrower, which, in the case of a partnership, shall include, each of the constituent general partners thereof, and in the case of a limited liability company, each of the constituent members thereof. The term "control", as used in the immediately preceding sentence, means, with respect to a corporation, the right to exercise, directly or indirectly, fifty percent (50%) or more of the voting rights attributable to the shares of the controlled corporation and, with respect to a person that is not a corporation, the possession directly or indirectly, of the power to direct or cause the direction of the management or policies of the controlled person.

"Affordable Rent" shall mean monthly rent, including a reasonable utility allowance, that does not exceed the following respective amounts (which, as of the date hereof, are more particularly set forth in the Income and Rent Limits exhibit attached to the Agreement Containing Covenants (Exhibit J of Part I of Exhibits)):

a. for a Forty Percent Income Household, one-twelfth of the product of thirty percent (30%) times forty percent (40%) of the Area Median Income adjusted for family size appropriate for the unit, as determined in accordance with the TCAC Regulations, subject to subsection (c), below;

b. for a Very Low Income Household, one-twelfth of the product of thirty percent (30%) times fifty percent (50%) of the Area Median Income adjusted for family size appropriate for the unit, as determined in accordance with the TCAC Regulations, subject to subsection (c), below; and

c. notwithstanding the foregoing, in no event shall rent exceed thirty (30%) percent times one hundred ten percent (110%) of the Area Median Income adjusted for family size appropriate for the unit, as set forth in California Health and Safety Code Section 50053(b) (which, as of the date hereof, is more particularly set forth in the Income and Rent Limits exhibit attached to the Agreement Containing Covenants (Exhibit J of Part I of Exhibits)).

"Affordable Unit" shall mean any of the fifty-six (56) dwelling units in the Improvements (other than one (1) manager's unit) required by this Agreement and/or the Agreement Containing Covenants to be rented exclusively to and occupied by a Forty Percent Income Household or a Very Low Income Household.

"Agreement" shall mean this Loan Agreement.

"Agreement Containing Covenants" shall mean the Agreement Containing Covenants Affecting Real Property to be entered into by the Authority and Borrower and recorded against the Site, substantially in the form attached to this Agreement as Exhibit J of Part I of Exhibits.

"Amended DDA" shall mean that certain Disposition and Development Agreement, dated as of March 5, 2007 by and between Grand Avenue L.A., LLC, a Delaware limited liability company and the Authority (the "Original DDA"), as amended by that certain First Amendment to Disposition and Development Agreement, dated as of August 23, 2010 (the "First Amendment"), to which The Broad Collection, a California nonprofit public benefit corporation ("Phase IIA Developer") is also a party, that certain Second Amendment to Disposition and Development Agreement, dated as of May 31, 2011 (the "Second Amendment"), and that certain Third Amendment to Disposition and Development Agreement, dated as of _____, 2012 (the "Third Amendment"), to which Borrower is also a party. The Amended DDA sets forth the terms and conditions for the development of the Master Development.

"Area Median Income" shall have the meaning set forth therefor in California Health and Safety Code Section 50093, as it may be amended from time to time, or, to the extent applicable, area median income as determined in accordance with the TCAC Regulations (as the context may require).

"Assignment of Agreements, Plans, Specifications and Entitlements" shall mean an instrument substantially in the form attached to this Agreement as Exhibit H of Part I of Exhibits.

"Authority" shall mean The Los Angeles Grand Avenue Authority, a California joint powers authority.

"Authority Board" shall mean the governing body of the Authority.

"Authority Construction and Permanent Loan" or "Authority Loan" shall mean the loan and advancement of funds to be made by Authority to Borrower pursuant to this Agreement. The Authority Construction and Permanent Loan constitutes the "Affordable Housing Loan" as defined in Section 4.6(d) of the Second Amendment.

"Authority Construction and Permanent Loan Note" or "Authority Note" shall mean the promissory note in favor of Authority, secured by the Authority Loan Deed of Trust, evidencing the Authority Loan, substantially in the form attached to this Agreement as Exhibit G of Part I of Exhibits.

"Authority Designated Representative" means the person or person(s) designated in writing by the Authority to act on behalf of the Authority in connection with providing approvals or consents under this Agreement. The Authority is under no obligation to designate an Authority Designated Representative.

"Authority Indemnified Parties" means the Authority, CRA/LA, A Designated Local Authority, the successor in interest to the Community Redevelopment Agency of the City of Los Angeles, the City, the County, and their respective commissioners, council members, board members, officers, beneficiaries, employees, agents, attorneys, representatives, legal successors and assigns.

"Authority Loan Deed of Trust" shall mean the Deed of Trust, Security Agreement and Fixture Filing (with Assignment of Rents) securing the Authority Loan, substantially in the form attached to this Agreement as Exhibit H of Part I of Exhibits.

"Authority Loan Documents" means, collectively, this Agreement, the Agreement Containing Covenants, the Notice of Affordability Restrictions, the Authority Construction and Permanent Loan Note, the Authority Loan Deed of Trust, the Subordination Agreement (if any), the Intercreditor Agreement (if any), the Assignment of Agreements, Plans, Specifications and Entitlements and all other documents required to be executed by the Borrower and/or Authority in connection with the transaction contemplated by this Agreement.

"Authority Loan Term" shall mean fifty-five (55) years after the latest of the following to occur: (a) the date of the Authority Construction and Permanent Loan Note; (b) issuance by the City of Los Angeles of a temporary or final certificate of occupancy

for the Improvements (the "Occupancy Date"), if any; or (c) the recordation of the Certificate of Completion pursuant to Section 5.4 of this Agreement.

"Authority Representatives" shall mean and include all of the respective predecessors, successors, assigns, agents, officials, employees, independent contractors, affiliates, principals, officers, directors, attorneys, accountants, representatives, staff and board members of Authority and of each of them.

"Borrower" shall mean Grand Avenue M Housing Partners, LLC, a California limited liability company whose manager is Related/Parcel M Development Co., LLC, a California limited liability company, or any permitted Transferee or successor in interest in accordance with Article 7 of this Agreement.

"Borrower Agreement" shall mean the Borrower's operating agreement, or limited partnership agreement, as the case may be, as amended from time to time in accordance with this Agreement.

"Building Permit" shall mean all building and grading permits required to be obtained from the City for the construction of the Improvements.

"Business Day" means any day on which Authority offices are open for business, not including Saturdays or Sundays or holidays.

"Certificate of Completion" shall mean that certificate issued by the Authority to the Borrower pursuant to Section 5.4 of this Agreement.

"City" shall mean the City of Los Angeles, California, a municipal corporation, operating through its governing body, the City Council, and its various departments.

"Closing" or "Loan Closing" shall mean the point in time when all Conditions Precedent as set forth in Section 3.3 of this Agreement have been satisfied (or have been duly waived by Parties authorized to waive such conditions), the Construction Loan Deed of Trust and the Authority Loan Deed of Trust have been recorded and the initial funding of the Construction Loan and the Authority Loan have occurred.

"Closing Date" shall mean the date on which the Closing shall occur.

"Construction Lender" shall mean the maker of the Construction Loan. The Construction Lender is sometimes referred to as the "Phase IIB Institutional Lender" in the Amended DDA and the Ground Lease.

"Community Outreach Plan" shall mean the plan described in Section 5.13.c. of this Agreement.

"Conditions Precedent" shall mean the conditions set forth in Section 3.3 of this Agreement.

"Construction Loan" shall mean a loan secured by a Construction Loan Deed of Trust and made by Senior Lender to Borrower to finance certain Development Costs of Phase IIB during the construction phase of the Phase IIB. The amount of the Construction Loan is anticipated to be approximately $103,400,000.

"Construction Loan Deed of Trust" shall mean the deed(s) of trust recorded against the Site securing the Construction Loan.

"Construction/Permanent Loan Deed of Trust" shall mean any deed of trust recorded against the Site securing a loan that is both a Construction Loan and Permanent Loan. As of the execution date of this Agreement, Borrower does not intend to have Construction/Permanent Loan Deed of Trust except for the Authority Loan Deed of Trust and the 7.7 Million Dollar Loan.

"County" shall mean the County of Los Angeles, a political subdivision of the State of California.

"CRA/LA" shall mean CRA/LA, A Designated Local Authority, a public body formed under California Health & Safety Code Section 34173(d)(3), the successor-in-interest to the Community Redevelopment Agency of the City of Los Angeles.

"Development Costs" shall mean any properly documented costs incurred by Borrower in connection with the acquisition of the Site and the entitlement, design, financing and construction of the Project, as set forth in the Project Budget.

"Effective Date" shall mean the date, after this Agreement is executed by Borrower and approved by the Authority Board, that this Agreement is executed by the Authority, which date shall be the latest date set forth on the signature page(s) of this Agreement.

"Eligible Household" shall mean, as applicable to this Agreement, a household that qualifies as a Forty Percent Income Household, or a Very Low Income Household.

"Encumbrance" shall mean and include any mortgage, deed of trust, lease, lien, easement, restrictive covenant or regulatory agreement or other security interest recorded against title to the Site.

"Environmental Laws" shall mean all federal, state and local laws, ordinances and regulations relating to industrial hygiene, environmental protection or the use, analysis, generation, manufacture, storage, release, disposal or transportation of Hazardous Substances.

"Escrow Agent" shall mean Old Republic Title Company, or such other escrow agent as may be approved by Authority.

"Event of Default" shall have the meaning set forth in Section 9.1 of this Agreement.

"Exceptions" shall mean all exceptions, reservations, liens, encumbrances, qualifications, covenants, conditions, restrictions, leases, easements, rights of way, or other like matters affecting the Site, and all matters or states of facts reflected on or arising out of any tentative or final parcel map for the Site, or concerning or related to zoning, subdivision, permitted use or physical condition of the Site, or arising from the redevelopment, development or related activities of Borrower.

"Final Construction Documents" shall mean the final construction documents for Phase IIB, including the Project, approved by the Authority in accordance with the Amended DDA and the Ground Lease.

"Forty Percent Income Household" shall mean a household whose income does not exceed forty percent (40%) of Area Median Income.

"General Contractor" shall mean the licensed contractor or firm selected by Borrower with overall responsibility for construction of the Project.

"Governmental Restrictions" shall mean and include any and all laws, statutes, ordinances, codes, rules, regulations, writs, injunctions, orders, decrees, rulings, conditions of approval, or authorization, now in force or which may hereafter be in force, of any governmental entity, Authority or political subdivision.

"Hazardous Materials" shall mean: (i) any chemical, compound, material, mixture or substance that is now or may later be defined or listed in, or otherwise classified pursuant to, any Hazardous Materials Law as a "hazardous substance", "hazardous waste", "extremely hazardous waste", acutely hazardous waste", radioactive waste", infectious waste", biohazardous waste", "toxic substance", "pollutant", "toxic pollutant", "contaminant", as well as any formulation not mentioned herein intended to define, list or classify substances by reason of deleterious properties such as ignitability, corrosivity, reactivity, carcinogenicity, toxicity, reproductive toxicity, "EP" toxicity, or "TCLP toxicity"; (ii) petroleum, natural gas, natural gas liquids, liquefied natural gas, synthetic gas usable for fuel (or mixtures of natural gas and such synthetic gas) and ash produced by a resource recovery facility utilizing a municipal solid waste stream, and drilling fluids, produced waters and other wastes associated with the exploration, development or production of crude oil, natural gas, or geothermal resources; (iii) "hazardous substance" as defined in Section 25281 of the California Health and Safety Code; (iv) "waste" as defined in Section 13050(d) of the California Water Code; (v) asbestos in any form; (vi) urea formaldehyde foam insulation; (vii) transforms or other equipment which contain dielectric fluid containing levels of polychlorinated biphenyls (PCBs) in excess of fifty (50) parts per million; (viii) radon; and

(ix) any other chemical, material, or substance that, because of its quantity, concentration, or physical or chemical characteristics, exposure to which is now or hereafter limited or regulated for health and safety reasons by any governmental authority, or which poses or is later determined to pose a significant present or potential hazard to human health and safety or to the environment if released into the workplace or the environment. The term "Hazardous Materials" shall not include: construction materials, gardening materials, household products, office supply products or janitorial supply products customarily used in the construction, maintenance, rehabilitation, or management of residential property, or commonly used or sold by hardware, home improvement stores, or medical clinics and which are used and stored in accordance with all applicable Hazardous Materials Laws.

"Hazardous Materials Laws" means all present and future federal, state and local laws, ordinances, regulations, permits, guidance documents, policies, decrees, orders and any other requirements, whether statutory, regulatory or contractual, of governmental authorities relating to health, safety, the environment or the use, handling, disposal or transportation of any Hazardous Materials (including, without limitation, the Comprehensive Environmental Response, Compensation and Liability Act of 1980, the Resource Conservation Recovery Act, the Clean Water Act, the Clean Air Act, and the applicable provisions of the California Health and Safety Code and the California Water Code, as each such statute may from time to time be amended, and the rules, regulations and guidance documents promulgated pursuant to any such statute).

"HCD" shall mean the California Department of Housing and Community Development.

"Housing Design Guidelines" shall mean CRA/LA's Multifamily Housing Design Guidelines.

"Improvements" shall mean and include all demolition, site preparation and grading, as well as all buildings, structures, fixtures, excavation, parking, landscaping, and other work, construction, rehabilitation, alterations and improvements of whatsoever character to be constructed or performed by Borrower on, around, under or over the Site pursuant to this Agreement.

"Intercreditor Agreement" shall mean an agreement to be entered into by and among Authority, Borrower, Senior Lender and/or other parties, as applicable, in form and substance that is acceptable to the Authority and that addresses, among other things, the delivery of the Authority Loan proceeds by the Authority to the Senior Lender, the disbursement of Authority Loan proceeds by Senior Lender to Borrower, subject to the terms and conditions of this Agreement, and gives Authority the right to review and approve disbursements of the Authority Loan by the Senior Lender.

"Intermediate Lender" shall mean Urban Funding, Inc., a California corporation

"Investor Member/Limited Partner Capital Contribution" shall mean funds provided to Borrower by the Tax Credit Equity Investor in consideration of the Low Income Housing Tax Credits.

"Letter of Credit" shall mean that certain irrevocable, standby letter of credit, securing a portion of that certain tax-exempt note loan the proceeds of which will be used to construct Phase IIB.

"Losses and Liabilities" shall mean and include all claims, writs, demands, causes of action, liabilities, losses, damages, judgments, injuries, expenses (including, without limitation, reasonable attorneys' fees and costs incurred by the indemnified party with respect to legal counsel of reasonably acceptable to it) charges, penalties or costs of whatsoever character, nature and kind, whether to property or to person, and whether by direct or derivative action, known or unknown, suspected or unsuspected, latent or patent, existing or contingent.

"Low Income Housing Tax Credits" shall mean the tax credits authorized by the Tax Reform Act of 1986 and governed by Section 42 of the Internal Revenue Code.

"Management Plan" shall mean a plan as described in Section 6.5.a of this Agreement.

"Notice of Affordability Restrictions" shall mean the Notice of Affordability Restrictions on Transfer of Property to be recorded against the Site, substantially in the form attached to this Agreement as Exhibit K of Part I of Exhibits.

"Ownership and/or Control" shall mean, without limitation, a majority of voting rights and beneficial ownership with respect to all classes of stock, interests in partnerships and/or beneficial interests under a trust, as may be applicable to the type of entity in question. In the case of a trust, such term shall also include the rights of the trustee as well as the beneficiary.

"Parties" shall mean the Authority and the Borrower, collectively, and "Party" shall mean either the Authority or the Borrower.

"Permanent Lender" shall mean the maker of the Permanent Loan. As of the date of the execution of this Agreement, Borrower does not anticipate having a Permanent Lender other than the Authority, and the Intermediate Lender.

"Permanent Loan" shall mean the loan secured by a Permanent Loan Deed of Trust and made by a third party to Borrower to finance certain development costs of the Project after construction completion and stabilization of occupancy of the Project. As of the date of the execution of this Agreement, Borrower does not anticipate having a Permanent Loan other than the Authority Loan and the 7.7 Million Dollar Loan.

"Permanent Loan Deed of Trust" shall mean any deed of trust recorded against the Site securing a Permanent Loan.

"Permitted Lender" shall mean the holder of any Security Financing Interest authorized by this Agreement and identified in the Project Budget.

"Permitted Loan" shall mean any loan secured by a Security Financing Interest authorized by this Agreement and identified in the Project Budget.

"Permitted Transfer" means any of the following, provided Borrower or a general partner or managing member (or their permitted successors), as the case may be, of Borrower retains day-to-day control over management and operations of the Site and the Improvements:

a. A conveyance of a security interest in the Site in connection with any Permitted Loan and any subsequent transfer of title by foreclosure, deed or other conveyance in lieu of foreclosure in connection therewith;

b. The inclusion of equity participation by Borrower by addition of members or partners to Borrower, or similar mechanisms;

c. Prior to the issuance of a Certificate of Completion, the transfer of non-managing membership or limited partnership interests to any Affiliate of the Tax Credit Equity Investor;

d. The lease for occupancy of units within the Project in accordance with the Agreement Containing Covenants;

e. The granting of easements or permits to facilitate the development of the Site in accordance with this Agreement;

f. The withdrawal, removal and/or replacement of any managing member or managing general partner of Borrower, as the case may be, pursuant to the terms of the Borrower Agreement, shall not constitute a default under any of the Authority Loan Documents, nor shall such actions accelerate the maturity of the Authority Loan, provided that any substitute member or general partner, as the case may be, is (1) an Affiliate of the Tax Credit Equity Investor, or (2) a Person that is reasonably acceptable to Authority and is selected with reasonable promptness;

g. The pledge of Borrower's managing member's interest in the Borrower to a Senior Lender or the Tax Credit Equity Investor, and the exercise of such lender's or the Tax Credit Equity Investor's rights under such pledge shall not constitute a default under the Authority Loan Documents and shall constitute a Permitted Transfer; notwithstanding the foregoing requirement that a Permitted Transfer requires Borrower or a managing member to retain day-to-day control over management and operations of the Property and the Improvements;

h. Prior to issuance of a Certificate of Completion (as defined in Section 5.4), transfers permitted under the Amended DDA (including, without limitation, the transfers expressly permitted under the Third Amendment);

i. After issuance of a Certificate of Completion (as defined in Section 5.4), transfers of the Tax Credit Equity Investor's interest in the Borrower (whether direct or indirect or whole or in part); and

j. Transfers pursuant to the terms of a purchase option, put/call option, or right of first refusal executed in connection with the admission of the Tax Credit Equity Investor pursuant to which the Tax Credit Equity Investor's interest may be transferred to the managing member of Borrower (or an affiliate thereof) or a lender.

"Person" means an individual, corporation, partnership, limited liability company, joint venture, association, firm, joint stock company, trust, unincorporated association or other entity.

"Project" shall mean the acquisition of the Site and the development of the Improvements, as more fully set forth in Section 1.1 of this Agreement and the Scope of Development. Following the recordation of the Tract Map, as set forth in Section 10.29, the Project shall be comprised of fifty-six (56) units (including one (1) manager's unit) for Forty Percent Income Households and Very Low Income Households.

"Project Budget" means the preliminary estimate of sources and uses of funds necessary to develop the Project attached to this Agreement as Exhibit E of Part I of Exhibits.

"Project Documents" shall mean and include such preliminary and Final Construction Drawings and specifications, grading plans, landscape plans, site development plans, plot plans, off-site improvement plans, architectural renderings and elevations, material specifications, parking plans and other plans and documents as are required to be submitted to Authority pursuant to Article 4 of this Agreement or any applicable Governmental Restrictions.

"REA" shall have the meaning set forth in Section 10.29.

"Redevelopment Plan" shall mean the "Redevelopment Plan for the Bunker Hill Redevelopment Project Area" adopted by Ordinance of the City Council of the City of Los Angeles, as amended from time-to-time.

"Residual Receipts" shall have the meaning set forth in the Authority Note.

"Residual Receipts Loan" shall mean any loan to be secured by a deed of trust on the Site that finances or refinances any portion of the Total Development Costs and is to be repaid by a share of Borrower's net cash flow in proportion to all other Residual Receipts Loans financing the Project. As of the date of the execution of this

Agreement, the Borrower does not anticipate having any Residual Receipts Loan other than the Authority Loan.

"Tract Map" shall have the meaning set forth in Section 10.29 of this Agreement.

"Schedule of Performance" shall mean the Schedule of Performance attached to the Amended DDA, setting out the dates and/or time periods by which certain obligations set forth in this Agreement must be accomplished. The Schedule of Performance is incorporated herein by this reference, and is subject to revision from time to time as mutually agreed upon in writing between the Borrower and the Authority in accordance with the Amended DDA.

"Scope of Development" shall mean the Scope of Development attached to the Amended DDA, which is incorporated herein by this reference.

"Security Financing Interests" shall have the meaning set forth in Section 8.1.b. of this Agreement.

"Senior Lender" shall mean, collectively, the City of Los Angeles, Citibank, N.A., a national association, the provider of the Letter of Credit, or the maker of any other Senior Loan or beneficiary of any Senior Loan deed of trust.

"Senior Loan" shall mean the Construction Loan, Permanent Loan, the Letter of Credit, and/or any other loan, credit enhancement or construction period guaranty facility that is secured by a deed of trust or other instrument to which Authority agrees to subordinate the Authority Loan Deed of Trust and the other Authority Loan documents.

"7.7 Million Dollar Loan" shall mean that certain loan to be made by the Intermediate Lender to the Borrower as more particularly set forth in Section 6(c) of the Third Amendment.

"Site" shall mean that certain real property depicted on the Site Map attached to this Agreement as Exhibit A of Part I of Exhibits and more particularly described by the Legal Description attached to this Agreement as Exhibit B of Part I of Exhibits. Following the recordation of the Tract Map, the Site shall consist of the Affordable Housing Parcels, as described in Section 10.29.

"Statutory Request for Notice of Default" shall mean an instrument substantially in the form attached to this Agreement as Exhibit I.

"Subordination Agreement" shall mean an instrument in form and substance that is acceptable to the Authority, pursuant to which the Authority Loan Deed of Trust, the Agreement Containing Covenants, the Notice of Affordability Restrictions and such other Authority Loan Documents as may be set forth therein are

made junior and subordinate to the deed of trust and other security instruments securing a Senior Loan.

"Tax Credit Equity Investor" shall mean any Person who will be an investor member or partner in Borrower, as the case may be, and who will make investment member/limited partner capital contributions in exchange for the Low Income Housing Tax Credit and own not less than a 99% interest in Borrower.

"TCAC" shall mean the California Tax Credit Allocation Committee.

"TCAC Regulations" shall mean the rules and regulations of TCAC, as may be amended from time to time.

"Title Company" shall mean Old Republic Title Company or such other title insurance company as may be approved by Authority.

"Total Development Costs" shall mean the total cost to Borrower of acquiring the Site and designing, entitling, financing and constructing the Project thereon, as set forth in the Project Budget. For purposes of this Agreement, Total Development Costs are limited to the Project and do not include the costs for the other components of Phase IIB.

"Transfer" shall mean and include any voluntary or involuntary transfer, sale, assignment, lease, sublease, license, franchise, concession, operating agreement, gift, hypothecation, mortgage, pledge or encumbrance, or the like, of all or any portion of the Site, any rights or obligations of the Borrower under this Agreement, or any interest in the Borrower, to any Person or entity ("Transferee").

"Very Low Income Households" shall mean a household whose income does not exceed fifty percent (50%) of Area Median Income.

1.3 Exhibits

The following is a list of the exhibits applicable to this Agreement. All of the following exhibits are hereby incorporated by this reference as though fully set forth herein:

a. Site Map

b. Legal Description

c. Reserved

d. Reserved

e. Project Budget

f. Form of Authority Construction and Permanent Loan Note

g. Form of Authority Loan Deed of Trust

h. Form of Assignment of Agreements, Plans, Specifications and Entitlements

i. Form of Statutory Request for Notice

j. Form of Agreement Containing Covenants

k. Form of Notice of Affordability Restrictions

ARTICLE 2. PARTIES TO THE AGREEMENT

2.1 Authority.

Authority is a California joint powers authority, exercising governmental functions and powers. The term "Authority" includes any assignee or successor to Authority's rights, powers and responsibilities under this Agreement.

2.2 Borrower.

Borrower is Grand Avenue M Housing Partners, LLC. The term "Borrower" as used herein includes any authorized and approved Transferee of Borrower as permitted in accordance with Article 7 of this Agreement. All of the terms, covenants, and conditions of this Agreement shall be binding on such Transferees, successors and assigns of Borrower.

2.3 No Joint Venture.

The Authority and Borrower are not and shall not be deemed to be partners, co-venturers, joint ventures or in any other way related to one another, nor shall either party have any fiduciary, confidential or agency relationship with the other.

ARTICLE 3. METHOD OF FINANCING

3.1 Total Development Costs.

The Parties estimate that the Total Development Costs will be as set forth in the Project Budget. The initial Project Budget is attached to this Agreement as Exhibit E to Part I of Exhibits. From time to time after the execution of this Agreement and through completion of construction, the Project Budget shall be subject to one or more amendments (each such amendment referred to as a "Revision" in this Agreement). Any Revision shall be subject to the approval of the Authority Designated Representative or designee as well as any Senior Lender. The Authority Designated Representative or designee is authorized to approve, and shall not unreasonably

withhold, condition, or delay, approval of, any requested Revision for which the Senior Lender's approval is not required under the terms of the Senior Loan documents, or which has been approved by the Senior Lender, if, within five (5) Business Days after receipt of the request, Authority receives such explanation and/or back-up information as was received and relied upon by the Senior Lender in connection with its approval of the Revision, and if the following conditions are satisfied:

a. The Revision is limited to a reallocation of budgeted funds among Project Budget line items without any increase in the Total Development Costs and the funds in the line item(s) to be reduced remain sufficient for completion of the Project and the requested increase in one or more line item(s) is to be used to pay approved costs, or the Revision involves an increase in the Total Development Costs, not to exceed fifteen percent (15%) of the Total Development Costs, and additional funds in an amount equal to the increase in the Total Development Costs will be provided by Borrower or a lender, and the requested increase in the Total Development Cost is to be used to pay approved costs.

b. The Revision does not increase the amount of the Authority Loan;

c. The Revision does not result in a material change to the design of the Project or Phase IIB;

d. The Revision does not materially adversely affect the economic feasibility of the Project or Phase IIB; and

e. The Revision does not materially adversely affect the security of the Authority Loan Deed of Trust. For purposes of this provision, the security of the Authority Deed of Trust shall not be deemed to be materially adversely affected if the amount of "hard debt" secured by deeds of trust senior to the Authority Loan Deed of Trust is not more than fifteen percent (15%) greater than the amount of "hard debt" set forth as part of the "Construction" sources of financing in the Project Budget.

Upon approval of any Revision, the Project Budget shall be replaced by the approved revised Project Budget and this Agreement shall be deemed amended to reflect such revised Project Budget.

3.2 Authority Construction and Permanent Loan.

a. Loan. Subject to: (i) the receipt of such funds by the Authority necessary to fund the Authority Loan, and (ii) all of the terms and conditions of this Agreement, Authority agrees to make a loan to Borrower in an amount not to exceed Five Million Nine Hundred Ninety-Five Thousand Dollars ($5,995,000) (the "Authority Construction and Permanent Loan" or "Authority Loan"). Authority shall have no obligation to disburse or continue to disburse Authority Loan funds if an Event of Default has occurred and is continuing, if any. The disbursement of Authority Loan funds is further conditioned upon: (A) the Borrower obtaining a leasehold interest in the Site, pursuant to the Ground Lease, upon or prior to the Closing Date; and (B) the

occurrence of each of the Conditions Precedent set forth in Section 3.3 of this Agreement on or prior to the time set forth in the Schedule of Performance for the scheduled Closing Date, which conditions are for the benefit of Authority. Notwithstanding anything to the contrary contained herein, Authority hereby acknowledges that as of the date hereof, the County Treasurer holds for the benefit of the Authority the amount of $5,626,000, and upon satisfaction of the conditions set forth in Section 3.3 hereto, Authority shall disburse those funds to the Senior Lender. Further, pursuant to the terms of the Third Amendment, "Phase IIB Affordable Housing Funds" (as defined in the Third Amendment) in an amount equal to $369,000 will be deposited by the CRA/LA with the County Treasurer, for the benefit of the Authority, no later than January 31, 2013. Authority hereby agrees to deposit such funds with the Senior Lender within ten (10) business days of receipt thereof.

b. Purpose of Loan. The purpose of the Authority Loan is to provide a portion of the funds needed to pay Development Costs for the Project. In no event shall any portion of the Authority Loan be used to finance any component of Phase IIB other than the Project.

c. Terms of the Authority Loan. The terms of the Authority Loan shall be as follows:

i. The term shall commence on the date of the Authority Note and shall have a term of fifty-five (55) years from the latest to occur of the following: (a) the date of the Authority Construction and Permanent Loan Note; (b) issuance by the City of a temporary or final certificate of occupancy for the Improvements (the "Occupancy Date"), if any; or (c) the recordation of the Certificate of Completion pursuant to Section 5.4 of this Agreement. The outstanding balance of the Authority Loan, principal and interest, shall be due and payable in full upon the first to occur of the following: (a) the occurrence of a Transfer (other than a Permitted Transfer) without the prior written consent of Authority, which shall be granted or denied in the sole and absolute discretion of Authority; (b) an uncured Event of Default by Borrower; or (c) expiration of the Term of the Authority Loan.

ii. The Authority Loan shall be secured by the Authority Loan Deed of Trust, which shall be subordinated to any Senior Loan approved by the Authority and any deed of trust in favor of any Senior Lender in connection therewith, any security instrument securing the Letter of Credit, and any regulatory agreement to be recorded in connection with financing the Project and/or the Low Income Housing Tax Credits. The Authority Loan shall be senior to the 7.7 Million Dollar Loan.

iii. The principal amount of the Authority Note shall be the original principal amount of Authority Loan, with interest from the date of disbursement. The principal amount shall bear simple interest at the rate of three percent (3%) per annum.

iv. Borrower shall repay the Authority Loan from annual payments equal to Authority's Share of Residual Receipts, if any. Authority's Share of

Residual Receipts shall be calculated as follows: (i) a percentage derived from a fraction in which the principal amount of the Authority Loan upon final disbursement is the numerator and the sum of the Authority Loan plus all other Residual Receipts Loans approved by Authority pursuant to this Agreement is the denominator, multiplied by (ii) fifty percent (50%). For example, assuming the principal amount of the Authority Loan is $1,000,000, and the only other Residual Receipts Loan is one in the principal amount of $2,000,000, the Authority's Share would be $1,000,000 divided by $3,000,000, or 33.33%, multiplied by fifty percent (50%), or 16.67%. Provided, however, that Authority's Share of Residual Receipts shall be subject and subordinate to the priority in payment out of net cash flow of any loan or other obligation to the Senior Lender as set forth in that certain _____ **[NEED DOCUMENT REFERENCE]**. As of the date of the execution of this Agreement, Borrower does not anticipate having any other Residual Receipts Loan, other than the Authority Loan, and the Parties anticipate that the Authority Share of Residual Receipts will equal fifty percent (50%) of Residual Receipts.

v. The obligation to repay the Authority Loan shall be evidenced by the Authority Note substantially in the form attached to this Agreement as Exhibit F of Part I of Exhibits.

3.3 Conditions Precedent to Disbursement.

Authority shall have no obligation to disburse Authority Loan funds or continue to disburse Authority Loan funds if an Event of Default has occurred and has not been cured within the applicable cure period, if any. The disbursement of Authority Loan funds is further conditioned upon (A) the Borrower obtaining a leasehold interest in the Site, pursuant to the Ground Lease, on or prior to the Closing Date; and (B) the occurrence of each of the following conditions, on or prior to the time set forth in the Schedule of Performance for disbursement of the Authority Loan, which conditions are for the benefit of Authority:

a. Borrower's Certificate. Borrower shall certify to Authority in writing that (i) all information provided by Borrower to Authority in connection with this Agreement remains true and correct in all material respects; and (ii) Borrower is in full compliance with the terms of this Agreement and there exists no Event of Default pursuant to this Agreement, the Amended DDA, or the Ground Lease, nor has any act, omission or condition occurred that, with the giving of notice, would constitute an Event of Default pursuant to this Agreement, the Amended DDA, or the Ground Lease;

b. Opinion of Borrower's Counsel. Borrower shall deliver to Authority a written opinion in a form acceptable to Authority, signed by counsel to Borrower, with respect to: (i) the legality, validity and binding effect of this Agreement and its enforceability against Borrower in accordance with its terms; (ii) the absence of any litigation or other proceedings, either pending or threatened, which could have a material adverse effect on the ability of Borrower to perform pursuant to this Agreement; and (iii) such other standard and customary matters for legal opinions to be given by Borrower's counsel in real estate secured financing transactions as reasonably

requested by Authority. The opinion of Borrower's counsel shall disclose whether any consent, approval or other authorization, regulation, declaration or filing with any court or other governmental agency or commission or other public entity is required for the due execution and delivery of this Agreement and the Authority Loan Documents pursuant to this Agreement;

c. Borrower's Formation Documents. Borrower shall deliver to Authority documentation relating to the status of Borrower's corporate, partnership, limited liability or other similar entity, and those of any general partners or managing members of Borrower, including, without limitation and as applicable, the following: operating agreements and any amendments thereto; articles of incorporation; limited partnership articles of incorporation (L.P.-1); statement of information and operating agreement (including any amendments thereto); copies of all resolutions or other necessary actions taken by such entity to authorize the execution of this Agreement and related documents; and a certificate of status issued by the California Secretary of State;

d. Intercreditor Agreement. The Authority and the Construction Lender have entered into the Intercreditor Agreement in such form as reasonably acceptable to the Authority, to evidence that the Authority Loan proceeds shall be delivered to the Construction Lender, and that the Construction Lender shall disburse such funds to the Borrower in accordance with the terms and conditions of the Authority Loan Documents.

e. Appraisal or Other Determination of Value. Authority shall have determined, in its sole discretion, that the value of the Site is acceptable;

f. Site Conditions. Authority shall determine, in its sole discretion, that no adverse Site conditions exist that may interfere with the development of the Site as provided in this Agreement, or, if such Site conditions exist, that they are being addressed to the satisfaction of Authority;

g. Authority's Lender's Title Insurance Policy. Authority shall have received written confirmation from the Title Company that the Title Company is committed to issue to Authority, upon the Closing, without cost to Authority, an extended ALTA Lender's Title Insurance Policy (without deletions), in the amount of the Authority Loan, showing the Authority Loan Deed of Trust and other encumbrances to be recorded against the Site as of the Closing Date in a relative order of priority that is acceptable to the Authority, together with such endorsements as Authority may request;

h. Evidence of Insurance. Borrower shall have submitted to Authority evidence of the Insurance Policies required by Section 6.13 of this Agreement. Authority, the County, CRA/LA, and the City shall be named as loss payees or additional insureds on all policies, as applicable. Borrower shall ensure that all worker compensation insurance policies carried by the General Contractor and subcontractors working on the Project include a waiver of subrogation in favor of Authority.

i. Project Budget. As a condition precedent to the Closing and the first disbursement of the Authority Loan and each subsequent disbursement of Authority Loan proceeds, Borrower shall deliver to Authority a certification in writing that the Project Budget remains in effect as of the date of such disbursement, or Borrower shall have delivered to the Authority a proposed revision to the Project Budget, demonstrating to the reasonable satisfaction of the Authority Designated Representative or designee the availability of sufficient funds to pay all Total Development Costs.

j. Evidence of Financing. (i) Borrower shall have obtained approval of all construction financing as set forth in the Project Budget, including all Construction Loans and equity financing; (ii) the Authority Designated Representative or designee shall have determined in writing that the approved construction financing, Borrower's equity and commitments of permanent financing are sufficient to complete Phase IIB, and (iii) In addition, the following shall have occurred: (A) Borrower shall have submitted to Authority for review the Borrower Agreement or amendment thereto, documenting the admission of the Tax Credit Equity Investor to Borrower, and consistent with the terms of this Agreement, Authority's Housing Policy and Underwriting Guidelines; (B) Borrower shall have submitted to Authority copies of substantially final Construction Loan documents; and (C) Borrower shall have delivered to Authority written estoppel certificates executed by the Tax Credit Equity Investor and each Construction Lender, addressed to Authority, in a form that is reasonably acceptable to the Authority Designated Representative or designee, which estoppel certificate shall include, among other things, the following: (1) certification stating that any existing agreement that obligates the issuer of the estoppel certificate to provide funding for the Project is in full force and effect and no default, or any act, failure, omission or condition that would constitute a default, exists under such agreement; and (2) a complete list of specific conditions, upon the satisfaction or waiver of which the issuer of the estoppel certificate is prepared and able to fulfill its obligation to disburse funds to Borrower for the Project; provided, however, Section 3.3(j)(iii)(c) shall not be required in connection with initial disbursement. The condition set forth in clause (i) of this paragraph shall be for the benefit of Authority and Borrower;

k. Final Construction Drawings. Borrower shall have submitted and Authority shall have approved Final Construction Drawings pursuant to Article 4 of this Agreement;

l. Construction Contracts. Borrower shall have delivered to Authority an executed copy of the prime construction contract for the Improvements consistent with the terms and conditions of the Amended DDA and the Ground Lease.

m. Project Labor Agreement. Borrower shall have executed, and delivered to Authority, a copy of that certain "Continuity of Work Agreement for Parcel 'M' Project between Pankow Builders and Los Angeles/Orange Counties Building and Construction Trads Council and the Craft Unions and District Councils" (the "PLA") in a form consistent with the terms and conditions of the Amended DDA, and reasonably acceptable to the Authority.

n. Permits and Entitlements. Borrower shall have delivered to Authority a list of all permits and entitlements required for the construction of the Improvements, and shall have demonstrated to the reasonable satisfaction of the Authority Designated Representative or designee that all conditions for the issuance of all necessary Building Permits have been satisfied (with the exception of payment of fees, which payment is provided for in the approved Project Budget) and that all land use approvals and entitlements have been obtained. If, despite Borrower's good faith efforts, the City approvals and any other necessary governmental permits and approvals have not been obtained by the scheduled Closing Date, this Agreement may be terminated by either Party pursuant to Section 9.8 and 9.9, below. This condition shall be for the benefit of Authority and Borrower.

o. Work Force Report/EO Plan and Report. Borrower shall have prepared and delivered to Authority its Work Force Report or Equal Opportunity Plan, and Initial Equal Opportunity Report in accordance with the terms and conditions of the Amended DDA.

p. Management Plan. Borrower shall have prepared and submitted to Authority a draft Management Plan for the Project as provided in the Agreement Containing Covenants, with the final Management Plan to be submitted to Authority for approval not later than one hundred twenty (120) calendar days prior to lease-up.

q. Borrower's Development Team. Borrower shall have submitted to Authority the name and background information for any proposed development manager or construction manager proposed to oversee and manage construction activities, and any property manager, management company or management agent proposed to manage and operate the Improvements upon completion. Any individual or entity currently listed as a non-responsible contractor by Authority or the City of Los Angeles shall not be eligible to perform work on the Project. Authority's review of the proposed development team members shall be based on their respective experience, financial capacity, reputation and whether they meet the requirements of the CRA/LA's Policy on Contractor Responsibility, as set forth in the Amended DDA and the Ground Lease.

r. Closing Cost Statement. Authority and Borrower shall have received an estimated closing cost statement of costs from the Escrow Agent. This condition shall be for the benefit of Authority and Borrower;

s. Recording Instructions. Borrower and Authority shall have executed and delivered to the Escrow Agent mutually agreed-upon and irrevocable supplemental escrow and recording instructions authorizing the Escrow Agent to record and/or deliver the closing documents listed below, which escrow instructions shall also state that the Authority Loan Deed of Trust shall be recorded only upon satisfaction of the Conditions Precedent and concurrently with the closing of the Construction Loan, which closing shall be evidenced by the recordation of the Construction Loan Deed of Trust and the initial funding of the Construction Loan, and the Escrow Agent shall have approved such

supplemental escrow and recording instructions as may have been prepared on behalf of Authority and Borrower; and

t. Documents. Not later than two (2) Business Days prior to the Closing Date, Authority, Borrower and/or other parties, as appropriate, shall have executed the following documents and delivered them to the Escrow Agent, for recording and distribution, as appropriate, upon the Closing:

i. Authority Note (to be signed by Borrower and retained by Authority);

ii. Authority Loan Deed of Trust (to be signed by Borrower and recorded concurrently with the Closing);

iii. Agreement Containing Covenants (to be signed by Borrower and Authority and recorded concurrently with the Closing);

iv. Notice of Affordability Restrictions on Transfer of Property (to be signed by Authority and Borrower and recorded concurrently with the Closing);

v. Assignment of Agreements, Plans, Specifications and Entitlements (to be signed by Borrower, Project architect and contractor, as applicable, and retained by Authority);

vi. Subordination Agreement(s), if any (to be signed by Authority, Borrower and any other lender(s) party to such agreement);

vii. Intercreditor Agreement(s), if any (to be signed by Authority, Borrower and any other lender(s) party to such agreement); and

viii. Statutory Request for Notice under Section 2924b of the Civil Code (to be signed by Authority and recorded upon the Closing).

3.4 Disbursement of Authority Loan.

Upon the satisfaction of conditions set forth in Section 3.3, above, and any other conditions set forth in the Intercreditor Agreement, the Authority shall disburse the Authority Loan to the Senior Lender, and, thereafter, the Authority Loan shall be disbursed to pay Development Costs in accordance with the Intercreditor Agreement and this Section. Subject to the foregoing, the Authority Loan shall be disbursed in four (4) equal installments. The first (1st) installment shall be disbursed on the Closing Date; the second (2nd) installment shall be disbursed no later than six (6) months after the Closing Date; the third (3rd) installment shall be disbursed no later than twelve (12) months after the Closing Date; and the fourth (4th) installment shall be disbursed upon the earlier to occur of: (A) the date which is twenty-four (24) months from the Closing Date, or (B) the issuance of a temporary certificate of occupancy for the Improvements; provided, however, the Authority shall have no obligation to disburse the Authority Loan funds or continue to disburse Authority Loan funds if an Event of Default has occurred

and has not been cured within the applicable cure period, if any, and provided, further, the full disbursement of the Authority Loan shall in no way be deemed to limit, waive, or impair the Authority's rights under Section 5.4.

3.5 Construction Period Financing.

The Parties anticipate that construction period financing (after Closing) will be provided from a combination of loans and equity, as follows:

a. Construction Loan. The Construction Loan(s) to be made by a Construction Lender in the approximate original principal amount set forth in the "Construction" sources column in the Project Budget. It is anticipated that disbursements of the Construction Loan shall be subject to a process for Authority review of Construction Lender disbursements, to be negotiated and provided in an Intercreditor Agreement, if any, to which Authority and the Construction Lender will be parties. It is anticipated that the Construction Loan will be disbursed to pay Development Costs and reduced to the amount set forth in the "Permanent" sources column in the Project Budget, after the Closing of the Construction Loan in accordance with its terms. The Construction Loan shall be secured by one or more senior priority deeds of trust (the beneficiaries of which shall be the Senior Lenders).

b. Authority Loan. The Authority Loan shall be a construction/permanent loan. Upon Closing, the terms of the Authority Loan shall be as set forth in Section 3.2 of this Agreement.

c. 7.7 Million Dollar Loan. The Intermediate Lender shall provide the 7.7 Million Dollar Loan, which consist of Seven Million Seven Hundred Thousand Dollars ($7,700,000) deposited by the Phase IIA Developer pursuant to the Amended DDA, plus accrued interest on such amount, in accordance with that certain grant agreement by and between the Authority and the Intermediate Lender, and certain loan documents between the Intermediate Lender and Borrower (collectively, the "7.7 Million Dollar Loan Documents").

d. Borrower Equity. Equity from the Borrower (the "Borrower Equity"), consisting of the following:

i. Funds in an approximate amount Seven Million Nine Hundred Nineteen Thousand Dollars ($7,919,000) shall be provided by the Tax Credit Equity Investor, derived from Investor Member/Partner Capital Contribution, which shall be disbursed in one or more installments as provided in the Borrower Agreement, and

ii. Borrower shall be responsible for providing any additional funds which may be needed to pay for cost overruns and contingencies not otherwise funded by the sources of Construction Financing described above.

Borrower Equity described in this paragraph d. shall consist of funds provided by Borrower, or borrowed funds, so long as repayment is not secured by any deed of trust on the Site.

3.6 Permanent Sources of Financing.

The Parties anticipate that permanent financing will be provided from a combination of loans and equity, as follows:

a. The Permanent Loans in the original principal amount as set forth in the Project Budget, secured by one or more senior priority deeds of trust (the beneficiaries of which shall include the Permanent Lenders, which consist of: (i) the Authority Loan, as described, above, and (ii) the 7.7 Million Dollar Loan pursuant to the 7.7 Million Dollar Loan Documents.

b. Borrower Equity, as described in paragraph d. of Section 3.5.

c. Borrower shall be responsible for providing any additional funds which may be needed to pay for cost overruns and contingencies not otherwise funded by the sources of Permanent Financing described above.

3.7 Evidence of Financing.

The sum of the sources of construction financing described in the Project Budget shall be sufficient at all times to pay all Total Development Costs as set forth in the most recently approved Project Budget. If at any time prior to the Certificate of Completion, the sum of the sources of funds described in the Project Budget is insufficient to pay all Total Development Costs, Borrower shall promptly deposit into the construction fund held by the Senior Lender additional Borrower Equity at least equal to the shortfall. The sum of the sources of Permanent financing described in the Project Budget shall be at least equal to the sum of the construction-period sources of funds plus all other Total Development Costs. Within the time provided therefore in the Schedule of Performance, Borrower shall submit, for approval by the Authority Designated Representative or designee, evidence of such financing, including all documents required by the Construction/Permanent Lender relating to the Construction/Permanent Loan. The Authority Designated Representative or designee shall not unreasonably withhold his or her approval. Borrower shall provide written certification to the Authority that such financing documents are correct copies of the actual documents to be executed by Borrower on or before the start of construction.

3.8 Subordination.

The Authority Loan Deed of Trust, Agreement Containing Covenants and Notice of Affordability Restrictions shall be subordinate to any Senior Loan approved by Authority, any deed of trust in favor of any Senior Lender in connection therewith, any security instrument securing the Letter of Credit, and any regulatory agreement to be recorded in connection with financing the Project and/or the Low Income Housing Tax

Credits. Concurrently with the Closing, the Authority shall execute such subordination agreements as may be necessary to subordinate the Authority Loan Deed of Trust and the Agreement Containing Covenants to the lien of any Senior Loan Deed of Trust, and the deed of trust securing the Letter of Credit provided such subordination agreements satisfy the requirements of California Health and Safety Code Section 33334.14 and are otherwise reasonably acceptable to the Authority. Authority agrees to make such reasonable modifications to Authority Loan Documents, the forms of which are attached to this Agreement as exhibits, that may be requested by any Senior Lender or the Tax Credit Equity Investor, provided such modification does not adversely affect the receipt of any material benefit by Authority hereunder or thereunder. Upon the reasonable request of the Tax Credit Equity Investor or a Senior Lender, Authority shall execute from time-to-time such estoppel certificates and subordination agreements to the extent they are consistent with and do not make material modifications to the terms of this Agreement. The Authority shall subordinate the Authority Loan Documents, as applicable, to the Tract Map, and the REA.

ARTICLE 4. SCOPE OF DEVELOPMENT/DESIGN REQUIREMENTS

4.1 Design in Conformance with Scope of Development, Authority Housing Design Guidelines and Approved Project Documents.

As of the date of this Agreement, the Borrower has caused all Project Documents to be consistent with the Scope of Development and CRA/LA's Multifamily Housing Design Guidelines.

4.2 Project Documents.

The Borrower shall cause its architect to proceed diligently to prepare Project Documents for the proposed Project, consistent with the Scope of Development and the Housing Development Guidelines, including, without limitation, such drawings as may reasonably be required to show the location, bulk, height and other principal external features of the proposed Project. In connection with its submittal to the Authority for its approval, the Borrower shall provide to the Authority such elevations, sections, plot plans, specifications, diagrams and other Project Documents as may reasonably be required by the Authority for its review.

4.3 Design and Construction Documents Compliance with Federal Law.

a. Disabled Access Requirements. Prior to commencement of construction, the Project Architect shall certify to Authority that such Final Construction Drawings have been prepared so that the Project shall comply with all applicable disabled access requirements as of the date of the certification.

b. Federal Funds Disclosure. If Federal Funds (e.g., CDBG, HOME, etc.) are a source of funding for any part of the Project, the Final Construction Drawings

shall be prominently stamped with the following disclosure in a font no smaller than 12 point:

> "**THIS PROJECT IS PUBLICLY FINANCED WITH FEDERAL FUNDING AND MUST COMPLY WITH THE REQUIREMENTS OF SECTION 504 OF THE REHABILITATION ACT OF 1973 AND ALL IMPLEMENTING REGULATIONS AND REQUIREMENTS**."

4.4 Project Approvals.

As of the date of this Agreement, the Authority has approved the Project Documents.

4.5 New Material Changes.

Authority shall have the right, in its sole discretion, to disapprove any material changes which are not logical progressions from previously approved Project Documents or which raise material concerns that were not reviewable in previously approved Project Documents in accordance with the Amended DDA and the Ground Lease.

4.6 Reserved.

4.7 No Change in Project Documents.

The Borrower shall not make any changes to approved Project Documents nor shall Borrower consent to any construction contract change orders that would change any approved Project Documents in any material manner, without the prior written approval of the Authority in accordance with the applicable provisions of the Amended DDA and the Ground Lease.

4.8 Permits and Approvals.

Within the time specified in the Schedule of Performance, Borrower shall obtain all permits and approvals necessary to construct the Project including demolition and Building Permits. All applications for such permits and approvals shall be consistent with the approved Project Documents. The Borrower shall not obtain a Building Permit until the Authority has approved the Final Construction Drawings. The Borrower acknowledges that execution of this Agreement by the Authority does not constitute approval by the City of any required permits, applications, or allocations, and in no way limits the discretion of the City in the entitlement, permit and approval process. This Agreement does not (a) grant any land use entitlement to Borrower; (b) supersede, nullify or amend any condition which may be imposed by the City in connection with any approval of the Project; (c) guarantee to Borrower or any other person or entity any profits from the development of the Site; or (d) amend any City laws, codes or rules. This is not a Development Agreement as provided in Government Code Section 65864.

4.9 Zoning and Land Use Requirements.

It shall be the responsibility of the Borrower at the Borrower's sole cost and expense, to ensure that the zoning of the Site and all applicable land use requirements of the City of Los Angeles permit the development and use of the Site in accordance with the provisions of this Agreement. The Authority shall cooperate in good faith with the Borrower in seeking any City approvals necessary for the construction of the Improvements.

4.10 Authority Review.

Authority shall not be responsible for any aspects of Borrower's conduct in connection with the Project, including, but not limited to, the quality and suitability of the Project Documents, the supervision of construction work, and the qualifications, financial condition, and performance of all architects, engineers, contractors, subcontractors, suppliers, consultants, and property managers. Any review or inspection undertaken by the Authority with reference to the Project is solely for the purpose of determining whether the Borrower is properly discharging its obligations to the Authority, and shall not be relied upon by the Borrower or by any third parties as a warranty or representation by the Authority as to the quality of the design or construction of the Project.

ARTICLE 5. CONSTRUCTION OF THE IMPROVEMENTS.

The provisions of this Article 5 are intended to apply only after the Closing, if at all.

5.1 Commencement of Construction.

The Borrower shall commence construction of the Improvements within the time set forth in the Schedule of Performance attached to the Third Amendment of the Amended DDA. Before commencement of construction, Borrower and its general contractor, if any, shall meet with CRA/LA's Office of Audits and Compliance to hold a preconstruction meeting as provided in Section 5.13.c. of this Agreement.

5.2 Completion of Construction.

The Borrower shall prosecute to completion, with diligence that is reasonable under all the circumstances, the construction of the Improvements, and shall complete or cause to be completed the construction of the Improvements within the time set forth in the Schedule of Performance attached to the Third Amendment of the Amended DDA. As between the Authority and the Borrower, the Borrower shall be solely responsible for the construction of the Improvements.

5.3 Construction Pursuant to Scope and Plans.

a. The Borrower shall construct the Improvements in accordance with the Scope of Development, the approved Final Construction Drawings, and the terms and conditions of all City and other governmental approvals.

b. Any proposed material variation from the previously approved Final Construction Drawings shall be submitted to the Authority for approval by the Authority in accordance with the applicable requirements of the Amended DDA and the Ground Lease.

c. Borrower shall comply with all orders to comply with building codes and other governmental health and safety regulations. Any change from Approved Final Construction Drawings which is required for compliance with building codes or other government health and safety regulations shall not be deemed a material change for purposes of Section 4.5 and this Section 5.3. However, the Borrower shall submit to the Authority any proposed change that is required for such compliance as soon as possible, but in any event prior to the commencement of any such work, and such change shall become a part of the approved Final Construction Drawings, binding on the Borrower. Any increase in Total Development Costs resulting from any such change shall be the obligation of Borrower. Authority shall have the right in its sole discretion, but not the obligation, to impose conditions on Borrower's performance of any such changes that are reasonable in light of all the circumstances.

d. Throughout the construction of the Improvements, Authority shall have the right in its discretion, but not the obligation, to inspect the Project as provided in Section 5.10 of this Agreement, and, to the extent permitted by any Inter-creditor Agreement, to review and provide comments to other lenders regarding the disbursement of construction sources of financing.

5.4 Certificate of Completion.

a. Within ten (10) Business Days after written request by Borrower following completion of the construction of the Improvements in accordance with the Scope of Development and Final Construction Drawings (as the same may have been revised with the written approval of the Authority Designated Representative or designee pursuant to Section 5.3 of this Agreement), and (if applicable) upon Borrower's obtaining a certificate of occupancy or temporary certificate of occupancy from the City, Authority shall deliver to Borrower a Certificate of Completion.

b. Authority shall not unreasonably withhold any such Certificate of Completion but shall not be obligated to issue such Certificate until construction of the Improvements has been completed in accordance with all the terms of this Agreement. Such Certificate of Completion shall be, and shall so state, conclusive determination of satisfactory completion of the construction obligations set forth in Article 4 and Sections 5.1 through 5.3, inclusive, of this Agreement. In the event any requirements of this Agreement relating to the construction of the Improvements have not been fully satisfied by Borrower as of the date of Borrower's request for a Certificate of Completion, the Authority Designated Representative or designee may deny Borrower's request for a

Certificate of Completion or issue the Certificate of Completion subject to such conditions subsequent as the Authority Designated Representative or designee may deem necessary to ensure full satisfaction with all the requirements of this Agreement.

c. The Certificate of Completion shall be in such form as to permit it to be recorded in the Office of the Recorder of Los Angeles County. If Authority fails to deliver the Certificate of Completion within ten (10) Business Days after written request from Borrower, Authority shall provide Borrower with a written statement of its reasons (the "Statement of Reasons") within that ten (10)-Business Day period. The statement shall also set forth the actions Borrower must take to be entitled to obtain the Certificate of Completion. If the reasons are confined to the immediate unavailability of specific items or materials for landscaping, or to so-called "punch list" items identified by Authority, Authority shall issue the Certificate of Completion upon the delivery of a bond or letter of credit by Borrower with Authority in an amount representing Authority's estimate of the cost to complete the work, or other security deemed sufficient by the Authority Designated Representative or designee to ensure completion of the work. Notwithstanding any other provision of this Agreement, the failure by Authority to issue a Certificate of Completion within any period of time after request by Borrower shall not be deemed to constitute Authority's concurrence that construction of the Improvements has been completed as required by this Agreement.

d. Such Certificate of Completion shall not constitute evidence of compliance with or satisfaction of any obligation of Borrower to any Senior Lender, or any insurer of a mortgage securing money loaned to finance the Improvements, or any other person or entity. Such Certificate of Completion is not notice of completion as referred to in Section 8182 of the California Civil Code. Such Certificate of Completion shall not be deemed to constitute completion or satisfaction of any obligations of the Borrower under the Authority Loan Documents.

e. As a condition of issuance of the Certificate of Completion, Borrower's construction manager/contractor and architect shall certify that the Project has been constructed in compliance with all applicable disabled access requirements as of the date of the Project's completion (when the last certificate of occupancy is issued).

f. The issuance of the Certificate of Completion, in accordance with the Amended DDA, shall be deemed compliance with the requirements of this Section.

5.5 Compliance with Applicable Law and Authority Policies.

The Borrower shall cause all work performed in connection with construction of the Improvements to be performed in compliance with: (a) all applicable laws, ordinances, rules and regulations of federal, state, county or municipal governments or agencies now in force or that may be enacted hereafter, (including, without limitation, the prevailing wage provisions of Sections 1770 et seq. of the California Labor Code); (b) all directions, rules and regulations of any fire marshal, health officer, building inspector, or other officer of every governmental Authority now having or hereafter acquiring jurisdiction; (c) all applicable disabled access requirements; (d) all applicable

CRA/LA policies as more particularly set forth in the Amended DDA; and (e) all applicable requirements of the Amended DDA and the Ground Lease. The work shall proceed only after procurement of each permit, license, or other authorization that may be required by any governmental agency having jurisdiction, and the Borrower shall be responsible for the procurement and maintenance thereof, as may be required of the Borrower and all entities engaged in work on the Site.

5.6 Reserved.

5.7 Construction Signs.

Prior to the commencement of construction, the Borrower shall prepare and post on the Site construction signs in accordance with Authority's standards for such signs. The construction signs shall identify the Project as one that is being assisted by Authority. The construction signs shall be erected on the Site such that they shall be reasonably visible to the public throughout the construction period.

5.8 Publicity.

The Borrower shall acknowledge Authority in all publicity materials prepared by or on behalf of Borrower concerning the Project.

5.9 Progress Reports.

Until a Certificate of Completion has been issued by the Authority, the Borrower shall provide the Authority with periodic progress reports regarding the status of the construction of the Project and attend conferences on construction status and/or status of compliance with Authority policies and the conditions of this Agreement, as reasonably requested by the Authority, but not more often than monthly.

5.10 Entry by the Authority.

Until a Certificate of Completion has been issued by the Authority, the Borrower shall permit the Authority Representatives to enter the Site at all reasonable times and upon reasonable notice to inspect the work of construction to determine that such work is in conformity with the Scope of Development, the approved Final Construction Drawings and the Project Budget, or to inspect the Site for compliance with this Agreement. Except in the event of inspections regarding safety or compliance with Authority policies, reasonable notice shall mean at least 48 hours written notice. The Authority shall be under no obligation to (a) supervise construction, (b) inspect the Site or (c) inform the Borrower of information obtained by the Authority during any inspection. The Borrower shall not rely upon the Authority for any supervision or inspection. The rights granted to the Authority pursuant to this section are in addition to any rights of entry and inspection the City may have in exercising its municipal regulatory authority.

5.11 Mechanics' Liens.

The Borrower shall indemnify the Authority and hold the Authority harmless against and defend the Authority in any proceeding related to any mechanic's lien, stop notice or other claim brought by a subcontractor, laborer or material supplier who alleges having supplied labor or materials in the course of the construction of the Project by the Borrower. This indemnity obligation shall survive the issuance of a Certificate of Completion by the Authority, repayment of the Authority Loan, reconveyance of the Authority Loan Deed of Trust, Agreement Containing Covenants and Notice of Affordability Restrictions and the termination of this Agreement.

5.12 Non-Discrimination During Construction; Equal Opportunity.

The Borrower, for itself, its successors and assigns, and transferees agrees that in the construction of the Project provided for in this Agreement:

a. The Borrower shall not discriminate against any employee or applicant for employment because of race, color, religion, creed, national origin, ancestry, disability, actual and perceived, medical condition, age, marital status, sex, sexual orientation, Acquired Immune Deficiency Syndrome (AIDS), actual or perceived, or retaliation for having filed a discrimination complaint or any additional basis listed in subdivision (a) or (d) of Section 12955 of the Government Code, as those bases are defined in Sections 12926, 12926.1, subdivision (m) and paragraph (1) of subdivision (p) of Section 12955 and Section 12955.2 of the Government Code, as such provisions may be amended from time to time (collectively, the "Nondiscrimination Factors"). The Borrower shall take affirmative steps to ensure that applicants are employed by the Borrower, and that its employees are treated without regard to the Nondiscrimination Factors during employment including, but not limited to, activities of: upgrading, demotion or transfer; recruitment or recruitment advertising, layoff or termination; rates of pay or other forms of compensation; and selection for training, including apprenticeship. The Borrower agrees to post in conspicuous places, available to its employees and applicants for employment, the applicable nondiscrimination clause set forth herein.

b. The Borrower shall ensure that its solicitations or advertisements for employment are in compliance with the aforementioned nondiscrimination factors; and

c. The Borrower shall cause the foregoing provisions to be inserted in all contracts for the construction of the Project entered into by the Borrower after the Effective Date of this Agreement and shall ensure that its general contractor shall insert the foregoing provisions in the general contractor's subcontracts; provided, however, that the foregoing provisions shall not apply to contracts or subcontracts for standard commercial supplies or raw materials.

d. For purposes of this Section 5.12, the term "Borrower" shall mean and include the Borrower and the Borrower's general contractor and subcontractors of any tier engaged by Borrower in the construction of the Project.

5.13 Affirmative Outreach in Contracting Procedures and Employment, Including Utilization of Project Area, Minority, Women and Other Businesses and Persons.

a. Use of Disadvantaged and Local Businesses. The parties hereby acknowledge that California Health and Safety Code Section 33422.1 provides: "To the greatest extent feasible, contracts for work to be performed in connection with any redevelopment project shall be awarded to business concerns which are located in, or owned in the substantial part by persons residing in, the project area." Therefore, in consideration of the assistance provided to the Project by Authority, Borrower hereby agrees:

i. To the greatest extent feasible, Borrower shall seek out and award and require the award of contracts and subcontracts for development of the Site to contracting firms which are located or owned in substantial part by persons residing in the Redevelopment Project Area, and to promote outreach to minority-owned, women-owned and other businesses. This requirement applies to both the construction and operation of the Improvements.

ii. This paragraph shall require significant efforts of the Borrower and its contractors but shall not require the hiring of any person unless such person has the experience and ability, and, where necessary, the appropriate trade union affiliation, to qualify such person for the job.

b. Employment of Project Area Residents. The Parties hereby acknowledge that California Health and Safety Code Section 33422.3 provides: "To insure training and employment opportunities for lower-income project area residents, the agency may specify in the call for bids for any contract over one hundred thousand dollars ($100,000) for work to be performed in connection with any redevelopment project that project area residents, if available, shall be employed for a specified percentage of each craft or type of workmen needed to execute the contract or work." Therefore, in consideration of the assistance provided to the Project by Authority, Borrower agrees as follows:

i. Borrower shall in all general contracts for the construction of the Improvements (and its contractors shall in all subcontracts thereunder), require that to the greatest extent feasible, the labor force in all categories be comprised of residents of the Redevelopment Project Area; and

ii. Borrower and its contractors shall be subject to and shall comply with the terms of the CRA/LA Construction Careers and Project Stabilization Policy, which is attached to the Amended DDA and the Ground Lease. In addition, Borrower shall be subject to and shall comply with the terms of the PLA.

c. Community Outreach Plan.

i. Submission of Plan: By the date set forth in the Schedule of Performance, the Borrower shall meet with the Authority or the Authority Designated Representative to hold a preconstruction meeting. During the preconstruction meeting, the Borrower shall be provided with the policies and procedures of the Authority regarding outreach efforts, including the development of a community outreach plan (containing the items described in paragraph c.(2), below). At the preconstruction meeting, Authority shall provide to the Borrower samples of community outreach plans which would be acceptable to the Authority. Prior to commencing construction, the Borrower shall submit to the Authority, or the Authority Designated Representative , for approval or disapproval, a community outreach plan for the Project (the "Community Outreach Plan"). The Community Outreach Plan shall set forth the methods the Borrower shall use to comply with this Section 5.13. Upon receipt of the Community Outreach Plan, the Authority shall, within twenty (20) Business Days, approve or disapprove the Community Outreach Plan, or provide to the Borrower a statement of actions required to be taken in order for the Community Outreach Plan to be approved. If the Authority fails to respond within such twenty (20) Business Day period, the Community Outreach Plan shall be deemed disapproved by the Authority. The Borrower shall not commence construction unless the Community Outreach Plan has been approved by the Authority.

ii. Contents of the Community Outreach Plan: The Community Outreach Plan shall include, at a minimum:

(a) Estimated total dollar amount (by trade) of all contracts and subcontracts to be let by the Borrower or its prime contractor for the Improvements;

(b) List of all proposed contractors to be awarded a contract by the Borrower or the prime contractor(s);

(c) Estimated dollar value of all proposed contracts;

(d) Evidence of M/WBE Certification of all firms listed as MBE or WBE in the Community Outreach Plan. Firms purporting to be M/WBE do not require M/WBE Certification if their contract amount is less than Twenty Five Thousand Dollars ($25,000). Any firm for which the contract amount exceeds Twenty Five Thousand Dollars ($25,000) and which is not certified by the City of Los Angeles may not be considered an MBE or WBE for purposes of this Agreement;

(e) Description of the actions to be taken to meet the project area resident and business utilization objectives; and

(f) Such other information and documentation with respect to the foregoing objectives as the Authority may reasonably deem necessary.

d. General Information. During the construction of the Improvements, the Borrower shall provide to the Authority such information and documentation as reasonably requested by the Authority to carry out this Section 5.13. The Borrower shall monitor and enforce the affirmative outreach and equal opportunity requirements set forth in this Agreement. In the event the Borrower fails to monitor or enforce these requirements, the Authority may declare the Borrower in default of this Agreement (subject to the notice and cure rights provided in this Agreement) and thereafter pursue any of the remedies available under this Agreement.

5.14 Cost of Development.

Borrower shall bear all costs and expenses incurred in connection with the construction and maintenance of all Improvements, including, without limitation, all costs incurred in connection with the investigation, acquisition and preparation of the Site for development, all off-site improvements, building and developer fees, and all costs of investigation, acquisition and/or preparation of any Project Documents or other submissions made by Borrower pursuant to this Agreement. Borrower shall pay when due, and shall cause its general contractor to pay when due, all valid invoices for materials, equipment, labor and services incurred in connection with the development of the Project.

5.15 Prevailing Wages.

a. The Borrower shall pay or cause to be paid to all workers employed in connection with the development of the Improvements, not less than the prevailing rates of wages, as provided in the statutes applicable to Authority public work contracts, including without limitation Sections 33423-33426 of the California Health and Safety Code and Sections 1770-1780 of the California Labor Code, in accordance with the CRA/LA's Policy on Payment of Prevailing Wages By Private Redevelopers or Owner-Participants dated February 1986, attached to the Amended DDA and the Ground Lease, receipt of which is hereby acknowledged. In addition to any restitution required by the CRA/LA's Policy and/or applicable law, any developer or owner determined by the Authority to have violated any provision of the CRA/LA's Policy, shall forthwith pay the following as a penalty to the Authority or the State of California, if directed:

i. Payment of less than prevailing wages: Fifty Dollars ($50) per calendar day, or portion thereof, for each worker paid less than prevailing wages;

ii. Failure to provide all reasonably requested records and/or provide access to job site or workers: Five Thousand Dollars ($5,000) per calendar day, or portion thereof.

b. If the construction work covered under this Agreement is financed in whole or in part with assistance provided under a program of the U.S. Department of Housing and Urban Development or some other source of federal funding, the Borrower shall comply with or cause its general contractor and all subcontractors to comply with the requirements of the Davis-Bacon Act (40 U.S.C. 276 et. seq.). The Davis-Bacon Act

requires the payment of wages to all laborers and mechanics at a rate not less than the minimum wage specified by the Secretary of Labor in periodic wage rate determinations as described in the Federal Labor Standards Provisions (HUD-4010). In the event both State Prevailing wages and Davis-Bacon Act wages shall be required, all works shall be paid at the higher of the two wage rates.

c. Prior to the commencement of construction, and as soon as practicable in accordance with the Schedule of Performance, the Borrower shall contact the Authority to schedule a preconstruction orientation meeting with the Borrower and with the general contractor to explain such matters as the specific rates of wages to be paid to workers in connection with the development of the Improvements, preconstruction conference requirements, record keeping and reporting requirements necessary for the evaluation of the Borrower's compliance with this Section 5.15.

d. Borrower shall monitor and enforce the prevailing wage requirements imposed on its contractors and subcontractors, including withholding payments to those contractors or subcontractors who violate these requirements. In the event that Borrower fails to monitor or enforce these requirements against any contractor or subcontractor, Borrower shall be liable for the full amount of any underpayment of wages, plus costs and attorneys' fees, as if Borrower was the actual employer, and the Authority or the State Department of Industrial Relations may withhold monies owed to the Borrower, may impose penalties on Borrower in the amounts specified herein, may take action directly against the contractor or subcontractor as permitted by law, and/or may declare the Borrower in default of this Agreement (subject to the notice and cure rights provided in this Agreement) and thereafter pursue any of the remedies available under this Agreement.

e. Any contractor or subcontractor who is at the time of bidding debarred by the Labor Commissioner pursuant to Section 1777.1 of the California Labor Code is ineligible to bid on the construction of the Improvements or to receive any contract or subcontract for work covered under this Agreement. The Borrower agrees to include, or cause to be included, this paragraph (e) in all bid specifications for work covered under this Agreement.

f. Any contractor or subcontractor who, at the time of the date of this Agreement, is listed in the Lists of Parties Excluded From Federal Procurement or Nonprocurement Programs issued by the U.S. General Services Administration pursuant to Section 3(a) of the Davis-Bacon Act is ineligible to receive a contract for work covered under this Agreement, if the covered work is Federally funded in whole or in part.

g. Any contractor or subcontractor that is at the time of bidding debarred or declared non-responsible under the Authority's Contractor Responsibility Policy or the City's Contractor Responsibility Ordinance is ineligible to bid on the construction of the Improvements or to receive any contract or subcontract for work covered under this Agreement. Borrower agrees to include, or cause to be included, this paragraph (g) in all bid specifications for work covered under this Agreement.

h. Borrower agrees to include, or cause to be included, the above provisions in all bid specifications for work covered under this Agreement.

i. Borrower shall indemnify, hold harmless and defend (with counsel reasonably acceptable to the Authority) the Authority Indemnified Parties against any claim for damages, compensation, fines, penalties or other amounts arising out of the failure or alleged failure of any person or entity (including Borrower, its contractor and subcontractors) to pay prevailing wages as determined pursuant to Labor Code Sections 1720 et seq. and implementing regulation or comply with the other applicable provisions of Labor Code Sections 1720 et seq. and implementing regulations of the Department of Industrial Relations in connection with construction of the improvements or any other work undertaken or in connection with the Site. This indemnity obligation shall survive the issuance of a Certificate of Completion by the Authority, repayment of the Authority Loan, reconveyance of the Authority Loan Deed of Trust, Agreement Containing Covenants and Notice of Affordability Restrictions and the termination of this Agreement.

j. For purposes of this Section 5.15, the terms "contractor" and "subcontractor" shall have the meaning set forth in the CRA/LA Prevailing Wage Policy.

ARTICLE 6. USE OF THE SITE AND BORROWER OBLIGATIONS DURING AND AFTER CONSTRUCTION

6.1 Uses.

Borrower covenants and agrees for itself, its successors, its assigns and every successor in interest to the Site or any part thereof, that Borrower, such successors and such assignees shall use the Site only for the uses specified in the Redevelopment Plan, this Agreement (including the Scope of Development), and the Agreement Containing Covenants. No change in the use of the Site shall be permitted without the prior written approval of Authority.

6.2 Affordability.

The Borrower hereby agrees that, for the term of the Agreement Containing Covenants, the Affordable Units within the Improvements shall be used only for residential uses consistent with the Agreement Containing Covenants. All of the housing units in the Project (other than the resident manager's unit) shall be made available and rented exclusively to Eligible Households in the income categories and at rents that do not exceed the respective affordability levels set forth in the Agreement Containing Covenants. The Affordable Units shall, to the maximum extent feasible, be comparable to any unrestricted units within Phase IIB with the same number of rooms, in terms of size, location and amenities.

6.3 Allowable Rent.

For the term of the Agreement Containing Covenants, Borrower shall not charge rent for an Affordable Unit that exceeds the applicable Affordable Rent for the income level of a Household that is eligible to rent that Affordable Unit (i.e., rent for a Very Low Income Unit shall not exceed a Very Low Income Rent, etc.), as set forth more specifically in the Agreement Containing Covenants.

6.4 Maintenance of the Property.

At all times after the Effective Date of this Agreement and prior to the completion of construction, Borrower shall secure and maintain the Site or cause the Site to be secured and maintained in a safe, neat and orderly condition to the extent practicable and in accordance with industry health and safety standards for construction sites. Upon and at all times after completion of construction, the Project shall be well maintained as to both external and internal appearance of all buildings, landscaping, common areas, and parking areas, conforming to the best practices of operators of comparable Authority-assisted affordable housing, and the requirements set forth in the Agreement Containing Covenants, if any, for the term of that agreement.

6.5 Management Requirements.

a. Operations and Maintenance. Borrower shall operate and maintain the Project in accordance with all applicable federal, state and local laws and rules and the management requirements set forth in the Agreement Containing Covenants and provide for the operation of the Project in a manner satisfactory to the Authority pursuant to the Management Plan (defined in the Agreement Containing Covenants). Not later than the time specified in the Schedule of Performance, the Borrower shall submit to the Authority Designated Representative or designee for written approval, a Management Plan for the Project. The Borrower shall submit the Management Plan and all necessary supporting information in such time to permit the Authority Designated Representative or designee to approve, disapprove or comment on the Management Plan twenty (20) Business Days prior to the completion of construction. The Management Plan, including such amendments as may be approved by the Authority Designated Representative or designee, shall remain in effect for the term of the Authority Loan or the term of the Agreement Containing Covenants, whichever is longer.

b. Just Cause Evictions. Borrower shall include the following provision in all tenant leases and rental agreements for the Project:

> "Owner may not terminate the tenancy or refuse to renew this lease or rental agreement except for good cause. The term "good cause" shall mean a serious or repeated violation of the material terms and conditions of the lease, or a violation of applicable federal, state or local law. To terminate the tenancy or refuse to renew the lease, Owner must provide written notice to the tenant of the grounds with sufficient specificity to enable to the tenant to prepare a defense. The notice must be served at least three Business Days before the termination of tenancy, and must

comply with all requirements of California law and other applicable programs. Tenant has the right to enforce this requirement in state court, including presenting a defense to any eviction action brought by Owner."

6.6 Obligation to Refrain from Discrimination.

a. Borrower covenants and agrees for itself, its successors and its assigns in interest to the Site or any part thereof, that there shall be no discrimination against or segregation of any person or persons on any basis listed in subdivision (a) or (d) of Section 12955 of the Government Code, as those bases are defined in Sections 12926, 12926.1, subdivision (m) and paragraph (1) of subdivision (p) of Section 12955, and Section 12955.2 of the Government Code. All deeds, leases, or contracts for the sale, lease, sublease, or other transfer of the Site shall contain or be subject to the nondiscrimination or non-segregation clauses hereafter prescribed.

b. Notwithstanding subdivision (a), with respect to familial status, subdivision (a) shall not be construed to apply to housing for older persons, as defined in Section 12955.9 of the Government Code. With respect to familial status, nothing in subdivision (a) shall be construed to affect Sections 51.2, 51.3, 51.4, 51.10, 51.11, and 799.5 of the Civil Code, relating to housing for senior citizens. Subdivision (d) of Section 51 and Section 1360 of the Civil Code and subdivisions (n), (o), and (p) of Section 12955 of the Government Code shall apply to subdivision (a).

6.7 Form of Nondiscrimination and Nonsegregation Clauses.

Borrower shall refrain from restricting the rental, sale or lease of the Site as provided in Section 6.6, above. All deeds, leases or contracts for the sale, lease, sublease, or other transfer of the Site entered into after the date on which this Agreement is executed by Authority shall contain or be subject to substantially the following nondiscrimination or non-segregation clauses:

a.

i. In deeds the following language shall appear--"The grantee herein covenants by and for himself or herself, his or her heirs, executors, administrators, and assigns, and all persons claiming under or through them, that there shall be no discrimination against or segregation of, any person or group of persons on account of any basis listed in subdivision (a) or (d) of Section 12955 of the Government Code, as those bases are defined in Sections 12926, 12926.1, subdivision (m) and paragraph (1) of subdivision (p) of Section 12955, and Section 12955.2 of the Government Code, in the sale, lease, sublease, transfer, use, occupancy, tenure, or enjoyment of the premises herein conveyed, nor shall the grantee or any person claiming under or through him or her, establish or permit any practice or practices of discrimination or segregation with reference to the selection, location, number, use or occupancy of tenants, lessees, subtenants, sub-lessees, or vendees in the premises herein conveyed. The foregoing covenants shall run with the land."

ii. Notwithstanding paragraph (1), with respect to familial status, paragraph (1) shall not be construed to apply to housing for older persons, as defined in Section 12955.9 of the Government Code. With respect to familial status, nothing in paragraph (1) shall be construed to affect Sections 51.2, 51.3, 51.4, 51.10, 51.11, and 799.5 of the Civil Code, relating to housing for senior citizens. Subdivision (d) of Section 51 and Section 1360 of the Civil Code and subdivisions (n), (o), and (p) of Section 12955 of the Government Code shall apply to paragraph (1).

b.

i. In leases the following language shall appear--"The lessee herein covenants by and for himself or herself, his or her heirs, executors, administrators, and assigns, and all persons claiming under or through him or her, and this lease is made and accepted upon and subject to the following conditions: That there shall be no discrimination against or segregation of any person or group of persons, on account of any basis listed in subdivision (a) or (d) of Section 12955 of the Government Code, as those bases are defined in Sections 12926, 12926.1, subdivision (m) and paragraph (1) of subdivision (p) of Section 12955, and Section 12955.2 of the Government Code, in the leasing, subleasing, transferring, use, occupancy, tenure, or enjoyment of the premises herein leased nor shall the lessee himself or herself, or any person claiming under or through him or her, establish or permit any such practice or practices of discrimination or segregation with reference to the selection, location, number, use, or occupancy, of tenants, lessees, sub-lessees, subtenants, or vendees in the premises herein leased."

ii. Notwithstanding paragraph (1), with respect to familial status, paragraph (1) shall not be construed to apply to housing for older persons, as defined in Section 12955.9 of the Government Code. With respect to familial status, nothing in paragraph (1) shall be construed to affect Sections 51.2, 51.3, 51.4, 51.10, 51.11, and 799.5 of the Civil Code, relating to housing for senior citizens. Subdivision (d) of Section 51 and Section 1360 of the Civil Code and subdivisions (n), (o), and (p) of Section 12955 of the Government Code shall apply to paragraph (1).

c. In contracts entered into by Authority relating to the sale, transfer, or leasing of land or any interest therein acquired by Authority within any survey area or redevelopment project the foregoing provisions in substantially the forms set forth shall be included and the contracts shall further provide that the foregoing provisions shall be binding upon and shall obligate the contracting party or parties and any subcontracting party or parties, or other transferees under the instrument.

6.8 Barriers to the Disabled.

a. Compliance with all Accessibility Requirements. Borrower shall comply with all applicable requirements of state, local and federal rules, laws and regulations relating to accessibility and reasonable accommodations for persons with disabilities, including, without limitation, the following to the extent any are applicable to the Project: Section 504 of the Rehabilitation Act of 1973 (29 U.S.C. Section 794 and

implementing regulations at 24 CFR Part 8); the Americans with Disabilities Act (42 U.S.C. Sections 12131 *et seq*. and 12181 *et seq*., and implementing regulations at 28 CFR Parts 35 and 36); the Fair Housing Act (42 U.S.C. Section 3601 *et seq.*, and implementing regulations at 24 CFR Part 100); the Fair Employment and Housing Act (California Government Code Section 12926); and Title 24 of the California Building Code. Without limiting the generality of the foregoing,

i. residential and nonresidential projects that involve new construction or rehabilitation of existing buildings and that are financed in whole or in part with federal funds (e.g. CDBG, HOME) shall comply with all applicable requirements of Section 504 of the Rehabilitation Act of 1973 and all other applicable requirements;

ii. projects that receive Authority or other nonfederal sources of funding shall comply with all applicable requirements of the Americans with Disabilities Act, the Fair Housing Act, the Fair Employment and Housing Act, Title 24 of the California Building Code, and all other applicable requirements;

iii. commercial structures, and common areas and public use areas in residential projects, shall comply with all applicable requirements of the Americans with Disabilities Act, Title 24 of the California Building Code and all other applicable requirements.

Borrower shall ensure that construction plans submitted for review by the City and/or Authority comply with all applicable requirements of law and that Project construction is carried out in conformity with approved plans.

b. ADA Certification. Borrower hereby certifies as follows:

i. Borrower is in compliance with and shall continue to comply with the Americans with Disabilities Act, 42 U.S.C. 12101 et seq. and its implementing regulations.

ii. Borrower shall provide for reasonable accommodations to allow qualified individuals with disabilities to have access to and participate in its programs, services and activities in accordance with the provisions of the Americans with Disabilities Act.

iii. Borrower shall not discriminate against persons with disabilities nor against persons due to their relationship or association with a person with a disability.

iv. Borrower shall require that the language of this Section 6.8 be included in the award documents for all sub-awards at all tiers (including subcontracts, and contracts under grants, loans and cooperative agreements) and that all subcontractors shall certify and disclose accordingly.

v. The certification set forth in this Section is a material representation of fact upon which reliance was placed when the Parties entered into this transaction.

6.9 Effect and Duration of Covenants.

The covenants established in this Article 6 shall run with the land, without regard to technical classification and designation, and shall be for the benefit and in favor of and enforceable against the original Borrower and successors in interest by Authority or the City. The covenants described in this Article 6 shall commence upon execution of this Agreement, shall be set forth in the Agreement Containing Covenants and shall remain in effect for the respective periods specified therein.

6.10 Agreement Containing Covenants.

Prior to the Closing and disbursement of any portion of the Authority Loan, Borrower and Authority shall execute the Agreement Containing Covenants and Notice of Affordability Restrictions, which shall be recorded against the Site upon the Closing, prior to or concurrently with the first disbursement of Authority Loan proceeds.

6.11 Monitoring.

a. The parties acknowledge that this Agreement is subject to the provisions of Section 33418(a) of the California Health and Safety Code, which provides in pertinent part:

> "An Agency shall monitor, on an ongoing basis, any housing affordable to persons and families of low or moderate income developed or otherwise made available pursuant to any provisions of this part. As part of this monitoring, an Agency shall require owners or managers of the housing to submit an annual report to the Agency. The annual reports shall include for each rental unit the rental rate and the income and family size of the occupants... The income information required by this section shall be supplied by the tenant in a certified statement of a form provided by the Agency."

b. Borrower, on behalf of itself, its successors and assigns, covenants and agrees to submit an annual report to Authority containing, for each Affordable Unit, the rental rate and the income and family size of the occupants. Authority shall provide the format to be used.

6.12 Indemnity.

a. Borrower shall indemnify, defend (with counsel approved by Authority) and hold harmless the Authority Indemnified Parties from and against any and all liabilities, losses, costs, expenses (including without limitation attorneys' fees and costs of litigation), claims, demands, actions, suits, causes of action, writs, judicial

or administrative proceedings, penalties, deficiencies, fines, orders, judgments and damages (all of the foregoing collectively "Claims") which in any manner, directly or indirectly, in whole or in part, are caused by, arise in connection with, result from, relate to, or are alleged to be caused by, arise in connection with, result from, or relate to: (i) approval of this Loan Agreement and/or the Improvements; (ii) performance of this Loan Agreement on the part of the Borrower or any contractor or subcontractor of Borrower; and/or (iii) the construction, operation, maintenance or management of the Improvements, whether or not any insurance policies shall have been determined to be applicable to any such Claims. It is further agreed that Authority does not and shall not waive any rights against Borrower which it may have by reason of this indemnity and hold harmless agreement because of the acceptance by Authority, or Borrower's deposit with Authority of any of the insurance policies described in this Agreement.

b. Borrower shall pay immediately upon the Authority Indemnified Parties' demand any amounts owing under this indemnity. The duty of Borrower to indemnify includes the duty to defend the Authority Indemnified Parties or, at the Authority Indemnified Parties' choosing, to pay the Authority Indemnified Parties' costs of its defense in any court action, administrative action, or other proceeding brought by any third party arising from the Improvements or the Site. The Authority Indemnified Parties may make all reasonable decisions with respect to their representation in any legal proceeding, including, but not limited to, the selection of attorney(s). Borrower's obligations set forth in this Section shall survive the issuance of the Certificate of Completion by Authority, repayment of the Authority Loan and the reconveyance of the Authority Loan Deed of Trust, Agreement Containing Covenants and Notice of Affordability Restrictions, and termination of this Agreement. Borrower's indemnification obligations set forth in this Section 6.12 shall not apply to Claims arising solely from the gross negligence or willful misconduct of the Authority Indemnified Parties.

c. The obligations of the Borrower under this Section shall expressly survive the expiration of the Term, and/or the termination or expiration of this Agreement.

6.13 Insurance Coverage.

Borrower shall furnish or cause to be furnished to the Authority duplicate originals or certified copies of the insurance policies, complete with additional insured and loss payee endorsements in accordance with all applicable requirements of the Amended DDA and the Ground Lease.

6.14 Insurance Advances.

In the event Borrower fails to maintain or cause to be maintained the full insurance coverage required by this Loan Agreement, the Authority, after at least five (5) Business Days prior notice to Borrower, may, but shall be under no obligation to, take out the required policies of insurance and pay the premiums on such policies. Any amount so advanced by the Authority, together with interest thereon from the date of such advance at the highest rate of interest then allowed by applicable law, shall

become an additional obligation of Borrower to the Authority and shall be secured by the Authority Loan Deed of Trust.

6.15 Hazardous Materials.

a. The Borrower hereby covenants and agrees that:

i. Borrower shall not knowingly permit the Site or any portion thereof to be a site for the use, generation, treatment, manufacture, storage, disposal or transportation of Hazardous Materials or otherwise knowingly permit the presence of Hazardous Materials in, on or under the Site in violation of any applicable law;

ii. The Borrower shall keep and maintain the Project and each portion thereof in compliance with, and shall not cause or permit the Project or any portion thereof to be in violation of any Hazardous Materials Laws;

iii. Upon receiving actual knowledge of the same, the Borrower shall within ten (10) days advise the Authority in writing of: (A) any and all enforcement, cleanup, removal or other governmental or regulatory actions instituted or threatened against the Borrower or the Project pursuant to any applicable Hazardous Materials Laws; (B) any and all claims made or threatened by any third party against the Borrower or the Project relating to damage, contribution, cost recovery, compensation, loss or injury resulting from any Hazardous Materials (the matters set forth in the foregoing clause (A) and this clause (B) are hereinafter referred to as "Hazardous Materials Claims"); (C) the presence of any Hazardous Materials in, on or under the Site in such quantities which require reporting to a government agency; or (D) the Borrower's discovery of any occurrence or condition on any real property adjoining or in the vicinity of the Project classified as "border zone property" under the provisions of California Health and Safety Code, Sections 25220 et seq., or any regulation adopted in accordance therewith, or to be otherwise subject to any restrictions on the ownership, occupancy, transferability or use of the Project under any Hazardous Materials Laws. If the Authority reasonably determines that the Borrower is not adequately responding to a written directive or order from a regulatory body or court regarding a Hazardous Material Claim, the Authority shall have the right, upon ten (10) Business Days written notice to the Borrower, to join and participate in, as a party if it so elects, any legal proceedings or actions initiated in connection with any such Hazardous Materials Claims and, if such claim could result in any liability or damage to the Authority, to have its reasonable attorney's fees in connection therewith paid by the Borrower.

iv. As long as the Authority Loan is outstanding, the Borrower shall not take, without the Authority's prior written consent, which shall not be unreasonably withheld or delayed, any remedial action in response to the presence of any Hazardous Materials on, under, or about the Site (other than in emergency situations or as required by governmental agencies having jurisdiction), nor enter into any settlement agreement, consent decree, or other compromise in respect to any Hazardous Materials Claims.

b. Hazardous Materials Indemnity. Without limiting the generality of the indemnification set forth in Section 6.12, the Borrower hereby agrees to indemnify, protect, hold harmless and defend (by counsel acceptable to the Authority) the Authority Indemnified Parties from and against any and all claims, losses, damages, liabilities, fines, penalties, charges, administrative and judicial proceedings and orders, judgments, remedial action requirements, enforcement actions of any kind, and all costs and expenses incurred in connection therewith (including, but not limited to, reasonable attorney's fees and expenses), arising directly or indirectly, in whole or in part, out of: (1) the failure of the Borrower, its agents, employees, or contractors to comply with any Hazardous Materials Law relating in any way whatsoever to the handling, treatment, presence, removal, storage, decontamination, cleanup, transportation or disposal of Hazardous Materials into, on, under or from the Project; (2) the presence in, on or under the Site of any Hazardous Materials not otherwise present before the Closing or any releases or discharges of any Hazardous Materials into, on, under or from the Project occurring after the Closing; or (3) any activity carried on or undertaken on or off the Project, subsequent to the conveyance of the Site to the Borrower, by the Borrower or any employees, agents, contractors or subcontractors of the Borrower at any time occupying or present on the Project, in connection with the handling, treatment, removal, storage, decontamination, cleanup, transport or disposal of any Hazardous Materials at any time located or present on or under the Project (collectively "Indemnification Claims"). The foregoing indemnity shall further apply to any residual contamination on or under the Project, or affecting any natural resources, and to any contamination of any property or natural resources arising in connection with the generation, use, handling, treatment, storage, transport or disposal of any such Hazardous Materials by the Borrower, and irrespective of whether any of such activities were or will be undertaken in accordance with Hazardous Materials Laws. This indemnity obligation shall survive the issuance of a Certificate of Completion by the Authority, repayment of the Authority Loan, reconveyance of the Authority Loan Deed of Trust, Agreement Containing Covenants and Notice of Affordability Restrictions and the termination of this Agreement. Borrower's liability under this Section 6.15(b) shall not extend to cover the violation of any Hazardous Materials Laws or presence of Hazardous Materials on the Site that first arise, commence or occur after the satisfaction, discharge, release, assignment, termination or cancellation of the Authority Deed of Trust following the payment in full of the Authority Construction and Permanent Note and all other sums payable under the Authority Loan Documents or after the actual dispossession from the entire Site of the Borrower following foreclosure of the Authority Deed of Trust or acquisition of the Site by a deed in lieu of foreclosure.

c. No Limitation. The Borrower hereby acknowledges and agrees that the Borrower's duties, obligations and liabilities under this Agreement, including, without limitation, under Section 6.13, above, are in no way limited or otherwise affected by any information the Authority may have concerning the Site or the Project and/or the presence on or under the Site or within the Project of any Hazardous Materials, whether the Authority obtained such information from the Borrower or from its own investigations.

6.16 Taxes and Assessments.

Borrower shall pay when due prior to delinquency any and all real estate taxes and assessments (including any possessory interest tax) assessed and levied on the Site or any portion thereof and Borrower hereby agrees to indemnify, defend and hold Authority and all Authority Representatives free and harmless against any and all Losses and Liabilities arising from the failure to pay when due such taxes and assessments. Authority shall have the right, but not the obligation, to advance on behalf of Borrower any amounts due as the result of real estate taxes and assessments (including any possessory interest tax) assessed and levied on the Site or any portion thereof. Any amount so advanced by the Authority, together with interest thereon from the date of such advance at the highest rate of interest then allowed by applicable law, shall be due and payable immediately and shall become an additional obligation of Borrower to the Authority secured by the Authority Deed of Trust. This indemnity obligation shall survive the issuance of a Certificate of Completion by the Authority, repayment of the Authority Loan, reconveyance of the Authority Loan Deed of Trust, Agreement Containing Covenants and Notice of Affordability Restrictions and the termination of this Agreement.

6.17 Authority's Living Wage, Contractor/Developer Responsibility, Service Worker Retention, and Equal Benefits Policies.

Borrower and its contractors and subcontractors under this Agreement shall comply with the CRA/LA's Living Wage Policy, CRA/LA's Policy on Contractor Responsibility, CRA/LA's Service Worker (Contractor) Retention Policy, and CRA/LA's Equal Benefits Policy, each of which is attached to the Amended DDA and the Ground Lease, and the receipt of which is hereby acknowledged. All references to "Contractor" in this section and the policies described above mean and include Borrower and its contractors and subcontractors working on the Project, and all references to "Contract" shall mean and include this Agreement.

a. Living Wage and Service (Contractor) Worker Retention Policies

i. This Agreement is subject to the provisions of the CRA/LA's Living Wage Policy ("LWP") and the CRA/LA's Service (Contractor) Worker Retention Policy ("SCWRP"), as amended from time-to-time.

(a) Borrower shall make payment of a minimum initial wage rate to employees as defined in the LWP and as may be adjusted each July 1 and provision of benefits as defined in the LWP.

(b) Borrower further pledges that it shall comply with federal law proscribing retaliation for union organizing and shall not retaliate for activities related to the LWP. Contractor shall require each of its Subcontractors within the meaning of the LWP to pledge to comply with the terms of federal law proscribing retaliation for union organizing. Contractor shall deliver the executed pledges from each such subcontractor to the Authority within ninety calendar days after the execution of

the Subcontract. Contractor's delivery of executed pledges from each such Subcontractor shall fully discharge the obligation of the Contractor to comply with the provision in the LWP concerning compliance with such federal law.

(c) The Contractor, whether an employer, as defined in the LWP, or any other person employing individuals, shall not discharge, reduce in compensation, or otherwise discriminate against any employee for complaining to the Authority with regard to the employer's compliance or anticipated compliance with the LWP, for participating in proceedings related to the LWP, for seeking to enforce his or her rights under the LWP by any lawful means, or otherwise asserting rights under the LWP. Contractor shall post the Notice of Prohibition Against Retaliation.

(c) Any Subcontract entered into by the Contractor relating to this Contract, to the extent allowed hereunder, shall be subject to the provisions of LWP and the SCWRP, and shall incorporate the "Living Wage Policy and Service (Contractor) Worker Retention Policy" language.

(d) Contractor shall comply with all rules, regulations and policies promulgated by the designated administrative agency, which may be amended from time to time.

ii. Under the provisions of the LWP and SCWRP the Authority, on behalf of CRA/LA, shall have the authority, under appropriate circumstances, to terminate this Agreement and otherwise pursue legal remedies that may be available if the Authority determines that the subject Contractor has violated provisions of the LWP and the SCWRP.

iii. Where under the LWP the designated administrative agency has determined (a) that the Contractor is in violation of the LWP in having failed to pay some or all of the living wage, and (b) that such violation has gone uncured, the Authority in such circumstances may impound monies otherwise due the Contractor in accordance with the following procedures. Impoundment shall mean that from monies due the Contractor, the Authority may deduct the amount determined to be due and owing by the Contractor to its employees. Such monies shall be placed in the holding account referred to in LWP and disposed of under procedures there described through final and binding arbitration. Whether the Contractor is to continue work following an impoundment shall remain in the unfettered discretion of the Authority. The Contractor may not elect to discontinue work either because there has been an impoundment or because of the ultimate disposition of the impoundment by the arbitrator.

iv. Earned Income Tax Credit. This Contract is subject to the provision of the LWP requiring employers to inform employees making less than Twelve Dollars ($12.00) per hour of their possible right to the federal Earned Income Tax Credit ("EITC"). Employers must further make available to employees the forms required to secure advance EITC payments from employers.

b. <u>Equal Benefits Policy</u>.

This Agreement is subject to the provisions of the CRA/LA's Equal Benefits Policy ("EBP") as amended from time-to-time.

i. During the performance of this Agreement, the Contractor certifies and represents that it shall comply with the EBP. The Contractor agrees to post the following statement in conspicuous places at its place of business available to employees and applicants for employment:

> "During the performance of a Contract with the Authority, the Contractor shall provide equal benefits to its employees with spouses and its employees with domestic partners. Additional information about the EBP may be obtained from the Office of the City Administrative Officer, Contractor Enforcement Section at (213) 978-7650."

ii. The failure of the Contractor to comply with the EBP shall be deemed to be a material breach of the Agreement.

iii. If the Contractor fails to comply with the EBP the Authority may cancel, terminate or suspend the Agreement, in whole or in part, and all monies due or to become due under the Agreement may be retained by the Authority. The Authority may also pursue any and all other remedies at law or in equity for any breach.

iv. Failure to comply with the EBP may be used as evidence against the Contractor in actions taken pursuant to the provisions of the CRA/LA's Contractor Responsibility Policy.

v. If the Designated Administrative Agency ("DAA") determines that the Contractor has set up or used its Contracting entity for the purpose of evading the intent of the EBP, the DAA may terminate the Agreement on behalf of the Authority. Violation of this provision may be used as evidence against the Contractor in actions taken pursuant to the provisions of CRA/LA's Contractor Responsibility Policy.

c. Contractor/Developer Responsibility Policy.

This Agreement is subject to the provisions of the CRA/LA's Policy on Contractor/Developer Responsibility, as amended from time to time, including applicable portions of Part A (Contractor Responsibility) and Part B (Developer Responsibility) ("CRP"), which is attached to the Amended DDA and the Ground Lease, and incorporated herein by this reference as though fully set forth herein. Borrower shall comply with the CRP.

d. Enforceability.

In the event that the Borrower or any of its subcontractors is found to have violated any law, the Authority may declare the Borrower and/or such subcontractor

"non-responsible" and thus ineligible for any future Authority contracts or financial assistance.

e. Permanent Jobs Local Hiring.

Borrower shall be subject to and shall comply with the terms of the Local Hiring Responsibilities for Permanent Employers on CRA/LA Assisted Projects in the Bunker Hill Project Area attached to the Amended DDA. As required by Section II.(4)(b) of the Policy, Borrower hereby agrees to the terms of the Local Hiring Agreement and Project Labor Agreement ("LHA/PLA") attached to the Policy and shall ensure that its prime contractor agrees to the terms of the LHA/PLA.

ARTICLE 7. ASSIGNMENT AND TRANSFERS

7.1 Definitions.

As used in this Article 7, the terms "Transfer" and "Permitted Transfer" shall have the respective meanings set forth in Section 1.2 of this Agreement.

7.2 Restrictions on Transfer.

a. Borrower represents and agrees that its undertakings pursuant to this Agreement are for the purpose of redeveloping the Site and providing affordable rental housing for Forty Percent Income Households and Very Low Income Households, and not for speculation in land holding. Borrower further recognizes that the qualifications and identity of Borrower are of particular concern to the Authority, in light of the following: (1) the importance of the redevelopment of the Site to the general welfare of the community; (2) the public assistance that has been made available by law and by the government for the purpose of making such redevelopment possible; and (3) the fact that a change in ownership or control of Borrower or any other act or transaction involving or resulting in a significant change in ownership or control of Borrower, is for practical purposes a transfer or disposition of the property then owned by Borrower. Borrower further recognizes that it is because of such qualifications and identity that Authority is entering into this Agreement with Borrower. Therefore, no voluntary or involuntary successor in interest of Borrower shall acquire any rights or powers under this Agreement except as expressly set forth herein.

b. Borrower shall not assign all or any part of this Agreement or the Site, or any interest herein, without the prior written approval of Authority. Subject to review of documentation effectuating any such proposed assignment or transfer, evidencing that such Transfer is a Permitted Transfer, no consent of Authority shall be required.

c. For the reasons cited above, Borrower represents and agrees for itself and any successor in interest that, without the prior written approval of Authority, there shall be no significant change in the ownership of Borrower or in the relative

proportions thereof, or with respect to the identity of the parties in control of Borrower or the degree thereof, by any method or means, except Permitted Transfers.

d. Any assignment or transfer of this Agreement or the Site or any interest herein or therein or significant change in ownership of Borrower, other than a Permitted Transfer, shall require the prior written approval of Authority. To the extent Authority approval of an assignment or transfer is required by this Agreement, in granting or withholding its approval, Authority shall base its decision upon the relevant experience, financial capability and reputation of the proposed assignee or transferee and the effect, if any, of such proposed transfer on the public purposes of this Agreement. In addition, Authority shall have the right, in its sole discretion, to disapprove any assignment or transfer of this Agreement or any interest herein or significant change in ownership of Borrower or transfer of the Site that results in payment of consideration to any Person prior to the issuance of the Certificate of Completion that is not conditioned upon the issuance of the Certificate of Completion.

e. Borrower shall promptly notify Authority of any and all changes whatsoever in the identity of the parties in control of Borrower or the degree thereof, of which it or any of its officers have been notified or otherwise have knowledge or information. Except for Permitted Transfers, this Agreement may be terminated by Authority if there is any significant change (voluntary or involuntary) in membership, management or control, of Borrower (other than such changes occasioned by the death or incapacity of any individual). In the event of the death or incapacity of any individual who controls Borrower or the managing member or general partner of Borrower, any resulting change in the management of the Improvements or the control of the day-to-day operations of the Site and the Improvements shall be subject to the approval of the Authority Designated Representative, which approval shall not be unreasonably withheld, conditioned or delayed.

f. The execution and delivery of the option agreement, or other option, described in the Borrower Agreement shall not constitute a default under this Authority Loan Agreement or accelerate the maturity of the Authority Loan. Notwithstanding anything to the contrary contained herein, no consent of Authority shall be required for (i) the exercise of said option t by the optionee identified therein, and (ii) the assumption without penalty of Authority Loan obligations by the optionee and the release of Borrower from such obligations. The exercise of rights under such agreement shall not constitute a default or accelerate maturity of the Authority Loan.

g. If the option described in Borrower Agreement is not exercised and the Project is sold subject to low income housing use restrictions as contained in the Agreement Containing Covenants, other existing regulatory agreement or other recorded covenant, any requisite consent of Authority to said sale, and to the assumption without penalty of loan obligations by the purchaser and the release of Borrower from such obligations, shall not be unreasonably withheld.

7.3 Prohibited Transfers.

The limitations on Transfers set forth in this Article 7 shall apply from the date of this Agreement until the latest of (a) issuance of a Certificate of Completion by the Authority to the Borrower; (b) the date the Authority Loan is repaid in full; and (c) the date the Agreement Containing Covenant expires. Except as expressly permitted in this Agreement, the Borrower represents and agrees that the Borrower has not made or created, and shall not make or create or suffer to be made or created, any Transfer, either voluntarily or by operation of law, without the prior approval of the Authority. Any Transfer made in contravention of this Section 7.3 shall be void and shall be deemed to be a default under this Agreement, whether or not the Borrower knew of or participated in such Transfer.

7.4 Effectuation of Transfers.

a. In the event of a Permitted Transfer (other than a Permitted Transfer of the Tax Credit Equity Investor's interest in the Borrower), Borrower shall submit to Authority such documentation as the Authority Designated Representative or designee may determine is sufficient to document that such Transfer is a Permitted Transfer, provided, however, no consent from the Authority to a Permitted Transfer shall be required.

b. In the event of a Transfer other than a Permitted Transfer, the proposed transferee for which the Authority's approval is required shall have the relevant experience, financial capability and reputation necessary to fulfill the obligations undertaken in this Agreement by the Borrower and otherwise acceptable to Authority. The Authority shall grant or deny approval of a proposed Transfer within thirty (30) calendar days of receipt by the Authority of the Borrower's request for approval of a Transfer, by Notice as required by Section 10.2, accompanied by the deposit required by paragraph e. of this Section 7.4, below, which request shall include evidence of the proposed transferee's business expertise and financial capacity. Failure by the Authority to approve or disapprove the proposed Transfer within thirty (30) calendar days after receipt of the Borrower's written request shall be deemed to be approval of the proposed Transfer by the Authority if the request for a Transfer includes the deposit required by paragraph e. of this Section 7.4, below, and the following warning printed in bold type not smaller than 12 point:

NOTICE IS HEREBY GIVEN THAT FAILURE TO APPROVE THE REQUESTED MATTER WITHIN 30 CALENDAR DAYS SHALL BE DEEMED AN APPROVAL PURSUANT TO SECTION 7.4 OF THE LOAN AGREEMENT BETWEEN THE LOS ANGELES GRAND AVENUE AUTHORITY AND GRAND AVENUE M HOUSING PARTNERS, LLC, DATED _____, 2012.

c. Any Transfer otherwise authorized or approved pursuant to this Agreement (including Permitted Transfers for which Authority approval is not required) shall not be permitted unless, at the time of the Transfer, the Person to which such

Transfer is made (other than Transfers of partnership interests in the Tax Credit Equity Investor), by an agreement reasonably satisfactory to the Authority and in form recordable in the Office of the Los Angeles County Recorder, expressly agrees to perform and observe, from and after the date of the Transfer, the obligations, terms and conditions of this Agreement to the extent its predecessor was so bound; provided, however, that no such transferee shall be liable for the failure of its predecessor to perform any such obligation.

d. Any assignment of rights and/or delegation of obligations under this Agreement in connection with a Transfer (whether or not Authority approval is required) shall be in writing executed by Borrower and the assignee or transferee, which written agreement shall name the Authority as an express third party beneficiary with respect to such agreement (the "Assumption Agreement") with a copy thereof delivered to the Authority within ten (10) Business Days after the effective date thereof. Upon assignment or transfer of this Agreement pursuant to an Assumption Agreement, the assignor shall be relieved of liability with respect to any such obligations relating to the Project assumed by the assignee. Notwithstanding the foregoing, unless such assignee specifically assumes pursuant to the Assumption Agreement the obligations under this Agreement to indemnify Authority with respect to the Project, the assignor shall retain such obligations and remain jointly and severally liable for such indemnity obligations with such assignee. This indemnity obligation shall survive the issuance of a Certificate of Completion by the Authority, repayment of the Authority Loan, reconveyance of the Authority Loan Deed of Trust, Agreement Containing Covenants and Notice of Affordability Restrictions and the termination of this Agreement.

e. Borrower shall reimburse the Authority for all actual staff time and consultant (legal and financial) costs associated with the Authority's review and consideration of any request for approval of a Transfer (but not in the case of a request for confirmation that a Transfer constitutes a Permitted Transfer in accordance with Section 7.4(a)). Authority shall not be obligated to act on any request for approval of a Transfer unless Borrower shall deposit with Authority the sum of Ten Thousand Dollars ($10,000), which amount shall be subject to adjustment equal to the cumulative annual increase, if any, in the Consumer Price Index since 2012, together with its request for approval of a Transfer. If the costs of Authority review are less than the amount deposited, the excess deposit shall be returned to Borrower. If the costs of Authority review exceed the deposit amount, the Authority shall send the Borrower a bill for the costs and Borrower shall promptly pay the Authority the additional costs.

ARTICLE 8. SECURITY FINANCING AND RIGHTS OF LENDERS

8.1 No Encumbrances Except for Development Purposes.

a. Borrower acknowledges that no additional senior encumbrances on the property will be permitted without the written consent of the Authority until closing of the construction financing.

b. From and after the Authority Loan Closing, mortgages, deeds of trust, and other real property security instruments are permitted to be placed upon the Borrower's interest in the Site to the extent consistent with the sources of financing set forth in the Project Budget. Such permitted security instruments and related interests shall be referred to as "Security Financing Interests." The Borrower shall promptly notify the Authority in writing of any Security Financing Interest that Borrower intends to record against the Site. The documents evidencing the Security Financing Interests shall provide that in the event of a Borrower default, the holder of the Security Financing Interest shall send notice of the default to the Authority concurrently with its notice to the Borrower.

c. The Borrower may record Security Financing Interests on the Borrower's interest in the Site only for the purpose of securing construction loans and permanent financing identified in the Project Budget or any amended Project Budget approved by the Authority, and any refinancing of any such approved financing, subject to the Authority's consent.

8.2 Lender Not Obligated to Construct.

The holder of any Security Financing Interest authorized by this Agreement ("Permitted Lender") is not obligated to construct or complete any improvements or to guarantee such construction or completion, nor shall any covenant or any other provision of this Agreement be construed so to obligate such Permitted Lender. However, nothing in this Agreement shall be deemed to permit or authorize any such Permitted Lender to devote the Site or any portion thereof to any uses, or to construct any improvements thereon, other than those uses or improvements provided for or authorized by this Agreement.

8.3 Notice of Default and Right to Cure.

a. Whenever the Authority delivers any notice or demand to the Borrower with respect to the commencement, completion, or cessation of the construction of the Project, or with respect to any Event of Default (as defined below) under the terms of this Agreement, the Authority shall at the same time deliver to each holder of record of any Security Financing Interest creating a lien upon the Site or any portion thereof, and the Tax Credit Equity Investor, a copy of such notice or demand. Each such holder, and the Tax Credit Equity Investor, shall (insofar as the rights of the Authority are concerned) have the right, but not the obligation, at its option, within thirty (30) after the receipt of the notice, to cure or remedy or commence to cure or remedy any such default or breach and to add the cost thereof to the security interest debt and the lien on its security interest. Any such increase in a Security Financing Interest, limited to the amount needed to cure or remedy such default, shall not require additional approval by Authority. Nothing contained in this Agreement shall be deemed to permit or authorize such holder to undertake or continue the construction or completion of the Project (beyond the extent necessary to conserve or protect such improvements or construction already made) without first having expressly assumed in writing the Borrower's obligations to the Authority under this Agreement. The holder in that event

must agree to complete, in the manner provided in this Agreement, the development of the Project. Any such holder properly completing the development of the Project pursuant to this section shall assume all rights and obligations of Borrower under this Agreement and shall be entitled, upon written request made to the Authority, to a Certificate of Completion from the Authority.

b. If a non-monetary event of default occurs under the terms of this Agreement, prior to exercising any remedies hereunder, Authority shall give Borrower and the Tax Credit Equity Investor, as identified in Borrower Agreement or partnership agreement, as the case may be, simultaneous notice of such default. If the default is reasonably capable of being cured thirty (30) days after such notice is received or deemed received, Borrower shall have such period to effect a cure prior to exercise of remedies by the Authority under this Loan Agreement. If the default is such that it is not reasonably capable of being cured within thirty (30) days, and Borrower (i) initiates corrective action within said period, and (ii) diligently and in good faith works to effect a cure as soon as possible, then Borrower shall have such additional time as is reasonably necessary to cure the default prior to exercise of any remedies by Authority. If Borrower fails to take corrective action or to cure the default within a reasonable time, Authority shall give Borrower and the Tax Credit Equity Investor written notice thereof, whereupon the Tax Credit Equity Investor may exercise any authority it may have under Borrower Agreement or partnership agreement, as the case may be, to remove and replace the managing member or general partner with a substitute managing member or general partner who shall effect a cure within a reasonable time thereafter in accordance with the foregoing provisions. In no event shall Authority be precluded from exercising remedies if its security becomes or is about to become materially jeopardized by any failure to cure a default or the default is not cured within one hundred eighty (180) calendar days after the notice of default is received or deemed received.

8.4 Failure of Holder to Complete Project.

In any case where six (6) months after default by the Borrower, a Permitted Lender has not exercised its right to commence to complete the construction of the Project, or, having commenced to complete the construction of the Project has failed to complete the Project in a timely manner, Authority shall be afforded those rights against such Permitted Lender it would otherwise have against the Borrower under this Agreement.

8.5 Right of Authority to Cure.

In the event of a default or breach by the Borrower under the terms of any Security Financing Interest prior to the completion of construction of the Project, and if the Permitted Lender has not exercised its right to commence to complete the construction of the Project, or, having commenced to complete the construction of the Project has failed to complete the Project in a timely manner, Authority may, upon prior written notice to the Borrower, cure the default or breach, prior to the completion of any foreclosure. In such event, the Authority shall be entitled to reimbursement from the Borrower of all costs and expenses incurred by the Authority in curing the default. The

Authority shall also be entitled to a lien upon the Project and/or Site to the extent of such costs and disbursements. The Authority agrees that such lien shall be subordinate to any Senior Loan, and the Authority shall execute from time to time any and all documentation reasonably requested by the Borrower to effect such subordination.

8.6 Permitted Lenders to be Notified.

The Borrower shall obtain and submit to Authority acknowledgement of this Article 8 by each holder of a Security Financing Interest prior to recordation of such Security Financing Interest.

8.7 Modifications.

If a Permitted Lender or Tax Credit Equity Investor should, as a condition of providing funding for the Project, request any modification of this Agreement in order to protect its interests in the Project or this Agreement, the Authority Designated Representative shall consider such request in good faith consistent with the purpose and intent of this Agreement and the rights and obligations of the Parties under this Agreement. The Authority Designated Representative shall have the authority to approve revisions to the terms of this Agreement requested in writing by a Permitted Lender or Tax Credit Equity Investor that are not material revisions if he/she reasonably determines that such revisions: (a) are limited to minor, technical or procedural matters; (b) do not increase the amount of the Authority Loan; (c) do not result in a reduction of equity and loan funds sufficient to complete the Project; (d) do not materially adversely affect the economic feasibility of the Project; (e) do not materially adversely affect the security of the Authority Loan Deed of Trust; and (f) do not materially reduce any benefit to Authority or the public pursuant to this Agreement. The Authority Designated Representative shall have the right to approve or disapprove such non-material changes in his/her sole discretion, or may refer such decision to the Authority Board. Material revisions of this Agreement shall require the prior approval of the Authority Board.

ARTICLE 9. DEFAULT AND REMEDIES

9.1 Defaults – General.

a. Subject to the extensions of time set forth in Section 8.3, this Section 9.1, and Section 10.3 (as applicable), failure or delay by either Party to perform or to comply with any term or provision of this Agreement shall constitute an "Event of Default" under this Agreement. The Party who fails or delays must commence to cure, correct or remedy such failure or delay and shall complete such cure, correction or remedy with reasonable diligence. A material breach, or default by Borrower that continues beyond applicable notice and cure periods under the Amended DDA, the Ground Lease, or the 7.7 Million Dollar Loan Documents shall constitute a default under this Agreement.

b. The injured Party shall give written notice of default to the Party in default, specifying the default complained of by the injured Party. Failure or delay in giving such notice shall not constitute a waiver of any default, nor shall it change the time of default. Except as otherwise expressly provided in this Agreement, any failures or delays by either Party in asserting any of its rights and remedies as to any default shall not operate as a waiver of any default or of any such rights or remedies. Delays by either Party in asserting any of its rights and remedies shall not deprive either Party of its right to institute and maintain any actions or proceedings which it may deem necessary to protect, assert or enforce any such rights or remedies.

c. If a monetary Event of Default occurs, prior to exercising any remedies hereunder, the injured Party shall give the Party in default written notice of such default. The Party in default shall have a period of fifteen (15) days after such notice is received or deemed received within which to cure the default prior to exercise of remedies by the injured Party.

d. If a non-monetary Event of Default occurs, prior to exercising any remedies hereunder, the injured Party shall give the Party in default notice of such default. If the default is reasonably capable of being cured within thirty (30) days after such notice is received or deemed received, the Party in default shall have such period to effect a cure prior to exercise of remedies by the injured Party. If the default is such that it is not reasonably capable of being cured within thirty (30) days, and the Party in default (i) initiates corrective action within said period, and (ii) diligently, continually, and in good faith works to effect a cure as soon as possible, then the Party in default shall have such additional time as is reasonably necessary, but not more than one hundred eighty (180) calendar days, to cure the default prior to exercise of any remedies by the injured Party.

e. If Borrower fails to take corrective action or cure the default within a reasonable time, the Authority shall give the Senior Lender and, as provided in paragraph f., below, the Tax Credit Equity Investor notice thereof. The Tax Credit Equity Investor may take such action, including removing and replacing the managing member or managing general partner of Borrower with a substitute managing member or managing general partner, who shall effect a cure within a reasonable time thereafter in accordance with the foregoing provisions. The Authority agrees to accept cures tendered by any Senior Lender or Tax Credit Equity Investor within the cure periods provided in the Authority Note. Additionally, in the event the Senior Lender or Tax Credit Equity Investor is precluded from curing a non-monetary default due to a bankruptcy, injunction, or similar proceeding by or against Borrower or the managing member or managing general partner of Borrower, the Authority agrees to forbear from completing a foreclosure (judicial or non-judicial) during the period during which the Senior Lender or Tax Credit Equity Investor is so precluded from acting, not to exceed ninety (90) calendar days, provided such Tax Credit Equity Investor and Senior Lender are otherwise in compliance with the foregoing provisions. In no event shall the Authority be precluded from exercising remedies if its rights become or are about to become materially jeopardized by any failure to cure a default or the default is not cured within one hundred eighty (180) calendar days after the first notice of default is given.

f. After Borrower gives written notice to Authority of the admission to Borrower's limited partnership or limited liability company of the Tax Credit Equity Investor, Authority shall send to the Tax Credit Equity Investor a copy of all notices of default and all other notices that Authority sends to Borrower, at the following address for the Tax Credit Equity Investor (unless subsequently changed): BF Grand Avenue, LP, c/o Boston Financial Investment Management, LP, 101 Arch Street, 13th Floor, Boston, MA 02110, Attn: Asset Management – Parcel M Grand Avenue Apartments; with a copy to Holland & Knight LLP, 10 St. James Avenue, Boston, MA 02116, Attn: James E. McDermott, Esq.

9.2 Institution of Legal Actions.

In addition to any other rights or remedies (and except as otherwise provided in this Agreement), either Party may institute legal action to cure, correct or remedy any default, to recover damages for any default, or to obtain any other remedy consistent with the purpose of this Agreement or otherwise available at law or at equity, including, but not limited to, the right of foreclosure under the Authority Deed of Trust. Such legal actions must be instituted in the Superior Court of the County of Los Angeles, State of California, in any other appropriate court of that county, or in the United States District Court for the Central District of California.

9.3 Applicable Law.

The laws of the State of California shall govern the interpretation and enforcement of this Agreement.

9.4 Acceptance of Service of Process.

a. In the event that any legal action is commenced by Borrower against the Authority, service of process on the Authority shall be made by personal service upon the Custodian of Records of the Authority, or in such other manner as may be provided by law.

b. In the event that any legal action is commenced by the Authority against Borrower, service of process on Borrower shall be made by personal service upon Borrower (or upon the managing member or managing general partner or any officer of Borrower) and shall be valid whether made within or without the State of California, or in such manner as may be provided by law.

9.5 Rights and Remedies Are Cumulative.

Except with respect to rights and remedies expressly declared to be exclusive in this Agreement, the rights and remedies of the parties are cumulative, and the exercise by either Party of one or more of such rights or remedies shall not preclude the exercise by it, at the same or different times, of any other rights or remedies for the same default or any other default by the other Party.

9.6 Damages.

Subject to the notice and cure provisions of Section 9.1, if either Party defaults with regard to any of the provisions of this Agreement, the non-defaulting Party shall serve written notice of such default upon the defaulting Party. Subject to Section 13 of the Authority Construction and Permanent Loan Note, the default is not cured within the time provided in Section 9.1, the defaulting Party shall be liable to the non-defaulting Party for any damages caused by such default, and the non-defaulting Party may thereafter (but not before) commence an action for damages against the defaulting Party with respect to such default.

9.7 Specific Performance.

Subject to the notice and cure provisions of Section 9.1, if either Party defaults with regard to any of the provisions of this Agreement, the non-defaulting Party shall serve written notice of such default upon the defaulting Party. If the default is not cured within the time provided in Section 9.1, the non-defaulting Party, at its option, may thereafter (but not before) commence an action for specific performance of the terms of this Agreement pertaining to such default.

9.8 Reserved.

9.9 Termination by Authority.

a. Prior to the issuance of the Certificate of Completion, Authority shall have the right to terminate this Agreement in the event any of the following defaults shall occur:

i. Borrower fails to commence construction of the Improvements as required by this Agreement and such breach is not cured within the time provided in Section 9.1 of this Agreement, provided that Borrower shall not have obtained an extension or postponement to which Borrower may be entitled pursuant to Section 10.3 hereof; or

ii. Borrower abandons or substantially suspends construction of the improvements and such breach is not cured within the time provided in Section 9.1 of this Agreement, provided Borrower has not obtained an extension or postponement to which Borrower may be entitled to pursuant to Section 10.3 hereof; or

iii. Borrower assigns or attempts to assign this Agreement, or any rights herein, or transfer, or suffer any involuntary transfer of the Property, or any part thereof, in violation of this Agreement, and such breach is not cured within the time provided in Section 9.1 of this Agreement; or

iv. Borrower otherwise materially breaches this Agreement, and such breach is not cured within the time provided in this Agreement.

9.10 Survival.

Upon termination of this Agreement pursuant to this Article 9, all indemnification provisions set forth in this Agreement and any other provisions of this Agreement which by their terms are to survive termination hereof shall survive such termination. This Section 9.10 is for reference purposes only, and does not alter the scope or nature of the surviving provisions.

9.11 Inaction Not a Waiver of Default.

Any failures or delays by either Party in asserting any of its rights and remedies as to any Default shall not operate as a waiver of any Default or of any such rights or remedies, or deprive such Party of its right to institute and maintain any actions or proceedings which it may deem necessary to protect, assert or enforce any such rights or remedies.

9.12 Attorneys' Fees.

Should legal action be brought by either Party for breach of this Agreement or to enforce any provision, neither Party in such action shall be entitled to attorneys' fees, court costs and other litigation expenses, including, without limitation, expenses incurred for preparation and discovery, and on appeal.

ARTICLE 10. GENERAL PROVISIONS

10.1 Borrower Representations and Warranties.

The Borrower represents and warrants to the Authority, as follows:

a. Organization. The Borrower is Grand Avenue M Housing Partners, LLC, a California limited liability company, whose managing member is Related/Parcel M Development Co., LLC., a California limited liability company, each of which is duly organized, validly existing and in good standing under the laws of the State of California, with full power and authority to conduct its business as presently conducted and to execute, deliver and perform its obligations under this Agreement.

b. Authorization. The Borrower has taken all necessary action to authorize its execution, delivery and, subject to any conditions set forth in this Agreement, performance of the Agreement. Upon the date of this Agreement, this Agreement shall constitute a legal, valid and binding obligation of the Borrower, enforceable against it in accordance with its terms.

c. No Conflict. The execution, delivery and performance of this Agreement by the Borrower does not and shall not materially conflict with, or constitute a material violation or material breach of, or constitute a default under (i) the charter or incorporation documents of the Borrower, (ii) any applicable law, rule or regulation binding upon or applicable to the Borrower, or (iii) any material agreements to which the Borrower is a party.

d. No Litigation. Unless otherwise disclosed in writing to the Authority prior to the date of this Agreement, there is no existing or, to the Borrower's actual knowledge, pending or threatened litigation, suit, action or proceeding before any court or administrative Authority affecting the Borrower or, to the best knowledge of the Borrower, the Site that would, if adversely determined, materially and adversely affect the Borrower or the Site or the Borrower's ability to perform its obligations under this Agreement or to develop and operate the Project.

e. Licenses, Permits, Consents and Approvals. Borrower and/or any person or entity owning or operating the Site has duly obtained and maintained, or shall duly obtain and maintain, and shall continue to obtain and maintain, all licenses, permits, consents and approvals required by all applicable governmental authorities to own and operate the business on the Site.

10.2 Notices.

Formal notices, demands, and communications between the Authority and the Borrower shall be sufficiently given if, and shall not be deemed given unless given in writing and dispatched by certified mail, return receipt requested, or by electronic facsimile transmission followed by delivery of a "hard" copy, or by personal delivery (including by means of professional messenger service, courier service such as United Parcel Service or Federal Express, or by U.S. Postal Service), with a receipt showing date of delivery, to the principal offices of the Authority and the Borrower as follows:

Authority:	The Los Angeles Grand Avenue Authority c/o County of Los Angeles Chief Executive Office 500 West Temple Street Los Angeles, CA 90012 Attn: Chief Administrative Officer
with copies to:	Office of County Counsel c/o County of Los Angeles 500 West Temple Street Los Angeles, CA 90012 Attn: County Counsel
with copies to:	Los Angeles City Attorney's Office 200 North Main Street, 8th Floor Los Angeles, CA 90012 Attn: City Attorney
Borrower:	Grand Avenue M Housing Partners, LLC c/o The Related Companies of California 18201 Von Karman Avenue, Suite 900 Irvine, California 92612 Attn: William A. Witte

With copies to: BF Grand Avenue, LP
c/o Boston Financial Investment Management, LP
101 Arch Street, 13th Floor
Boston, MA 02110
Attn: Asset Management
Parcel M Grand Avenue Apartments

With copies to: Holland & Knight LLP
10 St. James Avenue
Boston, MA 02116
Attn: James E. McDermott, Esq.

With copies to: Bocarsly Emden Cowan Esmail
& Arndt LLP
633 West Fifth Street, 70th Floor
Los Angeles, CA 90071
Attn: Lance Bocarsly

Such written notices, demands and communications may be sent in the same manner to such other addresses as the affected Party may from time to time designate by mail as provided in this Section 10.2. Delivery shall be deemed to have occurred at the time indicated on the receipt for delivery or refusal of delivery.

10.3 Enforced Delay: Extension of Time of Performance.

a. In addition to specific provisions of this Agreement, the time for performing non-monetary obligations pursuant to this Agreement shall be extended and non-monetary performance by either Party shall not be deemed to be in default where delays are due to war; insurrection; strikes; lock-outs; riots; floods; earthquakes; fires; quarantine restrictions; freight embargoes; acts of god; severe or unusual shortages of materials or labor; uncommon inclement weather of an extreme or exceptional nature, unavoidable casualty; or court order; or any other similar causes (other than lack of funds of the Borrower or the Borrower's inability to finance the construction of the Project or Phase IIB) beyond the control or without the fault of the Party claiming an extension of time to perform.

b. An extension of time for any such cause (a "Force Majeure Delay") shall be for the period of the enforced delay and shall commence to run from the time of the commencement of the cause, if notice by the Party claiming such extension is sent to the other Party within twenty (20) Business Days of knowledge of the commencement of the cause. Notwithstanding the foregoing, none of the foregoing events shall constitute a Force Majeure Delay unless and until the Party claiming such delay and interference delivers to the other Party written notice describing the event, its cause, when and how such Party obtained knowledge, the date and the event commenced, and the estimated delay resulting therefrom. Any Party claiming a Force Majeure Delay shall deliver such written notice within twenty (20) Business Days after it obtains actual

knowledge of the event. Times of performance under this Agreement may also be extended in writing by the Authority and Borrower.

10.4 Conflict of Interest.

a. No member, official, or employee of Authority shall have any personal interest, direct or indirect, in this Agreement, nor shall any such member, official, or employee participate in any decision relating to the Agreement which affects his or her personal interests or the interests of any corporation, partnership, or association in which he or she is, directly or indirectly, interested.

b. Borrower warrants that it has not paid or given, and shall not pay or give, any third person any money or other consideration for obtaining this Agreement.

10.5 Non-liability of Authority Officials and Employees.

No member, official, agent, legal counsel or employee of Authority shall be personally liable to Borrower, or any successor in interest in the event of any default or breach by Authority or for any amount which may become due to Borrower or successor or on any obligation under the terms of this Agreement.

10.6 Inspection of Books and Records.

Prior to Completion, the Authority shall have the right at all reasonable times to inspect the books and records of Borrower pertaining to the Property as pertinent to the purposes of this Agreement. Borrower shall also have the right at all reasonable times to inspect the books and records of the Authority pertaining to the Property as pertinent to the purposes of this Agreement.

10.7 Approvals.

a. Except as otherwise expressly provided in this Agreement, approvals required of Authority or Borrower in this Agreement, including the attachments hereto, shall not be unreasonably withheld or delayed. All approvals shall be in writing. Failure by either Party to approve or disapprove a matter within the time provided for approval or disapproval of the matter shall not be deemed either approval or disapproval of the matter, unless this Agreement specifically provides otherwise. Notwithstanding the foregoing, nothing contained in this Agreement shall restrict or limit the exercise of discretion by the Authority Board or any member of the Authority Board in approving or disapproving this Agreement or any proposed material revisions or amendments to this Agreement, which approval may be granted or denied in the sole and absolute discretion of the Authority Board.

b. Whenever this Agreement calls for Authority approval, consent, or waiver, the written approval, consent, or waiver of the Authority Designated Representative shall constitute the approval, consent, or waiver of the Authority, without further authorization required from the Authority Board. The Authority hereby authorizes the Authority Designated Representative to deliver such approvals or consents as are

required by this Agreement, or to waive requirements under this Agreement, on behalf of the Authority. However, subject to Section 8.7 of this Agreement, any material modification and any amendment to this Agreement shall require approval by the Authority Board.

10.8 Real Estate Commissions.

Neither Borrower nor Authority shall be liable for any real estate commissions or brokerage fees which may arise from this Agreement. Borrower and Authority each represents that it has engaged no broker, agent or finder in connection with this Agreement.

10.9 Construction and Interpretation of Agreement.

a. The language in all parts of this Agreement shall in all cases be construed simply, as a whole and in accordance with its fair meaning and not strictly for or against any Party. The parties hereto acknowledge and agree that this Agreement has been prepared jointly by the parties and has been the subject of arm's length and careful negotiation over a considerable period of time, that each Party has been given the opportunity to independently review this Agreement with legal counsel, and that each Party has the requisite experience and sophistication to understand, interpret, and agree to the particular language of the provisions hereof. Accordingly, in the event of an ambiguity in or dispute regarding the interpretation of this Agreement, this Agreement shall not be interpreted or construed against the Party preparing it, and instead other rules of interpretation and construction shall be utilized.

b. If any term or provision of this Agreement, the deletion of which would not adversely affect the receipt of any material benefit by any Party hereunder, shall be held by a court of competent jurisdiction to be invalid or unenforceable, the remainder of this Agreement shall not be affected thereby and each other term and provision of this Agreement shall be valid and enforceable to the fullest extent permitted by law. It is the intention of the parties hereto that in lieu of each clause or provision of this Agreement that is illegal, invalid, or unenforceable, there be added as a part of this Agreement an enforceable clause or provision as similar in terms to such illegal, invalid, or unenforceable clause or provision as may be possible.

c. Any titles of the articles, sections or subsections of this Agreement are inserted for convenience of reference only and shall be disregarded in interpreting any part of its provision.

d. References in this instrument to this "Agreement" mean, refer to and include this instrument as well as any riders, exhibits, addenda and attachments hereto (which are hereby incorporated herein by this reference) or other documents expressly incorporated by reference in this instrument. Any references to any covenant, condition, obligation, and/or undertaking "herein," "hereunder," or "pursuant hereto" (or language of like import) shall mean, refer to, and include the covenants, obligations, and undertakings existing pursuant to this instrument and any riders, exhibits, addenda, and

attachments or other documents affixed to or expressly incorporated by reference in this instrument.

e. As used in this Agreement, and as the context may require, the singular includes the plural and vice versa, and the masculine gender includes the feminine and vice versa.

10.10 Time of Essence.

Time is of the essence with respect to the performance of each of the covenants and agreements contained in this Agreement.

10.11 Relationship of the Parties.

Nothing contained in this Agreement shall be deemed or construed to create a partnership, joint venture, or any other similar relationship between the parties hereto or cause Authority to be responsible in any way for the debts or obligations of Borrower or any other Person.

10.12 Compliance with Law.

Borrower agrees to comply with all the requirements now in force, or which may hereafter be in force, of all municipal, county, state and federal authorities, pertaining to the development and use of the Property and the Improvements, as well as operations conducted thereon. The judgment of any court of competent jurisdiction, or the admission of Borrower or any lessee or permittee in any action or proceeding against them, or any of them, whether Authority be a Party thereto or not, that Borrower, lessee or permittee has violated any such ordinance or statute in the development and use of the Property shall be conclusive of that fact as between Authority and Borrower and shall therefore allow Authority to exercise any and all remedies set forth in the Contractor Responsibility Policy, as set forth in the Amended DDA and the Ground Lease.

10.13 Binding Effect.

This Agreement, and the terms, provisions, promises, covenants and conditions hereof, shall be binding upon and shall inure to the benefit of the parties hereto and their respective heirs, legal representatives, successors and assigns.

10.14 Rights of Third Parties.

a. Except as otherwise expressly provided in this Agreement and the Agreement Containing Covenants, this Agreement shall not be deemed to confer any rights upon, nor obligate either of the Parties to this Agreement to any person or entity not a Party to this Agreement, and the Parties explicitly disclaim any intent to create a third party beneficiary relationship with any person or entity as a result of this Agreement.

b. The City shall be a third-party beneficiary retaining enforcement rights with respect to this Agreement.

c. The covenants and restrictions relating to the Affordable Housing Units set forth in Article 6 hereof and in the Agreement Containing Covenants shall run with the land and shall be enforceable against any owner of the Site who violates a covenant or restriction and each successor in interest who continues the violation by any of the following:

i. Authority;

ii. The City;

iii. A resident of any of the Affordable Units;

iv. A residents' association with members who reside in the Affordable Units;

v. A former resident of an Affordable Unit;

vi. An applicant seeking to enforce the covenants or restrictions for a particular Affordable Unit, if the applicant conforms to all of the following:

(a) Is either a Forty Percent Income Household or a Very Low Income Household;

(b) Is able and willing to occupy that particular Affordable Unit; and

(c) Was denied occupancy of that particular Affordable Unit due to an alleged breach of a covenant or restriction set forth in the Agreement Containing Covenants; and

vii. A person on an affordable housing waiting list who is a Forty Percent Income Household or a Very Low Income Household and who is able and willing to occupy an Affordable Unit.

10.15 Authority to Sign.

Borrower hereby represents that the persons executing this Agreement on behalf of Borrower have full authority to do so and to bind Borrower to perform pursuant to the terms and conditions of this Agreement.

10.16 Use of Project Images.

a. Borrower hereby consents to and approves the use by Authority and City of images of the Project, its models, plans and other graphical representations of the Project and its various elements ("Project Images") in connection with marketing,

public relations, and special events, websites, presentations, and other uses required by the Authority in connection with the Project. Such right to use the Project Images shall not be assignable by the Authority to any other party (including, without limitation, any private party) without the prior written consent of Borrower. Borrower shall obtain any rights and/or consents from any third parties necessary to provide these Project Image use rights to Authority.

b. Any publicity generated by Borrower for the Project during the term of the Authority Loan shall make reference to the contribution of Authority in making the Project possible. The words "The Los Angeles Grand Avenue Authority" shall be prominently displayed in any and all pieces of publicity, including but not limited to flyers, press releases, posters, signs, brochures, public service announcements, interviews and newspaper articles. Borrower further agrees to cooperate with authorized staff and officials of Authority in any Authority-generated publicity or promotional activities undertaken with respect to the Project.

10.17 Plans and Data.

If Borrower does not proceed with the purchase or development of the Site, or if this Agreement is terminated for any reason, other than the breach of this Agreement by Authority, Borrower shall deliver to Authority, without cost or expense to Authority, any and all plans, drawings, studies, designs, reports, surveys, and data pertaining to the site and its development (collectively, "Site Designs") which are in the possession of Borrower, together with a Bill of Sale therefor, which Site Designs shall thereupon be the sole property of Authority, free of all claims or interests of Borrower or any other person; and which Authority may use, grant, license or otherwise dispose of to any person for development of the Site or any other purpose. To secure the obligations set forth in this Section and as a condition precedent to the first disbursement of the Authority Loan funds, Borrower shall execute and cause its architect and contractor, as the case may be, and shall deliver to Authority an Assignment of Agreements, Plans, Specifications and Entitlements substantially in the form of the instrument attached to this Agreement as Exhibit H to Part I of Exhibits.

10.18 Applicable Law.

This Agreement shall be interpreted under and pursuant to the laws of the State of California.

10.19 Severability.

If any term, provision, covenant or condition of this Agreement is held in a final disposition by a court of competent jurisdiction to be invalid, void or unenforceable, the remaining provisions shall continue in full force and effect unless the rights and obligations of the Parties have been materially altered or abridged by such invalidation, voiding or unenforceability.

10.20 Binding Upon Successors; Covenants to Run With Land.

a. This Agreement shall be binding upon and inure to the benefit of the heirs, administrators, executors, successors in interest, and assigns of each of the Parties; provided, however, that there shall be no Transfer except as permitted in Article 7. Any reference in this Agreement to a specifically named Party shall be deemed to apply to any successor, heir, administrator, executor, successor, or assign of such Party who has acquired an interest in compliance with the terms of this Agreement or under law.

b. The terms of this Agreement shall run with the land, and shall bind all successors in title to the Site until the termination of this Agreement, except that the provisions of this Agreement that are specified to survive termination of this Agreement shall run with the land in perpetuity and remain in full force and effect following such termination. Every contract, deed, or other instrument hereafter executed covering or conveying the Site or any portion thereof shall be held conclusively to have been executed, delivered and accepted subject to such covenants and restrictions, regardless of whether such covenants or restrictions are set forth in such contract, deed or other instrument, unless the Authority expressly releases the Site or the applicable portion of the Site from the requirements of this Agreement.

10.21 Effectiveness of Agreement.

This Agreement is dated for convenience only and shall only become effective on the Effective Date.

10.22 Amendments.

This Agreement may be amended only by means of a writing signed by both Parties.

10.23 Reserved.

10.24 Submittals and Approvals.

Various submittals are required by the Borrower pursuant to this Agreement. As expressly provided by this Agreement, the Authority shall approve or disapprove certain submittals from Borrower within specified timeframes or else such submittal shall be deemed approved by the Authority. Notwithstanding the provisions for deemed approval, no submittal or matter shall be deemed approved unless the request for approval contains the following provision, in bold print with the appropriate time period stated:

> **NOTICE IS HEREBY GIVEN THAT PURSUANT TO THE LOAN AGREEMENT DATED AS OF _____ BETWEEN GRAND AVENUE M HOUSING PARTNERS, LLC, AND THE LOS ANGELES GRAND AVENUE AUTHORITY, THAT FAILURE TO APPROVE THE**

REQUESTED MATTER WITHIN ____ BUSINESS DAYS SHALL BE DEEMED AN APPROVAL.

10.25 Incorporation by Reference.

Each of the attachments and exhibits attached hereto is incorporated herein by this reference as though fully set forth.

10.26 Counterparts.

This Agreement may be executed by each Party on a separate signature page, and when the executed signature pages are combined, shall constitute one single instrument.

10.27 Entire Understanding of the Parties.

This Agreement constitutes the entire understanding and agreement of the Parties with respect to the matters contained herein and supersedes any prior memoranda of understanding, negotiation agreement or commitment letter.

10.28 Approval Procedure.

Execution and delivery of this Agreement by Borrower shall constitute Borrower's offer to enter into this Agreement with Authority. Following receipt of the executed Agreement, this Agreement shall be scheduled for consideration by the Authority Board. This Agreement shall not be effective unless approved by the Authority Board and executed by the Authority Designated Representative or designee. This Agreement must be authorized, executed and delivered by Authority within seventy-five (75) calendar days after date of signature by Borrower or Borrower may withdraw its offer to enter into the Agreement upon written notice to Authority. The effective date of this Agreement shall be the date when this Agreement has been executed by Authority.

10.29 Partial Reconveyance upon Subdivision.

The Authority acknowledges that the Borrower intends to subdivide the Site through recordation in the Official Records of the County of Los Angeles of a tract map (the "Tract Map") prior to the completion of construction of Phase IIB, and following such subdivision, the Project will exist on multiple legal parcels (the "Affordable Housing Parcels") and the other components of Phase IIB will exist on separate legal parcels (the "Market Rate Housing Parcels"). In connection with the subdivision and recordation of the Tract Map, Borrower intends to enter into a reciprocal easement agreement with covenants and conditions establishing, among other things, easements relating to access between the Affordable Housing Parcels and the Market Rate Housing Parcels (the "REA").

At such time during construction of the Project that Borrower desires to cause the recordation of the Tract Map and the REA, Borrower shall deliver an

execution copy of the Tract Map to the Authority for execution. Within fifteen (15) days of receipt of the Tract Map, Authority shall return an executed copy to Borrower. Upon Borrower's receipt of the executed Tract Map, Borrower shall be authorized by Authority to cause the recordation of the Tract Map and the REA. In addition to the foregoing, Authority agrees to execute and deliver to Borrower, within fifteen (15) days of receipt thereof, any and all documents necessary, in the opinion of the Title Company, to cause the subordination of the Authority Loan Documents to the Tract Map and the REA.

In connection with the execution of the sub-ground lease for the Market Rate Housing Parcels, provided that no Event of Default is continuing, the Authority shall cause the partial reconveyance of the Authority Loan Deed of Trust, and the partial release and partial termination of the Agreement Containing Covenants, the Notice of Affordability Restrictions, and any other document recorded against the Subject Property in connection with the Authority Loan, from the Market Rate Housing Parcels so that the Market Rate Housing Parcels are no longer encumbered by such documents, and that such documents only encumber the Affordable Housing Parcels (the "Reconveyance"). Authority shall return all documents to be executed in connection with such reconveyance and release to Borrower within fifteen (15) days of receipt thereof.

Following the Reconveyance, notwithstanding any provision of this Agreement or the Deed of Trust to the contrary: (1) the definition of "Site" in this Agreement shall refer only to the Affordable Housing Parcels; (2) a default under the Senior Loan documents, the Amended DDA, or Ground Lease (as amended) in connection with the other components of Phase IIB on the Market Rate Housing Parcels shall not constitute a default by Borrower under this Agreement and the Authority Loan Documents; and (3) only an event of a default by Borrower under the Amended DDA, or the Ground Lease (as amended) in connection with the Project shall constitute a default by Borrower under this Agreement and the Authority Loan Documents. In the event of conflict between the terms of this Section and any other Section of this Agreement, the terms of this Section shall control.

IN WITNESS WHEREOF, the Parties have executed this Loan Agreement as of the date first above written.

"AUTHORITY"

THE LOS ANGELES GRAND AVENUE AUTHORITY, a California joint powers authority

Dated: _____

By: _____

Name:_____

Its: _____

APPROVED AS TO FORM:

CARMEN A. TRUTANICH,
CITY ATTORNEY

By: _____
Timothy J. Chung
Deputy City Attorney

APPROVED AS TO FORM:

JOHN F. KRATTLI
COUNTY COUNSEL

By: _____
Helen S. Parker
Principal Deputy County Counsel

signatures continue on following page

"BORROWER"

GRAND AVENUE M HOUSING PARTNERS, LLC, a California limited liability company

By: Related/Parcel M Development Co., LLC, a California limited liability company, its manager

Dated: _____

By: _____
William A. Witte
President

EXHIBITS

[BEHIND THIS PAGE]

EXHIBIT A

SITE MAP

[BEHIND THIS PAGE]

EXHIBIT B

LEGAL DESCRIPTION

[BEHIND THIS PAGE]

EXHIBIT C

SCHEDULE OF PERFORMANCE

[BEHIND THIS PAGE]

EXHIBIT D

SCOPE OF DEVELOPMENT

[BEHIND THIS PAGE]

EXHIBIT E

PROJECT BUDGET

[BEHIND THIS PAGE]

EXHIBIT F

FORM OF AUTHORITY
CONSTRUCTION-PERMANENT LOAN NOTE

[BEHIND THIS PAGE]

EXHIBIT G

FORM OF AUTHORITY LOAN DEED OF TRUST

[BEHIND THIS PAGE]

EXHIBIT H

FORM OF ASSIGNMENT OF AGREEMENTS, PLANS, SPECIFICATIONS AND ENTITLEMENTS

[BEHIND THIS PAGE]

EXHIBIT I

FORM OF STATUTORY REQUEST FOR NOTICE

[BEHIND THIS PAGE]

EXHIBIT J

FORM OF AGREEMENT CONTAINING COVENANTS

[BEHIND THIS PAGE]

EXHIBIT K

FORM OF NOTICE OF AFFORDABILITY RESTRICTIONS

[BEHIND THIS PAGE]

EXHIBIT L

AUTHORITY CONSTRUCTION CAREERS AND PROJECT STABILIZATION POLICY

(TO BE ATTACHED ONLY IF AUTHORITY ASSISTANCE EXCEEDS $1 MILLION AND PROJECT CONTAINS 75 OR MORE UNITS OR MORE THAN 50,000 SQUARE FEET OF NON-RESIDENTIAL FLOOR AREA)

BEHIND THIS PAGE

EXHIBIT M

AUTHORITY CONSTRUCTION LOCAL HIRE PROGRAM

TO BE ATTACHED ONLY IF A CONSTRUCTION LOCAL HIRE PROGRAM APPLIES. LOCAL HIRE PROGRAM APPLIES ONLY IF (A) AUTHORITY ASSISTANCE IS BETWEEN $500,000 AND $1,000,000; OR (B) AUTHORITY ASSISTANCE IS $1,000,000 OR MORE AND CONSTRUCTION CAREERS AND PROJECT STABILIZATION POLICY DOES NOT APPLY

BEHIND THIS PAGE

EXHIBIT N

HUD REQUIREMENTS

(TO BE ATTACHED ONLY IF Authority ASSISTANCE DERIVES FROM A PROGRAM OF THE U.S. DEPARTMENT OF HOUSING AND URBAN DEVELOPMENT)

BEHIND THIS PAGE

EXHIBIT O

INTENTIONALLY OMITTED

EXHIBIT P

AUTHORITY HEALTHY NEIGHBORHOODS POLICY

(TO BE ATTACHED ONLY IF CITY COUNCIL APPROVES AMENDED HEALTHY NEIGHBORHOODS POLICY AND THEN ONLY IF AUTHORITY ASSISTANCE EXCEEDS $1 MILLION AND THE PROJECT CONTAINS 50 OR MORE RESIDENTIAL UNITS OR 50,000 SQUARE FEET OF NON-RESIDENTIAL FLOOR AREA, OR IF THE PARTIES OTHERWISE AGREE TO LEED CERTIFICATION)

BEHIND THIS PAGE

Schedule 5

LOAN AGREEMENT
[Grand Avenue - Phase IIB]

THIS LOAN AGREEMENT (this "Agreement") is entered into as of December __, 2012, by and between GRAND AVENUE M HOUSING PARTNERS, LLC, a California limited liability company ("Borrower"), and URBAN FUNDING, INC., a California corporation ("Lender").

RECITALS

A. WHEREAS, CRA/LA, a designated local authority ("CRA/LA"), as successor to the former Community Redevelopment Agency of the City of Los Angeles, owns fee title to that certain real property located in the City of Los Angeles, State of California, as more particularly and legally set forth in the legal description attached hereto as Exhibit A and incorporated herein by this reference (the "Property").

B. WHEREAS, CRA/LA and The Los Angeles Grand Avenue Authority, a California joint powers authority (the "Authority") entered into that certain Ground Lease, dated as of December __, 2012 (the "Lease"), pursuant to which CRA/LA leased to the Authority, and the Authority leased from CRA/LA, the Property.

C. WHEREAS, the Authority and Borrower entered into that certain Ground Lease, dated as of December __, 2012 (the "Sublease"), pursuant to which the Authority subleased to Borrower, and Borrower subleased from the Authority, the Property.

D. WHEREAS , Borrower intends to develop on the Property a project (the "Project"), including approximately two hundred seventy-one (271) residential units, consisting of approximately fifty-six (56) affordable rental units (including one manager's unit) designated for tenants with incomes at or below sixty percent (60%) of area median income (the "Affordable Units"), and approximately two hundred fifteen (215) market-rate rental units, approximately 7,250 square feet of indoor and outdoor retail and dining space and a parking structure containing approximately 280 parking spaces (the "Market Rate Improvements").

E. WHEREAS, in order to finance the development of the Project, the City of Los Angeles, a public body, corporate and politic (the "City") will obtain an allocation of tax-exempt private activity volume cap authority from the California Debt Limit Allocation Committee, and will issue certain tax exempt obligations to [Citibank, N.A.] (the "Bond Lender"), the proceeds of which will be used to make a loan to Borrower in the original principal amount of approximately [One Hundred Four Million Dollars ($104,000,000)] (the "Bond Loan").

F. WHEREAS, the Authority is concurrently herewith making a grant to Lender in the original principal amount of [Seven Million Nine Hundred Thousand Dollars

($7,900,000)] in order to further finance the development of the Project (the "Grant"), pursuant to that certain Grant Agreement dated of even date herewith between the Authority and Lender (the "Grant Agreement").

G. WHEREAS, Lender desires to loan the Grant proceeds to Borrower in order to provide financing for the development of the Project and, in connection therewith, Lender has agreed to make a loan to Borrower in the original principal amount of [Seven Million Nine Hundred Thousand Dollars ($7,900,000)] (the "Authority Loan").

H. WHEREAS, subsequent to the execution of the Lease and Sublease, and prior to completion of the Project, the Borrower shall cause the recordation of a tract map (the "Tract Map"), which will divide the Property into several air rights parcels. The air rights parcels will consist of two categories: the parcels upon which the Affordable Units will be located (the "Affordable Project Parcels"), and the parcels upon which the Market Rate Improvements will be located (the "Market Rate Project Parcels").

I. WHEREAS, concurrent with the recordation of the Tract Map, Borrower, CRA/LA, the Authority and Grand Avenue M Urban Housing, LLC, a California limited liability company (the "Market Rate Owner"), will enter into and cause the recordation of a Reciprocal Easement Agreement setting forth certain covenants, conditions and restrictions for the mutual and reciprocal benefit and complement of the Affordable Project Parcels and the Market Rate Project Parcels, and the present and future owners and occupants thereof (the "Reciprocal Easement Agreement").

J. WHEREAS, ~~[following recordation of the Tract Map and Reciprocal Easement Agreement and upon release of all funds held as retention by Bond Lender to Borrower~~concurrent with the date upon which the Authority and the Market Rate Owner enter into a sublease for the Market Rate Project Parcels (the "Release Date")~~]~~, the Sublease will, by its terms, release the Market Rate Project Parcels from the definition of Premises (as such term is defined in the Sublease)~~, and the Authority and the Market Rate Owner will enter into a sublease for the Market Rate Project Parcels~~.

K. WHEREAS, Borrower and Lender desire to enter into this Agreement to set forth their rights and obligations with respect to the Authority Loan.

NOW, THEREFORE, in consideration of the foregoing and other good and valuable consideration, the receipt and legal sufficiency of which are hereby acknowledged, the parties hereto hereby agree as follows:

AGREEMENT

1. Authority Loan. Lender hereby agrees to make the Authority Loan to Borrower and Borrower agrees to accept the Authority Loan, subject to and in accordance with the terms and conditions of this Agreement.

2. Note and Deed of Trust. Borrower agrees to repay the Authority Loan subject to the terms and conditions of this Agreement. The Authority Loan shall be evidenced by a promissory note executed by Borrower in favor of Lender in the amount of the Authority Loan in the form attached hereto as Exhibit B ("Note"). The Note shall be secured by a deed of trust and assignment of rents in the form attached hereto as Exhibit

C ("Deed of Trust"), which will encumber the Property and be subordinate to a deed of trust securing the Bond Loan, a deed of trust securing a letter of credit securing the Bond Loan, and a deed of trust securing a loan from CRA/LA to Borrower, to be disbursed by the Authority, in the approximate original principal amount of [Five Million Nine Hundred Ninety-Five Thousand Dollars ($5,995,000)].

3. Payments. Borrower shall make annual payments hereunder solely from available Cash Flow or Capital Transaction proceeds (as such terms are defined in Borrower's Amended and Restated Operating Agreement (the "Operating Agreement")) as specified in the Operating Agreement. Payments shall be applied first to accrued but unpaid interest on the Note and shall then be used to repay any outstanding principal due on the Note. All outstanding principal and accrued but unpaid interest shall be due and payable on the maturity date set forth in the Note.

4. Use of Proceeds. Borrower shall use the Authority Loan proceeds only to develop the Project.

5. Conditions Precedent. Lender's obligation to disburse the Authority Loan is conditioned upon (i) Borrower's delivery to Lender of executed originals of the Note, Deed of Trust and this Agreement (collectively, the "Authority Loan Documents"), and (ii) recordation of the Deed of Trust in the Official Records of Los Angeles County.

6. Compliance with Agreements. Borrower covenants and agrees to comply with all requirements of the Grant Agreement and the Sublease, as well as the Amended DDA, the Phase IIB Institutional Lender Documents and the Affordable Housing Loan Documents (used herein as such terms are defined in the Grant Agreement), as to the use of the Authority Loan proceeds, construction and operation of the Project, and all other matters related thereto.

7. Subordination Agreement. Lender hereby agrees intentionally and unconditionally, and without any further rights of consent or approval, that upon the recordation of the Tract Map and the Reciprocal Easement Agreement, Lender shall cause the lien or charge of the Deed of Trust to be made subordinate to the Tract Map and the Reciprocal Easement Agreement through the execution of a Subordination Agreement in the form attached hereto as Exhibit D (the "Subordination Agreement"). Lender hereby authorizes recordation of the Subordination Agreement.

8. Partial Reconveyance. Lender hereby agrees intentionally and unconditionally, and without any further rights of consent or approval, that upon the Release Date, Lender shall cease to have any right, title or interest in and to the Market Rate Project Parcels, and Lender shall reconvey the Market Rate Project Parcels through the execution of a Substitution of Trustee and Partial Reconveyance in the form attached hereto as Exhibit E (the "Partial Reconveyance"). Lender hereby authorizes recordation of the Partial Reconveyance.

9. Non-Recourse. Except as expressly provided in Section 17 of the Note, neither Borrower nor Borrower's officers, members, managers, directors, employees or agents nor their respective officers, members, managers, directors, employees, agents, partners or shareholders shall have any personal liability for the payment or performance of any of Borrower's obligations under the Note or this Agreement.

10. Events of Default. An "Event of Default" shall occur hereunder if Borrower shall:

(a) fail to perform, comply with or observe any obligation or any condition, term or covenant contained in the Authority Loan Documents, if the failure has continued for a period of thirty (30) days after demand in writing that Borrower cure the failure; or

(b) subject to all applicable notice and cure periods, default under the terms of the Sublease, the Amended DDA, the Phase IIB Institutional Lender Documents or the Affordable Housing Loan Documents, if the default has continued for a period of thirty (30) days after demand in writing that Borrower cure such default.

11. Remedies; No Waiver and Standstill.

(a) Upon the occurrence and during the continuance of any Event of Default, Lender may, at its option, do any or all of the following:

(i) Declare all amounts owing under the Note to be immediately due and payable; and

(ii) Exercise any and all of Lender's other rights and remedies under the Note or Deed of Trust.

(b) No waiver by Lender of any Event of Default shall be implied from any omission by Lender to take action on account of such Event of Default if such Event of Default persists or is repeated, and no express waiver shall affect any Event of Default other than the Event of Default expressly made the subject of the waiver. Any waiver of any breach of any covenant, term or condition contained herein shall not be construed as a waiver of any subsequent breach of the same covenant, term or condition.

(c) Notwithstanding the foregoing, during such time as Related California Urban Housing, LLC, a California limited liability company ~~owns~~, or an affiliate of The Related Companies, L.P., a New York limited partnership ("The Related Companies"), own an interest in the managing member of Borrower, Lender shall not commence foreclosure proceedings with respect to the Project under the Authority Loan Documents or exercise any other rights or remedies it may have under the Authority Loan Documents, including, but not limited to, accelerating the Authority Loan, collecting rents, appointing (or seeking the appointment of) a receiver or exercising any other rights or remedies thereunder, until the expiration of the 15-year tax credit compliance period for the Project determined pursuant to Section 42(i)(1) of the Internal Revenue Code of 1986, as amended (the "Standstill Period"). Lender waives no rights or remedies it may have under the Authority Loan Documents, but merely agrees not to enforce those rights or remedies during the Standstill Period.

12. Release. Upon receipt of all amounts owing and outstanding under the Authority Loan, Lender shall issue a full release of the Property from the lien of the Deed of Trust.

13. Amendment. The Authority Loan Documents shall not be amended, modified or rescinded without the prior written approval of Lender and Borrower.

14. Notices. All notices, consents, demands, approvals and other communications (the "Notices") that are given pursuant to the Authority Loan Documents shall be in writing to the appropriate party and shall be deemed to have been fully given when delivered, including delivery by commercial delivery service, or if deposited in the United States mail, certified or registered, postage prepaid, when received or refused. All Notices shall be addressed as follows:

If to Borrower : Grand Avenue M Housing Partners, LLC
c/o The Related Companies of California
18201 Von Karman Avenue, Suite 900
Irvine, California 92612
Attention: William A. Witte

With a copy to: BF Grand Avenue, LP
c/o Boston Financial Investment Management, LP
101 Arch Street, 13th Floor
Boston, MA 02110
Attention: Asset Management -- Parcel M Grand Avenue Apartments

And a copy to: Bocarsly Emden Cowan Esmail & Arndt LLP
633 West Fifth Street, 70th Floor
Los Angeles, CA 90071
Attention: Lance Bocarsly

If to Lender: Urban Funding, Inc.
c/o The Related Companies of California
18201 Von Karman Avenue, Suite 900
Irvine, California 92612
Attention: William A. Witte

Addresses for notice may be changed from time to time by notice to all other parties. Notwithstanding that Notices shall be deemed given when delivered, the nonreceipt of any Notice as the result of a change of address of which the sending party was not notified shall be deemed receipt of such Notice.

15. Maintenance of Records; Audits and Inspections. Borrower shall retain all records with respect to all matters covered by the Authority Loan Documents (the "Borrower Records") for a period of five (5) years following termination of the Grant Agreement. Such records shall be retained within the Los Angeles area unless authorization to remove them is granted by Lender. Borrower shall provide to Lender within five (5) business days of request therefor all such records as requested by Lender. Borrower shall take all other actions required by Lender to comply with the requirements of Section [13] of the Grant Agreement.

16. Audits and Inspections. Upon any request by the Authority to audit, examine and/or make excerpts or transcripts of any Borrower Records, Borrower shall take all actions required for Lender to comply with such request, including, without limitation, making any such records available at any time during normal business hours.

17. Indemnification.

(a) Borrower agrees to defend, indemnify, and hold harmless Lender, and Lender's officers, directors, board members, and employees (collectively, the "Indemnified Parties"), against and from any and all liability, loss, damages to property, injuries to, or death of any person or persons, and all claims, demands, suits, actions, proceedings, reasonable attorneys' fees, and defense costs, of any kind or nature, including workers' compensation claims, of or by anyone whomsoever, resulting from or arising out of Borrower's performance under the Authority Loan Documents, or any act or omission of Borrower hereunder (but excluding acts attributable to the gross negligence or willful misconduct of Related/Parcel M Development Co., LLC, a California limited liability company, or an affiliate of The Related Companies). The requirements of this provision shall survive the expiration or termination of this Agreement.

(b) Borrower shall reimburse Lender within five (5) days of request therefor for any and all amounts paid by Lender pursuant to the indemnification provisions of Section [9] of the Grant Agreement or Section [8] of the Collateral Assignment Agreement (as such term is defined in the Grant Agreement), other than for claims arising out of Lender's (or its affiliates') gross negligence or willful misconduct.

18. Applicable Law. This Agreement shall be governed by and construed in accordance with the internal laws of the State of California, without regard to principles of conflicts or choice of law rules.

19. Entire Agreement; Modifications. The Authority Loan Documents constitute the entire agreement between Borrower and Lender with respect to the Authority Loan, and supersede all prior or contemporaneous agreements, representations and understandings. No supplement to or modification of this Agreement shall be binding unless executed in writing by Borrower and Lender.

20. Headings; Severability. Headings in this Agreement are for convenience only and do not define or limit the scope of provisions of this Agreement. The invalidity or unenforceability of any one or more provisions of this Agreement will not affect the validity or enforceability of any other provision.

21. Counterparts. This Agreement may be executed in several counterparts, each of which shall be deemed to be an original copy and all of which together shall constitute one agreement binding on all parties hereto, notwithstanding that all the parties shall not have signed the same counterpart.

[*signatures appear on the following page*]

IN WITNESS WHEREOF, the parties have executed this Loan Agreement as of the date as first written above.

Borrower:

GRAND AVENUE M HOUSING PARTNERS, LLC, a California limited liability company

By: Related/Parcel M Development Co., LLC, a California limited liability company, its manager

By: _____
William A. Witte
President

Lender:

URBAN FUNDING, INC., a California corporation

By: _____
William A. Witte
President

EXHIBIT A

LEGAL DESCRIPTION

[Attached]

EXHIBIT B

PROMISSORY NOTE

[Attached]

PROMISSORY NOTE
[Grand Avenue - Phase IIB]

[$7,900,000] December __, 2012
Los Angeles, California

A. WHEREAS, GRAND AVENUE M HOUSING PARTNERS, LLC, a California limited liability company ("Borrower"), and URBAN FUNDING, INC., a California corporation ("Lender"), concurrently herewith are entering into that certain Loan Agreement, dated as of December __, 2012 (the "Loan Agreement").

B. WHEREAS, pursuant to the Loan Agreement, Lender is making the "Authority Loan" to Borrower to finance [Seven Million Nine Hundred Thousand Dollars ($7,900,000)] in costs of the Project (as such term is defined herein).

NOW, THEREFORE, FOR VALUE RECEIVED, Borrower promises to pay to the order of Lender, at 18201 Von Karman Avenue, Suite 900, Irvine, California 92612, or at such other place as Lender may from time to time designate in writing, (a) the principal sum of [Seven Million Nine Hundred Thousand Dollars ($7,900,000)], and (b) all fees, costs and expenses payable hereunder. This Note shall bear interest at the rate of 1.00% ~~[~~simple~~/compound]~~ per annum.

1. Definitions. Initially capitalized words and terms used in this Note without definition shall have the meanings ascribed thereto in the Loan Agreement or the following definitions, unless the context or use clearly requires otherwise:

"Authority" means The Los Angeles Grand Avenue Authority, a California joint powers authority.

"Authority Loan" has the meaning ascribed thereto in Recital B of this Note.

"Authority Loan Documents" means the documents evidencing and securing the Authority Loan.

"Deed of Trust" means the Deed of Trust of even date herewith by which this Note is secured.

"Official Records" means the Official Records of the County of Los Angeles, California.

2. Interpretation. In this Note, (a) the singular includes the plural and the plural the singular; (b) words and terms which include a number of constituent parts, things or elements, unless otherwise specified, shall be construed as referring separately to each constituent part, thing or element thereof, as well as to all of such constituent parts, things or elements as a whole; (c) words importing any gender include the other genders; (d) references to statutes are to be construed as including all rules and regulations adopted

pursuant to the statute referred to and all statutory provisions consolidating, amending or replacing the statute referred to; (e) references to agreements and other contractual instruments shall be deemed to include all subsequent amendments thereto or changes therein entered into in accordance with their respective terms; (f) the words "hereto" or "herein" or "hereof" or "hereunder" or words of similar import refer to this Note in its entirety; (g) the words "include" or "including" or words of similar import, unless otherwise specified herein, shall be deemed to be followed by the words "without limitation"; (h) all references to Articles and Sections, unless otherwise specified, are to the Articles and Sections of this Note; and (i) headings of Articles and numberings and headings of Sections and paragraphs are inserted as a matter of convenience and shall not affect the construction of this Note.

3. Loan Agreement. The principal sums hereunder are being loaned by Lender to Borrower in accordance with and pursuant to the Loan Agreement. The terms of the Loan Agreement are incorporated herein and made a part hereof to the same extent and with the same force and effect as if fully set forth herein. An Event of Default by Borrower under the Loan Agreement shall be a default hereunder, and a default hereunder, after delivery of notice and expiration of the cure period described in Section 11 below, shall be an Event of Default by Borrower under the Loan Agreement.

4. Inspection of Financial Records. Borrower will permit the representatives of Lender at any time or from time to time, upon one (1) business day's notice and during normal business hours, to inspect, audit and copy all of Borrower's books, records, and accounts relating to the Property.

5. Notices, Certificates or Communications. Immediately upon giving or receipt thereof, Borrower shall furnish or cause to be furnished to Lender copies of any material notices, certificates or other communications given by or on behalf of Borrower or received by or on behalf of Borrower from the Authority or any other Project lender, as well as any material notices and other communications delivered to the Property or to Borrower naming Lender or the "Construction Lender" as addressee.

6. Maturity. All accrued but unpaid interest and outstanding principal under this Note shall be unconditionally due and payable fifty-five (55) years after the latest to occur of the following: (a) the date of the Note, (b) issuance by the City of Los Angeles of the certificate of occupancy for the Project, or (c) recordation of the Certificate of Completion for the Project to be issued by the Authority pursuant to the Amended DDA (the “Maturity Date”).

7. Payments. Borrower shall make annual payments hereunder solely from available Cash Flow or Capital Transaction proceeds (as such terms are defined in Borrower’s Amended and Restated Operating Agreement (the “Operating Agreement”)) as specified in the Operating Agreement. Payments shall be applied first to accrued but unpaid interest on the Note and shall then be used to repay any outstanding principal due on the Note.

8. Form of Payment. All amounts due hereunder are payable in immediately available funds and lawful monies of the United States of America.

9. Prepayment. At any time, Borrower may prepay in whole or in part, without penalty, the outstanding principal balance and accrued interest under this Note.

10. Security. This Note and all amounts payable hereunder are secured by the Deed of Trust. The terms of the Deed of Trust are incorporated herein and made a part hereof to the same extent and with the same force and effect as if fully set forth herein. A default under any of the provisions of the Deed of Trust shall be a default hereunder, and a default hereunder shall be a default under the Deed of Trust.

11. Acceleration and Other Remedies.

If:

(i) Borrower defaults under any other provision of this Note and Borrower shall have failed to cure said default within thirty (30) days after notice from Lender, provided, however, if cure of such default reasonably requires more than thirty (30) days, then, provided that Borrower commences to cure within such thirty (30)-day period and thereafter diligently and continuously prosecutes the cure to completion, Borrower shall up to ninety (90) days from receipt of notice from Lender to complete the cure; or

(ii) there is an event or occurrence which, pursuant to the Deed of Trust, gives rise to acceleration of the indebtedness evidenced by this Note,

then the entire principal amount outstanding hereunder and the accrued interest thereon shall at once become due and payable, at the option of Lender.

12. Remedies. Upon the occurrence of an event of default and the expiration of any cure period therefor as provided in this Note without such event of default having been cured, then, at the option of Lender, the entire balance of principal and all accrued interest thereon shall, without demand or notice, but subject to the non-recourse provisions of Section 17 of this Note, immediately become due and payable. No delay or omission on the part of Lender in exercising any right under this Note or under the Deed of Trust shall operate as a waiver of such right.

13. Third Party Cure Rights. Notwithstanding anything to the contrary contained in this Note, Lender, prior to any action to enforce this Note, shall give Borrower's non-managing member and its successors and assigns (the "Tax Credit Investor") and [STRS] notice and opportunity to cure for a period of not less than thirty (30) days.

14. Waiver. Except as otherwise expressly provided herein, Borrower hereby waives diligence, presentment, protest and demand, notice of protest, dishonor and nonpayment of this Note, and expressly agrees that, without in any way affecting the liability of Borrower hereunder, Lender may extend any maturity date or the time for

payment of any installment due hereunder, accept additional security, release any party liable hereunder and release any security now or hereafter securing this Note. Borrower further waives, to the full extent permitted by law, the right to plead any and all statutes of limitations as a defense to any demand on this Note, or on any deed of trust, security agreement, lease assignment, guaranty or other agreement now or hereafter securing this Note.

15. Attorneys' Fees. If this Note is not paid when due or if any event of default occurs, Borrower promises to pay all costs of enforcement and collection, including but not limited to, reasonable attorney's fees, whether or not any action or proceeding is brought to enforce the provisions hereof.

16. Severability. Every provision of this Note is intended to be severable. In the event any term or provision hereof is declared by a court of competent jurisdiction to be illegal or invalid for any reason whatsoever, such illegality or invalidity shall not affect the balance of the terms and provisions hereof, which terms and provisions shall remain binding and enforceable.

17. Non-Recourse. Notwithstanding anything to the contrary contained in this Note or in the Deed of Trust, but without in any manner affecting the validity of this Note or the lien or charge of the Deed of Trust, in the event of any default under the terms of this Note or the Deed of Trust, the sole recourse of the Lender for any and all such defaults shall be by judicial foreclosure or by the exercise of the trustee's power of sale, or such other appropriate means of enforcing the Deed of Trust, and the undersigned, and the officers, members, managers, directors, employees or agents of the undersigned, as well as their respective officers, members, managers, directors, employees, agents, partners, or shareholders, shall not be personally liable for the payment of this Note or for any other default under the Deed of Trust or for the payment of any deficiency established after judicial foreclosure or trustee's sale under the Deed of Trust. Notwithstanding the limitations of liability set forth above, Borrower shall be fully liable for all legal costs and expenses reasonably incurred by Lender in the enforcement of this Note.

18. Giving of Notice.

Unless applicable law requires a different method, any notice that must be given to Borrower under this Note shall be given by mailing it by first class mail to Borrower at the following address:

Grand Avenue M Housing Partners, LLC
c/o The Related Companies of California
18201 Von Karman Avenue, Suite 900
Irvine, California 92612
Attention: William A. Witte

With a copy to: BF Grand Avenue, LP
c/o Boston Financial Investment Management, LP
101 Arch Street, 13th Floor

Boston, MA 02110
Attention: Asset Management -- Parcel M Grand Avenue Apartments

And a copy to: Holland & Knight LLP
10 St. James Avenue
Boston, MA 02116
Attn: James E. McDermott, Esq.

And a copy to: Bocarsly Emden Cowan Esmail & Arndt LLP
633 West Fifth Street, 70th Floor
Los Angeles, CA 90071
Attention: Lance Bocarsly

or at a different address if Borrower gives Lender a notice of that different address.

Any notice that must be given to Lender under this Note shall be given by mailing it by first class mail to Lender at the following address:

Urban Funding, Inc.
c/o The Related Companies of California
18201 Von Karman Avenue, Suite 900
Irvine, California 92612
Attention: William A. Witte

or at a different address if Lender gives Borrower a notice of that different address.

19. Choice of Law. This Note shall be governed by and construed and enforced in accordance with the laws of the State of California.

20. Counterparts. This Note may be executed in several counterparts, each of which shall be deemed to be an original copy and all of which together shall constitute one agreement binding on all parties hereto, notwithstanding that all the parties shall not have signed the same counterpart.

[*signatures appear on the following page*]

IN WITNESS WHEREOF, Borrower has executed this Promissory Note as of the date as first written above.

Borrower:

GRAND AVENUE M HOUSING PARTNERS, LLC, a California limited liability company

By: Related/Parcel M Development Co., LLC, a California limited liability company, its manager

By: _____
William A. Witte
President

EXHIBIT C

DEED OF TRUST

[Attached]

RECORDING REQUESTED BY
AND WHEN RECORDED RETURN TO:

Urban Funding, Inc.
c/o The Related Companies of California
18201 Von Karman Avenue, Suite 900
Irvine, California 92612

DEED OF TRUST WITH ASSIGNMENT OF RENTS
[Grand Avenue - Phase IIB]

This DEED OF TRUST WITH ASSIGNMENT OF RENTS ("Deed of Trust") is made as of December __, 2012, by and between GRAND AVENUE M HOUSING PARTNERS, LLC, a California limited liability company ("Trustor"), OLD REPUBLIC TITLE INSURANCE COMPANY, a California corporation ("Trustee"), and URBAN FUNDING, INC., a California corporation ("Beneficiary").

Trustor grants, transfers and assigns to Trustee in trust, upon the trusts, covenants, conditions and agreements and for the uses and purposes hereinafter contained, with power of sale, and right of entry and possession, all of its ground leasehold title and interest in that real property (the "Real Property") in the City of Los Angeles, State of California, described in Exhibit A attached hereto and incorporated herein by this reference.

Together with Trustor's interest in all buildings, structures and improvements of every nature whatsoever now or hereafter situated on the Real Property; and

Together with the rents, issues and profits thereof; and together with all buildings and improvements of every kind and description now or hereafter erected or placed thereon, and all fixtures, including but not limited to all gas and electric fixtures, engines and machinery, radiators, heaters, furnaces, heating equipment, laundry equipment, steam and hot-water boilers, stoves, ranges, elevators and motors, bathtubs, sinks, water closets, basins, pipes, faucets and other plumbing and heating fixtures, mantles, cabinets, refrigerating plant and refrigerators, whether mechanical or otherwise, cooking apparatus and appurtenances, and all shades, awnings, screens, blinds and other furnishings, it being hereby agreed that all such fixtures and furnishings shall to the extent permitted by law be deemed to be permanently affixed to and a part of the realty; and

Together with all building materials and equipment now or hereafter delivered to said premises and intended to be installed therein; and

Together with all plans, drawings, specifications, and articles of personal property now or hereafter attached to or used in and about the building or buildings now erected or

hereafter to be erected on the Real Property which are necessary to the completion and comfortable use and occupancy of such building or buildings for the purposes for which they were or are to be erected, including all other goods and chattels and personal property as are ever used or furnished in operating a building, or the activities conducted therein, similar to the one herein described and referred to, and all renewals or replacements thereof or articles in substitution therefor, whether or not the same are, or shall be attached to said building or buildings in any manner;

To have and to hold the property hereinbefore described (including the Real Property and all appurtenances), all such property being referred to collectively herein as the "Property," to Trustee, its successors and assigns forever.

FOR THE PURPOSE of securing (1) payment of indebtedness of Trustor to the Beneficiary in the principal sum of [Seven Million Nine Hundred Thousand Dollars ($7,900,000)] (the "Authority Loan"), evidenced by a promissory note of even date herewith from Trustor to Beneficiary (the "Note") and a loan agreement of even date herewith between Trustor and Beneficiary (the "Loan Agreement"), together with all sums due thereunder; and (2) the performance of each agreement of Trustor in this Deed of Trust, the Note and the Loan Agreement (collectively, the "Authority Loan Documents"). Said Note and Loan Agreement and all of their terms are incorporated herein by reference and this conveyance shall secure any and all extensions, amendments, modifications or renewals thereof however evidenced, and additional advances of the Authority Loan evidenced by any note reciting that it is secured hereby.

AND TO PROTECT THE SECURITY OF THIS DEED OF TRUST, TRUSTOR COVENANTS AND AGREES:

1. That it will pay the Note at the time and in the manner provided therein;

21. That it will not permit or suffer the use of any of the Property for any purpose other than the use for which the same was intended at the time this Deed of Trust was executed;

22. That the Note and Loan Agreement are incorporated herein and made a part of this Deed of Trust. Upon default under any Authority Loan Documents (after expiration of any applicable cure rights), Beneficiary, at its option, may declare the whole of the indebtedness secured hereby to be due and payable;

23. That all rents, profits and income from the Property covered by this Deed of Trust are hereby assigned to Beneficiary for the purpose of discharging the debt hereby secured. Permission is hereby given to Trustor so long as no default exists hereunder, to collect such rents, profits and income;

24. That upon default hereunder (after expiration of any applicable cure rights), Beneficiary shall be entitled to the appointment of a receiver by any court having jurisdiction, without notice, to take possession and protect the Property described herein and operate same and collect the rents, profits and income therefrom;

25. That Trustor will keep the improvements now existing or hereafter erected on the Property insured against loss by fire and such other hazards, casualties and contingencies as may be required in writing from time to time by Beneficiary, and all such insurance shall be evidenced by standard fire and extended coverage insurance policy or policies, in the amount of the replacement value of the improvements. Such policies shall be endorsed with a standard mortgage clause with loss payable to Beneficiary subordinate to the rights and interest of the beneficiary of any senior lenders;

26. To pay, before delinquency, any taxes and assessments affecting said Property when due, all encumbrances, charges and liens, with interest, on said Property or any part thereof which appear to be prior or superior hereto, all costs, fees and expenses of this Deed of Trust;

27. To keep said Property in good condition and repair, not to remove or demolish any buildings thereon; to complete or restore promptly and in good and workmanlike manner any building which may be constructed, damaged, or destroyed thereon and to pay when due all claims for labor performed and materials furnished therefor (unless contested in good faith if Trustor provides security satisfactory to Beneficiary that any amounts found to be due will be paid and no sale of the Property or other impairment of the security hereunder will occur); to comply with all laws affecting said Property or requiring any alterations or improvements to be made thereon; not to commit or permit waste thereof; not to commit, suffer or permit any act upon said Property in violation of law and/or covenants, conditions and/or restrictions affecting said Property;

28. To appear in and defend any action or proceeding purporting to affect the security hereof or the rights or powers of Beneficiary or Trustee, and to pay all costs and expenses, including cost of evidence of title and attorneys' fees in a reasonable sum, in any such action or proceeding in which Beneficiary or Trustee may appear;

29. Should Trustor fail to make any payment or do any act as herein provided, then Beneficiary or Trustee, but without obligation so to do and without notice to or demand upon Trustor and without releasing Trustor from any obligation hereof, may make or do the same in such manner and to such extent as either may deem necessary to protect the security hereof. Beneficiary or Trustee, being authorized to enter upon said Property for such purposes, may commence, appear in and/or defend any action or proceeding purporting to affect the security hereof or the rights or powers of Beneficiary or Trustee; may pay, purchase, contest or compromise any encumbrance, charge, or lien which in the judgment of either appears to be prior or superior hereto; and, in exercising any such powers, may pay necessary expenses, employ counsel, and pay counsel's reasonable fees;

30. That Beneficiary shall have the right to pay fire and other property insurance premiums when due should Trustor fail to make any required premium payments. All such payments made by Beneficiary shall be added to the principal sum secured hereby;

31. To pay immediately and without demand all sums so expended by Beneficiary or Trustee, under permission given under this Deed of Trust from the date of expenditure;

32. That the Authority Loan advanced hereunder is to be used in the development of the Property; and upon the failure of Trustor to keep and perform such covenants, the principal sum and all accrued but unpaid interest shall, at the option of Beneficiary, become due and payable, anything contained herein to the contrary notwithstanding;

33. Trustor further covenants that it will not voluntarily create, suffer or permit to be created against the Property, subject to this Deed of Trust, any lien or liens except as authorized by Beneficiary and further that it will keep and maintain the Property free from the claims of all persons supplying labor or materials which will enter into the construction of any and all buildings now being erected or to be erected on the Property;

34. That any and all improvements made or about to be made upon the Property, and all plans and specifications, comply with all applicable municipal ordinances and regulations and all other regulations made or promulgated, now or hereafter, by lawful authority, and that the same will upon completion comply with all such municipal ordinances and regulations and with the rules of the applicable fire rating or inspection organization, bureau, association or office; and

35. To pay to Beneficiary or to the authorized loan servicing representative of Beneficiary a charge not to exceed that permitted by law for providing a statement regarding the obligation secured by this Deed of Trust as provided by Section 2954, Article 2, Chapter 2, Title 14, Division 3 of the California Civil Code.

IT IS MUTUALLY AGREED THAT:

36. In the event of any fire or other casualty to the Project or eminent domain proceedings resulting in condemnation of the Project or any part thereof, Trustor shall have the right to rebuild the Project, and to use all available insurance or condemnation proceeds therefor, provided that (a) such proceeds are sufficient to rebuild the Project in a manner that provides adequate security to Beneficiary for repayment of the Authority Loan or if such proceeds are insufficient then Trustor shall have funded any deficiency, and (b) no uncured material default then exists under the Authority Loan Documents. If the casualty or condemnation affects only part of the Project and total rebuilding is infeasible, then proceeds may be used for partial rebuilding and partial repayment of the Authority Loan in a manner that provides adequate security for repayment of the remaining balance of the Authority Loan. The rights of the Beneficiary to any insurance proceeds or condemnation awards pursuant to this Paragraph 17 are and shall be subject to the prior right to any insurance proceeds or condemnation awards of the beneficiary of any senior lender.

37. Upon Trustor's failure to perform any covenant or agreement in this Deed of Trust within thirty (30) days after written demand therefor by Beneficiary (or, in the event

that more than thirty (30) days is reasonably required to cure such default, should Trustor fail to promptly commence such cure, and diligently prosecute same to completion within ninety (90) days from receipt of written demand from Lender), Beneficiary may declare all sums secured hereby immediately due and payable by delivery to Trustee of written declaration of default and demand for sale, and of written notice of default and of election to cause the Property to be sold, which notice Trustee shall cause to be duly filed for record and Beneficiary may foreclose this Deed of Trust. Beneficiary shall also deposit with Trustee this Deed of Trust, the Note, the Loan Agreement and all documents evidencing expenditures secured hereby.

38. After the lapse of such time as may then be required by law following the recordation of said notice of default, and notice of sale having been given as then required by law, Trustee, without demand on Trustor, shall sell said Property at the time and place fixed by it in said notice of sale at public auction to the highest bidder for cash in lawful money of the United States, payable at time of sale. Trustee may postpone sale of all or any portion of said Property by public announcement at the time and place of sale, and from time to time thereafter may postpone the sale by public announcement at the time fixed by the preceding postponement. Trustee shall deliver to the purchaser its deed conveying the property so sold, but without any covenant or warranty, express or implied. The recitals in the deed of any matters or facts shall be conclusive proof of the truthfulness thereof. Any person, including Trustor, Trustee or Beneficiary, may purchase at the sale. Trustee shall apply the proceeds of sale to payment of (1) the expenses of such sale, together with the reasonable expenses of this trust including therein reasonable Trustee's fees or attorneys' fees for conducting the sale, and the actual cost of publishing, recording, mailing and posting notice of the sale; (2) the cost of any search and/or other evidence of title procured in connection with such sale and revenue stamps on Trustee's deed; (3) all sums expended under the terms hereof, not then repaid; (4) all other sums then secured hereby; and (5) the remainder, if any, to the person or persons legally entitled thereto.

39. Beneficiary may from time to time substitute a successor or successors to any Trustee named herein or acting hereunder to execute this Deed of Trust. Upon such appointment, and without conveyance to the successor trustee, the latter shall be vested with all title, powers, and duties conferred upon any Trustee herein named or acting hereunder. Each such appointment and substitution shall be made by written instrument executed by Beneficiary, containing reference to this Deed of Trust and its place of record, which, when duly recorded in the proper office of the county or counties in which the property is situated, shall be conclusive proof of proper appointment of the successor trustee.

40. The pleading of any statute of limitations as a defense to any and all obligations secured by this Deed of Trust is hereby waived to the full extent permissible by law.

41. Upon written request of Beneficiary stating that all sums secured hereby have been paid, and upon surrender of this Deed of Trust and the Authority Loan to Trustee for cancellation and retention and upon payment of its fees, Trustee shall

reconvey, without warranty, the property then held hereunder. The recitals in such reconveyance of any matters of fact shall be conclusive proof of the truthfulness thereof. The grantee in such reconveyance may be described as "the person or persons legally entitled thereto".

42. The trust created hereby is irrevocable by Trustor.

43. This Deed of Trust applies to, inures to the benefit of, and binds all parties hereto, their heirs, legatees, devisees, administrators, executors, successors, and assigns. The term "Beneficiary" shall include not only the original Beneficiary hereunder but also any future owner and holder including pledgees, of the Note secured hereby. In this Deed of Trust, whenever the context so requires, the masculine gender includes the feminine and/or neuter, and the singular number includes the plural. All obligations of each Trustor hereunder are joint and several.

44. Trustee accepts this trust when this Deed of Trust, duly executed and acknowledged, is made public record as provided by law. Except as otherwise provided by law, Trustee is not obligated to notify any party hereto of pending sale under this Deed of Trust or of any action or proceeding in which Trustor, Beneficiary, or Trustee shall be a party unless brought by Trustee.

45. Copies of any notice of default and of any notice of sale hereunder shall be mailed to Trustor c/o The Related Companies of California, 18201 Von Karman Avenue, Suite 900, Irvine, California 92612 and to BF Grand Avenue, LP, c/o Boston Financial Investment Management, LP, 101 Arch Street, 13th Floor, Boston, MA 02110, Attention: Asset Management -- Parcel M Grand Avenue Apartments; with a copy to Holland & Knight LLP, 10 St. James Avenue, Boston, MA 02116, Attn: James E. McDermott, Esq.

46. (a) Unless otherwise approved by Lender in writing, the full principal amount outstanding on the Authority Loan and all accrued but unpaid interest shall be due and payable, as more particularly provided in the Note, upon the Sale (as defined below) or refinancing of the Property, as provided further in this Paragraph 27; unless: (i) in the case of a Sale in which the Sale proceeds are insufficient to repay in full the Authority Loan, the Beneficiary approves such Sale and the purchaser assumes the balance of the Authority Loan in accordance with the terms of the Note; or (ii) in the case of a refinancing in which the refinancing proceeds are insufficient to repay in full the Authority Loan, the Beneficiary approves such refinancing and the Borrower remains obligated pursuant to the terms of the Note.

(b) In order to induce Beneficiary to make the loan evidenced hereby, Trustor agrees that in the event of any transfer of the Property without the prior written consent of Beneficiary (other than a transfer resulting from a foreclosure, or conveyance by deed in lieu of foreclosure, by any senior lender), Beneficiary shall have the absolute right at its option, without prior demand or notice, to declare all sums secured hereby immediately due and payable. Consent to one such transaction shall not be deemed to be a waiver of the right to require consent to future or successive transactions. Beneficiary may grant or deny such consent in its sole discretion and, if consent should be given, any

such transfer shall be subject to this Paragraph 27, and any such transferee shall assume all obligations hereunder and agree to be bound by all provisions contained herein. Such assumption shall not, however, release Trustor from any liability thereunder without the prior written consent of Beneficiary.

(c) As used herein, "transfer" includes the sale, agreement to sell, transfer or conveyance of the Property, or any portion thereof or interest therein, whether voluntary, involuntary, by operation of law or otherwise, the execution of any installment land sale contract or similar instrument affecting all or a portion of the Property, or the lease of all or substantially all of the Property. "Transfer" shall not include the leasing of individual residential units on the Property or transfers of membership interests in Trustor (whether direct or indirect, whole or in part).

(d) The term "Sale" means any transfer, assignment, conveyance or lease (other than to a tenant for occupancy) of the Property and/or the improvements thereon, or any portion thereof, or any interest therein by the Trustor. Sale includes a sale in condemnation or under threat thereof other than by Beneficiary. Sale does not include dedications and grants of easements to public and private utility companies of the kind customary in real estate development.

Notwithstanding the foregoing, the following shall not constitute a "Sale" under this Deed of Trust: (a) a sale made pursuant to an option granted to a member of Trustor on or before the date of recordation of this Deed of Trust in the Official Records of Los Angeles County, California.

47. Trustor shall permit Beneficiary and its agents or representatives, to inspect the Property at any and all reasonable times, with or without advance notice. Inspections shall be conducted so as not to interfere with the tenants' use and enjoyment of the Property.

48. (a) For purposes of this Deed of Trust, "Hazardous Materials" mean and include any hazardous, toxic or dangerous waste, substance or material including, without limitation, flammable explosives, radioactive materials, asbestos, hazardous wastes, toxic substances and any materials or substances defined as hazardous materials, hazardous substances or toxic substances in (or for purposes of) the Comprehensive Environmental Response, Compensation and Liability Act of 1380 ("CERCLA"), as amended (42 U.S.C. § 9601, et seq.), the Hazardous Materials Transportation Act (49 U.S.C. § 1801 et seq.), the Resource Conservation and Recovery Act (42 U.S.C. § 6901 et seq.) and those substances defined as hazardous wastes in § 25117 of the California Health and Safety Code or as hazardous substances in § 25316 of the California Health and Safety Code or in any regulations promulgated under either such law, any so-called "Superfund" or "Superlien" law, or any other federal, state or local statute, law, ordinance, code, rule, regulation, order or decree regulating, relating to, or imposing liability or standards of conduct concerning any hazardous, toxic or dangerous waste, substance or material, as now or at any time hereafter in effect. Hazardous Materials expressly exclude substances typically used in the construction, development,

operation and maintenance of an apartment complex provided such substances are used in accordance with all applicable laws.

(b) In addition to the general and specific representations, covenants and warranties set forth in the Deed of Trust or otherwise, Trustor represents, covenants and warrants, with respect to Hazardous Materials that, other than as expressly disclosed to Trustor by Beneficiary, neither Trustor nor, to the best knowledge of Trustor, any other person, has ever caused or permitted any Hazardous Materials to be manufactured, placed, held, located or disposed of on, under or at the Property or any part thereof, and neither the Property nor any part thereof, or any property adjacent thereto, has ever been used (whether by the Trustor or, to the best knowledge of the Trustor, by any other person) as a manufacturing site, dump site or storage site (whether permanent or temporary) for any Hazardous Materials.

49. The following shall be an Event of Default:

(a) Failure of Trustor to repay, when due, the principal amount and interest accrued thereon owed under the Authority Loan in accordance with the provisions set forth in the Note; or

(b) A violation of the terms, conditions or covenants of the Note, the Loan Agreement or this Deed of Trust.

50. Subject to the extensions of time set forth in this Paragraph 31 and Paragraph 32, failure or delay by the Trustor to perform any term or provision of this Deed of Trust constitutes a default under this Deed of Trust. The Trustor must immediately commence to cure, correct, or remedy such failure or delay and shall complete such cure, correction or remedy with reasonable diligence.

(a) The Beneficiary shall give written notice of default to the Trustor, specifying the default complained of by the Beneficiary. Delay in giving such notice shall not constitute a waiver of any default nor shall it change the time of default.

(b) The Trustor shall not be in default so long as it endeavors to complete such cure, correction or remedy with reasonable diligence, provided such cure, correction or remedy is completed within thirty (30) days after receipt of written notice (or such additional time as is reasonably necessary to correct the cause).

(c) Any failures or delays by the Beneficiary in asserting any of its rights and remedies as to any default shall not operate as a waiver of any default or of any such rights or remedies. Delays by the Beneficiary in asserting any of its rights and remedies shall not deprive the Beneficiary of its right to institute and maintain any actions or proceedings which it may deem necessary to protect, assert, or enforce any such rights or remedies.

(d) Notwithstanding anything to the contrary contained in this Deed of Trust, Trustor, prior to any action to enforce this Deed of Trust, shall give Trustor's non-managing member and its successors and assigns (the "Tax Credit Investor") and

[STRS] notice and opportunity to cure any default for a period of not less than thirty (30) days.

(e) The remedies set forth herein are limited during the Standstill Period, as such term is defined in [Section 11(c)] of the Loan Agreement, and the provisions thereof are expressly incorporated herein by reference.

51. Notwithstanding specific provisions of this Deed of Trust, performance hereunder shall not be deemed to be in default where delays or defaults are due to: war; insurrection; strikes; lock-outs; riots; floods; earthquakes; fires; casualties; acts of God or other deities; acts of the public enemy; epidemics; quarantine restrictions; freight embargoes; lack of transportation; governmental restrictions or priority; litigation; unusually severe weather; inability to secure necessary labor, materials or tools; delays of any contractor or supplier; acts of the other party; acts or failure to act of the Beneficiary, or any other public or governmental agency or entity; or any other causes beyond the reasonable control or without the fault of the party claiming an extension of time to perform. An extension of time for any such cause shall be for the period of the enforced delay and shall commence to run from the time the party claiming such extension gives notice to the other party, provided notice by the party claiming such extension is given within thirty (30) days after the commencement of the cause. Times of performance under this Deed of Trust may also be extended in writing by the Beneficiary and Trustor.

52. Upon the occurrence of an Event of Default as described in Paragraph 30, Trustor shall be obligated to repay the Authority Loan and, subject to the nonrecourse provision of the Note, Beneficiary may seek to enforce payment of any and all amounts due by Trustor pursuant to the terms of the Authority Loan Documents.

53. All expenses (including reasonable attorneys' fees and costs and allowances) incurred in connection with an action to foreclose, or the exercise of any other remedy provided by this Deed of Trust, including the curing of any Event of Default, shall be the responsibility of Trustor.

54. Trustor and the California Tax Credit Allocation Committee may enter into a Regulatory Agreement (the "TCAC Regulatory Agreement"), which constitutes the extended low-income housing commitment described in Section 42(h)(6)(B) of the Internal Revenue Code, as amended (the "Code"). In the event of a foreclosure of Beneficiary's interest under this Deed of Trust or delivery by the Trustor of a deed in lieu thereof (collectively, a "Foreclosure"), the following rule shall apply: throughout the extended use period specified in the TCAC Regulatory Agreement, with respect to any unit that had been regulated by the TCAC Regulatory Agreement, (i) none of the eligible tenants occupying those units at the time of Foreclosure may be evicted or their tenancy terminated (other than for good cause, including but not limited to, the tenants' ineligibility pursuant to regulations of the Section 42 of the Code), and (ii) nor may any rent be increased except as otherwise permitted under Section 42 of the Code.

55. This Deed of Trust may be executed in several counterparts, each of which shall be deemed to be an original copy and all of which together shall constitute one agreement binding on all parties hereto, notwithstanding that all the parties shall not have signed the same counterpart.

[*signatures appear on the following page*]

IN WITNESS WHEREOF, Trustor has executed this Deed of Trust as of the date as first written above.

Trustor:

GRAND AVENUE M HOUSING PARTNERS, LLC, a California limited liability company

By: Related/Parcel M Development Co., LLC, a California limited liability company, its manager

By: _____
William A. Witte
President

EXHIBIT A TO DEED OF TRUST

LEGAL DESCRIPTION

[Attached]

EXHIBIT D

SUBORDINATION AGREEMENT

[Attached]

RECORDING REQUESTED BY
AND WHEN RECORDED MAIL TO:

Urban Funding, Inc.
c/o The Related Companies of California
18201 Von Karman Avenue, Suite 900
Irvine, California 92612

THE SPACE ABOVE FOR RECORDER'S USE ONLY

SUBORDINATION AGREEMENT

SUBORDINATION AGREEMENT
[Grand Avenue - Phase IIB]

This Subordination Agreement (this "Agreement"), is dated for reference purposes only _____, 201__, by and among, URBAN FUNDING, INC., a California corporation ("Lender"), GRAND AVENUE M HOUSING PARTNERS, LLC, a California limited liability company ("Affordable Owner"), and GRAND AVENUE M URBAN HOUSING, LLC, a California limited liability company ("Market Rate Owner"), with reference to the following:

WHEREAS, Lender made a loan to Affordable Owner (the "Loan"), which loan is evidenced by a promissory note (the "Note"), executed December __, 2012 in the original principal sum of [Seven Million Nine Hundred Thousand Dollars ($7,900,000)], made by Affordable Owner in favor of Lender, and governed by that certain Loan Agreement, executed by Borrower and Lender, dated as of December __, 2012 (the "Loan Agreement");

WHEREAS, the Loan is secured by that certain Deed of Trust with Assignment of Rents (the "Deed of Trust") dated December __, 2012, executed by Affordable Owner, as trustor, and recorded on December __, 2012, as Instrument No. _____, in the Official Records of Los Angeles County, State of California (the "Official Records"), which encumbers that certain real property described therein (the "Original Property");

WHEREAS, CRA/LA, a designated local authority ("CRA/LA"), and The Los Angeles Grand Avenue Authority, a California joint powers authority (the "Authority") entered into that certain [Ground Lease], dated as of December __, 2012 (the "Lease"), pursuant to which CRA/LA leased to the Authority, and the Authority leased from CRA/LA, the Original Property;

WHEREAS, the Authority and Borrower entered into that certain Ground Lease, dated as of December __, 2012 (the "Sublease"), pursuant to which the Authority subleased to Borrower, and Borrower subleased from the Authority, the Original Property;

WHEREAS, the Affordable Owner has caused the subdivision of the Original Property into multiple legal parcels, and has recorded that certain Parcel Map _____ in Official Records on _____, 201__, in Book ____, Page ____ (the "Parcel Map"). The Parcel Map includes a new legal description for each of the new separate legal parcels, which new legal description is attached hereto as Exhibit A. Parcels _____ of the Parcel Map are the "Market Rate Project Parcels," upon which the Market Rate Improvements (as such term is defined in the Loan Agreement) will be located. Parcels _____ of the Parcel Map are the "Affordable Project Parcels," upon which the Affordable Units (as defined in the Loan Agreement) will be located. The Market Rate Project Parcels and the Affordable Project Parcels are collectively referred to herein as the "Property");

WHEREAS, Affordable Owner, Market Rate Owner, CRA/LA and the Authority have entered into and recorded a Reciprocal Easement Agreement setting forth certain covenants, conditions and restrictions for the mutual and reciprocal benefit and complement of the Affordable Project Parcels and the Market Rate Project Parcels, and the present and future owners and occupants thereof (the "REA"); and

WHEREAS, the parties hereto have agreed to execute this Agreement in order to provide for, among other things, the subordination of the Deed of Trust to the Parcel Map and the REA.

NOW, THEREFORE, in consideration of the mutual benefits accruing to the parties hereto, and other valuable consideration, the receipt and sufficiency of which is acknowledged, the parties agree as follows:

1. The Parcel Map and the REA, and any modifications thereof, shall unconditionally be and remain at all times an encumbrance upon the Property prior and superior to the lien or charge of the Deed of Trust.

56. Lender acknowledges and agrees that it hereby intentionally and unconditionally subordinates the lien or charge of the Deed of Trust in favor of the Parcel Map and REA recording concurrently herewith.

57. This Agreement shall be interpreted in accordance with and governed in all respects by the laws of the State of California.

58. If any provision or part of any provision of this Agreement is for any reason held to be invalid, unenforceable, or contrary to any public policy, law, statute, and/or ordinance, the remainder of this Agreement shall not be affected thereby and shall remain valid and fully enforceable.

59. This Agreement, and each of its terms, may not be altered, amended, or modified in any respect, except by a writing duly executed by the party to be charged. All prior agreements and understandings, whether oral or in writing, are expressly superseded hereby and are of no further force or effect.

60. To the extent that the effectuation of any part of the Agreement requires any party hereto to execute any further documentation or take any further actions, each party agrees to execute and deliver such other and further documents and to timely take such actions as may be required to carry out the terms of the Agreement.

61. The provisions of this Agreement shall be binding upon and inure to the benefit of the parties hereto and their respective heirs, executors, administrators, successors and assigns.

62. This Agreement may be executed in counterparts, each of which shall be an original and all of which shall constitute one agreement.

63. This Agreement and the terms and conditions contained herein shall be effective upon the recording thereof.

[document continues on following page]

IN WITNESS WHEREOF, the authorized representatives of the undersigned parties have executed this Agreement as of the date set forth above.

Lender:

URBAN FUNDING, INC., a California corporation

By: _____
William A. Witte
President

Affordable Owner:

GRAND AVENUE M HOUSING PARTNERS, LLC, a California limited liability company

By: Related/Parcel M Development Co., LLC, a California limited liability company, its manager

By: _____
William A. Witte
President

Market Rate Owner:

GRAND AVENUE M URBAN HOUSING, LLC, a California limited liability company

By: [_____]

By: _____
[Name]
[Title]

ACKNOWLEDGMENT

STATE OF CALIFORNIA)
)
COUNTY OF _____)

On _____, before me, _____, a Notary Public, personally appeared _____ who proved to me on the basis of satisfactory evidence to be the person(s) whose name(s) is/are subscribed to the within instrument and acknowledged to me that he/she/they executed the same in his/her/their authorized capacity(ies), and that by his/her/their signature(s) on the instrument the person(s), or the entity upon behalf of which the person(s) acted, executed the instrument.

I certify under PENALTY OF PERJURY under the laws of the State of California that the foregoing paragraph is true and correct.

WITNESS my hand and official seal.

Signature_____

SEAL

ACKNOWLEDGMENT

STATE OF CALIFORNIA)
)
COUNTY OF _____)

On _____, before me, _____, a Notary Public, personally appeared _____ who proved to me on the basis of satisfactory evidence to be the person(s) whose name(s) is/are subscribed to the within instrument and acknowledged to me that he/she/they executed the same in his/her/their authorized capacity(ies), and that by his/her/their signature(s) on the instrument the person(s), or the entity upon behalf of which the person(s) acted, executed the instrument.

I certify under PENALTY OF PERJURY under the laws of the State of California that the foregoing paragraph is true and correct.

WITNESS my hand and official seal.

Signature_____

SEAL

ACKNOWLEDGMENT

STATE OF CALIFORNIA)
)
COUNTY OF _____)

On _____, before me, _____, a Notary Public, personally appeared _____ who proved to me on the basis of satisfactory evidence to be the person(s) whose name(s) is/are subscribed to the within instrument and acknowledged to me that he/she/they executed the same in his/her/their authorized capacity(ies), and that by his/her/their signature(s) on the instrument the person(s), or the entity upon behalf of which the person(s) acted, executed the instrument.

I certify under PENALTY OF PERJURY under the laws of the State of California that the foregoing paragraph is true and correct.

WITNESS my hand and official seal.

Signature_____

SEAL

EXHIBIT A

New Legal Description of Property Pursuant to Parcel Map

EXHIBIT E

SUBSTITUTION OF TRUSTEE AND PARTIAL RECONVEYANCE

[Attached]

RECORDING REQUESTED BY
AND WHEN RECORDED MAIL TO:

Urban Funding, Inc.
c/o The Related Companies of California
18201 Von Karman Avenue, Suite 900
Irvine, California 92612

THE SPACE ABOVE FOR RECORDER'S USE ONLY

SUBSTITUTION OF TRUSTEE AND PARTIAL RECONVEYANCE

SUBSTITUTION OF TRUSTEE AND PARTIAL RECONVEYANCE
[Grand Avenue - Phase IIB]

This Substitution of Trustee and Partial Reconveyance ("Partial Reconveyance") is made and entered into as of _____, 201__. URBAN FUNDING, INC., a California corporation ("Lender"), appoints Lender as Trustee ("Trustee"), in lieu of OLD REPUBLIC TITLE INSURANCE COMPANY, a California corporation, pursuant to Section 20 of that certain Deed of Trust with Assignment of Rents (the "Deed of Trust"), executed by GRAND AVENUE M HOUSING PARTNERS, LLC, a California limited liability company ("Borrower"), in favor of Lender as beneficiary and secured party, dated December __, 2012, and recorded December __, 2012, as Instrument No. _____ in the Official Records of Los Angeles County, State of California ("Official Records").

Borrower has caused the subdivision of the property subject to the Deed of Trust, into multiple legal parcels, and has recorded that certain Parcel Map _____ in Official Records on _____, 201__, in Book ____, Page ____ (the "Parcel Map"). The Parcel Map includes a new legal description for each of the new separate legal parcels, which new legal description is attached hereto as Exhibit A. Parcels _____ of the Parcel Map are the "Market Rate Project Parcels," upon which the Market Rate Improvements (as defined in that certain Loan Agreement (the "Loan Agreement"), executed by Lender and Borrower, dated December __, 2012) will be located. Parcels _____ of the Parcel Map are the "Affordable Project Parcels," upon which the Affordable Units (as defined in the Loan Agreement) will be located. The Market Rate Project Parcels and the Affordable Project Parcels are collectively referred to herein as the "Property").

Borrower, Grand Avenue M Urban Housing, LLC, a California limited liability company, CRA/LA, a designated local authority, and The Los Angeles Grand Avenue Authority, a California joint powers authority have entered into and recorded a Reciprocal Easement Agreement setting forth certain covenants, conditions and restrictions for the mutual and reciprocal benefit and complement of the Affordable Project Parcels and the Market Rate Project Parcels, and the present and future owners and occupants thereof; and

Lender hereby reconveys, without warranty, to the person or persons legally entitled thereto, the Market Rate Project Parcels, consisting of that portion of the Property encumbered by the Deed of Trust and newly described on the Parcel Map as Parcels _____, as more particularly described in Exhibit B attached hereto and incorporated herein by this reference.

It is expressly agreed and understood that this is a PARTIAL RECONVEYANCE and that the same shall in no way release, affect or impair said lien against any other property described in the Deed of Trust. The Deed of Trust shall be in full force and effect as against all the other property described therein, except the property described on Exhibit B, which is released hereby.

IN WITNESS WHEREOF, the undersigned has executed this document as of the date set forth above.

Lender:

URBAN FUNDING, INC., a California corporation

By: _____
William A. Witte
President

ACKNOWLEDGMENT

STATE OF CALIFORNIA)
)
COUNTY OF _____)

On _____, before me, _____, a Notary Public, personally appeared _____ who proved to me on the basis of satisfactory evidence to be the person(s) whose name(s) is/are subscribed to the within instrument and acknowledged to me that he/she/they executed the same in his/her/their authorized capacity(ies), and that by his/her/their signature(s) on the instrument the person(s), or the entity upon behalf of which the person(s) acted, executed the instrument.

I certify under PENALTY OF PERJURY under the laws of the State of California that the foregoing paragraph is true and correct.

WITNESS my hand and official seal.

Signature_____

SEAL

EXHIBIT A

New Legal Description of Property Pursuant to Parcel Map

EXHIBIT B

Legal Description of Parcels Being Reconveyed

Document comparison by Workshare Compare on Tuesday, November 20, 2012 6:51:53 PM

Input:	
Document 1 ID	file://H:\Parcel M\Revised documents\abLoan Agreement (Grand Avenue - Phase IIB).docx
Description	abLoan Agreement (Grand Avenue - Phase IIB)
Document 2 ID	interwovenSite://VMLADMSSERVER/LAIDB/50056153/7
Description	#50056153v7<LAIDB> - Loan Agreement (Grand Avenue - Phase IIB)
Rendering set	Standard

Legend:	
Insertion	
~~Deletion~~	
~~Moved from~~	
Moved to	
Style change	
Format change	
~~Moved deletion~~	
Inserted cell	
Deleted cell	
Moved cell	
Split/Merged cell	
Padding cell	

Statistics:	
	Count
Insertions	20
Deletions	24
Moved from	2
Moved to	2
Style change	0
Format changed	0
Total changes	48

GRANT AGREEMENT
[Grand Avenue - Phase IIB]
(Authority Grant)

THIS GRANT AGREEMENT, dated as of December __, 2012 for identification purposes only (the "Grant Agreement"), is made and entered into by and between the THE LOS ANGELES GRAND AVENUE AUTHORITY, a California joint powers authority (the "Authority"), and URBAN FUNDING, INC., a California corporation ("Lender"), with reference to the following:

R E C I T A L S

A. **WHEREAS**, the Authority and Grand Avenue L.A., LLC, a Delaware limited liability company ("Developer") are parties to that certain Disposition and Development Agreement, dated as of March 5, 2007 (the "Original DDA"), as amended by that certain First Amendment to Disposition and Development Agreement, dated as of August 23, 2010, to which The Broad Collection, a California nonprofit public benefit corporation ("Phase IIA Developer") is also a party (the "First DDA Amendment"), that certain Second Amendment to Disposition and Development Agreement, dated as of May 31, 2011 (the "Second DDA Amendment"), and that certain Third Amendment to Disposition and Development Agreement, dated as of _____, 2012, to which Grand Avenue M Housing Partners, LLC, a California limited liability company ("Phase IIB Developer") is also a party (the "Third DDA Amendment"). The Original DDA, as amended by the First DDA Amendment, the Second DDA Amendment, and the Third DDA Amendment is referred to herein as the "Amended DDA." The Amended DDA contemplates the development of multiple parcels of land in multiple phases;

B. **WHEREAS**, pursuant to the Amended DDA, and that certain sub-ground lease by and between the Authority, as landlord, and the Phase IIB Developer, as tenant (the "Ground Lease"), the Phase IIB Developer intends to cause the construction of a single structure on that certain real property located in the City of Los Angeles, State of California, as more particularly and legally set forth in the legal description attached hereto as Exhibit A and incorporated herein by this reference (the "Property"), which will include approximately fifty-six (56) affordable rental units (including one manager's unit) (the "Affordable Housing Component"), approximately two hundred fifteen (215) market-rate rental units, approximately _____ square feet of indoor and outdoor retail and dining space and a parking structure containing approximately 280 parking spaces (~~the "Project"~~)collectively, the "Market Rate Component"). The Affordable Housing Component and the Market Rate Component are collectively referred to as the "Project";

C. **WHEREAS**, pursuant to the Amended DDA, the Phase IIA Developer previously made a payment to the Authority in the amount of Seven Million Seven Hundred Thousand Dollars ($7,700,000) (the "Original Grant"), which Original Grant is being held by the County Treasurer for the benefit of the Authority and, together with all interest accrued to date, ~~the~~such funds~~ are an amount~~ equal~~ to~~ [Seven Million Nine Hundred Thousand Dollars ($7,900,000)] (the "Grant Funds");

D. **WHEREAS**, the Authority desires to make a grant of the Grant Funds to Lender in order for Lender to make a loan in the same amount as the Grant Funds to the Phase IIB Developer as more particularly set forth below (the "Phase IIB Loan"). The Phase IIB Developer will use the ~~funds~~Phase IIB Loan to finance a portion of the construction costs of the ~~Project~~Affordable Housing Component; and

E. **WHEREAS**, Authority and Lender desire to enter into this Grant Agreement to set forth their rights and obligations with respect to such grant.

NOW, THEREFORE, for and in consideration of the mutual promises, covenants, and conditions herein contained, Authority and Lender agree as follows:

1. **DEFINITIONS AND INTERPRETATION**

1.1 **Defined Terms**. Capitalized words and terms used in this Grant Agreement and not defined in this Grant Agreement (including, without limitation, in the Recitals above) shall have the meanings ascribed thereto in the Amended DDA. Other capitalized words and terms used in this Grant Agreement shall have the meanings ascribed thereto where first used.

1.2 **Singular and Plural Terms**. Any defined term used in the plural in this Grant Agreement shall refer to all members of the relevant class and any defined term used in the singular shall refer to any number of the members of the relevant class.

1.3 **References and Other Terms**. References herein to Articles, Sections and Exhibits shall be construed as references to this Grant Agreement unless a different document is named. References to subparagraphs shall be construed as references to the same Section in which the reference appears. The terms "including" and "include" mean "including (include) without limitation".

1.4 **Exhibits Incorporated**. All attachments to this Grant Agreement, as now existing and as the same may from time to time be modified, are incorporated herein by this reference.

2. **PARTIES**

2.1 **Authority**. The Authority is The Los Angeles Grand Avenue Authority, a California joint powers authority. The principal offices of the Authority are located at [_____].

2.2 **Lender**. Lender is Urban Funding, Inc., a California corporation. The principal offices of Lender are located at 18201 Von Karman Avenue, Suite 900, Irvine, California 92612.

3. **GRANT**

3.1 **Amount and Purpose**. Subject to the terms and conditions of this Grant Agreement, the Authority hereby agrees to make a grant to Lender in an amount equal to [Seven Million Nine Hundred Thousand Dollars ($7,900,000)] (the “Phase IIB Grant”), to be used for the sole purpose of Lender making the Phase IIB Loan to the Phase IIB Developer. The Lender shall not use the Phase IIB Grant for any other purpose other than providing the Phase IIB Loan to the Phase IIB Developer in accordance with this Grant Agreement and the Phase IIB Loan Documents (as defined below).

3.2 **Conditions to Grant**. The Authority’s obligation to make and disburse the Phase IIB Grant shall be subject to satisfaction of the following conditions precedent:

(a) **Phase IIB Loan ~~Agreement~~ Documents**. Lender, as lender, and the Phase IIB Developer, as borrower, ~~enter~~have entered into a loan agreement, promissory note, deed of trust, and all other necessary documents, each as approved by the Authority (~~including, without limitation, all underlying loan documents~~collectively, the "Phase IIB Loan Documents"), pursuant to which Lender ~~uses~~shall use the Phase IIB Grant ~~proceeds~~ for the purpose of making the Phase IIB Loan on terms and conditions consistent with the Amended DDA ~~(the "Phase IIB Loan~~and this Grant Agreement~~")~~.

(b) **Representations and Warranties**. The representations of Lender contained in this Grant Agreement shall be correct in all material respects as of the making of the Phase IIB Grant as though made on and as of that date. The representations of Phase IIB Developer under the Phase IIB Loan Documents, the Amended DDA, and the Ground Lease shall be correct in all material respects as of the making of the Phase IIB Grant as though made on and as of that date.

(c) **No Default by Lender under this Grant Agreement**. No default by Lender under this Grant Agreement shall then exist, and no event shall then exist which, with the giving of notice or the passage of time or both, would constitute such a default by Lender upon disbursement of the Grant Funds.

(d) **No Default by Phase IIB Developer**. No default by Phase IIB Developer under the Phase IIB Loan Documents, the Amended DDA, or the Ground Lease shall then exist, and no event shall then exist which, with the giving of notice or the passage of time or both, would constitute such a default by Phase IIB Developer under such documents.

(e) **Construction Closing**. The closing of the construction loan, in accordance with the Amended DDA, the Ground Lease, and the loan documents between Phase IIB Institutional Lender and the Phase IIB Developer has occurred.

(f) **Affordable Housing Loan Closing**. The Phase IIB Developer has executed all of the Affordable Housing Loan Documents, as defined in the Third DDA Amendment, and the closing of the Affordable Housing Loan has occurred.

(g) **Building Permit**. The Phase IIB Developer has obtained the building permit for the construction of the Project in accordance with the Amended DDA and the Ground Lease.

(h) **Phase IIB Institutional Lender Agreement**. The Authority and the Phase IIB Institutional Lender have entered into such documents, in such forms as reasonably acceptable to the Authority, that are necessary to evidence that the Phase II Grant proceeds shall be delivered to the Phase IIB Institutional Lender, and that the Phase IIB Institutional Lender shall disburse such funds to the Phase IIB Developer in accordance with the terms and conditions of the Phase IIB Loan Documents. Among other matters, such document(s) shall provide that the Phase IIB Loan shall be disbursed to the Phase IIB Developer for the Affordable Housing Component on a pro-rata basis with the disbursement of the Phase IIB Institutional Lender funds, and any other funds to be utilized for the development of the Project.

(i) **Collateral Assignment Agreement**. The Authority and the Lender have entered into the collateral assignment agreement, substantially in the form attached hereto

as Exhibit B (the "Collateral Assignment Agreement") which provides, among other things, an assignment of Lender's rights under the Phase IIB Loan Documents.

3.3 **Disbursement of Phase IIB Grant**. ~~The Phase IIB Grant shall, subject~~Subject to the terms and conditions of this Grant Agreement~~, be disbursed to Lender concurrent with the closing of the construction loan ("Construction Closing") being made by~~ and the satisfaction of the conditions precedent set forth above (which shall be satisfied either prior to, or concurrently with the disbursement of the Phase IIB Grant), the Phase IIB Grant shall be disbursed to the [Phase IIB Institutional Lender (as defined in Third DDA Amendment)]~~ to~~, and the ~~Phase IIB Developer. The~~ Authority shall instruct the County Treasurer to disburse the ~~Grant Funds in accordance with the terms of this~~Phase IIB Grant to the Phase IIB Institutional Lender. In the event such conditions are not satisfied by _____, 20___, then, notwithstanding any provision herein to the contrary, the Authority shall have no obligation to make the Phase IIB and this Agreement shall automatically terminate without further action of the parties, unless otherwise agreed to by the parties pursuant to an amendment in accordance with Section ~~3.3.~~16F.

4. **GENERAL REPRESENTATIONS, WARRANTIES AND COVENANTS**

4.1 **Lender's Formation, Qualification and Authority**. Lender (a) is validly existing and in good standing under the laws of the State of California, (b) has all requisite authority to conduct its business, and has all requisite authority to execute and perform its obligations under this Grant Agreement.

4.2 **Litigation**. Lender represents and warrants that there are no material actions, lawsuits or proceedings pending or, to the best of Lender's knowledge, threatened against or affecting Lender, the adverse outcome of which could have a material adverse effect on Lender's ability to perform its obligations under this Grant Agreement.

4.3 **Valid Binding Agreements**. This Grant Agreement and all other documents or instruments which have been executed and delivered pursuant to or in connection with this Grant Agreement constitute or, if not yet executed or delivered, will when so executed and delivered constitute, legal, valid and binding obligations of Lender, enforceable against it in accordance with their respective terms.

4.4 **No Breach of Law or Agreement**. Neither the execution nor delivery of this Grant Agreement or of any other documents or instruments executed and delivered, or to be executed or delivered, pursuant to this Grant Agreement, nor the performance of any provision, condition, covenant or other term hereof or thereof, will conflict with or result in a breach of any statute, rule or regulation, or any judgment, decree or order of any court, board, commission or agency whatsoever binding on Lender, or any provision of the organizational documents of Lender, or will conflict with or constitute a breach of or a default under any agreement to which Lender is a party, or will result in the creation or imposition of any lien upon any assets or property of Lender.

5. **INDEPENDENT CONTRACTOR**

Both parties hereto in the performance of this Grant Agreement will be acting in an independent capacity and not as agents, employees, partners or joint venturers with one another. Neither Lender nor Lender's employees are employees of the Authority and are not entitled to any

of the rights, benefits, or privileges of the Authority's employees, including but not limited to retirement, medical, unemployment, or workers' compensation insurance.

6. **CONTROL**

Neither the Authority nor its officers, agents or employees shall have any control over the conduct of Lender or any of Lender's employees except as herein set forth, and Lender expressly agrees not to represent that Lender or Lender's agents, servants, or employees are in any manner agents, servants or employees of the Authority, it being understood that Lender, its agents, servants, and employees are as to the Authority wholly independent contractors and that Lender's obligations to the Authority are solely such as are prescribed by this Grant Agreement.

7. **COMPLIANCE WITH APPLICABLE LAW**

Lender, in the performance of this Grant Agreement, shall comply with all applicable State and Federal statutes and regulations, and all applicable ordinances of the City of Los Angeles, whether now in force or subsequently enacted.

8. **NON-DISCRIMINATION PROVISIONS**

In the performance of this Grant Agreement, Lender shall: (a) not discriminate against any employee or applicant for employment because of age, race, color, ancestry, religion, sex, sexual orientation, marital status, national origin, physical handicap, or medical condition; and (b) take positive action to insure that applicants are employed without regard to their age, race, color, ancestry, religion, sex, sexual orientation, marital status, national origin, physical handicap, or medical condition. Such action shall include but not be limited to the following: employment, upgrading, demotion, transfer, recruitment or recruitment advertising, layoff or termination, rates of pay or other forms of compensation, and selection for training, including apprenticeship.

9. **INDEMNIFICATION AND HOLD HARMLESS**

Lender agrees to defend, indemnify, and hold harmless the Authority, and the Authority's members, and each of their officers, directors, council members, board members, and employees, against and from any and all liability, loss, damages to property, injuries to, or death of any person or persons, and all claims, demands, suits, actions, proceedings, reasonable attorneys' fees, and defense costs, of any kind or nature, including workers' compensation claims, of or by anyone whomsoever, resulting from or arising out of Lender's ~~negligent~~ performance of this Grant Agreement, or any act or omission of Lender or any party acting by, or on behalf of the Lender pursuant to this Grant Agreement, including, but not limited to, the Phase IIB Developer. The requirements of this provision shall survive the expiration or the termination of this Grant Agreement.

10. **LEGAL FEES**

If any party brings a suit or action against the other party arising from any breach of any of the covenants or agreements or any inaccuracies in any of the representations and warranties on the part of the other party arising out of this Grant Agreement, then in that event, the prevailing party in such action or dispute, whether by final judgment or out-of-court settlement, shall be entitled to have and recover of and from the other party all reasonable costs and expenses of suit, including reasonable attorneys' fees.

11. ~~TERMINATION~~**DEFAULT; REMEDIES**

11.1 ~~**Termination of Grant Agreement**. This Grant Agreement may be terminated by the Authority for cause in the event of a material breach of this Grant Agreement and failure by Lender to cure such breach within thirty (30) days after the giving of notice by the Authority. If, however, by its nature the failure cannot reasonably be cured within thirty (30) days, Lender may have such longer period of time as is reasonably necessary to cure the failure, provided, however, that Lender commence said cure within said thirty (30)-day period, and thereafter diligently prosecute said cure to completion.~~Each of the following constitutes a "Default" by Lender under this Grant Agreement:

(a) **Breach of Covenants**. Failure by Lender to duly perform, comply with, or observe any of the conditions, terms, or covenants of this Grant Agreement.

(b) **Breach by Phase IIB Developer of Phase IIB Loan Documents or Phase IIB Institutional Lender documents**. Failure by Phase IIB Developer to duly perform, comply with, or observe any of the conditions, terms, or covenants of the Phase IIB Loan Documents or any of the documents executed by Phase IIB Developer in favor of the Phase IIB Institutional Lender (the "Phase IIB Institutional Lender Documents").

(c) **Breach by Phase IIB Developer of Affordable Housing Loan Documents**. Failure by Phase IIB Developer to duly perform, comply with, or observe any of the conditions, terms, or covenants of the Phase IIB Loan Documents.

(d) **Breach by Phase IIB Developer under Ground Lease or Amended DDA**. Failure by Phase IIB Developer to duly perform, comply with, or observe any of the conditions, terms, or covenants of the Amended DDA or the Ground Lease.

(e) **Insolvency**. A court having jurisdiction has made or entered any decree or order (i) adjudging Lender to be bankrupt or insolvent, (ii) approving as properly filed a petition seeking reorganization of Lender or seeking any arrangement for Lender under the bankruptcy law or any other applicable debtor's relief law or statute of the United States or any state or other jurisdiction, (iii) appointing a receiver, trustee, liquidator, or assignee of Lender in bankruptcy or insolvency or for any of their properties, (iv) directing the winding up or liquidation of Lender, if any such decree or order described in clauses (i) to (iv), inclusive, has continued unstayed or undischarged for a period of ninety (90) days; or (v) Lender has admitted in writing its inability to pay its debts as they fall due or has voluntarily submitted to or filed a petition seeking any decree or order of the nature described in clauses (i) to (iv), inclusive.

(f) **Assignment; Attachment**. Lender has assigned its assets for the benefit of its creditors or suffered a sequestration or attachment of or execution on any substantial part of its property, unless the property so assigned, sequestered, attached or executed upon has been returned or released within ninety (90) days after such event or, if sooner, prior to sale pursuant to such sequestration, attachment, or execution.

(g) **Suspension; Termination**. Lender has voluntarily suspended its business or has been dissolved or terminated.

Notwithstanding the foregoing, the Authority acknowledges that the Phase IIB Developer intends to subdivide the Property prior to, or following, the completion of construction of the

Project, and following such subdivision, the Affordable Housing Component and the Market Rate Component will exist on separate legal parcels. Following such subdivision of the Property in accordance with the Amended DDA and the Ground Lease: (1) a default under the Phase IIB Institutional Lender Documents, the Amended DDA, or Ground Lease (as amended) in connection with the Market Rate Component shall not constitute a default by Lender under this Grant Agreement; and (2) only an event of a default under the Phase IIB Institutional Lender Documents, the Amended DDA, or Ground Lease (as amended) in connection with the Affordable Housing Component shall constitute a default by Lender under this Grant Agreement.

11.2 **Remedies**. Upon an event of Default, the Authority may proceed with any of the following rights and remedies: (i) revoking the Phase IIB Grant, and requiring the full repayment of the Phase IIB Grant by the Lender within ten (10) days following the delivery of a written demand for such repayment, (ii) seeking an action for damages, injunctive relief, or specific performance, (iii) terminating this Grant Agreement, or (iv) any other remedy available at law or equity.

11.3 **Notice of Demand for Repayment or Termination**. Termination with cause, or a notice for the repayment, each as set forth above, shall be effected by delivery of written ~~Notice of Termination~~notice to Lender in accordance with Section ~~13~~12 herein.

12. **NOTICES**

All notices or other communications required or permitted hereunder shall be in writing, and shall be personally delivered; or sent by overnight mail (Federal Express or the like); or sent by registered or certified mail, postage prepaid, return receipt requested; or sent by ordinary mail, postage prepaid; or telegraphed or cabled; or delivered or sent by telex, telecopy, facsimile or fax; and shall be deemed received upon the earlier of (i) if personally delivered, the date of delivery to the address of the person to receive such notice, (ii) if sent by overnight mail, the business day following its deposit in such overnight mail facility, (iii) if mailed by registered, certified or ordinary mail, five (5) days (ten (10) days if the address is outside the State of California) after the date of deposit in a post office, mailbox, mail chute, or other like facility regularly maintained by the United States Postal Service, (iv) if given by telegraph or cable, when delivered to the telegraph company with charges prepaid, or (v) if given by telex, telecopy, facsimile or fax, when sent. Any notice, request, demand, direction or other communication delivered or sent as specified above shall be directed to the following persons:

To the Authority: The Los Angeles Grand Avenue Authority
[_____]
[_____]
Attention: [_____]

To Lender: Urban Funding, Inc.
c/o The Related Companies of California
18201 Von Karman Avenue, Suite 900
Irvine, California 92612
Attention: William A. Witte

Notice of change of address shall be given by written notice in the manner specified in this Section. Rejection or other refusal to accept or the inability to deliver because of changed address of which no notice was given shall be deemed to constitute receipt of the notice, demand, request

or communication sent. Any notice, request, demand, direction or other communication sent by cable, telex, telecopy, facsimile or fax must be confirmed within forty-eight (48) hours by letter mailed or delivered as specified in this Section.

13. **MAINTENANCE OF RECORDS**

Records, in their original form, shall be maintained in accordance with the requirements of the Authority with respect to all matters covered by this Grant Agreement. Such records shall be retained for a period of not less than five (5) years after termination of this Grant Agreement. Such records shall be retained within the Los Angeles area unless authorization to remove them is granted by the Authority.

14. **AUDITS AND INSPECTIONS**

All Lender records with respect to any matters covered by this Grant Agreement shall be made available to the Authority at any time during normal business hours, as often as the Authority deems necessary, to audit, examine and make excerpts or transcripts of all relevant data. Any deficiencies noted in audit reports must be fully cleared by the Lender within thirty (30) days after receipt by the Lender. Failure of the Lender to comply with the above audit requirements will constitute a breach of this Grant Agreement.

15. **TERM; REPAYMENT OF PHASE IIB LOAN**

This Grant Agreement shall remain in effect so long as the Phase IIB Loan Documents are in effect, and upon termination of all of the Phase IIB Loan Documents this Grant Agreement shall terminate (except for any provision that explicitly survives termination). Upon the repayment of all, or any portion, of the Phase IIB Loan to the Lender, the Lender shall promptly, and in no event within ten (10) days after receipt of such funds, deliver such funds to the Authority, or upon written direction of the Authority, to the City for use in conjunction with the development of other affordable housing in downtown Los Angeles.

16. **MISCELLANEOUS PROVISIONS**

A. *Computation of Time Periods.* If any date or time period provided for in this Grant Agreement is or ends on a Saturday, Sunday or federal, state or legal holiday, then such date shall automatically be extended until 5:00 p.m. Pacific Time of the next day which is not a Saturday, Sunday or federal, state or legal holiday.

B. *Counterparts.* This Grant Agreement may be executed in multiple counterparts, each of which shall be deemed an original, but all of which, together, shall constitute but one and the same instrument.

C. *Captions.* Any captions to, or headings of, the sections or subsections of this Grant Agreement are solely for the convenience of the parties hereto, are not a part of this Grant Agreement, and shall not be used for the interpretation or determination of the validity of this Grant Agreement or any provision hereof.

D. *No Obligations to Third Parties.* Except as otherwise expressly provided herein, the execution and delivery of this Grant Agreement shall not be deemed to confer any rights upon, or obligate any of the parties hereto, to any person or entity other than the parties hereto.

E. *Exhibits and Schedules.* The Exhibits and Schedules attached hereto are hereby incorporated herein by this reference for all purposes.

F. *Amendment to this Grant Agreement or the Phase IIB Loan Documents*. The terms of this Grant Agreement may not be modified or amended except by an instrument in writing executed by each of the parties hereto. The terms of any of the Phase IIB Loan Documents may not be modified or amended except by an instrument in writing executed by the Lender and the Phase IIB Developer, in form and substance that has been approved, in writing, by the Authority.

G. *Waiver.* The waiver or failure to enforce any provision of this Grant Agreement shall not operate as a waiver of any future breach of any such provision or any other provision hereof.

H. *Applicable Law.* This Grant Agreement shall be governed by and construed in accordance with the laws of the State of California.

I. *Entire Agreement.* This Grant Agreement supersedes any prior agreements, negotiations and communications, oral or written, and contains the entire agreement between the parties as to the subject matter hereof. No subsequent agreement, representation, or promise made by either party hereto, or by or to an employee, officer, agent or representative of any party hereto shall be of any effect unless it is in writing and executed by the party to be bound thereby.

J. *Successors and Assigns.* This Grant Agreement shall be binding upon and shall inure to the benefit of the successors and assigns of the parties hereto; provided, however, in no event shall Lender assign or otherwise transfer its rights, duties, and obligations under this Grant Agreement without the prior written consent of the Authority.

K. *Construction.* The parties acknowledge and agree that (i) each party is of equal bargaining strength, (ii) each party has actively participated in the drafting, preparation and negotiation of this Grant Agreement, (iii) each such party has consulted with or has had the opportunity to consult with its own, independent counsel and such other professional advisors as such party has deemed appropriate, relative to any and all matters contemplated under this Grant Agreement, (iv) each party and such party's counsel and advisors have reviewed this Grant Agreement, (v) each party has agreed to enter into this Grant Agreement following such review and the rendering of such advice, and (vi) any rule or construction to the effect that ambiguities are to be resolved against the drafting party shall not apply in the interpretation of this Grant Agreement, or any portions hereof, or any amendments hereto.

IN WITNESS WHEREOF, the parties hereto have executed this Grant Agreement on the date and year first above written.

Lender:

URBAN FUNDING, INC., a California corporation

By: _____
William A. Witte
President

Authority:

THE LOS ANGELES GRAND AVENUE AUTHORITY, a California joint powers authority

By: _____
Name: _____
Title: _____

APPROVED AS TO FORM:

Carmen A. Trutanich
City Attorney

By: _____
Name: _____
Title: _____

Andrea Sheridan Ordin
County Counsel

By: _____
Name: _____
Title: _____

[signatures continue on following page]

The undersigned hereby approves, authorizes and consents to the terms of this Grant Agreement, and agrees to comply with all provisions herein, including, without limitation, the terms of Section 3.3.

[COUNTY TREASURER]

By: _____
Name: _____
Title: _____

EXHIBIT A

LEGAL DESCRIPTION

(Attachment)

EXHIBIT B

FORM OF COLLATERAL ASSIGNMENT AGREEMENT

OFFICIAL BUSINESS

Document entitled to free
recording per Government
Code Section 27383

Recording Requested by and When
Recorded Return to:

Los Angeles Grand Avenue Authority
c/o County of Los Angeles
Chief Executive Office
500 West Temple Street
Los Angeles, CA 90012
Attn: Chief Administrative Officer

SPACE ABOVE THIS LINE FOR RECORDER'S USE

AGREEMENT CONTAINING COVENANTS AFFECTING REAL PROPERTY

(INCLUDING RENTAL RESTRICTIONS)

(Grand Avenue-Phase IIB)

TABLE OF CONTENTS

Page

1. Definitions. 1

2. Agreement Regarding Use of Property. 4

3. No Discrimination. 9

4. Required Nondiscrimination Clauses. 9

5. Barriers to the Disabled. 10

6. Maintenance. 12

7. Property Management. 12

8. Occupancy Standards. 16

9. Covenants Run with the Land; Enforceable by Authority, City and Tenants. 17

10. Rights of Third Parties. 17

11. Enforcement Rights. 17

12. Restrictions on Transfer. 18

13. Rights of Lenders; Subordination. 18

14. Term of this Agreement. 18

15. Notice and Opportunity to Cure. 18

16. Remedies. 19

17. Non-Liability of Officials, Employees and Agents. 19

18. Indemnity. 19

19. Approvals. 20

20. Construction and Interpretation of Agreement. 20

21. Relationship of the Parties. 21

22. Compliance with Law. 22

TABLE OF CONTENTS

Page

23. Binding Effect. 22

24. Notices. 22

25. Counterparts. 23

26. Partial Release of this Agreement. 23

AGREEMENT CONTAINING COVENANTS AFFECTING REAL PROPERTY
(INCLUDING RENTAL RESTRICTIONS)
(Grand Avenue-Phase IIB)

THIS AGREEMENT is entered into as of _____, 20__ by and between GRAND AVENUE M HOUSING PARTNERS, LLC, a California limited liability company ("Owner"), and THE LOS ANGELES GRAND AVENUE AUTHORITY, a California joint powers authority ("Authority").

RECITALS:

A. Owner has a long-term leasehold interest in that certain real property (the "Property") located in the City of Los Angeles, County of Los Angeles, State of California, legally described in the "Legal Description" attached hereto and incorporated herein as Attachment No. 1.

B. The Property is within the Bunker Hill Redevelopment Project area (the "Project Area") and is subject to the provisions of the Redevelopment Plan for the Project Area adopted by the City Council of the City of Los Angeles, as amended.

C. The Authority and Owner have entered into that certain Loan Agreement, dated _____, 2012 (the "Loan Agreement") which is incorporated herein by this reference.

D. Pursuant to the Loan Agreement, the Authority has agreed to make a loan to Owner to provide part of the financing for the acquisition of the Property and construction of certain improvements thereon (the "Improvements").

E. This Agreement is entered into and recorded in accordance with the Redevelopment Plan and the Loan Agreement. Any capitalized term not otherwise defined herein shall have the meaning ascribed to such term in the Loan Agreement.

NOW, THEREFORE, THE AUTHORITY AND OWNER AGREE AS FOLLOWS:

1. Definitions.

The following terms have the meaning and content set forth in this section wherever used in this Agreement or the attached Attachments:

"Affordable Rent" shall mean monthly rent, including a reasonable utility allowance, that does not exceed the following respective amounts (which, as of the date hereof, are more particularly set forth in Attachment No.2):

(a) for a Forty Percent Income Household, one-twelfth of the product of thirty percent (30%) times forty percent (40%) of the Area Median Income adjusted for

family size appropriate for the unit, as determined in accordance with the TCAC Regulations, subject to subsection (c), below;

(b) for a Very Low Income Household, one-twelfth of the product of thirty percent (30%) times fifty percent (50%) of the Area Median Income adjusted for family size appropriate for the unit, as determined in accordance with the TCAC Regulations, subject to subsection (c), below; and

(c) notwithstanding the foregoing, in no event shall rent exceed thirty (30%) percent times one hundred ten percent (110%) of the Area Median Income adjusted for family size appropriate for the unit, as set forth in California Health and Safety Code Section 50053(b) (which, as of the date hereof, is more particularly set forth in Attachment No.2).

“Affordable Unit” shall mean any of the fifty-six (56) dwelling units in the Improvements on the Property (other than the manager's unit) required by this Agreement to be rented exclusively to and occupied by Eligible Households.

“Area Median Income” shall have the meaning set forth in California Health and Safety Code Section 50093, as amended from time-to-time, as it may be amended from time to time, or, to the extent applicable, area median income as determined in accordance with the TCAC Regulations (as the context may require).

"Authority" shall mean The Los Angeles Grand Avenue Authority, a California joint powers authority.

"Authority Designated Representative" shall mean the person or person(s) designated in writing by the Authority to act on behalf of the Authority in connection with providing approvals or consents under this Agreement. The Authority is under no obligation to designate an Authority Designated Representative.

"City" shall mean the City of Los Angeles, California, a municipal corporation, operating through its governing body, the City Council, and its various departments.

“Eligible Household” shall mean, as applicable to this Agreement, a household that qualifies as a Forty Percent Income Household, or a Very Low Income Household, as described in Section 2.(b), below.

"Forty Percent Income Household" shall mean a household whose income does not exceed forty percent (40%) of Area Median Income.

“HCD” shall mean the California Department of Housing and Community Development.

"Improvements" shall mean and include all buildings, structures, fixtures, excavation, parking, landscaping, and other improvements of whatsoever character, located on, around, under or over the Property.

“Low Income Housing Tax Credit” shall mean the tax credit authorized by the Tax Reform Act of 1986 and governed by Section 42 of the Internal Revenue Code.

"Official Records" shall mean the official records of the County of Los Angeles, California.

"Owner" shall mean Grand Avenue M Housing Partners, LLC, a California limited liability company, and its permitted successors or assigns.

"Owner Agreement" shall mean the Owner's operating agreement, or limited partnership agreement, as the case may be, as amended from time to time in accordance with this Agreement and the Loan Agreement.

"Ownership or Control" shall mean, without limitation, any voting rights and any beneficial ownership with respect to all classes of stock, interests in partnerships and/or limited liability companies, and/or beneficial interests under a trust, as may be applicable to the type of entity in question. In the case of a trust, such term shall also include the rights of the trustee as well as the beneficiary.

“Parties" shall mean the Authority and the Owner, collectively, and "Party" shall mean either the Authority or the Owner.

"Property" means the real property more particularly described in Exhibit A.

“Tax Credit Equity Investor” shall mean any Person who will be an investor member or partner in Owner, as the case may be, and who will purchase the Low Income Housing Tax Credit and own at least a 99% interest in Owner.

"TCAC" shall mean the California Tax Credit Allocation Committee.

"TCAC Regulations" shall mean the rules and regulations of TCAC, as may be amended from time to time.

“Tenant” shall mean, at any time of determination thereof, all persons who together occupy a single residential unit in the Project, and upon the occupancy of a unit by any individual in addition to the previous Tenant of such unit, such unit shall be deemed to be occupied by a new Tenant.

“Term of this Agreement” shall the mean the time period during which this Agreement shall be in effect, which shall commence on the date this Agreement is recorded in the Official Records, and shall terminate fifty-five (55) years from the latest

of the following to occur: (a) the date of this Agreement is recorded in the Official Records; (b) the issuance by the City of Los Angeles of the certificate of occupancy for the Improvements (the “Occupancy Date”), if any; or (c) the recordation of the Certificate of Completion pursuant to Section 5.4 of the Loan Agreement.

"Transfer" has the meaning set forth in the Loan Agreement.

“Verification of Income” shall mean a Verification of Income in the Tenant Certification Form attached to this Agreement as Attachment No. 3, or in such other comparable form which the Owner or its agent may find more convenient and consistent with its administrative procedures as may be approved from time to time by the Authority.

“Very Low Income Households” shall have the meaning set forth therefor in California Health and Safety Code Section 50105, as it may be amended from time-to-time.

2. Agreement Regarding Use of Property.

Owner, on behalf of itself and its successors, assigns, and each successor in interest to Owner's interest in the Property or any part thereof, hereby covenants and agrees to use the Property during the Term of this Agreement only for the uses permitted in the Loan Agreement and this Agreement, specifically including the following:

(a) Development and Use. The Property shall be developed and used for multi-family residential rental uses, consisting of fifty-six (56) dwelling units (including one manager's unit), which shall include thirteen (13) two-bedroom units, twenty-eight (28) one-bedroom units and fifteen (15) studio units (the “Units”), with landscaping and related amenities, all as described in the Scope of Development attached to the Loan Agreement. With the exception of one (1) two-bedroom Unit which may be used as a manager’s Unit, all of the Units (the “Affordable Units”) shall be rented at an Affordable Rent to Eligible Households (as set forth in paragraph (b) of this Section, below), in accordance with this Agreement. All Affordable Units shall be leased, occupied and not withdrawn from the market. Owner shall not convert the Affordable Units to condominium or cooperative ownership or sell condominium or cooperative conversion rights to the Affordable Units during the term of this Agreement.

(b) Income Restrictions. All of the Affordable Units shall be rented to and occupied exclusively by Eligible Households. For purposes of this Agreement, the income of a household shall be determined at initial occupancy of a Unit by that household. Owner shall determine the income eligibility of each tenant household pursuant to the Authority's approved tenant certification procedures within ninety (90) calendar days of the household's expected occupancy of one of the Affordable Units. Owner shall certify each tenant household's income on an annual basis. The Affordable Units shall be allocated among income groups as follows:

i. Nine (9) Affordable Units shall at all times be occupied or held vacant and available for rental by Forty Percent Income Households whose incomes do not exceed forty percent (40%) of the Area Median Income as determined in accordance with the TCAC Regulations. Income determinations shall be made at the time of initial occupancy of a unit by a tenant. Of these nine (9) Forty Percent Income Units, three (3) are studios, five (5) are one-bedrooms, and one (1) is two-bedrooms;

ii. Forty-Six (46) Affordable Units shall at all times be occupied or held vacant and available for rental by Very Low Income Households whose incomes do not exceed fifty percent (50%) of the Area Median Income as determined in accordance with the TCAC Regulations. Income determinations shall be made at the time of initial occupancy of a unit by a tenant. Of these forty-six (46) Very Low Income Units, twelve (12) are studios, twenty-three (23) are one-bedrooms, and eleven (11) are two-bedrooms.

The Affordable Rent applicable to the Affordable Units by Unit-types shall be as determined by in accordance with the Maximum Rents and Occupancy Income Limits for New Projects attached to this Agreement as Attachment No. 2; provided, however, notwithstanding the foregoing, or any other provision of this Agreement, in no event shall rent exceed thirty (30%) percent times one hundred ten percent (110%) of the Area Median Income adjusted for family size appropriate for the unit, as set forth in California Health and Safety Code Section 50053(b) (which, as of the date hereof, is more particularly set forth in Attachment No.2). The maximum incomes of residential tenants eligible to rent the Affordable Units shall be determined on the basis of the Area Median Income. Owner shall verify that occupants are within these established income limits. Upon initial lease-up and from time-to-time thereafter, at the request of Owner, the Authority shall provide Owner with an updated Attachment No. 2 (Schedule of Maximum Rents and Occupancy Income Limits).

(c) Rent Restrictions. Owner shall not charge rents, including a reasonable utility allowance as determined by the Housing Authority of the City of Los Angeles for the Section 8 Rental Assistance Program, in excess of the respective Affordable Rents, as set forth in Attachment No. 2, adjusted by the percent change in the Area Median Income. Owner may increase rents for the Affordable Units not more than annually, subject to any applicable rent control ordinance then in effect, but in no event shall Owner charge rents in excess of an “Affordable Rent” for the Unit in question. The Authority acknowledges that Owner intends to enter into an extended use agreement with TCAC, and in accordance with this Agreement, except as permitted under IRC Section 42, for a period of three (3) years following foreclosure, a preexisting low-income tenant cannot be evicted (other than for good cause) nor have their rent increased.

(d) Priorities. Owner agrees that among Eligible Households who are otherwise eligible to rent the Affordable Units to be developed pursuant to the Agreement, those persons who have been displaced by any redevelopment project within the City of Los Angeles shall be given first priority over other eligible persons.

After displaces, the households in any one or more of the following categories shall be given priority in the selection for occupancy of the Affordable Units: (i) those paying more than fifty percent (50%) of their income for housing; (ii) those living in overcrowded or seriously substandard conditions, especially housing which has been cited by the City for health and safety code violations; and (iii) homeless households. Thereafter, occupancy shall be provided as set forth in an affirmative marketing plan ("Affirmative Marketing Plan") required for the Affordable Units. Owner agrees that prior to the initial lease-up of the Affordable Units, Owner shall consult with and obtain the approval of the Authority in developing an Affirmative Marketing Plan for renting the Affordable Units, in accordance with the Affirmative Marketing Requirements attached to this Agreement as Attachment No. 4. Owner and the Authority shall cooperate to effectuate this subsection 2(d) prior to the initial renting, and upon occurrence of any vacancy and the re-renting of any Affordable Units. Owner shall accept any proposed tenant entitled to preference pursuant to this subsection who meets Owner's then current tenant selection criteria. If a person referred to Owner by the Authority is rejected for tenancy, Owner shall specify in writing to the Authority which of the selection criteria the tenant failed to meet. During the initial lease-up and from time to time thereafter, the Authority shall provide to Owner a list of such persons entitled to priority.

(e) Monitoring; Reporting and Enforcement. The Authority and its successors and assigns shall have the right to monitor and enforce the covenants contained in this Agreement. Owner hereby represents, warrants and covenants that it shall comply with any monitoring program set up by the Authority to enforce said covenants. In complying with such monitoring program, Owner or its agent shall prepare and submit to the Authority for each Affordable Unit, annually, not later than fifteen (15) calendar days after the anniversary date of this Agreement, until the end of the Term of this Agreement, an occupancy summary report in such form as may be required by the Authority, showing the present occupants; rent; unit type; household size; income at the time of initial occupancy; income certification information; move-in date; and, if applicable, move-out date. To the extent not otherwise included in such occupancy summary report, Owner shall also submit the information required by California Health and Safety Code Section 33418, including an occupancy report, financial information and income verification documents for each Tenant of an Affordable Unit, and all supporting documentation.

i. No Tenant qualifying for an Affordable Unit upon initial occupancy shall be denied continued occupancy of a unit in the Project because, after admission, such tenant's Annual Income increases to exceed the qualifying limit. However, should a Tenant's Annual Income, as of the most recent determination thereof, exceed the income limit for an Affordable Unit of the same family size, the Tenant may be charged an affordable rent established at a level not to exceed 30% of the annual gross income of the household.

ii. The Owner shall obtain, complete and maintain on file a certification of income for each Tenant of an Affordable Unit ("Income Certification") including (a) an Income Certification dated immediately prior to the initial occupancy of

such Assisted Unit in the Project, and (b) thereafter, an annual Income Certification with respect to each Affordable Unit Tenant, within thirty (30) calendar days before or after the anniversary of such Tenant's initial occupancy of a Unit in the Project. The Owner shall provide such additional information as may be required from time to time by the State of California, HCD, State law, or other municipal, state, or federal programs as the same may be amended from time to time, or in such other form and manner as may be required by applicable rules, rulings, policies, procedures or regulations now or hereafter promulgated, proposed or made applicable to the Project. The Owner shall make a good faith effort to verify that the income information provided by an applicant in any Income Certification is accurate by taking one or more of the following steps as a part of the verification process: (1) obtain a pay stub for the most recent pay period, (2) obtain an income tax return transcript for the most recent tax year, (3) obtain a credit report or conduct a similar type credit search (4) obtain an income verification from the applicant's current employer, (5) obtain an income verification from the Social Security Administration and/or the California Department of Social Services if the applicant receives assistance from either of such agencies, or (6) if the applicant is unemployed and does not have an income tax return, obtain another form of independent verification reasonably acceptable.

iii. The Owner shall prepare and submit to the Authority, annually not later than July 15th, beginning after the first anniversary of this Agreement, until the end of the Term of this Agreement, a Certificate of Continuing Program Compliance in the form attached to this Agreement as Attachment No. 8, executed by the Owner. The Owner shall pay to the Authority its annual monitoring fee, if any, for the Authority's administration of these reporting requirements.

iv. For the Term of this Agreement, all Tenant leases or rental agreements shall be subordinate to this Agreement and the Authority Loan Deed of Trust. All leases pertaining to Affordable Units shall contain clauses, among others wherein each Tenant who occupies an Affordable Unit: (1) certifies the accuracy of the statements made in the Verification of Income; (2) agrees that the family income and other eligibility requirements shall be deemed substantial and material obligations of the tenancy of such Tenant, that such Tenant shall comply promptly with all requests for information with respect thereto from the Owner, or the Authority, and that the failure to provide accurate information in the Verification of Income or refusal to comply with a request for information with respect thereto shall be deemed a violation of a substantial obligation of the tenancy of such Tenant; (3) acknowledges that the Owner has relied on the Verification of Income and supporting information supplied by the Affordable Unit Tenant in determining qualification for occupancy of the Affordable Unit, and that any material misstatement in such certification (whether or not intentional) shall be cause for immediate termination of such lease or rental agreement; and (4) agrees that the Tenant's income is subject to annual certification in accordance with subsection 7.(i) of this Agreement and that if upon any such certification such tenant's annual household income exceeds the applicable income limit under Section 2 of this Agreement, such Tenant may be charged an affordable rent established at a level not to exceed 30% of the annual gross income of the household.

(f) Prohibition against renting to persons with a relationship to Owner. Except for resident managers occupying the manager's Unit, no person having any Ownership or Control of Owner or any of Owner's partners or members, and no officer, employee, agent, official or consultant of Owner or anyone having any Ownership or Control of Owner or any of Owner's partners or members, or any family member of anyone having any Ownership or Control of Owner or any of Owner's partners or members, may occupy any of the Affordable Units.

(g) Inspection of Books and Records and of the Property. Owner shall maintain records which clearly document Owner's performance of its obligations pursuant to this Agreement. Owner shall submit any records to the Authority within ten (10) Business Days of written request. Owner shall permit representatives of the Authority to enter and inspect the Property upon 24 hours' advance notice to Owner or the Management Agent, or such other notice as may be required by law. Owner's leases or rental agreements with tenants of the Affordable Units shall also provide for entry into the Affordable Units for periodic health and safety inspections. The Authority has the right at all reasonable times, and upon three (3) Business Days' prior notice, to inspect the books and records of the Owner pertaining to the Property and/or Project as pertinent to the purposes of this Agreement and to make such books and records available to other governmental agencies as may be necessary or appropriate for determinations of compliance. Owner shall maintain copies of such books and records in a location that is within fifty (50) miles of the Property. The Authority's right to inspect the Owner's books and records shall be limited only to such records as may be necessary to determine Owner's compliance with the terms and conditions of this Agreement.

(h) Sustainability. Owner acknowledges that the Scope of Development attached to the Loan Agreement requires Owner to incorporate features and systems in the Project that shall address issues of sustainability in design and development. In consideration of the Loan Agreement, Owner hereby covenants and agrees to: (1) monitor building operations and maintain the building and building systems in proper working order and in compliance with manufacturers' maintenance requirements to ensure continuous, efficient operation within design specifications; and (2) provide building system technical manuals and best practices literature to property managers and building occupants, as appropriate, to facilitate maximum operational efficiencies and best practices that support energy and water conservation, healthful indoor air quality, and waste reduction and recycling. Monitoring and operations status shall be reported to the Authority as reasonably requested.

(i) Use of Property for Commercial Advertising. Owner shall not, without prior written approval of the Authority, which approval Authority may grant, deny or condition in its sole and absolute discretion, allow or permit any billboards, supergraphics or other similar forms of commercial advertising to be placed on the Property, not including signs used by Owner in the operation of affordable housing on the Property.

(j) Maintenance, Operation and Management of Property. Owner shall maintain, operate and manage the Property in accordance with this Agreement for the Term of this Agreement.

3. No Discrimination.

(a) Owner covenants and agrees for itself, its successors and its assigns in interest to the Property or any part thereof, that there shall be no discrimination against or segregation of any person or persons on any basis listed in subdivision (a) or (d) of Section 12955 of the Government Code, as those bases are defined in Sections 12926, 12926.1, subdivision (m) and paragraph (1) of subdivision (p) of Section 12955, and Section 12955.2 of the Government Code. All deeds, leases, or contracts for the sale, lease, sublease, or other transfer of the Property shall contain or be subject to the nondiscrimination or non-segregation clauses hereafter prescribed.

(b) Notwithstanding subdivision 3(a), above, with respect to familial status, subdivision (a) shall not be construed to apply to housing for older persons, as defined in Section 12955.9 of the Government Code. With respect to familial status, nothing in subdivision (a) shall be construed to affect Sections 51.2, 51.3, 51.4, 51.10, 51.11, and 799.5 of the Civil Code, relating to housing for senior citizens. Subdivision (d) of Section 51 and Section 1360 of the Civil Code and subdivisions (n), (o), and (p) of Section 12955 of the Government Code shall apply to subdivision (a).

4. Required Nondiscrimination Clauses.

Owner shall refrain from restricting the rental, sale or lease of the Property as provided in Section 3, above. All deeds, leases or contracts for the sale, lease, sublease, or other transfer of the Property entered into after the date on which this Agreement is executed by the Authority shall contain or be subject to substantially the following nondiscrimination or non-segregation clauses:

(a)

i. In deeds the following language shall appear--"The grantee herein covenants by and for himself or herself, his or her heirs, executors, administrators, and assigns, and all persons claiming under or through them, that there shall be no discrimination against or segregation of, any person or group of persons on account of any basis listed in subdivision (a) or (d) of Section 12955 of the Government Code, as those bases are defined in Sections 12926, 12926.1, subdivision (m) and paragraph (1) of subdivision (p) of Section 12955, and Section 12955.2 of the Government Code, in the sale, lease, sublease, transfer, use, occupancy, tenure, or enjoyment of the premises herein conveyed, nor shall the grantee or any person claiming under or through him or her, establish or permit any practice or practices of discrimination or segregation with reference to the selection, location, number, use or occupancy of tenants, lessees, subtenants, sub-lessees, or vendees in the premises herein conveyed. The foregoing covenants shall run with the land."

ii. Notwithstanding paragraph (a)(1), with respect to familial status, paragraph (1) shall not be construed to apply to housing for older persons, as defined in Section 12955.9 of the Government Code. With respect to familial status, nothing in paragraph (1) shall be construed to affect Sections 51.2, 51.3, 51.4, 51.10, 51.11, and 799.5 of the Civil Code, relating to housing for senior citizens. Subdivision (d) of Section 51 and Section 1360 of the Civil Code and subdivisions (n), (o), and (p) of Section 12955 of the Government Code shall apply to paragraph (a)(1).

(b)

i. In leases the following language shall appear--"The lessee herein covenants by and for himself or herself, his or her heirs, executors, administrators, and assigns, and all persons claiming under or through him or her, and this lease is made and accepted upon and subject to the following conditions: That there shall be no discrimination against or segregation of any person or group of persons, on account of any basis listed in subdivision (a) or (d) of Section 12955 of the Government Code, as those bases are defined in Sections 12926, 12926.1, subdivision (m) and paragraph (1) of subdivision (p) of Section 12955, and Section 12955.2 of the Government Code, in the leasing, subleasing, transferring, use, occupancy, tenure, or enjoyment of the premises herein leased nor shall the lessee himself or herself, or any person claiming under or through him or her, establish or permit any such practice or practices of discrimination or segregation with reference to the selection, location, number, use, or occupancy, of tenants, lessees, sub-lessees, subtenants, or vendees in the premises herein leased."

ii. Notwithstanding paragraph (1), with respect to familial status, paragraph (1) shall not be construed to apply to housing for older persons, as defined in Section 12955.9 of the Government Code. With respect to familial status, nothing in paragraph (1) shall be construed to affect Sections 51.2, 51.3, 51.4, 51.10, 51.11, and 799.5 of the Civil Code, relating to housing for senior citizens. Subdivision (d) of Section 51 and Section 1360 of the Civil Code and subdivisions (n), (o), and (p) of Section 12955 of the Government Code shall apply to paragraph (1).

(c) In contracts entered into by the Authority relating to the sale, transfer, or leasing of land or any interest therein acquired by the Authority within any survey area or redevelopment project the foregoing provisions in substantially the forms set forth shall be included and the contracts shall further provide that the foregoing provisions shall be binding upon and shall obligate the contracting Party or parties and any subcontracting Party or parties, or other transferees under the instrument.

5. Barriers to the Disabled.

(a) <u>Compliance with all Accessibility Requirements</u>. Owner shall comply with all applicable requirements of state, local and federal rules, laws and regulations relating to accessibility and reasonable accommodations for persons with disabilities, including, without limitation, the following to the extent any are applicable to the Project:

Section 504 of the Rehabilitation Act of 1973 (29 U.S.C. Section 794 and implementing regulations at 24 CFR Part 8); the Americans with Disabilities Act (42 U.S.C. Sections 12131 *et seq*. and 12181 *et seq*., and implementing regulations at 28 CFR Parts 35 and 36); the Fair Housing Act (42 U.S.C. Section 3601 *et seq.*, and implementing regulations at 24 CFR Part 100); the Fair Employment and Housing Act (California Government Code Section 12926); and Title 24 of the California Building Code. Without limiting the generality of the foregoing,

i. residential and nonresidential projects that involve new construction or rehabilitation of existing buildings and that are financed in whole or in part with federal funds (e.g. CDBG, HOME) shall comply with all applicable requirements of Section 504 of the Rehabilitation Act of 1973 and all other applicable requirements;

ii. projects that receive Authority or other nonfederal sources of funding shall comply with all applicable requirements of the Americans with Disabilities Act, the Fair Housing Act, the Fair Employment and Housing Act, Title 24 of the California Building Code, and all other applicable requirements;

iii. commercial structures, and common areas and public use areas in residential projects, shall comply with all applicable requirements of the Americans with Disabilities Act, Title 24 of the California Building Code and all other applicable requirements.

Owner shall ensure that construction plans submitted for review by the Authority comply with all applicable requirements of law and that Project construction is carried out in conformity with approved plans.

(b) ADA Certification. Owner hereby certifies as follows:

i. Owner is in compliance with and shall continue to comply with the Americans with Disabilities Act, 42 U.S.C. 12101 et seq. and its implementing regulations.

ii. Owner shall provide for reasonable accommodations to allow qualified individuals with disabilities to have access to and participate in its programs, services and activities in accordance with the provisions of the Americans with Disabilities Act.

iii. Owner shall not discriminate against persons with disabilities nor against persons due to their relationship or association with a person with a disability.

iv. (iv) Owner shall require that the language of this Section 5 be included in the award documents for all sub-awards at all tiers (including subcontracts, and contracts under grants, loans and cooperative agreements) and that all subcontractors shall certify and disclose accordingly.

The certification set forth in this Section is a material representation of fact upon which reliance was placed when the Parties entered into this transaction.

6. Maintenance.

(a) Owner, its successors and assigns, shall maintain the Improvements on the Property (including all buildings, public spaces, walkways, driveways, parking areas and landscaping), in a decent, safe, sanitary and habitable condition and in good repair and working order, which shall be at least the same (or better) aesthetic condition as the condition of the Property at the time Authority issues a Certificate of Completion pursuant to the Loan Agreement, reasonable wear and tear excepted. This standard for the quality of maintenance of the Property shall be met whether or not a specific item of maintenance is listed below. However, representative items of maintenance shall include frequent and regular inspection for graffiti or damage or deterioration or failure, and immediate repainting or repair or replacement of all surfaces, fencing, walls, equipment, etc., as necessary; emptying of trash receptacles and removal of litter; sweeping of public sidewalks adjacent to the Property, on-site walks and paved areas and washing-down as necessary to maintain clean surfaces; maintenance of all landscaping in a healthy and attractive condition, including trimming, fertilizing and replacing vegetation as necessary; cleaning windows on a regular basis; painting the buildings on a regular program and prior to the deterioration of the painted surfaces; conducting a roof inspection on a regular basis and maintaining the roof in a leak-free and weather-tight condition; maintaining security devices in good working order.

(b) From time to time, Owner shall make all necessary and proper repairs, renewals, and replacements. In the event Owner, its successors or assigns fails to maintain the Improvements in accordance with the standard for the quality of maintenance, Authority or its designee shall have the right but not the obligation to enter the Property upon reasonable notice to Owner, correct any violation, and hold Owner, or such successors or assigns responsible for the cost thereof, and such cost, until paid, shall constitute a lien on the Property. In addition, Owner shall not commit or permit waste on or to the Property, and shall prevent and/or rectify any physical deterioration of the Property; Owner shall provide adequate ongoing security equipment or services for tenants of the Affordable Units. Owner shall maintain the Property in conformance with all applicable federal, state and local laws, ordinances, codes and regulations, and the Management Plan required by this Agreement.

7. Property Management.

Not later than ninety (90) calendar days prior to completion of construction of the Improvements, Owner shall submit to the Authority for approval or disapproval a plan for marketing and managing the Affordable Units (the “Property Management Plan”), as provided in the Property Management Plan Outline attached to this Agreement as Attachment No. 6. Thereafter, Owner, its successors and assigns, shall manage the Affordable Units in accordance with the Property Management Plan approved by Authority Designated Representative or designee. The Property Management Plan,

including such amendments as may be approved in writing by the Authority Designated Representative or designee, shall remain in effect for the term of this Agreement. The Property Management Plan shall contain the following components:

(a) Management Agent. Owner shall be responsible for the operation of the Improvements either by direct management or by contracting its managerial functions to a third Party property manager or agent (the "Management Agent") which Management Agent shall be charged with managing the Improvements on behalf of the Owner. The Authority shall have the right, but not the obligation, to review and approve or disapprove the name and qualifications of the Management Agent. Such approval shall not be unreasonably withheld. Authority shall have no responsibility for the management of the Property. Related Management Company, L.P., a New York limited partnership is hereby approved as the Management Agent.

(b) Affirmative Marketing Plan. Owner shall prepare and submit to Authority for approval, and maintain in effect, a plan ("Affirmative Marketing Plan") for attracting to the Affordable Units tenants from those ethnic and racial groups least likely to reside in the Affordable Units in the absence of outreach efforts and providing a method to insure a fair method of selecting tenants. The Affirmative Marketing Plan shall be prepared and implemented in accordance with the requirements set forth in the Affirmative Marketing Requirements attached to this Agreement as Attachment No. 4. Owner shall be responsible for implementing the approved Affirmative Marketing Plan at initial marketing of the Affordable Units and upon any vacancy.

(c) Property Management Plan. Owner or its Management Agent shall prepare a Property Management Plan substantially in the form attached to this Agreement as Attachment No. 6, which shall describe the proposed management, maintenance, tenant selection and occupancy policies and procedures for the Affordable Units. Such policies and procedures shall be consistent with this Agreement.

(d) Management Agreement. Owner shall submit a copy of the proposed property management agreement specifying the amount of the management fee and the relationship and division of responsibilities between Owner and the Management Agent. Owner shall change management practices or replace its Management Agent if Authority gives Owner notice that the Affordable Units are not being managed in accordance with this Agreement or if the Management Agent violates any federal, state or local health and safety laws and regulations which are not cured within thirty (30) days following the giving of notice of such violations by the Authority or any other governmental entity; provided, however, that in the case of a violation that cannot be cured within such thirty (30) day period, that such cure shall be commenced within thirty (30) days of notification and shall be diligently prosecuted to completion. The property management agreement shall provide that it is subject to termination by Owner, without penalty, upon thirty (30) days prior written notice, at the direction of Authority. Within thirty (30) days following direction from Authority to replace the Management Agent, Owner shall select another management agent or make other arrangement satisfactory to Authority for continuing management of the Affordable Units.

(e) Tenant Lease or Rental Agreement and Rent Collection. Owner shall submit to Authority a copy of the proposed Tenant lease or rental agreement to be used in renting the Affordable Units before leasing any Affordable Unit. The term of the residential lease shall be for no less than one (1) year unless mutually agreed upon by Owner and Tenant. Authority shall have the right but not the obligation to review and approve or disapprove the Tenant lease or rental agreement. Owner shall submit to Authority its proposed plans for the collection of Tenant rents as outlined in the Property Management Plan. An addendum in the form attached to this Agreement as Attachment No. 7 shall be attached to and become part of each Affordable Unit Tenant lease or rental agreement.

(f) Annual Budget. Annually, not later than ninety (90) calendar days prior to the beginning of each fiscal year, Owner shall submit a projected operating budget to Authority. The budget shall be in a form that is reasonably acceptable to Authority.

(g) Tenant Selection. Before leasing the Affordable Units, Owner shall provide to Authority for its approval or disapproval Owner's written tenant selection plan, which, subject to the priorities set forth in Section 2(d) of this Agreement, shall provide for the selection of tenants from a written waiting list in the chronological order of their application, insofar as it is practicable. Any selection criteria shall be consistent with the purpose of providing housing for persons and families of low and moderate income and shall be reasonably related to program eligibility and the applicant's ability to perform the obligations of the lease. Owner shall give prompt written notification to any rejected applicant of the grounds for any rejection. Owner shall not apply selection criteria which discriminate in the rental of Affordable Units among Eligible Households applying for tenancy who otherwise qualify for occupancy, for the sole reason that the income of such applicant is lower than the income of another eligible applicant. Owner shall accept as Tenants, on the same basis as all other prospective Tenants, persons who are recipients of federal certificates or vouchers for rent subsidies pursuant to the existing program under Section 8 of the Federal Housing Act. Owner shall not permit any selection criteria to be applied to Section 8 certificate or voucher holders that are more burdensome than the criteria applied to all other prospective Tenants.

(h) Tenant Eligibility Review. Not later than ten (10) Business Days prior to the tenant's expected date of occupancy of an Affordable Unit, Owner shall determine the income eligibility of each tenant household pursuant to Authority's approved tenant certification procedures. Owner shall obtain, complete and maintain on file immediately prior to initial occupancy and annually thereafter, income certifications from each Tenant renting any of the Affordable Units. The Owner agrees to submit to Authority Annual Income Certifications. The Owner shall make a good faith effort to verify that the income provided by an applicant or Tenant in an income certification is accurate by taking one or more of the following steps as a part of the verification process: (1) obtain pay stubs for the most recent pay periods; (2) obtain an income tax return for the most recent tax year; (3) conduct a credit agency or similar search; (4) obtain an income verification form from the applicant's current employer; (5) obtain an income verification form from the Social Security Administration and/or the California Department of Social Services if

the applicant receives assistance from either of such agencies; or (6) if the applicant is unemployed and has no such tax return, obtain another form of independent verification, and submit to Authority, upon request, satisfactory documentation for review and approval prior to the household's occupancy of an Affordable Unit.

(i) Tenant Certification. On an annual basis, Authority shall provide the Owner with the income and maximum rent limits that must be used in the process of establishing tenant eligibility for initial occupancy and for determining the eligibility of existing tenants occupying restricted units. Residents must be recertified annually. If upon recertification of the income of a Tenant of an Affordable Unit, the Owner determines that a former Extremely Low Income Household, Very Low Income Household, Low Income Household or Moderate Income Household has an adjusted income exceeding the maximum qualifying income for a Moderate Income household, such Tenant's lease shall be permitted to continue occupying the Affordable Unit and upon expiration of the Tenant's lease and upon sixty (60) calendar days written notice, the rent shall be increased to the lesser of thirty percent (30%) of actual adjusted income of the Tenant, and the Owner shall rent the next available Affordable Unit to a Very Low Income Household, Low Income Household or Moderate Income Household as applicable, to meet the requirements of this Agreement.

(j) Notice to Tenants. Owner shall give written notice to all Tenants of Affordable Units at the following times:

i. Upon initial move-in/lease execution, Owner shall give written notice, to all Tenants of Affordable Units, of the duration of the rent restrictions under this Agreement. Owner shall maintain, in its files, a copy of each such notice containing each tenant's signed acknowledgement of the notice required hereunder or other proof of delivery of such notice. The notice shall state that the rent restrictions under this Agreement shall be for the Term of this Agreement; but in any event shall terminate not sooner than December 31, 2067. Upon termination of the rent restriction period under this Agreement, rents may be set at market rates unless otherwise restricted by some other legal, regulatory, or contractual requirement.

ii. Twelve (12) months prior to the termination of the rent restriction period under this Agreement, or at such other time as may be required by law, Owner must give written notice to its tenants of the termination of the restrictions on the Restricted Units before their rents may be raised to market rent levels.

iii. Ninety (90) calendar days prior to the termination of the rent restriction period under this Agreement, or at such other time as may be required by law, Owner must again give written notice to its tenants of the termination of the restrictions on the Restricted Units before their rents may be raised to market rent levels.

(k) Tenant Complaints. Owner shall establish Tenant complaint procedures as described in the grievance procedure attached to this Agreement as Attachment No. 5.

(l) Termination of Tenancy. A tenancy may be terminated without being deemed an "eviction" under the following circumstances: (1) death of the sole tenant; (2) by the Tenant, at the expiration of the term of tenancy; (3) by abandonment of the premises by the Tenant, provided Owner complies with the provisions of Section 1951.3 of the California Civil Code to establish such abandonment; and (4) by Owner, where the Tenant has furnished or contradicted information to Owner which fails to establish the Tenant's financial eligibility to remain in the Tenant's Affordable Unit, provided Owner gives the Tenant written notice of such termination pursuant to Section 1946 of the California Civil Code. Any termination of a tenancy other than for the reasons set forth in this section shall constitute an "eviction."

(m) Eviction. Owner shall have the right to evict a Tenant upon material non-compliance with the lease, which includes: (1) one or more substantial violations of the lease, or (2) habitual minor violations of the lease which include (A) disrupting the livability of the building; (B) adversely affecting the health or safety of any person or the right of any tenant to the quiet enjoyment of the leased premises and related facilities; (C) Interfering with the management of the building, or (D) having an adverse financial effect on the building. Rent shall be due on the first calendar day of the rental period but shall not be late until after the fifth (5th) calendar day of that period. Unjustified non-payment of rent after the fifth calendar day of the rental period but before either the running of a three-day notice to pay rent or quit or the close of business of the day after the day on which a hearing decision is issued shall constitute a minor violation under the lease, but non-payment of rent or any other financial obligation under the lease after either such period shall constitute material non-compliance with the lease.

8. Occupancy Standards.

Occupancy of the Affordable Units shall be consistent with the Space and Occupancy Standards set forth in Section 501, et seq. of the Uniform Housing Code. These occupancy standards determine the minimum and maximum number of persons who may reside in an Affordable Unit. Deviations from these standards may be allowed only with the prior written approval of the Authority Designated Representative. Provided that there is no inconsistent federal requirement applicable to the Affordable Units, the maximum and minimum number of persons in a unit shall be as follows (provided, that to the extent the following is inconsistent with any applicable State or Federal standards, the stricter standard, i.e., higher minimum number or lower maximum number, shall apply):

Unit-type	Minimum number	Maximum number
Studio or SRO	1	2
One-bedroom	1	3
Two-bedroom	2	5
Three-bedroom	4	7
Four-bedroom	5	9

9. Covenants Run with the Land; Enforceable by Authority, City and Tenants.

All conditions, covenants and restrictions contained in this Agreement shall be covenants running with the land and shall be enforceable against Owner or any subsequent owner of the Property who violates a covenant or restriction and each successor in interest who continues the violation by any of the following:

(a) Authority;

(b) The City;

(c) A resident of any of the Affordable Units;

(d) A former resident of an Affordable Unit;

(e) An Applicant seeking to enforce the covenants or restrictions for a particular Affordable Unit, if the applicant conforms to all of the following:

i. is an Eligible Household;

ii. is able and willing to occupy that particular Affordable Unit; and

iii. Was denied occupancy of that particular Affordable Unit due to an alleged breach of a covenant or restriction set forth in this Agreement; and

(f) A person on an affordable housing waiting list who is an Eligible Household and who is able and willing to occupy an Affordable Unit.

10. Rights of Third Parties.

Except as otherwise expressly provided in Section 9 of this Agreement, this Agreement shall not be deemed to confer any rights upon, nor obligate either of the Parties to this Agreement to any person or entity not a Party to this Agreement, and the Parties explicitly disclaim any intent to create a third Party beneficiary relationship with any person or entity as a result of this Agreement.

11. Enforcement Rights.

Authority and those listed in Section 9 shall have the right, in the event of any breach of any such agreement or covenant, to exercise all the rights and remedies, and

to maintain any actions at law or suit in equity or other proper proceedings to enforce the curing of such breach of agreement or covenant.

12. Restrictions on Transfer.

During the term of this Agreement, any Transfer shall be subject to all of the applicable requirements of the Loan Agreement, including, but not limited to, Article 7 of the Loan Agreement, which is incorporated herein by this reference. Notwithstanding the full repayment of the Authority Loan, or any other termination or expiration of the Loan Agreement prior to the expiration of the term of this Agreement, the provisions of Article 7 of the Loan Agreement, and any other provision of the Loan Agreement applicable to a Transfer, shall continue in full force and effect during the term of this Agreement.

13. Rights of Lenders; Subordination.

No violation or breach of the covenants, conditions, restrictions, provisions or limitations contained in this Agreement shall defeat or render invalid or in any way impair the lien or charge of any deed of trust or other encumbrance permitted by the Loan Agreement. Unless expressly subordinated by a recorded instrument duly executed by the Designated Representative of Authority or his or her designee, this Agreement and the covenants contained herein shall not be subordinate to any deed of trust, mortgage or other encumbrance. Prior to the recordation of the deed of trust securing any loan to which this Agreement is to be subordinated, the Designated Representative of the Authority or designee shall execute such instruments as may be necessary to subordinate this Agreement and the covenants contained herein to the lien of the beneficiary of such deed of trust. Anyone to whose lien this Agreement is subordinate, who acquires title to the Property by foreclosure, deed in lieu of foreclosure, trustee's sale or similar transfer of title, and the assignees and transferees of such holder, shall not be subject to or bound by the requirements of this Agreement.

14. Term of this Agreement.

Every covenant and condition and restriction contained in this Agreement shall remain in effect for the Term of this Agreement. Provided, however, that the Term of this Agreement shall be extended automatically for a period of time equal to any period of documented and continuous noncompliance with the terms of this Agreement by Owner following notice as provided in Section 15 hereof.

15. Notice and Opportunity to Cure.

Prior to exercising any remedies hereunder, Authority shall give Owner notice of such default. Authority shall also give simultaneous notice of default to the Tax Credit Equity Investor and any person or entity having a security interest in the Property secured by a lien that is superior to this Agreement. If the default is reasonably capable of being cured within thirty (30) days, Owner shall have such period to effect a cure prior

to exercise of remedies by Authority. If the default is such that it is not reasonably capable of being cured within thirty (30) days, and Owner (a) initiates corrective action within said period, and (b) diligently, continually, and in good faith works to effect a cure as soon as possible, then Owner shall have such additional time as is reasonably necessary to cure the default prior to exercise of any remedies by Authority. If Owner fails to take corrective action or to cure the default within a reasonable time, Authority shall give Owner and each of the investment member and managing members, or partners of Owner (as applicable) written notice thereof, whereupon the investor member or partner may remove and replace the manager(s), or general partner(s), with a substitute manager(s), or general partner(s), who shall effect a cure within a reasonable time thereafter in accordance with the foregoing provisions. In no event shall Authority be precluded from exercising remedies if Authority's security in the Property becomes or is about to become materially jeopardized by any failure to cure a default or the default is not cured within one hundred eighty (180) days after the first notice of default is given.

16. Remedies.

If a violation of any of the covenants or provisions of this Agreement remains uncured after the time period set forth in Section 15, above, Authority and its successors and assigns, without regard to whether Authority or its successors and assigns is an owner of any land or interest therein to which these covenants relate, may institute and prosecute any proceedings at law or in equity to abate, prevent or enjoin any such violation or attempted violation or to compel specific performance by Owner of its obligations hereunder. In addition, a material breach of this Agreement that remains uncured following the required notice period shall subject Owner to debarment and disqualification from any further Authority financial assistance. Authority may report any such material breach of this Agreement that remains uncured following the required notice period to the City of Los Angeles, State of California and/or the U.S. Department of Housing and Urban Development. No delay in enforcing the provisions hereof as to any breach or violation shall impair, damage or waive the right of any Party entitled to enforce the provisions hereof or to obtain relief against or recover for the continuation or repetition of such breach or violations or any similar breach or violation hereof at any later time.

17. Non-Liability of Officials, Employees and Agents.

The Authority’s commissioners, officers, employees and agents shall not be personally liable to Owner or any other person for any obligation created under the terms of this Agreement.

18. Indemnity.

Notwithstanding any insurance coverage, Owner shall indemnify, defend and hold the Authority Indemnified Parties harmless against any losses, damages, liabilities, claims, demands, judgments, actions, court costs and legal or other expenses (including

reasonable attorneys' fees and costs) which the Authority Indemnified Parties may incur as a direct or indirect result of (a) Owner's failure to perform any obligations as and when required by this Agreement; (b) any failure of any of Owner's representations or warranties to be true or complete; or (c) any act or omission by Owner or any contractor, subcontractor, Management Agent or supplier with respect to the Property or the Affordable Units, except where such losses are caused by the negligence or willful misconduct of the Authority Indemnified Parties. Owner shall pay immediately upon demand, any amounts owing under this Indemnity. The duty of Owner to indemnify includes the duty to defend the Authority Indemnified Parties in any court action, administrative action or other proceeding brought by any third Party arising from this Agreement. The Authority Indemnified Parties may make all reasonable decisions with respect to its/their representation in any legal proceeding, including but not limited to selection of counsel. Owner's duty to indemnify shall survive the expiration of the Term of this Agreement.

19. Approvals.

(a) Except as otherwise expressly provided in this Agreement, approvals required of Authority or Owner in this Agreement shall not be unreasonably withheld or delayed. All approvals shall be in writing. Failure by either Party to approve a matter within the time provided for approval of the matter shall not be deemed a disapproval, and failure by either Party to disapprove a matter within the time provided for approval of the matter shall not be deemed an approval.

(b) Whenever this Agreement calls for Authority approval, consent, or waiver, the written approval, consent, or waiver of the Authority Designated Representative shall constitute the approval, consent, or waiver of the Authority, without further authorization required from the Authority Board. The Authority hereby authorizes the Authority's Designated Representative to deliver such approvals or consents as are required by this Agreement, or to waive requirements under this Agreement, on behalf of the Authority. The Authority Designated Representative or designee is further authorized to make such modifications to this Agreement as may be necessary or appropriate, so long as such modification does not adversely affect the receipt of any material benefit by Authority pursuant to this Agreement. Any other amendment or material modification to this Agreement shall require approval by the Authority Board.

20. Construction and Interpretation of Agreement.

(a) The language in all parts of this Agreement shall in all cases be construed simply, as a whole and in accordance with its fair meaning and not strictly for or against any Party. The parties hereto acknowledge and agree that this Agreement has been prepared jointly by the parties and has been the subject of arm's length and careful negotiation over a considerable period of time, that each Party has been given the opportunity to independently review this Agreement with legal counsel, and that each Party has the requisite experience and sophistication to understand, interpret, and agree to the particular language of the provisions hereof. Accordingly, in the event of

an ambiguity in or dispute regarding the interpretation of this Agreement, this Agreement shall not be interpreted or construed against the Party preparing it, and instead other rules of interpretation and construction shall be utilized.

(b) If any term or provision of this Agreement, the deletion of which would not adversely affect the receipt of any material benefit by any Party hereunder, shall be held by a court of competent jurisdiction to be invalid or unenforceable, the remainder of this Agreement shall not be affected thereby and each other term and provision of this Agreement shall be valid and enforceable to the fullest extent permitted by law. It is the intention of the parties hereto that in lieu of each clause or provision of this Agreement that is illegal, invalid, or unenforceable, there be added as a part of this Agreement an enforceable clause or provision as similar in terms to such illegal, invalid, or unenforceable clause or provision as may be possible.

(c) Any titles of the articles, sections or subsections of this Agreement are inserted for convenience of reference only and shall be disregarded in interpreting any part of its provision.

(d) References in this instrument to this “Agreement” mean, refer to and include this instrument as well as any riders, exhibits, addenda and attachments hereto or other documents expressly incorporated by reference in this instrument. All of the Attachments appended to this Agreement are hereby incorporated herein by this reference as though fully set forth herein. Any references to any covenant, condition, obligation, and/or undertaking “herein,” “hereunder,” or “pursuant hereto” (or language of like import) shall mean, refer to, and include the covenants, obligations, and undertakings existing pursuant to this instrument and any riders, Attachments, addenda, and attachments or other documents affixed to or expressly incorporated by reference in this instrument.

(e) As used in this Agreement, and as the context may require, the singular includes the plural and vice versa, and the masculine gender includes the feminine and vice versa.

(f) In the event that any provisions of this Agreement and the Loan Agreement conflict, the terms of this Agreement shall control.

(g) Time is of the essence in this Agreement.

21. Relationship of the Parties.

Nothing contained in this Agreement shall be deemed or construed to create a partnership, joint venture, or any other similar relationship between the parties hereto or cause Authority to be responsible in any way for the debts or obligations of Owner or any other person.

22. Compliance with Law.

This Agreement shall be interpreted under and be governed by the laws of the State of California. Owner agrees to comply with all the requirements now in force, or which may hereafter be in force, of all municipal, county, state and federal authorities, pertaining to the development and use of the Property and the Improvements, as well as operations conducted thereon. The judgment of any court of competent jurisdiction, or the admission of Owner or any lessee or permittee in any action or proceeding against them, or any of them, whether Authority be a Party thereto or not, that Owner, -lessee or permittee has violated any such ordinance or statute in the development and use of the Property shall be conclusive of that fact as between Authority and Owner.

23. Binding Effect.

This Agreement, and the terms, provisions, promises, covenants and conditions hereof, shall be binding upon and shall inure to the benefit of the parties hereto and their respective heirs, legal representatives, successors and assigns.

24. Notices.

Formal notices, demands, and communications between the Authority and the Owner shall be sufficiently given if, and shall not be deemed given unless dispatched by certified mail, return receipt requested, or by electronic facsimile transmission followed by delivery of a “hard” copy, or by personal delivery (including by means of professional messenger service, courier service such as United Parcel Service or Federal Express, or by U.S. Postal Service), with a receipt showing date of delivery, to the principal offices of the Authority and the Owner:

Authority:	The Los Angeles Grand Avenue Authority Chief Executive Office 500 West Temple Street Los Angeles, CA 90012 Attn: Chief Administrative Officer
with copies to:	The Los Angeles Grand Avenue Authority Office of County Counsel c/o County of Los Angeles 500 West Temple Street Los Angeles, CA 90012 Attn: County Counsel
with copies to:	The Los Angeles Grand Avenue Authority c/o Los Angeles City Attorney's Office 200 North Main Street, 8th Floor Los Angeles, CA 90012 Attn: City Attorney

Owner:	Grand Avenue M Housing Partners, LLC c/o The Related Companies of California 18201 Von Karman Avenue, Suite 900 Irvine, California 92612 Attention: William A. Witte
With copies to:	BF Grand Avenue, LP c/o Boston Financial Investment Management, LP 101 Arch Street, 13th Floor Boston, MA 02110 Attn: Asset Management- Parcel M Grand Avenue Apartments Holland & Knight LLP 10 St. James Avenue Boston, MA 02116 Attn: James E. McDermott, Esq.
With copies to:	Bocarsly Emden Cowan Esmail & Arndt LLP 633 West Fifth Street, 70th Floor Los Angeles, CA 90071 Attn: Lance Bocarsly

Such written notices, demands and communications may be sent in the same manner to such other addresses as the affected Party may from time to time designate by mail as provided in this Section 24. Delivery shall be deemed to have occurred at the time indicated on the receipt for delivery or refusal of delivery.

25. Counterparts.

This Agreement may be executed in counterparts, each of which shall be an original and all of which shall constitute one and the same instrument. The signature pages of one or more counterpart copies may be removed from such counterpart copies and all attached to the same copy of this Agreement, which, with all attached signature pages, shall be deemed to be an original Agreement.

26. Partial Release of this Agreement.

In conjunction with the partial reconveyance of the Authority Loan Deed of Trust, and in accordance with the Authority Loan Deed of Trust and the Loan Agreement, the Authority shall: (i) execute any and all documents necessary to subordinate this Agreement to the Map and the REA (as such terms are defined in the Authority Loan Deed of Trust), and (ii) concurrent with the execution of the sub-ground lease for the Market Rate Housing Parcels, partially release this Agreement as an encumbrance

against the Market Rate Housing Parcels (as defined in the Authority Loan Deed of Trust); provided, however this Agreement shall remain as an encumbrance against the Affordable Housing Parcels (as defined in the Authority Loan Deed of Trust), and such partial release of this Agreement shall in no way limit, waive, or otherwise modify the Owner's obligation to comply with all of the obligations set forth in this Agreement.

SIGNATURES APPEAR ON NEXT PAGE

IN WITNESS WHEREOF, the Authority and the Owner have signed this Agreement as of the date set forth in the first paragraph, above.

"AUTHORITY"

THE LOS ANGELES GRAND AVENUE AUTHORITY, a California joint powers authority

By: _____

Name: _____

Its: _____

APPROVED AS TO FORM:

CARMEN A. TRUTANICH,
CITY ATTORNEY

By: _____
Timothy J. Chung
Deputy City Attorney

APPROVED AS TO FORM:

JOHN F. KRATTLI,
COUNTY COUNSEL

By: _____
Helen S. Parker
Principal Deputy County Counsel

Signatures Continue on the Following Page

BORROWER:

GRAND AVENUE M HOUSING PARTNERS, LLC, a California limited liability company

By: Related/Parcel M Development Co., LLC, a California limited liability company, its manager

By: _____
William A. Witte
President

SIGNATURES MUST BE NOTARIZED

ATTACHMENT NO. 1

LEGAL DESCRIPTION

All the certain real property located in the County of Los Angeles, State of California, described as follows:

ATTACHMENT NO. 2

Authority MAXIMUM RENTS AND OCCUPANCY INCOME LIMITS FOR NEW PROJECTS

[BEHIND THIS PAGE]

ATTACHMENT NO. 3

TENANT CERTIFICATION FORM

[BEHIND THIS PAGE]

ATTACHMENT NO. 4

AFFIRMATIVE MARKETING REQUIREMENTS

[BEHIND THIS PAGE]

ATTACHMENT NO. 5

GRIEVANCE PROCEDURE

[BEHIND THIS PAGE]

ATTACHMENT NO. 6

PROPERTY MANAGEMENT PLAN OUTLINE

[BEHIND THIS PAGE]

ATTACHMENT NO. 7

MANDATORY ADDENDUM TO LEASE OR RENTAL AGREEMENT FOR RESTRICTED UNITS

[BEHIND THIS PAGE]

ATTACHMENT NO. 8

CERTIFICATE OF CONTINUING PROGRAM COMPLIANCE

[BEHIND THIS PAGE]

LEGAL DESCRIPTION

PARCEL 1

Master Parcel A and a portion of Airspace Parcel C of Parcel Map L.A. No. 2006-4125, in the City of Los Angeles, County of Los Angeles, State of California, as per map filed in Book 357, Pages 71 through 76, inclusive, of Parcel Maps, Records of said County.

Except therefrom that portion of said Airspace Parcel C lying northeasterly of the northeasterly line of said Master Parcel A.

PROFESSIONAL LAND SURVEYOR
JOHN CHIAPPE JR.
No. 7230
Exp. 12-31-12
STATE OF CALIFORNIA

John Chiappe Jr., PLS 7230
PSOMAS

Date: 7/3/2012

SCHEDULE 7

LEGAL DESCRIPTION OF GRAND PROMENADE EASEMENT AREA

That portion of Lot 1 of Tract No. 30780 in the City of Los Angeles, County of Los Angeles, State of California as per map recorded in Book 912, pages 39 thru 45 inclusive of Maps in the Office of the County Recorder of said County, lying northeasterly of a line parallel with and northeasterly 174.58 feet from the southwesterly line of said Lot 1.