County of Los Angeles
CHIEF EXECUTIVE OFFICE
Kenneth Hahn Hall of Administration
500 West Temple Street, Room 713, Los Angeles, California 90012
(213) 974-1101
http://ceo.lacounty.gov

WILLIAM T FUJIOKA
Chief Executive Officer

Board of Supervisors
GLORIA MOLINA
First District

MARK RIDLEY-THOMAS
Second District

ZEV YAROSLAVSKY
Third District

DON KNABE
Fourth District

MICHAEL D. ANTONOVICH
Fifth District

July 31, 2012

ADOPTED
BOARD OF SUPERVISORS
COUNTY OF LOS ANGELES
32 July 31, 2012
SACHI A. HAMAI
EXECUTIVE OFFICER

The Honorable Board of Supervisors
County of Los Angeles
383 Kenneth Hahn Hall of Administration
500 West Temple Street
Los Angeles, CA 90012

Dear Supervisors:

DEPARTMENT OF PUBLIC WORKS:
REVISED KENNETH HAHN EASTERN RIDGELINE PROJECT
CERTIFY ADDENDUM TO ENVIRONMENTAL IMPACT REPORT
ADOPT RESOLUTION AND APPROVE REVISED PROJECT BUDGET
ADOPT, ADVERTISE AND AWARD
SPECS. 7188; CAPITAL PROJECT NO. 69253
(SECOND DISTRICT) (3 VOTES)

SUBJECT

Certification of the Addendum to the previously certified Environmental Impact Report and approval of the attached Resolution will authorize the Chief Executive Officer, or his designee, to complete the submission of an application and, if awarded, accept additional funds from the Baldwin Hills Conservancy that were authorized under Proposition 40 for trail extension of the Kenneth Hahn Eastern Ridgeline Project.

This action will approve the environmental documentation, adopt the plans and specifications, advertise for construction bids, and authorize the award and execution of a construction contract for the revised Kenneth Hahn Eastern Ridgeline Project in the Baldwin Hills portion of the Second Supervisorial District.

IT IS RECOMMENDED THAT THE BOARD:

1. Certify that the Addendum to the previously certified final Environmental Impact Report for the Kenneth Hahn State Recreation Area General Plan Amendment has been completed in compliance with the California Environmental Quality Act and reflects the independent judgment and analysis of the County; find that the Board has reviewed and considered the information contained in the Addendum and the related mitigation measures prior to approving the Project.

2. Adopt the Resolution approving the County of Los Angeles' filing of an application for an additional $721,900 grant pursuant to the Specified Local Assistance Grant Program of the Clean Water, Clean Air, Safe Neighborhood Parks, and Coastal Protection Bond Act of 2002 (Proposition 40).

3. Authorize the Chief Executive Officer, or his designee, as agent of the County of Los Angeles to accept the additional funds if the grant is awarded; conduct all negotiations; and execute and submit all documents, including, but not limited to, the project grant agreement, amendments, and payment requests necessary for the completion of the Project.

4. Approve the revised Project budget for $2,978,900 Kenneth Hahn Eastern Ridgeline Project, Capital Project No. 69253.

5. Approve the revised Kenneth Hahn Eastern Ridgeline Project; adopt plans and specifications for construction of the Kenneth Hahn Eastern Ridgeline Project at an estimated construction cost of $1,922,500; and instruct the Executive Officer of the Board of Supervisors to advertise for bids to be received and opened on September 4, 2012, in accordance with the Instruction Sheet for Publishing Legal Advertisements.

6. Authorize the Director of Public Works, or her designee, to execute a consultant services agreement with the apparent Lowest Responsive and Responsible Bidder to prepare a baseline construction schedule and Storm Water Pollution Prevention Plan for a $7,000 not-to-exceed fee, and to establish the effective date thereof.

7. Delegate to the Director of Public Works, or her designee, the authority to determine, in accordance with the applicable contract and bid documents, whether the apparent Lowest Responsive and Responsible Bidder has timely prepared a satisfactory baseline construction schedule and satisfied all the conditions for contract award, including the criteria adopted by the Board for contract award. Upon determination that all such conditions have been satisfied, authorize the Director of Public Works, or her designee, to award and execute the construction contract, in the form previously approved by County Counsel, to the apparent Lowest Responsive and Responsible Bidder, and to establish the effective date of the contract upon receipt of acceptable performance and payment bonds and evidence of required contractor insurance.

8. Authorize the Chief Executive Officer, or his designee, as agent of the County of Los Angeles to execute a Consent Agreement with Plains Exploration & Production Company to allow for the construction of a trail over a previously granted easement to Plains Exploration & Production Company.

PURPOSE/JUSTIFICATION OF RECOMMENDED ACTION

Approval of the recommended actions will certify the Addendum to the previously certified Environmental Impact Report (EIR) for the Kenneth Hahn Eastern Ridgeline Project (proposed Project) and allow the Department of Public Works (Public Works) to solicit bids and award a construction contract for the proposed Project.

Approval of the attached Resolution (Attachment C) will authorize the Chief Executive Officer, or his designee, to complete the submission of an application for grant funds for an additional $721,900 and, if awarded, accept the Proposition 40 funds from the Baldwin Hills Conservancy (BHC) for completion of the proposed Project at the Kenneth Hahn State Recreation Area, a State-owned, County-operated park. The additional work will consist of an extension of the walking trail from the top of the Kenneth Hahn Eastern Ridgeline to the five point intersection at La Brea Avenue and Stocker Street. This new 10-foot-wide trail extension will be built on the site of the existing dirt trail and will include native plants and trees.

On September 21, 2010, the Board approved an application for and acceptance of $2,257,000 in grant funds by the Department of Parks and Recreation (Parks and Recreation) from the BHC pursuant to the Proposition 40 for the proposed Project.

The original scope of work approved by the Board on September 21, 2010, for the proposed Project consisted of: construction of a family friendly recreation area with three small zones with fitness equipment in each zone; one large fitness zone with equipment, including three child friendly concrete sculptures, as well as benches; a new walking trail connecting the proposed Project site with the existing parking lot; drought tolerant and/or native plant landscaping; and installation of various waste receptacles around the proposed Project area. The proposed Project will also include installation of appropriate Americans with Disabilities Act accommodations and directional signage throughout the area. A pedestrian crosswalk at five point intersection going east towards Norman O. Huston Park in the City of Los Angeles will be made accessible by means of mutual work agreement with the City of Los Angeles.

Construction of the proposed Project will be completed by a qualified contractor retained through the County's competitive/low bid process and will be managed by Public Works.

Upon receipt and review of all bids, the apparent Lowest Responsive and Responsible Bidder will be determined. If the Lowest Responsive and Responsible bid can be awarded within the Board-approved project budget, Public Works will proceed with the contract award process.

Approval of the recommended actions will also authorize the execution of a consultant services agreement with the apparent Lowest Responsive and Responsible Bidder to prepare a baseline construction schedule that conforms to the County's schedule specification for a $7,000 not-to-exceed fee, which will be subtracted from its total lump sum construction bid. Preparation of a baseline schedule is critical to successfully manage construction activities by the contractor and the County, and a responsible contractor must be able to produce such a construction schedule. Bid specifications provide that if the apparent Lowest Responsive and Responsible Bidder fails to complete an acceptable schedule, Public Works may return to the Board to recommend that the Bidder be determined nonresponsive and recommend awarding the construction contract to the next apparent Lowest Responsive and Responsible Bidder, contingent on that Bidder completing a baseline schedule that conforms to the County's specifications.

The Consent Agreement with Plains Exploration & Production Company (PXP) will allow for construction of the trail over two, 10-foot-wide oil line easements and one, 60-foot-wide roadway easement, which were previously granted to PXP. In exchange for the right to construct the trail over PXP's easement, the County shall agree to indemnify PXP for any issues arising from or connected to the trial (Attachment D).

Green Building/Sustainable Design Program

The proposed Project supports the Board's Green Building/Sustainable Design Program by implementing the use of drought tolerant landscaping to reduce the amount of potable water consumed.

Implementation of Strategic Plan Goals

The Countywide Strategic Plan directs the provisions of Operational Effectiveness (Goal 1) by maximizing the effectiveness of process, structure, and operations to support timely delivery of customer-oriented and efficient public services. It also directs that we ensure Fiscal Sustainability (Goal 2) by strengthening and enhancing the County's capacity to sustain essential County services through proactive and prudent

fiscal policies and stewardship. Lastly, it directs us to provide Integrated Services Delivery (Goal 3) by maximizing opportunities to measurably improve client and community outcomes and leverage resources through the continuous integration of health, community, and public safety services in the Baldwin Hills portion of the Second Supervisorial District.

FISCAL IMPACT/FINANCING

The total Project cost estimate is $2,978,900 and includes construction, change order allowance, Civic Art allocation, plans and specifications, consultant services, jurisdictional reviews, and County services.

The proposed Project is funded by grant funds from the BHC under Proposition 40 for $2,971,900 and Second District net County cost for $7,000.

Sufficient appropriation to fund the proposed Project is available in the Fiscal Year 2012-13 Capital Projects and Refurbishments Budget.

The Project Schedule and Budget Summary are included in Attachment A.

Operating Budget Impact

Parks and Recreation anticipates a one-time start-up cost of $20,000, and ongoing costs of $67,000 to operate and maintain the trail development. The Chief Executive Office will review the cost estimates and work with Parks and Recreation to determine the appropriate level of operating requirements and available funding.

Based upon the proposed Project schedule, one-time and ongoing operating costs resulting from this development project will be incurred by Parks and Recreation in Fiscal Year 2013-14.

FACTS AND PROVISIONS/LEGAL REQUIREMENTS

The contract contains terms and conditions supporting the Board's ordinances and policies, including, but not limited to: County Code Chapter 2.200, Child Support Compliance Program; County Code Chapter 2.202, Contractor Responsibility and Debarment; County Code Chapter 2.203, Contractor Employee Jury Service Program; County Code Chapter 2.206, Defaulted Property Tax Reduction Program; Board Policy 5.050, County's Greater Avenues for Independence (GAIN) and General Relief Opportunities for Work (GROW) Programs; Board Policy 5.060, Reporting of Improper Solicitations; Board Policy 5.110, Contract Language to Assist in Placement of

Displaced County Workers; and Board Policy 5.135, Notice to Contract Employees of Newborn Abandonment Law (Safely Surrendered Baby Law).

Applicable law, including the State Public Contract Code, requires the County to award construction contracts to the apparent Lowest Responsive and Responsible Bidder, which refers to the firm that: (1) submits the bid with the lowest cost; (2) is deemed by the County to be "responsive" to specific criteria under the solicitation, including, but not limited to, licensure, bonding, and insurance requirements; and (3) is determined by the County to be a "responsible" bidder by exhibiting the quality, fitness, capacity, experience, and trustworthiness to satisfactorily perform the work required under the bid solicitation.

To ensure that the contract is awarded to the Lowest Responsive and Responsible Bidder with a satisfactory history of performance, bidders are required to report violations of the False Claims Act, criminal convictions, civil litigation, defaulted contracts with the County, complaints filed with the contractors' State License Board, labor law/payroll violations, and debarment actions. As provided for in Board Policy 5.140, the information reported by the contractor will be considered before making a recommendation to award.

As required by the Board, the proposed Project cost includes 1 percent of design and construction costs to be allocated to the Civic Art Fund per your Board's Civic Art Policy adopted on December 7, 2004.

ENVIRONMENTAL DOCUMENTATION

An EIR for the Kenneth Hahn State Recreation Area, which addressed the Kenneth Hahn State Recreation Area General Plan Amendment, was certified by the California State Department of Parks and Recreation on October 12, 2002, which covered general improvements. On October 21, 2003, the Board found that the proposed Project was consistent with the EIR, and authorized the submittal of an application for grant funds for the Kenneth Hahn State Recreation Area, Eastern Ridgeline project, under the Clean Water, Clean Air, Safe Neighborhoods, and Coastal Protection Bond Act of 2002.

On September 21, 2010, the Board certified an addendum to EIR for the proposed Project, which included a family friendly recreational area with fitness zones, benches, walking trail connecting the site to the parking lot and native planting. Since certification of the previous Addendum to the EIR, changes to the originally approved project, including extension of the walking trail from the fitness zones to a five point intersection at La Brea Avenue and Stocker Street and native plants and trees an Initial Study was completed under the California Environmental Quality Act (CEQA) to determine the

impacts of the revised proposed Project. The Initial Study indicated that some changes and additions to the EIR were necessary to fully describe the planned reduction to the prior scope for the recreation area; however, it was determined that the preparation of a new EIR was not required under Section 15162 of the CEQA Guidelines, since none of the conditions necessitating the preparation of a subsequent EIR, such as new significant environmental effects or a substantial increase in the severity of previously identified effects have occurred. The impacts from the extended trail are within the scope of impacts analyzed in the EIR and previously certified Addendum. Therefore, an Addendum to the EIR was prepared under CEQA (Attachment E).

Upon the Board's approval of the proposed Project, Public Works will file a Notice of Determination with the Registrar-Recorder/County Clerk in accordance with Section 21152(a) of the California Public Resources Code.

CONTRACTING PROCESS

An as-needed services agreement with NUVIS Landscape Architecture and Planning, Agreement PW 13215, approved by the Board on October 7, 2008, will be used for the construction administration services of this proposed Project. The as-needed services agreement was acquired through a qualifications-based process through Public Works' Architectural Engineering Division.

A standard contract, in the form previously approved by County Counsel, will be used. The standard Board-directed clauses that provide for contract termination, renegotiation, and hiring qualified displaced County employees will be included in the contract.

As required by the Board, language has been incorporated into the proposed Project specifications stating that the contractor shall notify its employees, and shall require each subcontractor to notify its employees that they may be eligible for the Federal Earned Income Credit under the Federal income tax law (Federal Income Tax Law, Internal Revenue Service Notice 1015).

Advertising for bids will be in accordance with the County's standard Instruction Sheet for Publishing Legal Advertisements (Attachment B).

As requested by the Board on February 3, 1998, this contract opportunity will be listed on the Doing Business with Us website.

The contract requires the contractor to pay its employees applicable prevailing wages in accordance with the California Labor Code.

Participation by Community Business Enterprises (CBE) in the proposed Project is encouraged through Public Works' Capital Projects' CBE Outreach Program and by monitoring the good faith efforts of bidders to utilize CBEs.

IMPACT ON CURRENT SERVICES (OR PROJECTS)

These recommended actions will have no impact on current services. During construction, we will implement the proposed Project in a manner that minimizes any impacts relative to public use of the Kenneth Hahn State Recreation Area.

CONCLUSION

Please return one adopted copy of this Board letter to the Chief Executive Office, Capital Projects Division; Public Works, Project Management Division II; and Parks and Recreation.

Respectfully submitted,

WILLIAM T FUJIOKA
Chief Executive Officer

WTF:RLR:DJT
SW:LL:zu

Attachments

c: Executive Office, Board of Supervisors
County Counsel
Arts Commission
Parks and Recreation
Public Works

ATTACHMENT A
July 31, 2012

DEPARTMENT OF PUBLIC WORKS:
REVISED KENNETH HAHN EASTERN RIDGELINE PROJECT
CERTIFY ADDENDUM TO ENVIRONMENTAL IMPACT REPORT
ADOPT RESOLUTION AND APPROVE REVISED PROJECT BUDGET
ADOPT, ADVERTISE AND AWARD
SPECS. 7188; CAPITAL PROJECT NO. 69253
(SECOND DISTRICT) (3 VOTES)

I. PROJECT SCHEDULE

Project Activity	Scheduled Completion Date	Revised Scheduled Completion Date
Needs Assessment	N/A	N/A
Design Schematic Design Construction Document Jurisdictional Approval	 12/06/10 03/31/11 07/21/11	 10/28/11 11/08/11 05/03/12
Construction Bid and Award	11/08/11	10/22/12
Construction Substantial Completion Project Acceptance	 11/13/12 01/16/13	 09/19/13 11/19/13

II. PROJECT BUDGET SUMMARY

Project Activity	Project Budget	Impact Of This Action	Proposed Project Budget
Land Acquisition	N/A		
Construction			
Low Bid Construction Contract	$ 1,444,000	$ 478,500	$ 1,922,500
Change Orders – Construction (15 percent)	$ 219,000	$ 71,500	$ 290,500
Civic Arts	$ 16,000		$ 16,000
Subtotal	**$ 1,679,000**	**$ 550,000**	**$ 2,229,00**
Plans and Specifications	**$ 139,000**	**$ 58,000**	**$ 197,000**
Consultant Services			
Deputy Inspection/Materials Testing		$ 50,000	$ 50,000
Hazardous Materials	$ 20,000		$ 20,000
Geotech/Soils Test	$ 20,000		$ 20,000
Topographic Surveys	$ 25000	$ 6,000	$ 31,000
Environmental	$ 7,000	$ 23,900	$ 30,900
Other			
Subtotal	**$ 72,000**	**$ 79,900**	**$ 151,900**

II. PROJECT BUDGET SUMMARY (continued)

Project Activity	Project Budget	Impact Of This Action	Proposed Project Budget
Miscellaneous Expenditures			
Countywide Contract Compliance	$ 8,000	$ 4,000	$ 12,000
Subtotal	**$ 8,000**	**$ 4,000**	**$ 12,000**
Jurisdictional Review/Plan Check/Permit	**$ 25,000**		**$ 25,000**
County Services			
Code Compliance and Quality Control Inspections	$ 60,000	$ 30,000	$ 90,000
Contract Administration	$ 21,000		$ 21,000
Project Management	$ 165,000		$ 165,000
Support Services	$ 13,000		$ 13,000
Document Control	$ 20,000		$ 20,000
Project Technical Support	$ 15,000		$ 15,000
Consultant Contract Recovery	$ 20,000		$ 20,000
Other	$ 20,000		$ 20,000
Subtotal	$ 334,000	$ 30,000	$ 364,000
Total	**$ 2,257,000**	**$ 721,900**	**$ 2,978,900**

ATTACHMENT B
July 31, 2012

DEPARTMENT OF PUBLIC WORKS:
REVISED KENNETH HAHN EASTERN RIDGELINE PROJECT
CERTIFY ADDENDUM TO ENVIRONMENTAL IMPACT REPORT
ADOPT RESOLUTION AND APPROVE REVISED PROJECT BUDGET
ADOPT, ADVERTISE AND AWARD
SPECS. 7188; CAPITAL PROJECT NO. 69253
(SECOND DISTRICT) (3 VOTES)

PUBLISHING LEGAL ADVERTISEMENTS: In accordance with the State of California Public Contract Code Section 20125, you may publish once a week for two weeks in a weekly newspaper or ten times in a daily newspaper. Forward three reprints of this advertisement to Architectural Engineering Division, Department of Public Works, 900 South Fremont Avenue, 8th Floor, Alhambra, California 91803-1331.

OFFICIAL NOTICE
INVITING BIDS

Notice is hereby given that the Director of Public Works will receive sealed bids for furnishings, materials, labor, and equipment required to complete construction for the following work:

SD	SPECS	PROJECT	BID DOC. FEE	DATE OF BID OPENING
2	7188	Kenneth Hahn Eastern Ridgeline 4100 La Cienega Boulevard Los Angeles, CA 90056	$50	September 4, 2012

Copies of the project manual and drawings may be downloaded for free from the Los Angeles County Public Works website http://dpw.lacounty.gov/go/construction contracts; or for $50, copies of the project manual and drawings may be obtained at the Cashier's office, Department of Public Works, 900 South Fremont Avenue, Mezzanine Floor, Alhambra, California 91803. For bid information, please call (626) 458-2563. Each bid shall be submitted on the required form, sealed, and filed at the Cashier's office no later than 11:15 a.m. on September 4, 2012. Bids will be publicly opened, examined, and declared by Public Works at 11:30 a.m. on this date in Conference Room A, 900 South Fremont Avenue, Alhambra, California 91803.

The contractor and all of its subcontractors of any tier shall be required to pay prevailing wages to all workers employed in the execution of the work of improvement in accordance with Labor Code Section 1770 et seq. Copies of prevailing rate of per diem wages are on file at the Department of Public Works, Architectural Engineering Division, which shall be made available to any interested party upon request.

Bids must conform to the drawings and project manual and all bidding requirements. This project requires the prime contractor to possess an active B license classification at the time of bid submittal. The contractor should verify to his/her satisfaction that he/she holds the correct license for this type of project.

PRE-BID CONFERENCE

The Public Works' Project Management Team will hold a nonmandatory prebid conference at 10 a.m. on August 21, 2012, at the project job site to provide information on the project, bidding process, and answer any questions that the potential bidders may have. For further directions, please contact Ms. Loydi Nguyen with the Public Works' Architectural Engineering Division at (626) 458-2180.

OTHER INSTRUCTIONS

The County supports and encourages equal opportunity contracting. The contractor shall make good faith efforts, as defined in Section 2000 of the Public Contract Code, to contract with Community Business Enterprises.

This project is subject to the County's Local Worker Program. As applied to this project, the Local Worker Program establishes an aspirational goal that 40 percent of the construction labor hours worked by California residents on the project be performed by qualified local workers who reside within a 15-mile radius of the project.

The project is subject to State Water Resources Control Board's (SWRCB) new Construction General Permit (CGP) effective July 1, 2010, for Discharges of Storm Water Runoff associated with the construction and land disturbance activities. Bidders are expected to understand and be responsible for all activities required by the State regarding these new requirements.

The Board of Supervisors reserves the right to reject any or all bids or to waive technical or inconsequential errors and discrepancies in bids submitted in the public's interest.

Si necesita información en español, por favor llame al Telefono (626) 458-2563.

Upon 72 hours notice, Public Works can provide program information and publications in alternate formats or make other accommodations for people with disabilities. In addition, program documents are available at our main office in Alhambra (900 South Fremont Avenue), which is accessible to individuals with disabilities. To request accommodations ONLY, or for more ADA information, please contact our departmental ADA Coordinator at (626) 458-4081 or TDD (626) 282-7829, Monday through Thursday, from 7 a.m. to 5:30 p.m.

Con 72 horas de noticia, el Departamento puede proveerle información y publicaciones sobre el programa y formatos alternativos o hacer adaptaciones para incapacitados. Además, documentación sobre el programa está disponsible en nuestra oficina principal en Alhambra (900 South Fremont Avenue), la cual es accesible para individuos con incapacidades. Para solicitar adaptaciones SOLAMENTE, o para mas información del ADA, pongase en contacto con nuestro Coordinador del ADA del Departamento al (626) 458-4081 o TDD (626) 282-7829, de lunes a jueves de las 7 a.m. a 5:30 p.m.

By order of the Board of Supervisors of the County of Los Angeles, State of California dated July 31, 2012.

Specs. 7188

SACHI A. HAMAI, EXECUTIVE OFFICER
OF THE BOARD OF SUPERVISORS
OF THE COUNTY OF LOS ANGELES

ATTACHMENT C
July 31, 2012

RESOLUTION OF THE BOARD OF SUPERVISORS OF THE COUNTY OF LOS ANGELES

AUTHORIZING THE SUBMITTAL OF AN APPLICATION FOR AUGMENTATION OF GRANT FUNDS FOR THE KENNETH HAHN EASTERN RIDGELINE PROJECT, UNDER THE CLEAN WATER, CLEAN AIR, SAFE NEIGHBORHOODS, AND COASTAL PROTECTION BOND ACT OF 2002

WHEREAS, the people of the State of California have enacted the Clean Water, Clean Air, Safe Neighborhoods, and Coastal Protection Bond Act of 2002 which provides funds for the Baldwin Hills Conservancy Grant Program; and

WHEREAS, the Baldwin Hills Conservancy has been delegated the responsibility for the administration of the grant project, setting up necessary procedures; and

WHEREAS, said procedures established by the Baldwin Hills Conservancy require the Grantee to certify by resolution the approval of application(s) before submission of said application(s) to the State; and

WHEREAS, the Grantee will enter into a contract with the Baldwin Hills Conservancy for the Kenneth Hahn Eastern Ridgeline project;

NOW, THEREFORE, BE IT RESOLVED that the County of Los Angeles Board of Supervisors hereby:

1. Approves the filing of an application for local assistance for the above project; and

2. Certifies that Grantee understands the assurances and certification in the application form; and

3. Certifies that Grantee has or will have sufficient funds to operate and maintain the project; and

4. Certifies that Grantee has reviewed and understands the General Provisions contained in the Project Contract shown in the Procedural Guide; and

5. Appoints the Chief Executive Officer, or his designee, as agent to conduct all negotiations, execute and submit all documents, including, but not limited to applications, agreements, payment requests and so on, which may be necessary for the completion of the aforementioned project.

Approved and Adopted on the 31th day of July 2012.

I, the undersigned, hereby certify that the foregoing Resolution was duly adopted by the County of Los Angeles Board of Supervisors following a roll call vote:

ATTEST: SACHI A. HAMAI
EXECUTIVE OFFICER
CLERK OF THE BOARD OF SUPERVISORS

Sachi A. Hamai
Clerk

By _____, Deputy

APPROVED AS TO FORM:

JOHN F. KRATTLI
COUNTY COUNSEL

By Christina Salseda

ATTACHMENT D

Recording Requested by and
when recorded mail to:

Plains Exploration & Production Company
5640 S. Fairfax Ave.
Los Angeles, California 90056
Attention: Land Department

CONSENT TO COMMON USE OF PRIOR RIGHTS EASEMENT

This Consent to Common Use of Prior Right's Easement Agreement (hereinafter the "Agreement") is entered into by and between BALDWIN STOCKER, LLC ("Baldwin"), a California limited liability company, and the Lessor under the Baldwin-Cienega Lease, , whose office address is c/o Helen Wu, J. Arthur Greenfield & Co., 924 Westwood Avenue, Suite 1000, Los Angeles, CA 90024, PLAINS EXPLORATION & PRODUCTION COMPANY, a Delaware Corporation, (hereinafter "PXP"), formerly Stocker Resources, L.P., as operating agent for Chevron USA, Inc. ("Chevron"), the current Lessee under the Baldwin-Cienega Lease described below, with PXP's address at 5640 S. Fairfax Ave., Los Angeles, California 90056, and the County of Los Angeles, a body corporate and politic(hereinafter "COUNTY"), as manager, operator and agent of the Kenneth Hahn State Recreational Area ("KHSRA") for the State of California, the owner of the surface of the KHSRA, hereinafter collectively referred to as the "Parties" is entered into as of this day of May, 2012.

WITNESSETH

WHEREAS, Baldwin is the owner, as successor in interest, of the Lessor's interest under that certain Indenture of Lease dated March 28, 1923, as amended, by and between Anita M. Baldwin, as Lessor, and Pacific Oil Company, Chevron's predecessor in interest, as Lessee, notice of which was recorded in Book 209 at Page 310 of the Official Records of Los Angeles County, California, covering certain lands more particularly therein described, which lease and lands are hereinafter referred to as the "BC Lease"; and

WHEREAS, PXP is the operating agent for Chevron, the current Lessee under the BC Lease, with respect to all matters arising out of or in regard to the Prior Easements under the BC Lease by virtue of an Operating Agreement and Assignment of Production by Chevron to PXP, as amended and extended on the 20th day of February, 2010 but effective as of May 1, 1990, covering the BC Lease (hereinafter the "Operating Agreement"), except for those matters as to which Baldwin either has sole or joint rights and responsibilities with PXP; and

WHEREAS, Baldwin and Chevron, are the owner and co-owner of record of certain easements reserved to them in (1) five separateProperty Acquisition Agreements each dated March 27, 1984, by and between various Baldwin predecessors, as Grantors, and the State of California, acting through the State's Public Works Board, as Grantee, recorded July 24, 1984 as Documents No. 84-879499 through 84-879503, inclusive, of Official Records of Los Angeles County, California, the terms and conditions thereof being identical, a copy of Document No. 84-879499 being attached hereto as Exhibit A (those five Property Acquisition Agreements being herein referred to collectively as the "Property Acquisition Agreements"), and (2) those certain Corporation Grant Deeds dated March 27, 1984, from the

various Baldwin predecessors, as Grantors, to the State of California, acting through the State's Public Works Board, as Grantee, recorded May 14, 1984 as Documents No. 84-575903 through 84-575907, inclusive, of Official Records of Los Angeles County, California, a copy of Document No. 84-575903 being attached hereto as Exhibit B (those Corporation Grant Deeds being herein referred to collectively as the "Corporation Grant Deeds"), said Property Acquisition Agreements and Corporation Grant Deeds having reserved and created what are hereafter collectively referred to as the "Prior Easements," affecting that property located in the County of Los Angeles, State of California, as more particularly described on pages 10, 14 & 15of Exhibit A ; and

WHEREAS, said Prior Easements consist of three parts, as follows: "Part A," a strip of land 60 feet wide for street, road, utility and sewer purposes; "Part B," a strip of land 80 feet wide for utility, oil and gas operations, slope, drainage, sewer, water storage, reclamation and other such appropriate purposes, excepting from said 80 foot strip the 60 foot wide strip described in Part A; and "Part C," a strip of land 10 feet wide for oil and gas operations and other appropriate purposes; and

WHEREAS, PXP has installed a twelve inch (12") gas pipeline in the Southerly portion of Part B of the Prior Easements, as depicted on Drawing No. 4338-A-201, attached hereto as Exhibit "C"; and

WHEREAS, Chevron and COUNTY have entered into that certain Partial Surrender and Agreement dated April 10, 1984 and recorded July 11, 1984 as Document No. 84-823822 in Official Records of Los Angeles County, California, wherein COUNTY acknowledged the Prior Easements, wherein Chevron surrendered its right to use portions of the surface of the lands subject to the BC Lease, reserving unto itself certain additional easements, and wherein COUNTY agreed to assume certain

obligations with respect to the subject lands and the costs of relocating Chevron facilities; and

WHEREAS, COUNTY, as agent for the State of California, the owner of the real property subject to the above-referenced Prior Easements, proposes to construct a walking trail,and other improvements ("Improvements") that will be placed in the Prior Easements along the Kenneth Hahn State Park Area Ridgeline, more particularly described in those certain drawings provided to PXP on July 11, 2011 and prepared by COUNTY's consultant Nuvis Landscape Architecture and Planning, the current versions of which are attached hereto and incorporated herein as Exhibit "D"; and

WHEREAS, that portion of the Prior Easements to be jointly and non-exclusively occupied by COUNTY's Improvements is hereafter referred to as the "Area of Common Use."

NOW THEREFORE, for good and valuable consideration, the receipt and sufficiency of which each party hereby acknowledges, Baldwin, PXP and COUNTY agree as follows:

1. The above Recitals are true.

2. Baldwin and PXP consent to the construction, reconstruction, maintenance and use by COUNTY of the Improvements reflected and contained on Exhibit D hereto, but only those Improvements, and no others, along, upon and within the Prior Easements in the Area of Common Use, subject to the terms and conditions herein contained. Baldwin and PXP do not by this consent, and shall not be deemed by this Agreement, to subordinate or condition all or any portion of its or their rights in the Area of Common Use (including but not limited to the right to construct, reconstruct, maintain, or use one or more pipelines) to any use which COUNTY shall make of said Area. In the event Baldwin or PXP installs any additional or replacement pipelines in the Area of Common Use, said pipelines

shall be deemed to be installed and operated under the terms of the Prior Easements, and Baldwin's and PXP's rights with respect to same shall take precedence over any rights granted to the County pursuant to this Agreement. Without limiting the foregoing sentence, any such additional or replacement pipelines shall be subject to the provisions contained in this Agreement.

3. This Agreement shall not in any way alter, modify or terminate any provision of the Prior Easements. COUNTY shall use said Area of Common Use in such a manner so as not to interfere unreasonably with the rights of Baldwin and PXP, or either of them. Nothing herein contained shall be construed as a release or waiver of any claim for compensation or damages which Baldwin or PXP may now have or may hereafter acquire resulting from the construction, alteration or maintenance of any of COUNTY's Improvements.

4. COUNTY, and its employees, representatives, agents, and contractors shall comply with the following restrictions regarding change of grade: No permanent change in grade elevation will be allowed in the Area of Common Use that results in Part B of the easements in which the existing pipeline is located having less than three (3) feet of cover or in excess of a maximum of seven (7) feet of cover. Temporary grade changes that fall below the required three feet minimum cover will be allowed to accommodate construction or soil preparation, provided the structural integrity of the Pipeline is not compromised and Baldwin and PXP are notified 48 hours in advance of such excavations.

5. COUNTY, and its employees, representatives, agents, and contractors hereby insure and covenant to Baldwin and PXP that if the soil on Part A in the Area of Common Use (for road purposes) is excavated or graded in any manner in connection with COUNTY's installation or use of any of the Improvements, it

shall thereafter promptly be compacted to withstand vehicular traffic for vehicles weighing up to 50,000 lbs.

6. COUNTY, and its employees, representative, agents, and contractors hereby insure that no landscaping shall be placed in Part A of Common Use so as to interfere with or block pre-existing levels and types of vehicular traffic. In no event shall any trees or other obstructive plantings be placed in Part A of such Area. Baldwin and PXP agree that COUNTY may install such plants as it desires in the Area. However, in the event that Baldwin or PXP needs to excavate the ground in Part B of the Prior Easements to perform maintenance, repair, modification, or replacement of the existing pipeline, or to install new or additional pipelines or other facilities, Baldwin and/or PXP may remove COUNTY's plantings and landscaping within Part B and neither Baldwin nor PXP shall be required to restore or replace said removed or damaged plantings or landscaping, except that Baldwin and/or PXP shall return the Area to the same grade and slope as existed prior to the excavation. COUNTY shall bear the full cost of any replanting or other restoration of such affected areas as it may desire to perform, provided, however, that neither Baldwin nor PXP shall be liable to COUNTY for any damages to COUNTY's grading, plantings and landscaping.

7. COUNTY agrees that it will not install any hardscape, fence, fixtures, signs, benches, drinking fountains, railings, sculptures, parking facilities, exercise areas, structures, bathroom facilities, or permanent fixtures within the Area of Common Use.

8. In the event that the Improvements interfere with Baldwin's or PXP's use, operation or maintenance of its easements, pipeline or other facilities, COUNTY agrees to promptly remove the Improvements at its sole cost and expense.

9. In the event that the future use or alteration of the Area of Common Use by COUNTY herein permitted shall at any time or times necessitate the rearrangement, relocation or reconstruction of any of Baldwin's or PXP's facilities or the acquisition of additional property easements, or both, pursuant thereto, the same shall be performed by Baldwin and/or PXP, or by any other party with the consent of Baldwin and/or PXP, at the sole cost and expense of COUNTY, which expense shall be the actual cost of such work plus documented and reasonable fair-market compensation for general and administrative expenses incurred in connection therewith, not to exceed fifteen percent (15%) of the actual cost to compensate PXP and/or Baldwin for general and administrative expenses incurred in connection therewith. Except for work performed by a contractor or subcontractor regularly used by PXP for similar work on the adjacent oil field, any third-party contractor shall be approved by COUNTY, such approval not to be unreasonably withheld or delayed. If COUNTY does not object to the designated third-party contractor within ten (10) days of receipt of any written request to approve such third-party contractor, then such approval shall be deemed to have been given by COUNTY.

10. In the event that the future use or alteration of the Area of Common Use by Baldwin and/or PXP shall at any time or times necessitate a rearrangement, relocation or reconstruction of the COUNTY's Improvements in order for Baldwin and/or PXP to exercise any or all of its or their rights under the Prior Easements, the same shall be performed at the sole cost and expense of COUNTY. Except in exigent circumstances, PXP and/or Baldwin shall provide written notice to COUNTY of the rearrangement, relocation or reconstruction needed at least ten (10) days prior to the commencement of any such work, and COUNTY shall have the first opportunity to make or directly contract for such work. If COUNTY does not respond within ten

(10) days of its receipt of said written notice, then PXP and/or Baldwin may proceed with the work using its or their contractors, and COUNTY shall reimburse PXP and/or Baldwin for the actual cost and reasonable fair-market compensation for general and administrative expenses incurred in connection therewith, not to exceed fifteen percent (15%) of the actual cost to compensate PXP and/or Baldwin for general and administrative expenses incurred in connection therewith. COUNTY shall reimburse Baldwin and PXP for all such costs within thirty (30) days of receipt of invoice from Baldwin and/or PXP, whichever is applicable.

11. Baldwin and PXP, in their sole discretion, retain the right to review and approve prior to their installation the specific locations of all Improvements within the Prior Easements to avoid conflict with existing and future facilities of Baldwin and/or PXP. No such Improvements shall be installed without Baldwin's and PXP's prior written consent, such consent not to be unreasonably withheld or delayed.

12. At least five (5) business days prior to any construction within the Area of Common Use of the Prior Easements, COUNTY (including its contractor(s)or subcontractors) shall verify in writing to Baldwin and PXP the depth and location, via the potholing method, of all existing gas pipelines within the Area of Common Use. Said notice of verification shall be sent to the addresses listed above for the Parties.

13. COUNTY's Improvements consisting of pipelines, if any, shall be installed above or below PXP's pipelines with a minimum of one (1) foot vertical clearance.

14. Prior to any work within the Area of Common Use, COUNTY shall comply with all notification requirements in accordance with Government Code Section

4216, *et seq.* and, in addition, shall contact PXP's Superintendent of Operations, Jim Bowen, telephone number (323) 298-2274 and Baldwin's President, Jon Spanier, telephone number (914) 533-5373, at least forty-eight (48) hours in advance of any proposed work pursuant to this Agreement on the Prior Easements.

15. COUNTY (including its contractors and subcontractors) shall indemnify, defend (with counsel reasonably satisfactory to the indemnitee) and hold harmless Baldwin, PXP and Chevron, and each of them, and their respective officers, agents and employees, successors, and assigns, from and against any and all claims, expenses (including court costs and reasonable attorney's fees) demands, liabilities, losses, or causes of action of whatsoever nature or character, for injury, illness or death or loss of, damage to or destruction of property which arise out of this Agreement or the Improvements, excepting only those claims, demands, liabilities, losses, or causes of action arising from the act or omission of Baldwin, PXP or Chevron, or their respective officers, agents and employees on or after the date of this Agreement. In addition to the foregoing, COUNTY reaffirms its acceptance of the condition of the subject land and assumption of all responsibility for any conditions on or within the subject land, as provided in that certain Partial Surrender and Agreement dated April 10, 1984, recorded July 11, 1984 as Document No. 84-823822, Official Records of Los Angeles County. COUNTY further acknowledges the State of California's acceptance of the condition of the subject land pursuant to Paragraph 9 of each of the Property Acquisition Agreements. The provisions of this Paragraph 15 will survive any termination of this Agreement.

16. This Agreement and each covenant, term and condition contained herein, is intended to run with the

land and inure to the benefit of and be binding upon the successors and assigns of the Parties.

17. COUNTY shall keep the Prior Easements free from all liens, taxes and assessments levied or assessed resulting or caused by the COUNTY's Improvements, and COUNTY shall reimburse Baldwin and/or PXP for all sums necessarily paid by Baldwin and/or PXP to protect title to their Prior Easement against any such lien, tax or assessment.

18. COUNTY hereby recognizes the title and interest of Baldwin and PXP in and to the Prior Easements, and by such recognition agrees that it shall be estopped from assailing, resisting or otherwise challenging Baldwin or Chevron's or PXP's right, title or interest therein, for any cause, reason or event having arisen prior to the date of this Agreement, or at any time by any cause, reason or event resulting from the COUNTY'S exercise of the rights granted herein.

19. The Parties hereto, and each of them, shall comply with all state, federal and local laws and with the rules, regulations and orders of any federal, state or other governmental agency having jurisdiction over the lands subject to the Prior Easements with respect to each party's operations thereon, and if there be any conflict between the same and provisions of this Agreement, such laws, rules, regulations and orders shall modify or supersede, as the case may be, the relevant provisions of this Agreement.

20. Each Party hereby represents and warrants to the other Parties that the individual executing this Agreement on behalf of each Party is duly authorized to execute and deliver agreements on behalf of the respective Party and that the Agreement is binding upon each party in accordance with its terms; and

21. Nothing in this Agreement shall alter, modify or otherwise change the terms or respective obligations of Chevron or Baldwin under the BC Lease. Nothing in this Agreement shall alter, modify or otherwise change any of the terms of, or the respective obligations of any of the Parties to, the Property Acquisition Agreements.

22. The Operating Agreement has been extended to the 1st day of May, 2020 and was recorded on March 8, 2012 as Document No. 20120368017, Official Records of Los Angeles County, California.

23. This Agreement shall be governed by and construed in accordance with the laws of the State of California, excepting any choice of law rules that may direct application of laws of another jurisdiction.

24. This Agreement may be executed in multiple counterparts, each of which taken together shall constitute one agreement.

25. This Agreement is not intended to, nor shall it be construed to, create in, confer upon or give any person, other than the Parties and their respective successors and assigns, any claim, cause of action, remedy or right of any kind or nature.

IN WITNESS WHEREOF, the Parties have caused this Agreement to be executed in triplicate by their respective duly authorized officials as of the year and date first written above.

ATTACHMENT D

BALDWIN STOCKER, LLC

By_____
Jonathan G. Spanier
President

PLAINS EXPLORATION & PRODUCTION COMPANY

By: _____
James R. Rumsey
Vice President, Land Development

COUNTY OF LOS ANGELES, a body corporate and politic

By:_____
David Jan Takata
Senior Manager, CEO
Chief Executive Office

APPROVED AS TO FORM

_____
By_____
_____
Deputy County Counsel for the County of Los Angeles

ALL PURPOSE ACKNOWLEDGMENT

STATE OF CALIFORNIA }
}ss
COUNTY OF }

On _____, 20___ before me,
_____,a Notary Public,
personally appeared
_____, who proved to me on the basis of satisfactory evidence to be the person(s) whose name(s) is/are subscribed to the within instrument and acknowledged to me that he/she/they executed the same in his/her/their authorized capacity(ties), and that by his/her/their signature(s) on the instrument the person(s), or the entity upon behalf of which the person(s) acted, executed the instrument.

I certify under PENALTY OF PERJURY under the laws of the State of California that the foregoing paragraph is true and correct.

WITNESS my hand and official seal.

_____

ATTACHMENT D

ALL-PURPOSE ACKNOWLEDGMENT
STATE OF CALIFORNIA }
}ss
COUNTY OF }

On _____, 20___ before me,
_____,a Notary Public,
personally appeared
_____, who proved to me
on the basis of satisfactory evidence to be the
person(s) whose name(s) is/are subscribed to the within
instrument and acknowledged to me that he/she/they
executed the same in his/her/their authorized
capacity(ties), and that by his/her/their signature(s)
on the instrument the person(s), or the entity upon
behalf of which the person(s) acted, executed the
instrument.

I certify under PENALTY OF PERJURY under the laws of
the State of California that the foregoing paragraph is
true and correct.

WITNESS my hand and official seal.

_____

ATTACHMENT D

ALL-PURPOSE ACKNOWLEDGMENT
STATE OF CALIFORNIA }
}ss
COUNTY OF }

On _____, 20___ before me,
_____,a Notary Public,
personally appeared
_____, who proved to me
on the basis of satisfactory evidence to be the
person(s) whose name(s) is/are subscribed to the within
instrument and acknowledged to me that he/she/they
executed the same in his/her/their authorized
capacity(ties), and that by his/her/their signature(s)
on the instrument the person(s), or the entity upon
behalf of which the person(s) acted, executed the
instrument.

I certify under PENALTY OF PERJURY under the laws of
the State of California that the foregoing paragraph is
true and correct.

WITNESS my hand and official seal.

_____

ATTACHMENT E

ADDENDUM NO. 2 TO THE FINAL ENVIRONMENTAL IMPACT REPORT FOR THE KENNETH HAHN STATE RECREATION AREA GENERAL PLAN AMENDMENT

Addendum No. 2 to the Final Environmental Impact Report for the Kenneth Hahn State Recreation Area General Plan Amendment

Kenneth Hahn Eastern Ridgeline Project Phase 2
SCH No. 2001071101
Capital Project No. 69253

Prepared for

County of Los Angeles
Department of Public Works
900 South Fremont Avenue
Alhambra, California 91803

Prepared by

BonTerra Consulting
225 South Lake Boulevard, Suite 1000
Pasadena, California 91101
T: (626) 351-2000 F: (626) 351-2030

May 2012

TABLE OF CONTENTS

Section **Page**

Section 1.0 Introduction 1-1
1.1 Purpose and Scope of Addendum No. 2 1-2
1.2 Intended Uses of this Addendum No. 2 1-4
Section 2.0 Project Description 2-1
2.1 Project Title 2-1
2.2 Lead Agency 2-1
2.3 Contact Person 2-1
2.4 Project Sponsor 2-1
2.5 Project Location 2-1
2.6 Existing Conditions 2-1
2.6.1 Physical Environmental Setting 2-1
2.6.2 General Plan Designation and Zoning 2-2
2.7 Project Description 2-2
2.7.1 KHSRA General Plan Amendment Summary 2-3
2.7.2 Proposed Project Components 2-4
2.7.3 Construction Activities 2-6
2.7.4 Operation and Maintenance 2-6
2.7.5 Proposed Project and KHSRA General Plan Amendment Comparison 2-7
Section 3.0 Environmental Analysis 3-1
3.1 Aesthetics 3-2
3.2 Air Quality 3-5
3.3 Biological Resources 3-13
3.4 Cultural Resources 3-20
3.5 Geology and Soils 3-24
3.6 Greenhouse Gas Emissions 3-27
3.7 Hazards and Hazardous Materials 3-31
3.8 Hydrology and Water Quality 3-38
3.9 Land Use and Planning 3-42
3.10 Noise 3-44
3.11 Public Services 3-48
3.12 Recreation 3-51
3.13 Transportation/Traffic 3-52
3.14 Utilities and Service Systems 3-56
3.15 Environmental Analysis Conclusion 3-58

Section 4.0 References 4-1

Section 5.0 Document Preparers and Contributors 5-1

TABLES

Table **Page**

1 Criteria Pollutant Designations in the South Coast Air Basin 3-6
2 SCAQMD Air Quality Significance Thresholds 3-6
3 Estimated Maximum Daily Construction Emissions (Pounds/day) 3-8
4 Local Significance Threshold Construction Emissions 3-9
5 Peak Daily Operational Emissions 3-10
6 Existing Vegetation Types and Impact Areas 3-14
7 Summary of Lower Ridge Soil Sample Analyses 3-32

FIGURES

Figure **Follows Page**

1 Regional Location and Local Vicinity 2-1
2 Aerial Photograph 2-1
3 Proposed Eastern Ridgeline Trail Project Phase 2 Site Plan 2-4
4 Proposed Grading Plan 2-4
5 Grading and Construction Details 2-5
6 Proposed Fence and Gate Details 2-5
7 Proposed Planting Plan 2-5
8 Existing Vegetation and Project Impact Areas 3-13
9 Supplemental Site Investigation Soil Boring Locations 3-32

APPENDICES

A Air Quality and Greenhouse Gas Model Data
B Supplemental Site Investigation Technical Memorandum

SECTION 1.0 INTRODUCTION

The Kenneth Hahn State Recreation Area (KHSRA) encompasses approximately 387 acres of public parkland located at 4100 South La Cienega Boulevard in the Baldwin Hills community of the unincorporated County of Los Angeles (County), south of Interstate (I) 10 (Santa Monica Freeway) and east of I-405 (San Diego Freeway). The KHSRA is owned by the California Department of Parks and Recreation (DPR) and is managed by the County of Los Angeles Department of Parks and Recreation (LACDPR).

As part of the California Environmental Quality Act (CEQA) process, the DPR prepared and circulated the *Draft KHSRA General Plan Amendment and Environmental Impact Report* (EIR) for public review in September 2001. In response to the comments received on the Draft EIR and to DPR planning guidelines issued in January 2002, the DPR prepared the *Recirculated Draft KHSRA General Plan Amendment and EIR*, which was submitted for public review in June 2002 (DPR 2002). The *KHSRA General Plan Amendment and Final EIR* (Final EIR) (State Clearinghouse No. 2000071101) was certified by the California State Park & Recreation Commission on October 12, 2002, as adequately addressing the potential environmental impacts associated with implementation of the KHSRA General Plan Amendment (DPR Commission 2002). The Final EIR documented that there would be no significant and unavoidable environmental impacts with development under the KHSRA General Plan Amendment with implementation of the mitigation measures adopted as part of the Final EIR.

This CEQA document assesses the environmental impacts of planned elements of the KHSRA General Plan. The Eastern Ridgeline Trail is an existing, approximately 3,500-foot (0.7-mile) walking trail that traverses the southeastern edge of the KHSRA. The existing trail is minimally developed; does not have additional amenities for public use; and is not compliant with the Americans with Disabilities Act (ADA). As part of planned improvements to the Eastern Ridgeline Trail, the County of Los Angeles Chief Executive Office directed the preparation of *Revised Addendum to the Environmental Impact Report for the Kenneth Hahn Eastern Ridgeline Project* (dated June 2010; herein referred to as “Addendum No. 1” for clarity) to complete the application for grant funds from the Baldwin Hills Conservancy authorized under Proposition 40 and to implement the Kenneth Hahn Eastern Ridgeline Project (herein referred to as “Phase 1”) to create a family-friendly recreation area that would provide an improved walking trail and new fitness zones, concrete animal structures, benches, and trash receptacles within an approximate 2,540-foot, north-south trending, linear area along the eastern boundary of the southernmost portion of the KHSRA (Sapphos Environmental Inc. 2010). The Phase 1 project encompassed the majority, but not the entirety, of the existing Eastern Ridgeline Trail. The Addendum No. 1 was adopted by the County of Los Angeles Board of Supervisors (BOS) on September 21, 2010 (County CEO 2010).

The proposed Project, the Kenneth Hahn Eastern Ridgeline Project Phase 2 (Project/Phase 2 Project), was proposed by the County of Los Angeles (County), in conjunction with the Baldwin Hills Conservancy. The Phase 2 Project would extend from the southern terminus of the trail alignment addressed in Addendum No. 1 to the curb at the northeast corner of the La Brea Avenue/Stocker Street intersection, and, in combination with Phase 1, would include the entire Eastern Ridgeline Trail alignment. The Phase 2 Project would (1) reconfigure an approximate 960-linear-foot portion of the Eastern Ridgeline Trail to provide an improved, ADA-compliant walking trail and upgrade the existing fencing and entry gate along the eastern and southern perimeter of the site within the KHSRA and (2) to implement minor improvements within the intersection of La Brea Avenue and Stocker Street (under City of Los Angeles jurisdiction) to improve pedestrian accessibility and wayfinding across La Brea Avenue to the KHSRA Eastern Ridgeline Trail.

1.1 PURPOSE AND SCOPE OF ADDENDUM NO. 2

This Addendum No. 2 was prepared in accordance with the provisions of the California Environmental Quality Act (CEQA) (Sections 21000, et seq. of the *California Public Resources Code*) and the State CEQA Guidelines (Title 14 *California Code of Regulations* Sections 15000, et seq.) in support of the proposed Kenneth Hahn Eastern Ridgeline Project Phase 2.

Section 15164(a) of the CEQA Guidelines states that "The lead agency or responsible agency shall prepare an addendum to a previously certified EIR if some changes or additions are necessary but none of the conditions described in Section 15162 calling for preparation of a subsequent EIR have occurred". Pursuant to Section 15162(a) of the CEQA Guidelines, a subsequent EIR or Negative Declaration is only required when the lead agency determines, on the basis of substantial evidence in light of the whole record, one or more of the following:

(1) Substantial changes are proposed in the project which will require major revisions of the previous EIR or negative declaration due to the involvement of new significant environmental effects or a substantial increase in the severity of previously identified significant effects;

(2) Substantial changes occur with respect to the circumstances under which the project is undertaken which will require major revisions of the previous EIR or Negative Declaration due to the involvement of new significant environmental effects or a substantial increase in the severity of previously identified significant effects; or

(3) New information of substantial importance, which was not known and could not have been known with the exercise of reasonable diligence at the time the previous EIR was certified as complete or the Negative Declaration was adopted, shows any of the following:

   (A) The project will have one or more significant effects not discussed in the previous EIR or negative declaration;

   (B) Significant effects previously examined will be substantially more severe than shown in the previous EIR;

   (C) Mitigation measures or alternatives previously found not to be feasible would in fact be feasible, and would substantially reduce one or more significant effects of the project, but the project proponents decline to adopt the mitigation measure or alternative; or

   (D) Mitigation measures or alternatives which are considerably different from those analyzed in the previous EIR would substantially reduce one or more significant effects on the environment, but the project proponents decline to adopt the mitigation measure or alternative.

As discussed above, the Phase 1 Eastern Ridgeline project addressed in Addendum No. 1 is adjacent to the proposed Phase 2 Project. Also, as discussed above, the Phase 1 project included substantially more intensive site development, both in geographic extent and types of project components, than proposed in the Phase 2 Project. For these reasons, both the program-level analysis of KHSRA-wide development in the 2002 Final EIR and the subsequent, project-level (i.e., more detailed) analysis of the adjacent Phase 1 trail project in the 2010 Addendum No. 1 are utilized in assessing the potential environmental impacts of the proposed Phase 2 Project. The purpose of this Addendum No. 2 is to provide the County with the factual

basis for determining whether any Project changes, any changes in circumstances, or any new information since the Final EIR was certified in October 2002 or Addendum No. 1 was adopted on September 2010 require additional environmental review or preparation of a subsequent or supplemental EIR.

As analyzed in detail herein, there would be no new significant environmental impacts, nor any substantial increase in the severity of previously identified impacts, resulting from construction and operation of the proposed Project. Both the Final EIR and Addendum No. 1 determined that there would be no significant and unavoidable impacts through implementation of their respective scopes of development with implementation of identified mitigation measures. As illustrated by the analysis presented in Section 3.0, the impacts anticipated with implementation of the proposed Phase 2 Project are within the scope of impacts assessed in the Final EIR and Addendum No. 1. Specifically, the impacts associated with the proposed Project would either be the same or less than the anticipated impacts identified in the Final EIR and Addendum No. 1 with implementation of adopted mitigation measures and the refined Project-specific mitigation measures identified for biological resources and hazardous materials in this Addendum No. 2. It is noted that the Project-specific mitigation measures are refinements to the Final EIR mitigation measures and are not required to address any new significant environmental impacts that were not anticipated and addressed in the Final EIR. Rather, the Project-specific mitigation measures identified herein are refinements of the program-level mitigation measures adopted in the Final EIR that provide a higher level of detail and/or specificity to reflect the current Project and the site conditions. The refined measures are within the scope of the previously adopted measures. Therefore, in accordance with Section 15164 of the CEQA Guidelines, this Addendum No. 2 to the previously certified Final EIR is the appropriate environmental documentation to support implementation of the proposed Phase 2 Project. In taking action on any of approvals associated with implementation of the proposed Project, listed below in Section 1.2, Intended Uses of this Addendum No. 2, the County shall consider the whole of the data presented in the Final EIR, in Addendum No. 1, and in this Addendum No. 2.

Section 2.0, Project Description, describes the location and existing physical conditions of the Project site, and the proposed Kenneth Hahn Eastern Ridgeline Project Phase 2 being addressed in this Addendum No. 2. Section 3.0 presents the environmental analysis of the proposed Project. Appendix A, Air Quality and Greenhouse Gas Model Data, provides the California Emissions Estimator Model (CalEEMod) data sheets from air quality and greenhouse gas emissions modeling performed as part of this Addendum No. 2; and Appendix B, Supplemental Site Investigation Technical Memorandum, provides the results of the site investigation performed by URS Corporation, Inc. in coordination with the California Department of Toxic Substances Control.

Based on the analysis presented in this Addendum No. 2, pursuant to Section 15162 of the CEQA Guidelines, the County has determined, on the basis of substantial evidence in the light of the whole record, that the proposed Project does not propose substantial changes to the anticipated development of the park described in the KHSRA General Plan Amendment and Final EIR and Addendum No. 1; no substantial changes would occur which would require major revisions to the Final EIR and Addendum No. 1; and no new information of substantial importance has been revealed since the certification of the Final EIR and Addendum No. 1.

1.2 INTENDED USES OF THIS ADDENDUM NO. 2

This Addendum No. 2, when considered in conjunction with the KHSRA General Plan Amendment and Final EIR and Addendum No. 1, is intended to provide the necessary CEQA analysis for the following actions:

- Approval of the Kenneth Hahn Eastern Ridgeline Project Phase 2 (as described herein) and
- Adoption of this Addendum No. 2 to the KHSRA General Plan Amendment and Final EIR (certified October 2002).

SECTION 2.0 PROJECT DESCRIPTION

2.1 PROJECT TITLE

Kenneth Hahn Eastern Ridgeline Project Phase 2

2.2 LEAD AGENCY

County of Los Angeles
900 South Fremont Avenue
Alhambra, California 91803

2.3 CONTACT PERSON

Mr. Shirish Desai, AIA, LEED AP
Project Manager, Project Management Division II
County of Los Angeles
Department of Public Works
900 South Fremont Avenue
Alhambra, California 91803
Phone: (626) 300-3237

2.4 PROJECT SPONSOR

Same as Lead Agency (Section 2.2 above)

2.5 PROJECT LOCATION

The proposed Kenneth Hahn Eastern Ridgeline Project Phase 2 site is located adjacent to and within the southeastern portion of the larger, 387-acre KHSRA, which is located at 4100 South La Cienega Boulevard in the Baldwin Hills community of the unincorporated County. Specifically, the Project site is located at the intersection of La Brea Avenue and Stocker Street, approximately 2.5 miles south of I-10 and east of I-405. In addition to the Project components located within the KHSRA in the northwest corner of the intersection, the proposed Project would include modifications to the north side of the intersection to improve pedestrian accessibility and safety while crossing La Brea Avenue. The proposed Project's regional location and local vicinity are depicted in Figure 1.

2.6 EXISTING CONDITIONS

2.6.1 PHYSICAL ENVIRONMENTAL SETTING

As shown on the aerial photograph of the Project area presented in Figure 2, the majority of the Project site is within the KHSRA and is comprised primarily of undeveloped open space and a an existing, approximately 960-linear foot, dirt walking trail traversing from the intersection of La Brea Avenue and Stocker Street generally northwest to the top of the Eastern Ridgeline. The existing trail has a slope of approximately 9 to 10 percent, and is cut into the hillside. There is an existing chain-link fence installed near the western, southern, and eastern boundaries of the site within the KHSRA. The locations of the proposed pedestrian accessibility improvements, located off site and within the City of Los Angeles, include (1) the existing pedestrian refuge island located immediately southeast of the intersection and (2) the sidewalk at the northeast corner of the intersection. These areas outside the KHSRA are largely comprised of concrete or asphalt pavement with some turf and other ruderal vegetation within the southern toe of the Norman O. Houston Park.

Regional Location and Local Vicinity

Figure 1

Kenneth Hahn Eastern Ridgeline Project Phase 2

N W E S

2,000 1,000 0 2,000 Feet

BonTerra CONSULTING

(Rev: 2-13-2012 JCD) Projects\CoLADPW\J168\Graphics\EIR_Addendum\Fig1_LV_RL.pdf

D:\Projects\CoLADPW\J168\MXD\lex_LV_RL.mxd

Source: Aerials Express 2009

D:\Projects\CoLADPW\J168\MXD\ex_aerial.mxd

Aerial Photograph

Figure 2

Kenneth Hahn Eastern Ridgeline Project Phase 2

N W E S

150 75 0 150 Feet

BonTerra CONSULTING

(Rev: 2-13-2012 JCD) Projects\CoLADPW\J168\Graphics\EIR_Addendum\Fig2_aerial.pdf

The elevation at the La Brea Avenue/Stocker Street intersection is approximately 435 feet above mean sea level (msl), and elevations of the Project site within the KHSRA range from approximately 435 feet above msl to 475 feet above msl at the approximate top of the ridgeline. The KHSRA project area slopes down from the ridgeline to the east and southeast. Vegetation types located on the KHSRA portion of the site include disturbed California sagebrush scrub, ornamental, and ruderal (i.e., weedy and disturbed). Other areas on the Project site are bare ground (trails) and developed areas (sidewalks adjacent to the KHSRA) that lack vegetation. There are no sensitive plant or wildlife species present within the Project site, and no jurisdictional drainages traverse the site.

A portion of the active Inglewood Oil Field is located immediately to the west of the Project site within the KHSRA. The communities of Ladera Heights and View Park-Windsor Hills are located to the southwest and southeast, respectively, of the Project site and the City of Culver City is located to the north of the KHSRA. Sensitive land uses, or sensitive receptors, in the Project vicinity include the Norman O. Houston Park, located approximately 150 feet to the east of the KHSRA across La Brea Avenue, and Ruben Ingold Park, located further to the east. The Windsor Hills Math-Science-Aerospace Magnet School is located approximately 0.1 mile southeast of the site across the La Brea Avenue/Stocker Street intersection, and the nearest residences are located immediately east of this school on Mt. Vernon Drive. The KHSRA itself, as a public recreation facility, is generally considered a sensitive receptor. However, based on the Project site's location along the southernmost "finger" of the KHSRA, the only portion of the KHSRA proximate to the site is the unimproved trail comprising the Phase 1 portion of the Eastern Ridgeline, and extending north from the terminus of the proposed Project.

2.6.2 GENERAL PLAN DESIGNATION AND ZONING

The KHSRA portion of Project site has been designated Open Space (O) by the County of Los Angeles. The County General Plan defines the Open Space designation as including …"both public and privately owned lands committed to long term open space use, and lands intended to be used in a manner compatible with open space objectives" (LACDRP 1980). Regional parks, such as the KHSRA, are among the major open space areas delineated on the County's adopted General Plan *Land Use Policy Map*. It is noted that in the 2011 Draft County of Los Angeles General Plan Update, which has not been adopted, the KHSRA project site is proposed to be designated Parks and Recreation (OS-PR) (LACDRP 2011). This designation would be consistent with the current Open Space designation.

The KHSRA portion of Project site is zoned A-2 (Heavy Agricultural) by the County of Los Angeles Planning and Zoning Ordinance (Title 22 of the County Code). The A-2 zone allows a diverse range of permitted uses, including "Parks, playgrounds and beaches, with all appurtenant facilities customarily found in conjunction therewith" (Section 22.24.120 of the County Code).

The off-site portion of the Project site (the proposed pedestrian accessibility improvements) is within public right-of-way of both La Brea Avenue and Stocker Street and under City of Los Angeles jurisdiction.

2.7 PROJECT DESCRIPTION

The proposed Kenneth Hahn Eastern Ridgeline Project Phase 2 would involve grading and realigning an approximate 960-linear-foot portion of the existing approximately 3,500-linear-foot Eastern Ridgeline trail and minor off-site improvements within the La Brea Avenue and Stocker Street intersection to improve connectivity of the trail to, and through, this intersection. The Project site is mostly within the KHSRA and is proposed as part of development under the KHSRA General Plan Amendment, summarized below.

2.7.1 KHSRA GENERAL PLAN AMENDMENT SUMMARY

Approved in 2002, the KHSRA General Plan Amendment encompasses a total of 387 acres, including the 319 acres of the then-existing Kenneth Hahn State Recreation Area; the 50 acre State-owned Vista Pacifica Scenic Site; and 2 small, County-owned parcels occupying 18 acres total that are adjacent to the Vista Pacifica Scenic Site. The extent of the KHSRA covered in the General Plan Amendment is depicted in Figure 1. The purpose of the KHSRA General Plan Amendment is to serve as a guide for future natural open space and parkland improvements; facility development and habitat restoration within the KHSRA; and for connections to trails, parks and other public facilities.

The 2002 KHSRA General Plan Amendment establishes Management Zones, which are specific geographic areas for which management directions or prescriptions have been defined regarding resource management, visitor use, access, facilities or development, and operations, based on evaluation of the KHSRA's natural, cultural, and recreational features. In addition, the General Plan Amendment defines goals and guidelines as follows:

- ***Unit-wide Management Goals and Guidelines.*** A consistent set of goals and guidelines to be applied to on-going, KHSRA-wide maintenance and operations as well as new facility development throughout the KHSRA. This includes the goal to restore existing dilapidated resource areas to healthy ecosystems.
- ***Specific Area Goals and Guidelines.*** Goals and guidelines to be applied to on-going KHSRA maintenance and operations as well as new facility development within specific portions of the KHSRA. This includes improving surface water quality emanating from the site by means of catchment basins or other methods, to collect, retain, and treat runoff.

The Management Zones for the KHSRA fall into two general categories: the (1) Resource Protection and (2) Beneficial Use. The KHSRA portion of the proposed Project is within a Resource Protection Management Zone, discussed further below.

- ***The Resource Protection Management Zone*** allows for a low to high range of visitor use and low to moderate range of facility development. Resource Protection Management Zone-designated areas are managed to preserve and protect sensitive plant and animal species and their supporting habitats, and to protect the movement of plants and animals within the KHSRA. Resource protection is the foremost consideration, and these areas are managed with low tolerance for resource degradation from visitor use. Visitor experience is to be primarily based on hiking, walking, or nature study characterized by light to moderate use focused on marked and maintained trails, with some management presence to accommodate resource protection and visitor use. These areas provide substantial opportunities for scientific study of natural processes in undisturbed conditions.

The Project site is also within the Five Points and Trails Connection Management Area and the Eastern Ridgeline Management Area, two of the specific areas defined for focused management "areas" in the General Plan Amendment, and discussed further below. The Five Points intersection refers to the confluence of La Brea Avenue, Stocker Street, and Overhill Drive.

- ***The Five Points and Trails Connection Management Area*** provides access to trails in the Ridgeline Management Area and potential connections to bicycle trails, footpaths, pedestrian walkways and other local parks. These include the Stocker Street Trail; pedestrian walkways along La Brea Avenue and Overhill Drive; Norman O. Houston Park; and Jim Gilliam Park.

- ***The Eastern Ridgeline Management Area*** consists of the eastern ridgeline and canyons on both sides of the ridgeline, and is bordered by La Brea Avenue, the neighborhoods of Baldwin Hills and Baldwin Vista, and Five Points. This area is managed to protect natural habitat, scenic views, and appropriate public access and to provide necessary buffers between visitor-serving uses and surrounding neighborhoods. Protection of wildlife, including breeding, nesting and feeding areas is the highest priority. Location of trailheads, footpaths, service roads and any other necessary facilities are required to be designed to avoid sensitive plant and wildlife areas; maximize views from the ridgeline; and provide trail loop alternatives. Landscaping in the natural habitat areas must be with Southern California native plant species. Irrigation must be designed to protect native habitat and will be used only where necessary for restoration efforts for picnic areas, and where runoff does not impact natural habitat areas.

2.7.2 PROPOSED PROJECT COMPONENTS

The proposed Project includes both on-site and off-site components: (1) reconfiguring an approximate 960-linear foot portion of the Eastern Ridgeline Trail to provide an improved and ADA-compliant walking trail and upgrade the fencing and entry gate along the eastern and southern boundaries of the KHSRA and (2) to implement minor improvements within the intersection of La Brea Avenue and Stocker Street (under City of Los Angeles jurisdiction) to improve pedestrian accessibility and wayfinding across La Brea Avenue to the KHSRA Eastern Ridgeline Trail. The Phase 2 Project would extend from the southern terminus of the trail alignment addressed in Addendum No. 1 to the curb at the northeast corner of the La Brea Avenue/Stocker Street intersection, and, in combination with Phase 1, would include the entire Eastern Ridgeline Trail alignment.

On-Site Project Components

The proposed Project site plan, presented in Figure 3, illustrates a trail alignment that is similar to the existing trail alignment on the site and encompasses an approximate 0.2-acre linear area, including a 960-foot portion of the 3,500-foot Eastern Ridgeline Trail. Figure 4 present the proposed Project grading plan, and Figure 5 presents grading and construction details. The proposed trail is designed in accordance with the ADA trail accessibility standards described in Section 1017, Trails of the US Access Board, which has been incorporated into the standards of the *2009 California State Parks Accessibility Guidelines*, rather than Section 1132B2.6 – Trails and Paths of the California Building Code (Civil Works Engineers 2012); this determination of the applicable access requirements for the proposed Project has been approved by the LACDPW's Building and Safety division (Desai 2012). The application of the *2009 California State Parks Accessibility Guidelines* substantially reduces the extent of vegetation removal and grading and reduces construction and maintenance costs. Specifically, based on the existing site topography, construction of the Phase 2 Project to meet current building code standards (i.e., Section 1132B2.6) would require more extensive grading for multiple switchbacks and for both cut and fill slopes. Under the Section 1017 of the *2009 California State Parks Accessibility Guidelines* standards, switchbacks would not be required and the grading (cut and fill) necessary to meet maximum slope standards would also be reduced (Civil Works Engineers 2012). All other as aspects of the proposed Project would be constructed in compliance with the 2010 California Building Code. The details of the proposed trail design are described further below.

The proposed trail would be approximately 10 feet wide, with the exception of the existing, 20-foot-wide access drive/turn-around area (discussed further below), and would be comprised of an approximate 6-inch-thick layer of stabilized decomposed granite (DG) or an equivalent, alternate aggregate surface material, over an approximate 8- to 12-inch-thick layer of aggregate

CONSTRUCTION LEGEND

1. STABILIZED DECOMPOSED GRANITE (PEDESTRIAN) - REFER TO DETAIL 'A', SHEET L-05
2. 42" HIGH, 2 RAIL CONTROL FENCE - REFER TO DETAIL 'C', SHEET L-05
3. BENCH - REFER TO SITE AMENITY LIST
4. TRASH RECEPTACLE - REFER TO SITE AMENITY LIST
5. ANIMAL SCULPTURE - REFER TO DETAILS 'F', 'G', & 'H'. SHEET L-05
6. FITNESS AREA A - REFER TO DETAIL 'A'. SHEET L-07
7. FITNESS AREA B - REFER TO DETAIL 'B'. SHEET L-07
8. FITNESS AREA C - REFER TO DETAIL 'C'. SHEET L-07
9. FITNESS AREA D - REFER TO DETAIL 'D'. SHEET L-07
10. REFER TO CIVIL PLANS FOR ADA PATH OF TRAVEL PLAN
11. EXISTING PARKING - REFER TO CIVIL PLAN
12. EXISTING BENCH SHALL REMOVED AND SALVAGED - REFER TO NOTES
13. EXISTING DECOMPOSED GRANITE PATH SHALL REMAIN & BE PROTECTED
14. EXISTING FENCE SHALL REMAIN & BE PROTECTED
15. EXISTING TREE SHALL REMAIN & BE PROTECTED
16. EXISTING TOT-LOT SHALL REMAIN & BE PROTECTED
17. EXISTING TRAIL SHALL REMAIN & BE PROTECTED
18. EXISTING TRAIL SHALL BE RE-GRADED WHERE NOTED PER CIVIL PLANS
19. DRINKING FOUNTAIN - REFER TO SITE AMENITY LIST
20. EXISTING IRRIGATION EQUIPMENT SHALL REMAIN & BE PROTECTED
21. EXISTING ASPHALT ROAD SHALL REMAIN & BE PROTECTED
22. UNLESS OTHERWISE NOTED, EXISTING TURF SHALL REMAIN & BE PROTECTED
23. HEADERBOARD - REFER TO DETAIL 'G', SHEET L-08
24. PARK DIRECTIONAL / INFORMATIONAL SIGN - REFER TO DETAIL 'C', SHT L-06
25. MILE MARKER - REFER TO DETAIL 'B', SHEET L-06
26. 42" HIGH, 3 RAIL CONTROL FENCE - REFER TO DETAIL 'D', SHEET L-05
27. STABILIZED DECOMPOSED GRANITE (VEHICULAR) - REFER TO DETAIL 'A', SHEET L-05. REFER TO CIVIL PLANS FOR ADDITIONAL TRAIL LAYOUT INFO.
28. EXISTING IRRIGATION CONTROLLER & ELECTRICAL ENCLOSURE SHALL REMAIN & BE PROTECTED
29. EXISTING FIRE HYDRANT SHALL REMAIN & BE PROTECTED
30. EXISTING TREES SHALL BE REMOVED. UNLESS OTHERWISE NOTED, ALL EXISTING TREES SHALL REMAIN & BE PROTECTED
31. PILASTER - REFER TO DETAIL 'A', SHEET L-08
32. DOUBLE WIDE GATE - REFER TO DETAIL 'B', SHEET L-08
33. EXISTING STREET LIGHTS SHALL REMAIN & BE PROTECTED
34. PILASTER - REFER TO DETAIL 'C', SHEET L-08
35. EXISTING SIGN AND GUY WIRES SHALL REMAIN & BE PROTECTED
36. UNLESS OTHERWISE NOTED EXISTING BRUSH SHALL REMAIN & BE PROTECTED
37. EXISTING OIL WELL SHALL REMAIN & BE PROTECTED

SYMBOL LEGEND

B	BENCH
DF	DRINKING FOUNTAIN
T	TRASH RECEPTACLE
	EXISTING CHAINLINK FENCE
	PROPERTY LINE
x 3335	EXISTING SPOT ELEVATION
3332	EXISTING CONTOUR LINES
	EXISTING PATH / ROAD
	EXISTING LIGHT
V	WATER VALVE
M	WATER METER
	EXISTING TREE
	EXISTING BRUSH

SITE AMENITY LIST

1. BENCH - BELSON BENCH MODEL NO. PB6-6GR24, WITH SAND COLORED PLANKS & BLACK COLORED FRAME. AVAILABLE FROM BELSON, 1-800-323-5664 OR AN APPROVED EQUAL.
2. TRASH RECEPTACLE - BELSON TRASH RECEPTACLE MODEL NO. SR3 WITH SAND COLORED SLATS & BLACK COLORED FRAME. REFER TO NOTE NO. 1 ABOVE FOR AVAILABILITY. REFER TO DETAIL 'A', SHEET L-05
3. DRINKING FOUNTAIN - MDF MODEL 440SM W/ AN ATTACHED PET FOUNTAIN, RAL # 6005 COLOR, SURFACE MOUNT. AVAILABLE FROM MOST DEPENDABLE FOUNTAIN, 1-800-552-6331, OR AN APPROVED EQUAL. REFER TO DETAIL 'E', SHEET L-05
4. SCULPTURE - REFER TO DETAILS HEREIN. AVAILABLE FROM CEMROCK LANDSCAPE, INC. 520-571-1999, OR AN APPROVED EQUAL
5. FITNESS EQUIPMENT - GREENFIELDS OUTDOOR FITNESS. AVAILABLE FROM MIRACLE PLAYGROUND, 1-800-264-7225 OR AN APPROVED EQUAL

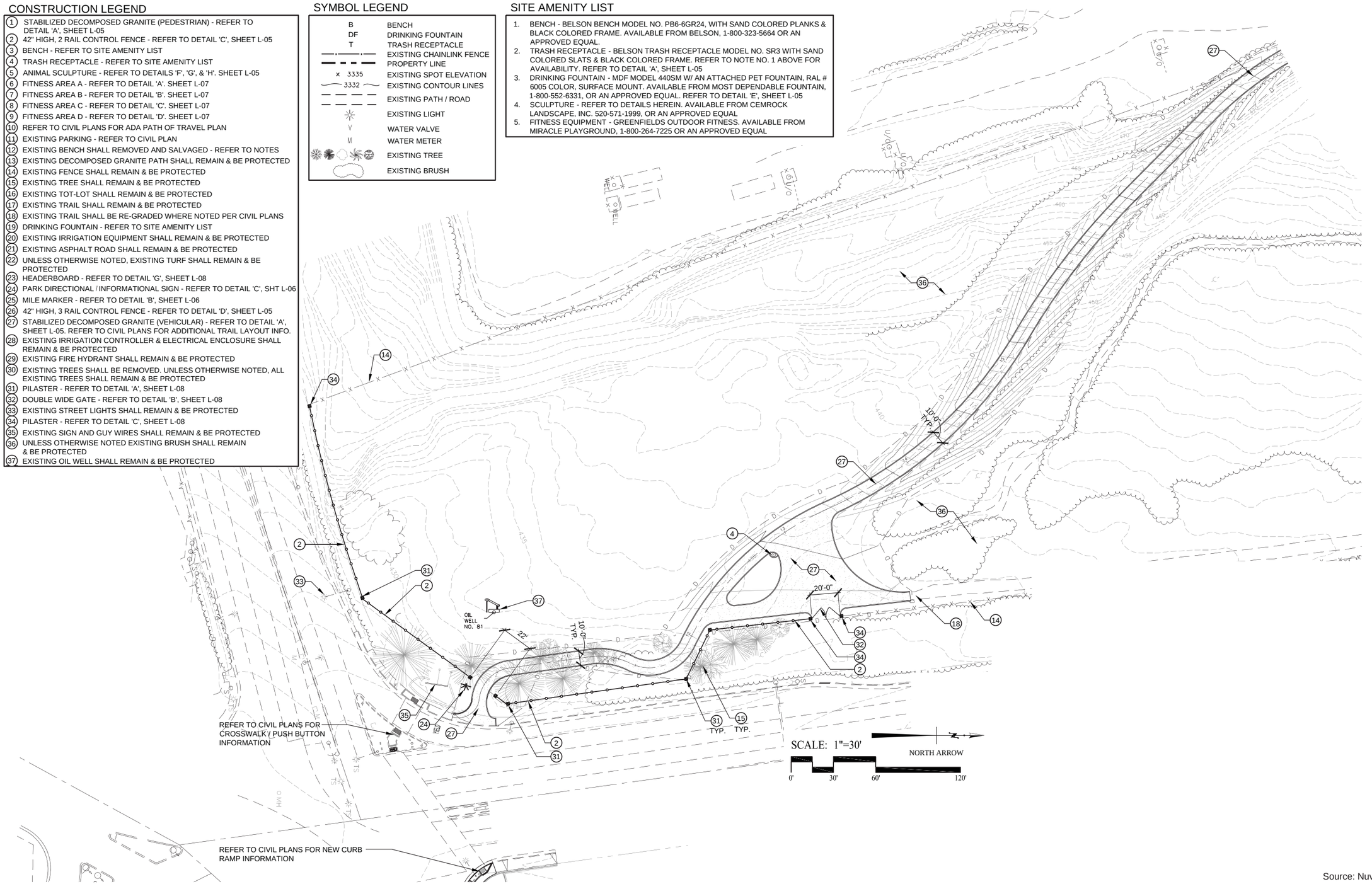

Source: Nuvis 2011

Proposed Eastern Ridgeline Trail Project Phase 2 Site Plan

Figure 3

Kenneth Hahn Eastern Ridgeline Project Phase 2

BonTerra CONSULTING

(2-13-12 JCD) Projects\CoLADPW\J168\Graphics\EIR_Addendum\Fig3_proposedtrail_phase2.pdf

D:\Projects\CoLADPW\J168\Graphics\ex_proposedtrail_phase2.ai

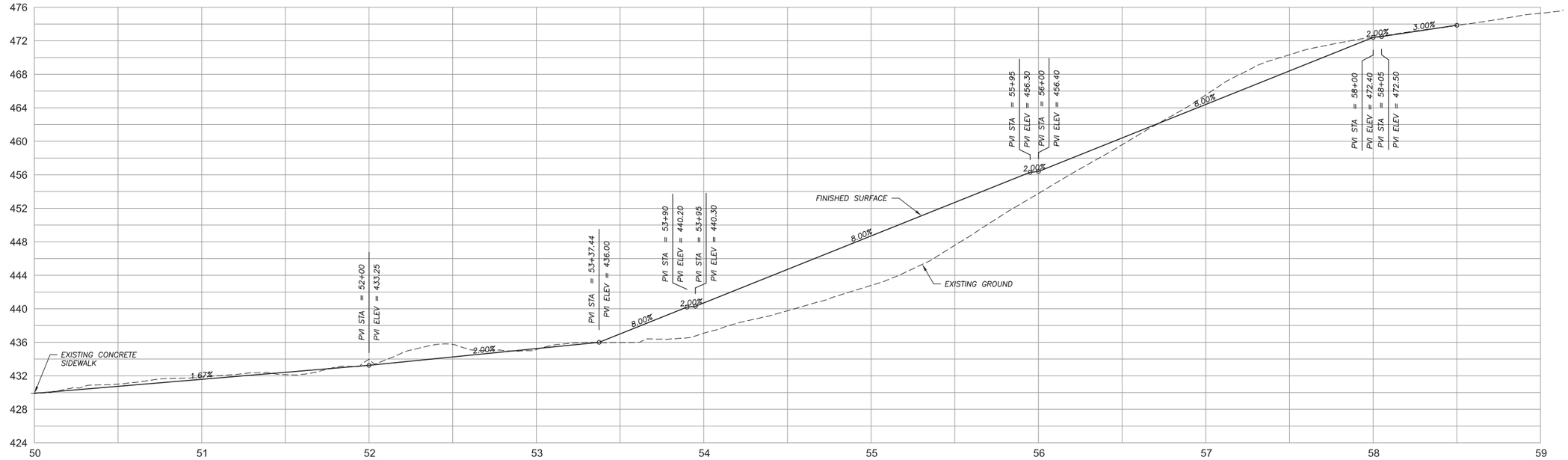

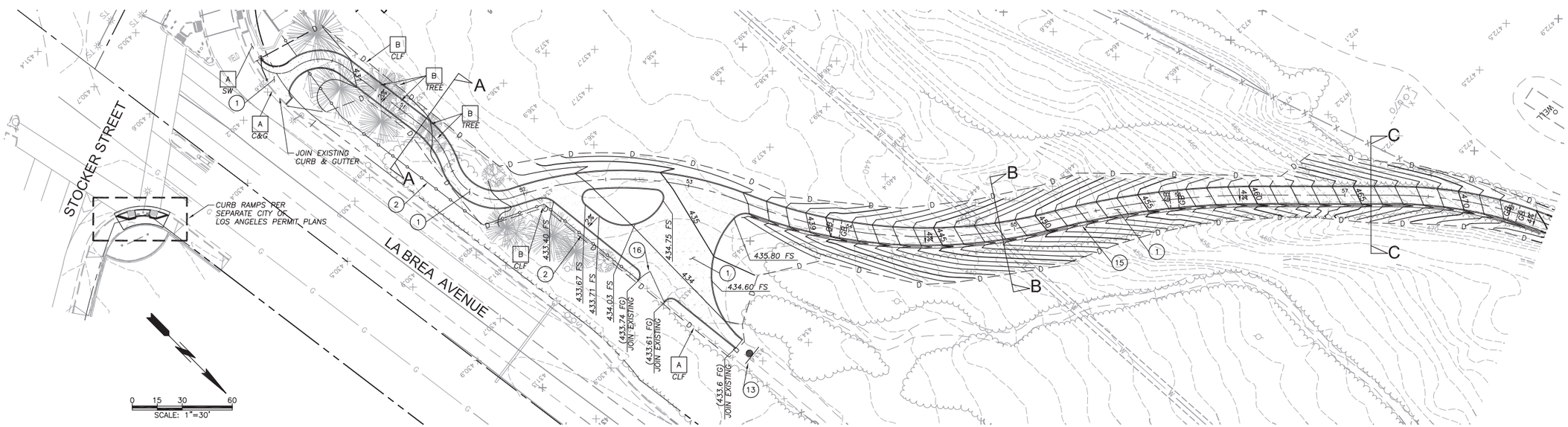

GENERAL NOTES

1. SEE SHEET C3.6 FOR TYPICAL SECTIONS

DISPOSITION NOTES

- A — PROTECT-IN-PLACE (ITEM AS NOTED)
- B — REMOVE (ITEM AS NOTED)

CONSTRUCTION NOTES

- 1 — CONSTRUCT PATHWAY PER CONSTRUCTION PLANS
- 2 — CONSTRUCT FENCE PER CONSTRUCTION PLANS
- 15 — CONSTRUCT PCC GUTTER PER DETAIL 1, SHEET C3.6
- 16 — ENTRANCE GATE PER CONSTRUCTION PLANS

Source: Civil Works Engineers, Inc. 2011

Proposed Grading Plan

Figure 4

Kenneth Hahn Eastern Ridgeline Project Phase 2

BonTerra CONSULTING

(2-13-12 JCD) Projects\CoLADPW\J168\Graphics\Fig4_proposed_grading.pdf

D:\Projects\CoLADPW\J168\Graphics\ex_proposed_grading.ai

base. The trail would be constructed with an ADA-compliant cross slope towards an 8- to 12-inch-deep, unpaved/natural drainage ditch. As shown in Figure 5, the drainage ditch would be located adjacent to the path of the trail. The proposed trail gateway would be located immediately to the east of the existing curb ramp, crosswalk, and KHSRA sign in the northeast corner of the La Brea Avenue/Stocker Street intersection, all of which would remain and be protected in place during Project implementation. As shown on Figure 4, the proposed trail would continue from the trail gateway at a nearly flat grade, generally towards the north through existing trees and other vegetation. This portion of the trail represents a new trail alignment, as it does not follow the existing trail alignment, and the trail path has been selected to minimize impacts to native trees (Alta 2011). Tree and vegetation removal and planting is discussed further below. The trail would widen gradually up to 20 feet at the location of the existing access drive and emergency vehicle turn-around at the location of the existing double chain link gate off La Brea Avenue. The trail would then narrow to 10 feet wide and continue for approximately 360 feet, generally following the alignment of the existing trail, with a slope of approximately 8.33 percent towards the northeast until meeting the southern terminus of the trail implemented as Phase 1 of the Eastern Ridgeline Project. At approximately the center of this portion of the trail (approximately 180 feet to each side), an ADA-compliant landing area would be constructed. This would be comprised of a 5-foot-wide by 10-foot-wide landing with a maximum 2 percent slope and a 2.5-foot-wide by 10-foot-wide transition area with a 3- to 5-percent slope on either side of the landing.

In addition to the trail, the proposed Project would remove the existing chain-link perimeter fence from the southwest corner of the Project site around to the north side of the double-entry gate, a distance of approximately 900 linear feet, which would be replaced with an approximate 4-foot-high split-rail fence. To allow continued park maintenance and patrol vehicle access, the existing double-entry gate would be replaced with a 6-foot-high, 20-foot-wide chain-link gate with a 6-foot-high stone pilaster on either end. Details of the proposed fencing and gate are presented in Figure 6. The existing westerly fence and easterly fence, north of the access gate, would remain and be protected in place during construction activities.

As discussed above, the proposed trail alignment was designed for minimal impact on existing vegetation; the majority of existing trees and other vegetation would be protected in place during construction activities. It is anticipated that approximately three mature, non-native trees would be removed, including a *Prunus* sp. (cherry), an *Acacia* sp. (wattle), and a *Querqus occidentalis* (cork oak). As shown in Figure 7, Proposed Planting Plan, the proposed Project would involve the installation of trees, shrubs and other groundcovers, grasses, and hydroseed areas. Jute mesh and shrub planting would be implemented adjacent to the trail alignment where re-grading is necessary. Hydroseeding would be conducted along the trail edges after construction and planting activities are completed. The planted areas would be temporarily irrigated via connection to the irrigation system installed as part of the Phase 1 project. As shown in Figure 5, a shallow mainline for irrigation would be permanently installed within the trail alignment. To manage irrigation of the Project site, a control valve would be installed at the top of the slope at the northern terminus of the Phase 2 Project. This valve would be opened to irrigate the new plantings and hydroseeding, via pop-up spray heads and bubblers (on the uphill side of trees), until the plants are sufficiently established to no longer require irrigation. This is anticipated to require approximately one to two years; after that point, the control valve would be permanently closed and the Project site would not be irrigated.

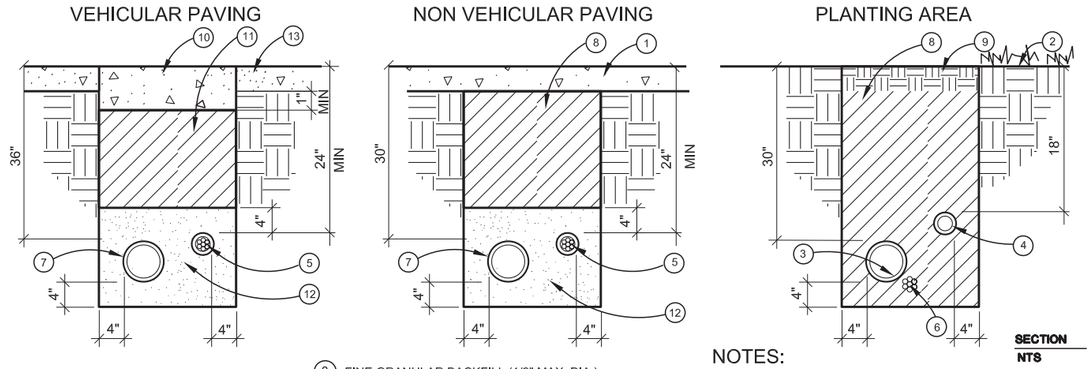

LEGEND:

1. PAVING
2. FINISH GRADE
3. PVC MAINLINE (FOR NON-POTABLE USE PURPLE PIPE WITH WORDS "RECYCLED WATER DO NOT DRINK")
4. PVC LATERAL LINE (FOR NON-POTABLE USE PURPLE PIPE WITH WORDS "RECYCLED WATER DO NOT DRINK")
5. CONTROL WIRES OR COM. CABLE IN CONDUIT
6. CONTROL WIRES OR COM. CABLE
7. SLEEVE FOR MAINLINE AND/OR LATERAL LINE
8. FINE GRANULAR BACKFILL (1/2" MAX. DIA.)
9. TOPSOIL
10. AC PAVEMENT (C2-PG 64-10) OR PCC. (560-C-3250) THICKNESS TO MATCH EXISTING PAVEMENT PLUS 1". MINIMUM THICKNESS SHALL BE 4".
11. TRENCH BACKFILL SLURRY (270-E-500)
12. SAND
13. EXISTING AC OR PCC PAVEMENT

NOTES:

1. TAPE AND BUNDLE 24V. WIRES @ 10' INTERVALS.
2. MINIMUM DEPTH OF 24V. WIRING SHALL BE 24" BELOW GRADE.
3. TRENCH WIDTH ALLOW 4" MIN. CLEARANCE BETWEEN PARALLEL PIPES.
4. SNAKE PIPES FROM SIDE TO SIDE WITHIN TRENCH TO ALLOW FOR MOVEMENT.
5. TIE A 36" LOOP IN ALL WIRING AT CHANGES OF DIRECTION. UNTIE PRIOR TO BACKFILLING TRENCHES.
6. PROVIDE THRUST BLOCKS PER APWA STANDARD PLANS FOR PUBLIC WORKS CONSTRUCTION DETAIL 508-1, EXCEPT THAT THRUST BLOCKS SHALL BE PROVIDED FOR ALL PIPES 2" AND LARGER.

PIPE TRENCHING

NOT TO SCALE

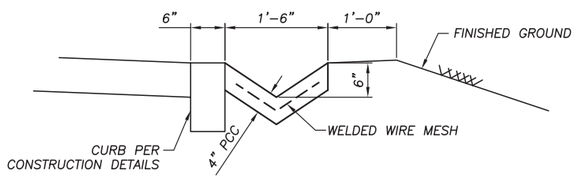

CONCRETE V-GUTTER (1)

NO SCALE

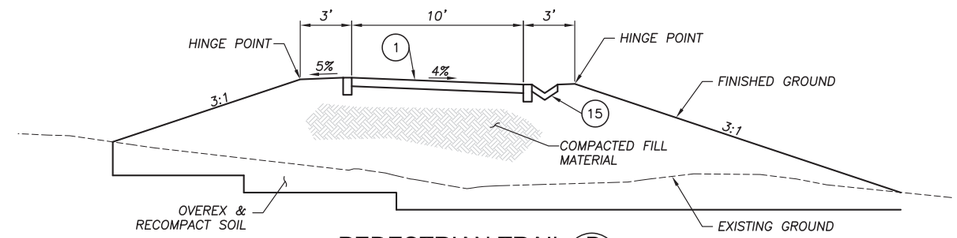

PEDESTRIAN TRAIL (B)

NO SCALE

DISPOSITION NOTES

- A — PROTECT-IN-PLACE (ITEM AS NOTED)
- B — REMOVE (ITEM AS NOTED)

CONSTRUCTION NOTES

1. CONSTRUCT PATHWAY PER CONSTRUCTION PLANS
2. CONSTRUCT FENCE PER CONSTRUCTION PLANS
3. FUTURE PAVED ACCESS ROAD (N.I.C.)
4. BENCH & AMENITIES PER CONSTRUCTION PLANS
5. SOIL MITIGATION AS REQUIRED PER SOIL MANAGEMENT PLAN & LANDSCAPE PLANS
9. CONSTRUCT 6" DEEP GRAVEL OVER GEOTEXTILE FABRIC (MIRAFI 140N OR EQUAL) OVER COMPACTED SUBGRADE
15. CONSTRUCT PCC GUTTER PER DETAIL 1, SHEET C3.6

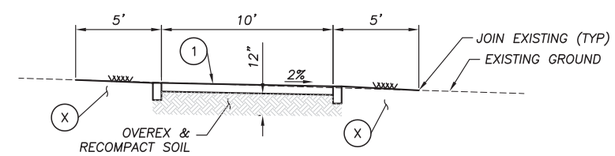

PEDESTRIAN TRAIL (A)

NO SCALE

Source: Civil Works Engineers, Inc. 2011

Grading and Construction Details

Figure 5

Kenneth Hahn Eastern Ridgeline Project Phase 2

BonTerra CONSULTING

(2-13-12 JCD) Projects\CoLADPW\J168\Graphics\EIR_Addendum\Fig5_grading_construction.pdf

D:\Projects\CoLADPW\J168\Graphics\ex_grading_construction.ai

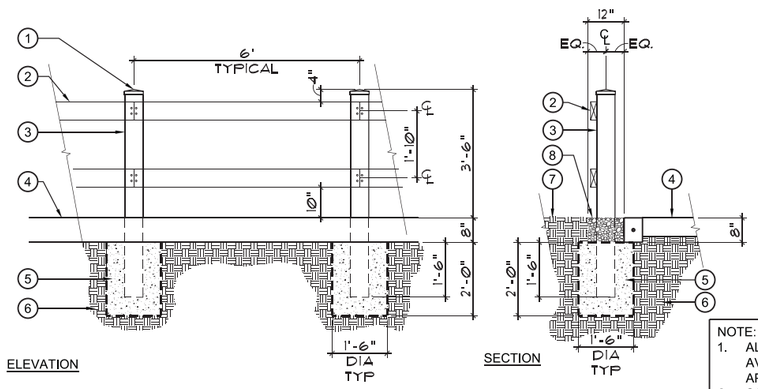

1. 6"X6" CHAMFERED TOP
2. 2"X6" RAIL. BUTT JOINT. USE TWO ⅜" DIA. X 8" LONG ZINC COATED BOLTS W/ WASHER ON EACH SIDE AND NUT. COUNTER SINK FLUSH W RAIL & POST BOTH SIDES, BACK & FRONT. PEEN ALL NUTS.
3. 6"X6" POST
4. 6" THICK DECOMPOSED GRANITE - REFER TO DETAIL 'A', THIS SHEET
5. CONCRETE FOOTING
6. COMPACTED SUBGRADE PER GEOTECH REPORT
7. EXISTING DIRT ROAD
8. 3/4" GRAVEL MULCH - 8" DEEP

NOTE:
1. ALL FENCING LUMBER SHALL BE MADE OF DURAWOOD AVAILABLE FROM THE VINYL FENCE CO. 714-210-8830 OR AN APPROVED EQUAL
2. COLOR OF LUMBER SHALL BE CEDAR. SAMPLE OF COLORED MATERIALS SHALL BE SUBMITTED TO THE ENGINEER FOR REVIEW AND APPROVAL PRIOR TO CONSTRUCTION

RECYCLED 2 RAIL FENCE

SCALE: 1/2" = 1'

A | PILASTER / RAIL FENCE

SCALE: 1/2"=1'-0"

1. RECESS 4" SQ. POST INTO FACE OF PILASTER
2. GATE FRAMES: TOP, BOTTOM, AND SIDE MEMBERS 2- 3/8" O.D., MID RAIL 1-5/8" O.D. MITER GATE FRAME CORNERS WELD AND GRIND SMOOTH.
3. FABRIC: 6 GAUGE, I IN. MESH, GREEN VINYL COATED, KNUCKLE TOP AND BOTTOM
4. HINGES: INDUSTRIAL BULLDOG HINGE (180 DEGREES SWING), 4 HINGES PER GATE, EQUALLY SPACED.
5. TRUSS ROD: 3/8 IN DIA. THREADED AT BOTH ENDS AND TENSIONED WITH TWO AT 1'-0" O.C. INDUSTRIAL TRUSS TIGHTENERS SECURED TO GATE FRAME
6. STRETCHER BAR: 3/16 X 3/4 IN. WITH 1/8 X 1 IN. TENSION BANDS AT 12" O.C.
7. TIE WIRES: 9 GAUGE AT 1'-6" O.C. AT GATE FRAME TOP, BOTTOM AND MID RAILS
8. CAST ALUMINUM FORK WITH LOCKABLE LATCH.
9. FINISH SURFACE OR GRADE PER CONSTRUCTION AND GRADING PLANS.
10. UNDISTURBED NATIVE GRADE OR CERTIFIED COMPACTED SUBGRADE PER GEOTECHNICAL REPORT
11. PILASTER - REFER TO DETAIL 'C', SHEET L-08
12. CONCRETE FOOTING
13. RAIL FENCE - REFER TO DETAIL 'C', SHEET L-05
14. 12" LONG X 5/8" DIA. DROP ROD WITH GALV. METAL SLEEVE

NOTES:
1. ALL CHAIN LINK FABRIC SHALL BE VINYL COATED OR AS NOTED
2. COLOR OF ALL VINYL COATING SHALL BE GREEN. COLOR SAMPLE SHALL BE SUBMITTED TO ENGINEER FOR REVIEW & APPROVAL PRIOR TO CONSTRUCTION.
2. METAL MEMBERS SHALL BE PAINTED GREEN TO MATCH FABRIC.
3. CHAIN LINK FENCE MATERIAL SHALL CONFORM TO SPECIFICATIONS
4. CONCRETE FOOTINGS SHALL BE ALLOWED TO SET FOR SEVEN (7) DAYS PRIOR TO INSTALLATION OF FABRIC OR HARDWARE.
5. CONTRACTOR SHALL PAY FOR & PROVIDE STRUCTURAL CALCULATIONS FOR PROPOSED CONCRETE FOOTINGS. CALCULATIONS SHALL TAKE PRECEDENCE OVER DETAILS

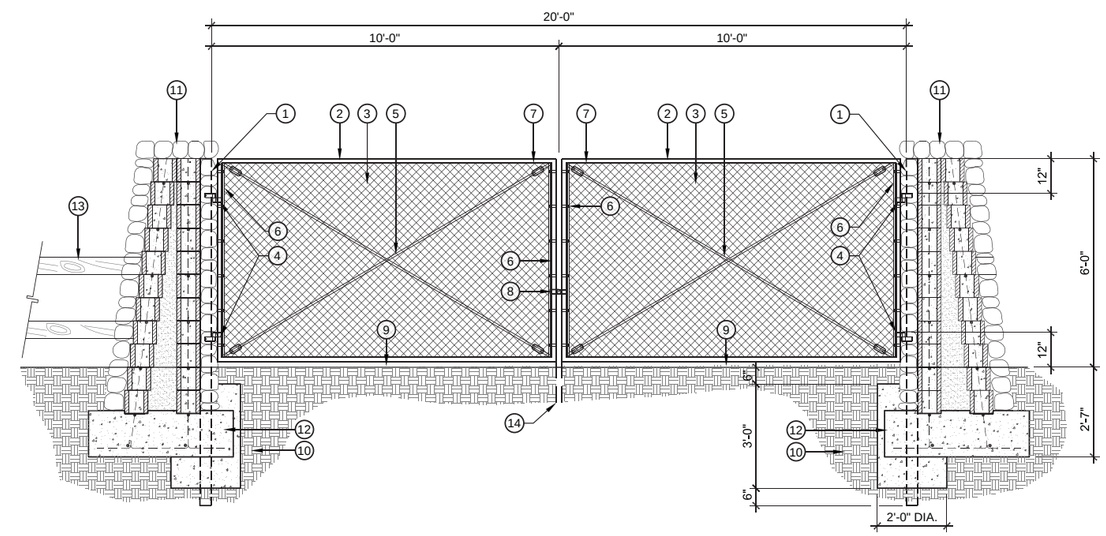

Source: Nuvis 2011

Proposed Fence and Gate Details

Figure 6

Kenneth Hahn Eastern Ridgeline Project Phase 2

BonTerra CONSULTING

(2-13-12 JCD) Projects\CoLADPW\J168\Graphics\EIR_Addendum/Fig6_proposed_fence.pdf

D:\Projects\CoLADPW\J168\Graphics\ex_proposed_fence.ai

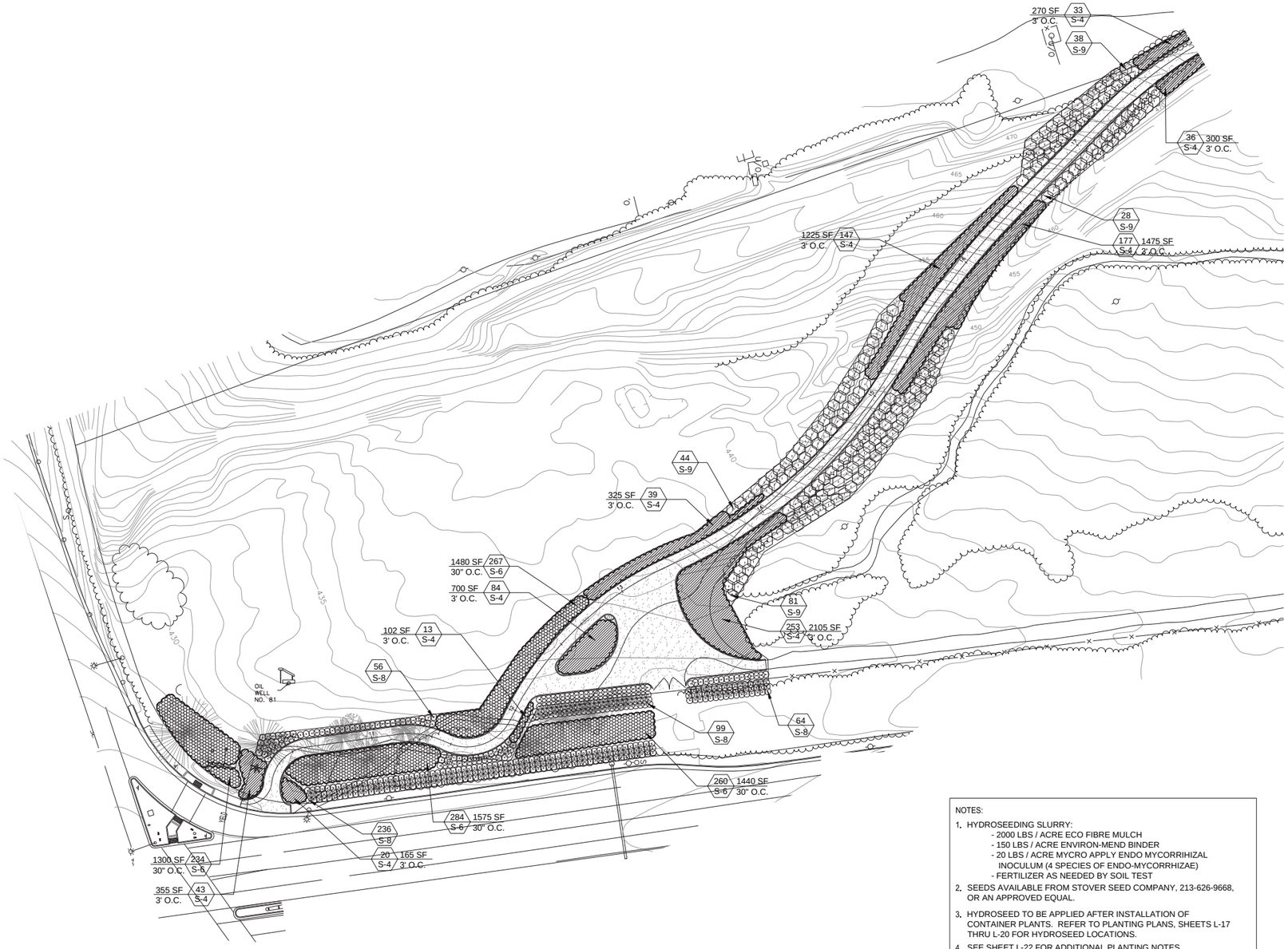

PLANT LIST

SYB.	BOTANICAL NAME	COMMON NAME	CONTAINER SIZE
TREES			
T-1	Cercis occidentalis	Western Redbud	15 GAL.
T-2	Fraxinus velutina var. coriacea	Velvet Ash	15 GAL.
T-3	Juglans californica	California Black Walnut	15 GAL.
T-4	Platanus racemosa	Western Sycamore	24", 36", 48" & 60" BOX
T-5	Quercus agrifolia	Coast Live Oak	24", 36", 48" & 60" BOX
SHRUBS & GROUNDCOVER			
S-1	Achillea millefolium	Yarrow	1 GAL.
S-2	Artemisia californica Encelia californica	California Sagebrush California Encelia	1 GAL. 1 GAL.
S-3	Baccharis pilularis var. pilularis	Coyote Brush	1 GAL.
S-4	Epilobium canum latifolium Lotus scoparius	Foothill California Fuchsia Deerweed	1 GAL. 1 GAL.
S-5	Eriogonum fasciculatum Salvia mellifera	California Buckwheat Black Sage	1 GAL. 1 GAL.
S-6	Mimulus (Diplacus) aurantiacus Penstemon centranthifolius	Bush Monkey Flower Scarlet Bugler	1 GAL. 1 GAL.
S-7	Rhamnus crocea	Redberry	5 GAL.
S-8	Salvia apiana	White Sage	1 GAL.
S-9	Salvia leucophylla	Purple Sage	1 GAL.
GRASSES			
G-1	Leymus (Elymus) condensatus	Giant Wild Rye	1 GAL.
G-2	Muhlenbergia rigens	Deer Grass	1 GAL.
NO-MOW GRASS			
TA-1	Festuca 'Fortitude'	No-Mow Fescue	HYDROSEED

TURF REPAIR MIX

TURF REPAIR MIX SHALL BE SULTAN BERMUDA GRASS AVAILABLE FROM STOVER SEED COMPANY, 800-621-0315, OR AN APPROVED EQUAL. SEED AT 10 LBS. PER 1000 S.F.

HYDROSEEDED AREA #1

Botanic Name	Common Name
Artemisia californica	Coastal Sagebrush
Baccharis pilularis	Coyote Brush
Bromus carinatus	California Brome
Calystegia macrostegia	Wild Morning Glory
Camissonia cherianthifolia	Dune Primrose
Castillegja purpurascens	Owl's Clover
Ceanothus crassifolius	Hoaryleaf Ceanothus
Dendromecon rigida	Bush Poppy
Encelia californica	Bush Sunflower
Eriogonum fasciculatum	California Buckwheat
Eriophyllum confertiflorum	Golden-Yarrow
Gnaphalium californicum	California Everlasting
Isomeris arborea	Bladderpod
Lasthenia californica	Goldfields
Lessingia filaginifolia	California Aster
Lotus scoparius	Deerweed
Lupinus bicolor	Miniature Lupine
Malacothamnus fasciculatus	Bush Mallow
Malosma laurina	Laurel Sumac
Melica imperfecta	Melic Grass
Mimulus aurantiacus	MonkeyFlower
Nassella cernua	Nodding Needlegrass
Nassella lepida	Foothill Needlegrass
Nassella pulcra	Purple Needlegrass
Phacelia cicutaria	Caterpillar Phacelia
Rhus integrifolia	Lemonadeberry
Sambucus mexicanus	Blue Elderberry
Sisyrinchium bellum	Blue-Eyed Grass
Vulpia microstachys	Samll-Flowered Fescue

HYDROSEEDED AREA #2

Achillea millefolium	Common Yarrow
Encelia californica	Coast Sunflower

HYDROSEEDED AREA #3

Epilobium canum 'Catalina'	Catalina Fuchsia

NOTES:

1. HYDROSEEDING SLURRY:
   - 2000 LBS / ACRE ECO FIBRE MULCH
   - 150 LBS / ACRE ENVIRON-MEND BINDER
   - 20 LBS / ACRE MYCRO APPLY ENDO MYCORRIHIZAL INOCULUM (4 SPECIES OF ENDO-MYCORRHIZAE)
   - FERTILIZER AS NEEDED BY SOIL TEST
2. SEEDS AVAILABLE FROM STOVER SEED COMPANY, 213-626-9668, OR AN APPROVED EQUAL.
3. HYDROSEED TO BE APPLIED AFTER INSTALLATION OF CONTAINER PLANTS. REFER TO PLANTING PLANS, SHEETS L-17 THRU L-20 FOR HYDROSEED LOCATIONS.
4. SEE SHEET L-22 FOR ADDITIONAL PLANTING NOTES.
5. PLANT MATERIAL NOTED HEREON ARE PER THE STATE OF CALIFORNIA APPROVED PLANT PALETTE FOR KENNETH HAHN EASTERN RIDGELINE.

Source: Nuvis 2011

Proposed Planting Plan

Figure 7

Kenneth Hahn Eastern Ridgeline Project Phase 2

BonTerra CONSULTING

(2-13-12 JCD) Projects\CoLADPW\J168\Graphics\EIR_Addendum\Fig7_proposed_planting.pdf

D:\Projects\CoLADPW\J168\Graphics\ex_proposed_planting.ai

Off-Site Project Components

The Project also includes off-site pedestrian improvements within the public right-of-way to improve connectivity of the Eastern Ridgeline trail to, and through, the La Brea Avenue and Stocker Street intersection. The proposed improvements to the north side of the La Brea Avenue and Stocker Street intersection include:

- Lowering the pedestrian signal push button to meet ADA-compliant reach range at the pedestrian refuge island near the northwest corner;
- Striping the north side of the southbound traffic lanes on La Brea Avenue with high visibility crosswalks and stripe advance stop bars; and
- Installing two curb cuts at the northeast corner of the intersection without affecting the existing signal/light pole.

Off-site improvements would not impact the signalization timing or infrastructure, or otherwise affect vehicle traffic movements, in the intersection. No additional landscaping or maintenance-intensive features would be installed within the La Brea Avenue/Stocker Street intersection.

2.7.3 CONSTRUCTION ACTIVITIES

Construction of the proposed Project is anticipated to begin in June 2012 with completion in November 2012, for a construction period of approximately six months. Construction of the proposed Project within the KHSRA would involve localized removal of vegetation and the portion of fencing being replaced; grading and other site-preparation activities; and installation of the proposed trail, fencing, and signage, as described above. Construction of the proposed off-site pedestrian improvements would occur concurrent with construction of the on-site Project components, and would involve limited demolition activities (for the curb cuts) and installation (i.e., concrete placement, painting, wiring) of the proposed intersection features, which would require only hand tools.

Construction equipment and materials would be staged, and all construction workers would park on the Project site or at other locations within designated, pre-approved areas within the KHSRA. Implementation of the proposed trail improvements would require commonly used construction equipment such as an excavator, bulldozers, loaders, and dump trucks. Earth-moving activities for the proposed Project would involve grading to depths between 1 foot and 2 feet below grade and fills from 0 to 6 feet thick; it would also involve soil movement within the site of approximately 2,850 cubic yards (cy) of cut soils and 1,850 cy of fill soils. Soils would be balanced on site; no import or export of soils or their associated truck trips would be necessary. Excess cut soils would be spread or stockpiled within the Eastern Ridgeline area in the immediate proximity of the KHSRA portion of the site.

2.7.4 OPERATION AND MAINTENANCE

Long-term operation and maintenance of the proposed Eastern Ridgeline Phase 2 trail would involve the same type and frequency of activities as the existing trail facilities. This includes periodic visits by maintenance crews to ensure that the trail and related facilities (e.g., fencing, signage, vegetation/irrigation) are properly maintained and safe for public use. The proposed trail would be accessed for maintenance either from the north, via the existing Phase 1 trail alignment or via the gated access drive/turn-around area at the southern toe of the proposed trail alignment.

Although the Project site already provides a walking trail, the proposed Project is expected to increase visitation to the KHSRA, as anticipated in the Final EIR, because the proposed improvements would benefit both the visual quality and function of the trail and intersection. The Final EIR reports that, during weekends in the summer months, nearly 20,000 people visit the KHSRA. However, visitation to specific recreation features within the KHSRA is not calculated.

Visitors on foot or bicycle will be able to access the Eastern Ridgeline trail either from the trailhead at the La Brea Avenue/Stocker Street intersection or from within the KHSRA. While the proposed improvements within the intersection are intended to encourage pedestrian travel to and from the KHSRA, visitation via vehicle would remain the primary, though not only, mode of access, as the area surrounding the Project site is dominated by vehicular transportation. Visits to the Eastern Ridgeline trail, both currently and with proposed Project implementation, are partially defined by the available public parking in the immediate area, which includes the 28-space Upper Lot within the KHSRA and the 38-space City of Los Angeles lot within the Norman O. Houston Park located to the east. The Houston Park lot serves primarily this City park and provides some overflow parking for the KHSRA.

Based on the available parking and because the proposed Project would continue to provide passive recreation similar to the existing condition, rather than an entirely new recreation feature, the County does not anticipate that the proposed Project would result in substantially more visits to the Eastern Ridgeline trail or the KHSRA as a whole. However, for purposes of analysis in this Addendum No. 2, a conservative, high level of potential visitation was estimated, such as on a weekend day in the summer months. Based on consultation with the County Department of Parks and Recreation, a maximum day scenario for vehicle trips was calculated as follows: All of the 28 Upper Lot spaces and ½ of the Houston Park lot spaces (19) would be used by 2 vehicles in a day, with an average of 2 persons per vehicle. This represents approximately 94 vehicle visits in 1 day and a total of 188 persons via private vehicle; this is less than $^{1}/_{10}$ of 1 percent (approximately 0.01 percent) of the 20,000-person peak visitation described above. As discussed above, there would also be pedestrian visitors. Additionally, some portion of this visitation is occurring as an existing condition. However, for purposes of this analysis, the total, conservative estimate of visitation by vehicle was used in the analysis, particularly analysis of air quality, greenhouse gas emissions, and noise.

2.7.5 PROPOSED PROJECT AND KHSRA GENERAL PLAN AMENDMENT COMPARISON

During development of the KHSRA General Plan Amendment, the DPR identified constraints and opportunities for future development of the KHSRA. Two of the primary opportunities identified for the KHSRA include (1) greenway connections and (2) pedestrian access and trail connections. The KHSRA General Plan Amendment and Final EIR states:

> The creation of greenways along streets and roads leading to the park could connect KHSRA to adjacent urban areas, connecting the park itself to the surrounding areas and providing important pedestrian and bicycle access to the park apart from the high speed, high volume adjacent streets. Existing undeveloped corridors are located along La Brea [Avenue] from Five Points to Jim Gilliam Park, along Stocker Street from Five Points to Presidio Boulevard.

As described in the Final EIR, the Five Points' "location at a high point where the three streets intersect severely limits visibility and a complex signal pattern accommodating through traffic and turning lanes makes pedestrian crossings very difficult and raises serious safety issues.

The concept of greenways along the park edges is the opportunity identified to create new pedestrian walkways, bicycle trails, and pedestrian bridges over busy streets to provide

important public access and pedestrian connections between surrounding areas and the KHSRA. Specific potential development opportunities described in the Final EIR pertaining to the proposed Phase 2 Project site include:

- Pedestrian bridges for trail connections and safe pedestrian access at Five Points, where the Stocker Street and La Brea Avenue Trails intersect with the KHSRA and
- Landscaped walking trails along Stocker Street, La Brea Avenue and Overhill Drive, connecting to local parks and public transportation.

As summarized above, the Five Points intersection and the adjacent portion of the KHSRA (i.e., the Eastern Ridgeline) were specifically identified in the KHSRA General Plan Amendment and Final EIR as locations for future development. The proposed Project includes improvements to the existing Eastern Ridgeline Trail and the proposed minor intersection modifications expressly reflect the identified opportunities to connect the park edges, including along La Brea Avenue and Stocker Street, to surrounding urban areas and improving the safety of the Five Points intersection.

As discussed above, the Project site is within a Resource Protection Management Zone, which is managed with resource protection as the foremost consideration. Accordingly, the Final EIR identifies the following activities as typical in this management zone:

- Hiking and biking;
- Photography and nature study; and
- Interpretive programs.

The Final EIR identifies the following as allowed facilities in this management zone:

- Vehicular roads or trails (where they do not adversely affect resources);
- Historic features;
- Occasional directional and regulatory signs and safety signs;
- Footbridges;
- Appropriate visitor amenities (e.g., drinking water, comfort stations, rest areas, etc.);
- Interpretive signs to protect natural or cultural resources or to promote understanding of natural processes;
- Boardwalks, fencing, and other features to direct travel appropriately to avoid sensitive resources; and
- Utilities (wells, utility lines, pump stations, and other facilities where they are screened from view).

The proposed on-site trail realignment and related improvements to landscape and hardscape (i.e., fencing and signage) are consistent with the permitted activities and facilities in the Resource Protection Management Zone. Specifically, visitors accessing the proposed Phase 2 trail would participate in passive activities, including hiking, photography, and nature study. The proposed facilities include a trail, located so as not to adversely affect resources, appropriate visitor amenities (e.g., benches, trash receptacles, water fountains), and utilities (i.e., underground water line and related irrigation components).

As also discussed above, the Project site is within both the Five Points and Trails Connection Management Area and the Eastern Ridgeline Management Area. The guidelines developed for these management areas applicable to the proposed Project are presented above in Section 2.7.1, KHSRA General Plan Amendment Summary. As described in the Final EIR, "Management areas for KHSRA are designed to address the wide array of distinct park, recreational and open space uses proposed for the park and the specific needs of different land use types".

Consistent with the guidelines for the Five Points and Trails Connection Management Area, the proposed Project provides access to a trail in the Eastern Ridgeline area and improves the connection to the nearby Norman O. Houston Park. Consistent with the guidelines for the Eastern Ridgeline Management Area, the proposed trail realignment and related amenities have been designed to protect natural habitat, provide scenic views from the ridgeline, and provide appropriate public access to the Eastern Ridgeline. As shown on Figure 7, proposed landscaping would include a plant palette of native and other drought-tolerant species appropriate to the region. The planted areas would be temporarily irrigated to establish new plants and to minimize runoff.

In summary, the proposed Project reflects the known opportunities and constraints of the KHSRA and surrounding areas, and would be consistent with the anticipated activities and facilities in a Resource Protection Management Zone and the goals of both the Eastern Ridgeline Management Area and the Five Points and Trails Connection Management Area. As such, the proposed Project is consistent with both the type and scope of the Project anticipated for development under the KHSRA General Plan Amendment.

SECTION 3.0 ENVIRONMENTAL ANALYSIS

This Addendum No. 2 has been prepared to determine whether the proposed Project would result in new significant environmental impacts or a substantial increase in the severity of impacts identified in the KHSRA General Plan Amendment and Final EIR. The environmental analysis presented herein is guided by the scope and findings of the Final EIR and the nature of the proposed Project. The KHSRA General Plan Amendment and Final EIR addressed the following topics (Section numbers for this Addendum No. 2 are listed in parentheses):

- Aesthetics (Section 3.1),
- Air Quality (Section 3.2),
- Biological Resources (Section 3.3),
- Cultural Resources (Section 3.4),
- Geology, Soils, and Seismicity (Section 3.5),
- Hazards and Hazardous Materials (Section 3.7),
- Hydrology and Water Quality (Section 3.8),
- Land Use (Section 3.9),
- Noise (Section 3.10),
- Plans and Policies (Section 3.9),
- Recreation (Section 3.12),
- Traffic and Circulation (Section 3.13), and
- Utilities and Public Services (Sections 3.11 and 3.14, respectively).

The program-level analysis in the KHSRA General Plan Amendment and Final EIR determined that all environmental impacts identified would be less than significant or less than significant with mitigation. There were no significant and unavoidable impacts identified for implementation of the KHSRA General Plan Amendment. The project-level analysis of the Eastern Ridgeline Phase 1 Trail project addressed in Addendum No. 1 determined that there would be no significant and unavoidable impacts or potentially significant impacts requiring new mitigation measures.

The following analysis provides (1) a summary of the Final EIR analysis and (2) a comparative impact analysis of the of the proposed Project for each of the topics addressed in the Final EIR as well as greenhouse gas (GHG) emissions (Section 3.6). The analysis herein is based on the impact questions provided in Appendix G of the CEQA Guidelines, as amended in March 2010, subsequent to the certification of the Final EIR. The amendments to the Appendix G included the addition of GHG emissions as a formal CEQA topic. The analysis provided in this Addendum No. 2 includes a discussion of GHG emissions and the proposed Project. The March 2010 revisions to the CEQA Guidelines included refinements to impact questions within Appendix G. The analysis presented in Section 3.0 reflects all amendments to Appendix G.

This analysis assumes the implementation of the adopted mitigation measures for development under the KHSRA General Plan Amendment to the proposed Project. This analysis assumes that the proposed Project shall implement the current regulatory requirements, adopted mitigation measures, and the refined Project-specific mitigation measures identified for biological resources and hazardous materials. There are no proposed changes to the mitigation measures adopted as part of the KHSRA General Plan Amendment and Final EIR. It is noted that each mitigation

measure in the Final EIR ends with the following sentence: "However, the Department would require examination of many specific facilities and Management Plans included in the General Plan Amendment at the time they are proposed for implementation to determine if further environmental review at a more detailed project-specific and site-specific level were necessary." This Addendum No. 2 is an implementation of this Final EIR requirement, as it provides a detailed project-specific and site-specific level of environmental review for the proposed Project. Therefore, this requirement is not repeated in the Final EIR mitigation measures presented herein that are applicable to the proposed Project.

As demonstrated in the following analysis, the proposed Project would not result in new significant environmental impacts or a substantial increase in the severity of impacts identified in the Final EIR.

3.1 AESTHETICS

The Final EIR determined that potential aesthetics impacts related to the addition of new facilities; ground disturbance activities; and trespassing and improper use of public access areas that could lead to litter, disturbed vegetation, and damage to KHSRA facilities and resources with development under the KHSRA General Plan Amendment would be less than significant with implementation of adopted mitigation measures (MMs) Aes-1 through Aes-3.

Impact Analysis

The following impact analyses derived from Appendix G of the CEQA Guidelines are addressed to determine if the proposed Project would result in new or more severe impacts related to aesthetics than identified in the Final EIR and Addendum No.1.

a) Would the project have a substantial adverse effect on a scenic vista?

As identified in the Final EIR, there are no officially designated scenic areas or routes/highways proximate to the KHSRA. According to the Final EIR, areas that are most sensitive to scenic quality degradation are those along ridgelines, which are visible from long-distance and near-distance views. Also, the east and west ridges of the KHSRA provide unique and unparalleled panoramic vistas of the Los Angeles basin, the Santa Monica Bay, and the San Gabriel and Santa Monica Mountains. As discussed further under impact question(c) below, the proposed Project would result in a similar and potentially improved visual quality compared to the existing condition. Therefore, views of the site and surrounding area from both local and long-range vantage points and within the site would not be degraded or otherwise adversely affected with implementation of the proposed Project.

b) Would the project substantially damage scenic resources, including, but not limited to, trees, rock outcroppings, and historic buildings within a state scenic highway?

As identified in the Final EIR, there are no officially designated routes/highways proximate to the KHSRA. Therefore, the proposed Project would not damage scenic resources within a scenic highway.

c) Would the project substantially degrade the existing visual character or quality of the site and its surroundings?

The proposed Project site design, materials, colors, and landscape plan have been developed to provide a visually pleasing recreational feature that integrates into the natural environment as well as the existing developed features within the KHSRA. As discussed in Section 2.7, Project Description, per the approval of the LACDPW, the proposed Phase 2 trail realignment has been designed to meet ADA standards of the *2009 California State Parks Accessibility Guidelines,*

rather than California Building Code trail accessibility requirements to substantively reduce the extent of vegetation removal and grading required to implement the Project and thereby better maintain the natural character of the Project site.

The tallest proposed component would be the six-foot-high chain-link entry gate and adjoining stone pilasters. The existing entry gate is a similar height, but is comprised solely of chain-link fence. While the stone pilasters would be more visually apparent than the chain-link fence, which is transparent, the stone pilasters would generally be considered more aesthetically pleasing. Similarly, the split-rail fence proposed to replace the existing chain-link fence along the southern and eastern site perimeters would be considered by most to be more aesthetically pleasing. These proposed fence and gate components would continue to maintain a human scale at ground level, and the building materials would blend into the surrounding vegetation, including much taller trees. Implementation of the proposed Project would involve ground disturbance, including vegetation removal and grading. The remaining portions of the existing chain-link fence (i.e., along the western boundary of the site), existing vegetation on the majority of the site, and the KHSRA entrance sign would remain and be protected in place during construction activities. Consistent with Final EIR MMs Aes-1 and Aes-2, the proposed Project has been designed to minimally impact existing trees and other vegetation; disturbed areas would be revegetated with native plant species consistent with the approved KHSRA plant palette; and the extent of cut and fill slopes has been designed to maintain the existing contours of the site topography as much as possible and to retain the overall shape of the ridge. Therefore, the Project's proposed trail component would not substantially degrade the existing visual quality of the site, and could be considered to result in improved visual quality.

The proposed pedestrian accessibility features on the north side of the La Brea Avenue/Stocker Street intersection would be similar to the existing facilities in terms of location, type, color(s), and scale. These features would result in similar, and potentially improved, visual quality compared to the existing condition. The proposed Project would be expected to result in increased public use of the area. Therefore, consistent with Final EIR MM Aes-3, the proposed Project retains perimeter fencing and access gates to minimize trespassing, and the public use site would continue to be monitored for compliance with KHSRA rules and regulations. There would be a less than significant impact related to visual quality.

d) Would the project create a new source of substantial light or glare which would adversely affect day or nighttime views in the area?

The proposed Project does not include any light fixtures or other sources of daytime or nighttime light or glare and would not, therefore, create a new source of substantial light or glare.

<u>Adopted Mitigation Measures Applicable to the Proposed Project</u>

Aes-1 Potential aesthetic quality impacts associated with the addition of new facilities should be reviewed at the project-level for specific facilities or Management Plans proposed under the KHSRA General Plan Amendment and mitigation measures shall be considered, including but not limited to:

- Implement design practices that reduce the overall aesthetic effect of new roads and trails, including, but not limited to:
    - Road and trail design guidelines that require use of best management practices for road location and alignment, such as locating and designing roads and trails to follow natural topography; minimizing stream crossings; avoiding large cut-and-fill road designs; and minimizing excavation.

  - Design and site new roads and trails to minimize grading and the visibility of cut banks and fill slopes.
  - Overpasses, safety, and directional signs, and other road and highway structures may protrude above a skyline only when it can be demonstrated that: the facility is necessary for public service and safety, the break in the skyline is only seen in the foreground, and the break in the skyline is a minimum necessary to provide the required service.
  - Screen and restore disturbed areas with an appropriate mix of native vegetation species.

- Implement design practices that reduce the overall aesthetic effect of new facilities including, but not limited to:
  - Include screening vegetation where appropriate.
  - Where grading is necessary, contour slopes and landforms to mimic the surrounding environment as much as possible.
  - Incorporate architectural siting/design elements that are compatible with the applicable surroundings.
  - Eliminate, wherever possible, the use of unpainted metallic surfaces and other sources that may cause increased levels of reflectivity.
  - Minimize night lighting where practicable. Where night lighting is necessary, direct downward and site and shield new exterior lighting such that it is not highly visible or obtrusive.
  - Maintain the silhouette of new structures below the skyline of bluffs, cliffs, or ridges.
  - Design any new structural additions to historic structures to harmonize with older structural features and comply with scenic easements and aesthetic guidelines.
  - Encourage the salvage and selective reuse of building features if historic structures are demolished.
  - Conduct project-level visual simulations for any facility to be located on prominent ridgelines.
  - Screen and restore disturbed areas with an appropriate mix of native vegetation species.

Implementation of design guidelines and vegetation protection and restoration activities, as described above, would reduce the potential program-level aesthetic quality impact associated with the implementation of the KHSRA General Plan Amendment.

Aes-2 Potential aesthetic quality impacts associated with vegetation disturbance should be reviewed at the project-level for specific facilities or Management Plans proposed under the KHSRA General Plan Amendment and mitigation measures shall be considered, including but not limited to:

- Require development of a native species planting program prior to implementing prescribed burning or non-native plant removal activities.

- Require that prescribed burns be conducted under conditions that would not harm plant species that reproduce through seed only.
- Restore and screen disturbed areas as soon as feasible following removal or prescribed burn activities.
- Minimize the total area and duration of soil exposure.

Implementation of these vegetation protection and restoration actions would reduce the potential program-level aesthetic impact related to vegetation disturbance associated with the implementation of the KHSRA General Plan Amendment.

Aes-3 Potential aesthetic quality impacts associated with increased public use should be reviewed at the project-level for specific facilities or Management Plans proposed under the KHSRA General Plan Amendment and mitigation measures shall be considered, including but not limited to:

- Advocate responsible use of the park and enforcement of the rules and regulations established for use of the park by increasing public education and awareness of Park resource sensitivity and would publish rules and regulations for Park visitors. This information shall be provided in all areas subject to public use, including the kiosks, entrance stations, visitor centers, etc. This information should also be available through adjacent jurisdictions and public use facilities, such as those operated by Los Angeles County, the City of Culver City, and the City of Los Angeles.
- Implement an inspection and maintenance program for facilities used by the public and inspection of perimeter fencing, access gates, and locks in order to minimize trespassing and illegal dumping.
- Establish coordinated enforcement of public use of the park with adjacent jurisdictions, including Los Angeles County, the City of Culver City, and the City of Los Angeles. Include appropriate staffing to monitor public use of the park and enforcement of Park rules and regulations.

Implementation of the above measures would reduce the potential program-level aesthetic impacts related to increased public use associated with the implementation of the KHSRA General Plan Amendment.

Refined Project-Specific Mitigation Measures

None.

Level of Significance for Proposed Project

Based on the proposed Project description and implementation of the mitigation measures listed above, Project impacts related to aesthetics would be less than significant. The proposed Project would not result in a new or substantially more severe impacts related to aesthetics than identified in the Final EIR and Addendum No. 1.

3.2 AIR QUALITY

The Final EIR determined that potential air quality impacts related to emissions due to equipment and dust generation during construction of new facilities; increased motor vehicle emissions due to increases in visitation to the park and jobs related to the administration, operations, and maintenance of the park; and emissions from implementing prescribed

burns with development under the KHSRA General Plan Amendment would be less than significant with implementation of adopted MMs Air-1 through Air-3.

Existing Air Quality

The KHSRA is located within the jurisdiction of the South Coast Air Quality Management (SCAQMD) and is within the South Coast Air Basin (SoCAB). Table 1 provides the current status of attainment of federal and State ambient air quality standards (AAQS) in the SoCAB. The SoCAB's attainment status has changed since the certification of the Final EIR.

TABLE 1
CRITERIA POLLUTANT DESIGNATIONS IN THE SOUTH COAST AIR BASIN

Pollutant	State	Federal
O_3 (1-hour)	Nonattainment	No Standard
O_3 (8-hour)		Extreme Nonattainment
PM10	Nonattainment	Serious Nonattainment
PM2.5	Nonattainment	Nonattainment
CO	Attainment	Attainment/Maintenance
NO_2	Nonattainment	Attainment/Maintenance
SO_2	Attainment	Attainment
Lead	Nonattainment/Attainment[a]	Nonattainment/Attainment[d]
All others	Attainment/Unclassified	No Standards

O_3: ozone; PM10: large particulate matter with a diameter of 10 microns or less; PM2.5: fine particulate matter with a diameter of 2.5 microns or less; CO: carbon monoxide; NO_2: nitrogen dioxide; SO_2: sulfur dioxide.

[a] Los Angeles County was reclassified from attainment to nonattainment for lead in 2010; the remainder of the SoCAB is in attainment of the State and federal lead standards.

Source: CARB 2010

Appendix G of the State CEQA Guidelines notes that the significance criteria established by the applicable air quality management district may be relied upon to make significance determinations. The SCAQMD has established significance thresholds to assess the regional and localized impacts of project-related air pollutant emissions; Table 2 presents the most current significance thresholds. A project with daily emission rates, risk values, or concentrations below these thresholds is generally considered to have a less than significant effect on air quality.

TABLE 2
SCAQMD AIR QUALITY SIGNIFICANCE THRESHOLDS

Mass Daily Thresholds[a]		
Pollutant	**Construction**	**Operation**
NOx	100 lbs/day	55 lbs/day
VOC	75 lbs/day	55 lbs/day
PM10	150 lbs/day	150 lbs/day
PM2.5	55 lbs/day	55 lbs/day
SOx	150 lbs/day	150 lbs/day
CO	550 lbs/day	550 lbs/day
Lead	3 lbs/day	3 lbs/day

TABLE 2 (Continued)
SCAQMD AIR QUALITY SIGNIFICANCE THRESHOLDS

Toxic Air Contaminants	
TACs[b]	Maximum Incremental Cancer Risk ≥ 10 in 1 million Cancer Burden > 0.5 excess cancer cases (in areas ≥ 1 in 1 million) Hazard Index ≥ 1.0 (project increment)
Odor	Project creates an odor nuisance pursuant to Rule 402[c]
Ambient Air Quality For Criteria Pollutants[d]	
NO_2	1-hour average ≥ 0.18 ppm Annual average ≥ 0.03 ppm
PM10	24-hour average ≥ 10.4 μg/m^3 (construction) 24-hour average ≥ 2.5 μg/m^3 (operation) Annual average ≥ 1.0 μg/m^3
PM2.5	24-hour average ≥ 10.4 μg/m^3 (construction) 24-hour average ≥ 2.5 μg/m^3 (operation)
Sulfate	24-hour average ≥ 1.0 μg/m^3
CO	1-hour average ≥ 20.0 ppm (State) 8-hour average ≥ 9.0 ppm (State/federal)

NOx: nitrogen oxides; lbs/day – pounds per day; VOC: volatile organic compounds; ; PM10: large particulate matter with a diameter of 10 microns or less; PM2.5: fine particulate matter with a diameter of 2.5 microns or less; SOx: sulfur oxides; TACs: toxic air contaminants; NO_2: nitrogen dioxide; ppm: parts per million; μg/m^3: micrograms per cubic meter CO: carbon monoxide.

[a] Source: SCAQMD 2011a.

[b] Toxic air contaminants (carcinogenic and non-carcinogenic).

[c] Rule 402 states that a project shall not "discharge from any source whatsoever such quantities of air contaminants or other material which cause injury, detriment, nuisance, or annoyance to any considerable number of persons or to the public, or which endanger the comfort, repose, health or safety of any such persons or the public, or which cause, or have a natural tendency to cause, injury or damage to business or property. The provisions of this rule shall not apply to odors emanating from agricultural operations necessary for the growing of crops or the raising of fowl or animals".

[d] Ambient air quality threshold based on SCAQMD Rule 403.

Impact Analysis

The following impact analyses derived from Appendix G of the CEQA Guidelines are addressed to determine if the proposed Project would result in new or more severe impacts related to air quality than identified in the Final EIR and Addendum No.1.

a) Would the project conflict with or obstruct implementation of the applicable air quality plan?

The Final EIR states that project consistency with the applicable Air Quality Management Plan is determined by the local air quality control district, and a significance determination on this threshold is not provided in the Final EIR. However, as discussed in Section 2.7.5, the proposed Project would be consistent with the anticipated activities and facilities in a Resource Protection Management Zone and the goals of both the Eastern Ridgeline Management Area and the Five Points and Trails Connection Management Area of the KHSRA General Plan Amendment. Also, as discussed in Section 2.7.5, improvement of pedestrian safety and accessibility within the off-site intersection of La Brea Avenue and Stocker Street is specifically identified as an opportunity for development under the KHSRA General Plan Amendment. Because of this and because the proposed Project's estimated criteria pollutant emissions would be less than significant, as discussed below, it is concluded that the proposed Project would not conflict or obstruct implementation of the SCAQMD's Air Quality Management Plan and there would be a less than significant impact.

b) Would the project violate any air quality standard or contribute substantially to an existing or projected air quality violation?

Construction Emissions – Regional

As described in Section 2.7.3, construction of the proposed Project, including off-site components, is anticipated to begin in June 2012 with completion in November 2012, for a total construction period of approximately six months. Construction of the proposed Project within the KHSRA would involve removal of vegetation, grading, and installation of the proposed trail; installation of replacement fencing; and installation of signage over the course of the six-month construction period. Construction of the proposed off-site pedestrian improvements would involve demolition of existing curbs for the curb cuts, concrete placement, painting, and electrical work over the course of several days with the six-month construction period. The intensity of construction activities for the off-site improvements would be nominal when compared to the on-site Project components, as they include only two curb cuts, a localized area of road striping, a lowering a pedestrian signal push button. These activities would require minimal construction tools and would be quickly completed as part of the six-month total construction period. The modeling of construction emissions estimates the total anticipated construction activity over a six-month period, including both the on-site (i.e., KHSRA) and off-site Project components. Construction equipment and materials would be staged and all construction workers would park on the Project site or elsewhere within designated, pre-approved areas within the KHSRA. Implementation of the proposed Project would require commonly used construction equipment such as an excavator, bulldozers, loaders, dump trucks, and a concrete saw. Soils would be balanced on site, and no import or export of soils or their associated truck trips would be necessary.

Criteria pollutant emissions would occur during construction from operation of construction equipment; generation of fugitive dust from grading and earthmoving activities; import of construction materials; and from operation of vehicles driven to and from the site by construction workers. Project-generated construction emissions were estimated using the California Emission Estimator Model (CalEEMod) Version 2011.1.1 computer program (SCAQMD 2011b). CalEEMod is designed to model construction emissions for land development projects and allows for the input of project- and County-specific information. The CalEEMod model input was based on the construction assumptions described above and in the Project description and information provided by the Project Applicant. Where specific information was not known, engineering judgment and default CalEEMod settings and parameters were used. The model inputs include estimated equipment use, such as dozers and loaders, for each construction phase and the duration of each phase. The model also includes dust-control measures corresponding to the requirements of SCAQMD Rule 403, Fugitive Dust. Table 3 presents the estimated maximum daily emissions for proposed Project construction, and compares the estimated emissions with the SCAQMD daily mass emission thresholds.

TABLE 3
ESTIMATED MAXIMUM DAILY CONSTRUCTION EMISSIONS
(POUNDS/DAY)

Year of Construction	VOC	NOx	CO	PM10	PM2.5
2012	6	51	27	7	5
SCAQMD Thresholds	*75*	*100*	*550*	*150*	*55*
Exceeds Threshold?	**No**	**No**	**No**	**No**	**No**

VOC: volatile organic compounds; NOx: nitrogen oxides; CO: carbon monoxide; PM10: respirable particulate matter with a diameter of 10 microns or less; PM2.5: fine particulate matter with a diameter of 2.5 microns or less

Emissions shown are for winter season; summer emissions would be the same or slightly less.

Source: CalEEMod data in Appendix A.

As shown in Table 3, construction-related emissions generated by the proposed Project would be below the SCAQMD regional thresholds of significance. Therefore, the impact would be less than significant and less than anticipated in Final EIR. Final EIR MM Air-1, while not required, would be incorporated into the Project to further minimize regional construction emissions.

Construction Emissions – Local/Ambient Air Quality

In addition to the mass daily emissions thresholds established by the SCAQMD, short-term local impacts to nearby sensitive receptors from on-site emissions of nitrogen dioxide (NO_2), carbon monoxide (CO), large particulate matter with a diameter of 10 microns or less (PM10), and fine particulate matter with a diameter of 2.5 microns or less (PM2.5) are examined based on SCAQMD's localized significance thresholds (LST) methodology. Local impacts from construction emissions were not addressed in the Final EIR because it is a program-level analysis. To assess local air quality impacts for development projects without complex dispersion modeling, the SCAQMD developed screening (lookup) tables to assist lead agencies in evaluating impacts.

For the purposes of an LST analysis, the SCAQMD considers receptors where it is possible that an individual could be exposed to NO_2 and CO for 1 hour and be exposed to PM for 24 hours. The lookup tables' emissions limits are based on the SCAQMD Ambient Air Quality Thresholds shown in Table 2. For this analysis, it is assumed that the closest receptors would be park visitors and that the visitors may be within 25 meters[1] (82 feet) of the construction work. Because the Project is linear, it was also assumed that, for any individual receptor, the impact would be limited to emissions from one excavator, one dozer, one loader, and one heavy truck.

Table 4 shows the maximum daily on-site emissions for construction activities compared with the SCAQMD thresholds for local pollutants with receptors at 25 meters (82 feet) and an area of 1 acre. This combination of parameters provided the most conservative thresholds.

TABLE 4
LOCAL SIGNIFICANCE THRESHOLD CONSTRUCTION EMISSIONS

	NOx	**CO**	**PM10**	**PM2.5**
	Emissions (lbs/day)			
Construction maximum daily on-site emissions	26	13	3	2
LST Thresholds	*103*	*562*	*4*	*3*
Exceeds Threshold?	**No**	**No**	**No**	**No**

NOx: nitrogen oxides; CO: carbon monoxide; PM10: particulate matter with a diameter of 10 microns or less; PM2.5: particulate matter with a diameter 2.5 microns or less; lbs/day: pounds per day; LST: localized significance threshold

Note: Data is for SCAQMD Source Receptor Area 2, Northwest Coastal Los Angeles County.

Source: SCAQMD 2009 (thresholds). See Appendix A for CalEEMod model outputs.

As shown in Table 4, the local emissions from construction of the proposed Project would be less than the SCAQMD thresholds. Therefore, local construction emissions would be less than significant.

Operational Emissions

The sole source of operational (long-term) emissions for the proposed Project would be vehicles used by the park visitors. As described in Section 2.7.4, parking is available in the Eastern Ridgeline Upper Parking Lot and the City of Los Angeles parking lot within Norman O. Houston

[1] The metric system is used here to be consistent with the SCAQMD LST methodology.

Park immediately to the east. Although the proposed Project is not expected to result in substantially more visits to the Eastern Ridgeline trail or the KHSRA as a whole, for purposes of analysis in this Addendum, a conservative, high level of potential daily traffic was estimated. A maximum day scenario for vehicle trips, representing a weekend day or holiday with good weather, was postulated as follows: All of the 28 Upper Lot spaces and ½ of the Houston Park lot spaces (19) would be used by 2 vehicles in a day, with an average of 2 persons per vehicle. This represents approximately 94 vehicle visits in 1 day and approximately 188 one-way trips. Although some portion of this estimate represents existing visitation, for purposes of this analysis, the entire "worst-case" estimate is used to model emissions associated with proposed Project operation. Using this data, emissions were calculated with the CalEEMod model. This scenario is very conservative, as it does not reduce the number of trips to account for existing park visitors. Estimated peak daily operational emissions are shown in Table 5.

TABLE 5
PEAK DAILY OPERATIONAL EMISSIONS

Emissions Source	Emissions (lbs/day)				
	VOC	**NOx**	**CO**	**PM10**	**PM2.5**
Mobile sources	1	2	9	1	<0.5
SCAQMD Significance Thresholds	*55*	*55*	*550*	*150*	*55*
Exceeds Threshold?	**No**	**No**	**No**	**No**	**No**

lbs/day: pounds per day; VOC: volatile organic compounds; NOx: nitrogen oxides; CO: carbon monoxide; PM10: respirable particulate matter with a diameter of 10 microns or less; PM2.5: fine particulate matter with a diameter of 2.5 microns or less.

Notes: Emissions are the higher of summer or winter seasons.
SOx and lead emissions are not shown; these emissions would be negligible for the Project.
CalEEMod model data sheets are included in Appendix A.

As presented in Table 5, operational-related emissions generated by the proposed Project would be below the SCAQMD regional thresholds of significance. Therefore, the impact would be less than significant. MM Air-2, while not required, would be incorporated into the proposed Project where applicable to further minimize operational emissions. Specifically, portions of the proposed trail are intended to support vehicular traffic and would be finished with a decomposed granite surface that would limit fugitive dust (PM10) emissions, and the proposed intersection improvements are intended to encourage pedestrian (i.e., alternative) transportation to and from the KHSRA in the Project area.

As demonstrated by the data in Tables 3 and 4, proposed Project construction would not violate air quality standards or contribute substantially to an existing or projected violation of standards, resulting in a less than significant impact. Similarly, as demonstrated by the data in Table 5, operation of the proposed Project would not violate air quality standards, and there would be a less than significant impact. Also, the proposed Project implements Final EIR MM Air-2, as the surface of the realigned trail would be finished with decomposed granite (which would reduce fugitive dust emissions when used by motor vehicles), such as at the entry gate and in emergency events, which is an improvement over the existing, unfinished dirt surface.

c) Would the project result in a cumulatively considerable net increase of any criteria pollutant for which the project region is in non-attainment under an applicable federal or state ambient air quality standard (including releasing emissions which exceed quantitative thresholds for ozone precursors)?

The SoCAB is a federal and/or State nonattainment area for ozone (O_3), NO_2, PM10, and PM2.5.[2] As demonstrated above, the proposed Project would not result in substantial emissions of the O_3 precursors volatile organic compounds (VOC) and nitrogen oxides (NOx), NO_2, PM10, or PM2.5. Therefore, there would be no cumulative increase of these criteria pollutants for which the SoCAB is in nonattainment, and there would be a less than significant impact.

d) Would the project expose sensitive receptors to substantial pollutant concentrations?

As discussed in Threshold 3.2(b), short-term local impacts to nearby sensitive receptors from on-site emissions of NO_2, carbon monoxide (CO), PM10, and PM2.5 are examined based on SCAQMD's LST methodology. As summarized in Table 4 above, local emissions from construction of the proposed Project would be less than the SCAQMD thresholds. The sole source of operational (long-term) emissions for the proposed Project would be vehicles used by the park visitors. As discussed under Threshold 3.2(b), operational emissions generated by the proposed Project would be below the SCAQMD regional thresholds of significance. Therefore, operational emissions from traffic also would not adversely affect local sensitive receptors, and there would be a less than significant impact.

e) Would the project create objectionable odors affecting a substantial number of people?

The proposed Project would not generate chemical emissions or involve other processes that produce objectionable odors. There would be no impact.

Adopted Mitigation Measures Applicable to the Proposed Project

Air-1 Potential construction-related emissions impacts should be reviewed at the project-level for specific facilities or Management Plans proposed under the KHSRA General Plan Amendment and mitigation measures shall be considered, including but not limited to:

- Phase construction projects in such a manner that minimizes the area of surface disturbance (e.g., grading, and excavation), the number of vehicle trips on unpaved surfaces, and concurrent use of diesel equipment and other equipment or activities that release emissions. Minimizing these effects may entail clustering certain construction activities or performing them in a particular order.
- Implement a compliance-monitoring program in order to stay within the parameters of project-specific compliance documents. The compliance-monitoring program would oversee these mitigation measures and would include reporting protocols.
- Abide by SCAQMD Rule 403 (Fugitive Dust Abatement). Standard dust abatement measures could include the following elements: water or otherwise stabilize soils, cover haul trucks, employ speed limits on unpaved roads, minimize vegetation clearing, and revegetate disturbed areas post-construction.
- Suspend excavation and grading activity when winds (instantaneous gusts) exceed 25 mph.

[2] Los Angeles County is also a nonattainment area for lead. However, analysis of lead emissions impacts is limited to projects that emit significant quantities of the pollutant (e.g.., battery manufacturers and lead smelters) and is not undertaken for park development projects.

- Ensure that any stationary motor sources (such as generators and compressors) located within 100 feet of any residence or public facilities (sensitive receptors) is equipped with a supplementary exhaust pollution control system as required by the California Air Resources Board.
- Take appropriate measures to control pedestrian access to active construction areas. Recreational users should be kept a minimal distance from the operation of all construction equipment, except trucks hauling materials to and from the park.

All of these measures may not apply at each construction site. Generally, larger, more intensive construction or demolition projects require more comprehensive dust abatement programs and mitigation practices than smaller, less intensive projects.

Implementation of the practices described above would reduce the potential program-level construction-related emissions impacts associated with the implementation of the KHSRA General Plan Amendment.

Air-2 Potential operational emissions impacts should be reviewed at the project-level for specific facilities or Management Plans proposed under the KHSRA General Plan Amendment and mitigation measures shall be considered, including but not limited to:

- Pave all roads that will be used by motor vehicles to limit fugitive dust (PM10) emissions.
- Work with local public transit agencies to offer schedules that meet park use demand and allowing bikes and other recreational equipment on their routes to and from the park.
- Design park roads in a manner that reduces vehicle queuing and provides easy bus turnarounds to limit proximate CO emissions.
- Provide reserved and preferentially located carpool/vanpool parking spaces.
- Employ site plan design and building design mitigation measures that have been developed by the SCAQMD. This may include building orientation to the north for natural cooling, the use of energy efficient appliances and lights, increased insulation and window treatments, light-colored roof materials to reflect heat, shade trees to reduce building's heat, use of building materials that do not require use of paints/solvents, centralized water heating systems.

Implementation of the measures described above would reduce the potential program-level operational emissions impacts associated with the implementation of the KHSRA General Plan Amendment.

Refined Project-Specific Mitigation Measures

None.

Level of Significance for Proposed Project

Based on the proposed Project description and implementation of the mitigation measures listed above, Project impacts related to air quality would be less than significant. The proposed Project would not result in a new or substantially more severe impacts related to air quality than identified in the Final EIR and Addendum No. 1.

3.3 BIOLOGICAL RESOURCES

The Final EIR determined that the following potential biological resource impacts would be less than significant with implementation of adopted mitigation measures Bio-1 through Bio-3: (1) the addition of new facilities and improvements to existing facilities that could affect native habitats and species through direct removal of habitat, harassment, or mortality; (2) the introduction and spread of non-native species; and (3) increased activity associated with public use of the park associated with the transport of invasive species by visitors onto park land at a greater rate than occurs at present.

The following impact analyses derived from Appendix G of the CEQA Guidelines are addressed to determine if the proposed Project would result in new or more severe impacts related to biological resources than identified in the Final EIR and Addendum No.1.

Existing Biological Resources

Consistent with Final EIR mitigation measure Bio-1, the proposed Project has been designed to minimally impact existing trees and other vegetation. Disturbed areas would be revegetated with native plant species consistent with the approved KHSRA plant palette. Also, consistent with Final EIR MMs Bio-1 and Bio-2, a site-specific biological resources study was prepared for the proposed Project, including a vegetation and wildlife survey. The findings of the biological resources study are discussed below.

Methodology

BonTerra Consulting Biologists conducted a general plant and wildlife survey of the Project site on October 11, 2011. The approximate 5.5-acre survey area included the area of the proposed trail and intersection improvements and the habitats surrounding the proposed improvements. Vegetation was mapped on a 1 inch = 200 feet aerial photograph following the California Department of Fish and Game (CDFG) List of Natural Communities (CDFG 2010). Prior to the field visit, available literature describing biological, geological, soils, and hydrologic resources within the region was examined.

Vegetation

Vegetation types in the survey area include disturbed California sagebrush scrub, ornamental, and ruderal (i.e., weedy and disturbed) vegetation. Other areas on the Project site are bare ground (trails) and developed areas (sidewalks) that lack vegetation. Due to its proximity to developed areas and previous land uses (e.g., oil drilling operations), vegetation in the survey area is generally considered disturbed by non-native invasive plants, scattered trash, and homeless encampments.

The existing vegetation types and both temporary and permanent impact areas are shown in Figure 8, summarized in Table 6, and described further below. Temporary impact areas would be disturbed during construction activities, but would be revegetated with native, approved plant species. Permanent impact areas include the footprint of the trail and the vehicle turnaround area at the entry gate, as shown in Figure 8. These areas would be “used” and therefore continually disturbed as a result of Project implementation. As shown in Table 6, the proposed Project would result in a total of approximately 0.5 acre of temporary impacts and 0.4 acre of permanent impacts.

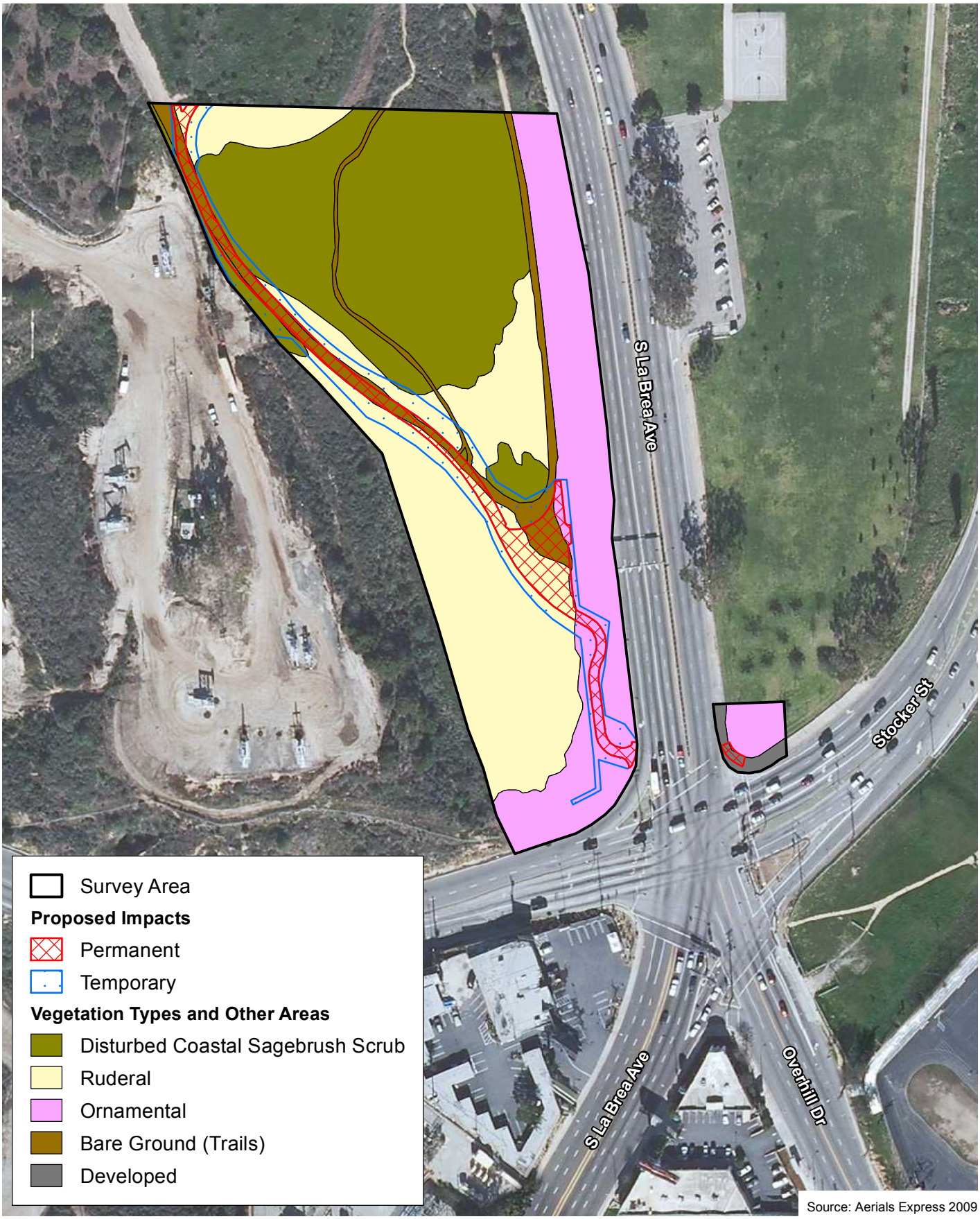

Source: Aerials Express 2009

D:\Projects\CoLADPW\J168\MXD\Ex_veg_impacts.mxd

Existing Vegetation and Project Impact Areas

Figure 8

Kenneth Hahn Park

N W E S

150 75 0 150 Feet

BonTerra CONSULTING

(Rev: 2-15-2012 CJS) PAS\Projects\CoLADPW\J168\Graphics\EIR_Addendum\Ex8_veg_impacts.pdf

TABLE 6
EXISTING VEGETATION TYPES AND IMPACT AREAS

Vegetation Type/Other Area	Existing (acres)	Temporary Impact (acres)	Permanent Impact (acres)	Total Impact (acres)
Disturbed California Sagebrush Scrub	2.00	0.09	0.01	0.10
Ruderal	1.87	0.23	0.13	0.36
Ornamental	1.26	0.10	0.07	0.17
Bare Ground (trails)	0.37	0.06	0.18	0.24
Developed (sidewalk)	0.05	0.00	0.01	0.01
Totals	**5.55**	**0.48**	**0.40**	**0.88**

The disturbed California sagebrush scrub vegetation in the survey area is dominated by California sagebrush (*Artemisia californica*). Other species include coyote brush (*Baccharis pilularis* ssp. *consanguinea*), toyon (*Heteromeles arbutifolia*), blue elderberry (*Sambucus nigra* ssp. *caerulea*), holly-leaved cherry (*Prunus ilicifolia*), and giant wild rye (*Leymus condensatus*). In some areas, California sagebrush clearly dominates and provides high quality habitat. In other areas, the community is heavily invaded by non-native species such as wild radish (*Raphanus sativus*), curly dock (*Rumex crispus*), bristly ox-tongue (*Helminthotheca echioides*), fennel (*Foeniculum vulgare*), and geraldton carnation weed (*Euphorbia terracina*).

Ruderal vegetation consists of non-native weedy species such as wild radish, curly dock, bristly ox-tongue, fennel, geraldton carnation weed, tocalote (*Centaurea melitensis*), castor bean (*Ricinus communis*), ripgut brome (*Bromus diandrus*), Russian thistle (*Salsola tragus*), and mustards (*Brassica* spp.).

Ornamental (planted) trees and shrubs are present along the southern and eastern portions of the survey area along Stocker Street and La Brea Avenue. They consist of native species such as California sycamore (*Platanus racemosa*), white alder (*Alnus rhombifolia*), coast live oak (*Quercus agrifolia*), holly-leaved cherry, and island cherry (*Prunus lyonii*). Non-native ornamental species include redbud (*Cercis* sp.), Sydney golden wattle (*Acacia longifolia*), cape plumbago (*Plumbago capensis*), rosemary (*Rosmarinus officinalis*), boxwood (*Buxus* sp.), evergreen euonymus (*Eonymus japonica*), rockrose (*Cistus* sp.), and society garlic (*Tulbaghia violacea*). Ornamentals, such as Sydney golden wattle, Peruvian pepper (*Schinus molle*), Brazilian pepper (*Schinus terebinthifolius*), and palms (*Washingtonia* sp. and *Phoenix* sp.) also occur to a limited extent, scattered within the disturbed California sagebrush scrub and ruderal vegetation types; these individuals likely spread by seeds dispersed from ornamental species planted in the survey area.

Bare ground areas consist of exposed soil devoid of vegetation. These bare areas are unpaved trails, maintained and compacted by human foot traffic. Developed areas are cemented sidewalks at the corner of Stocker Street and La Brea Avenue at the south end of Norman O. Houston Park.

Wildlife

A relatively low level of wildlife activity was observed during the general survey. From the survey area, the Kenneth Hahn State Recreation Area continues north and northwest. The only reptile species observed in the survey area was western fence lizard (*Sceloporus occidentalis*). Other reptile species expected to occur include side-blotched lizard (*Uta stansburiana*) and gopher snake (*Pituophis melanoleucus*).

Bird species observed during the survey included rock pigeon (*Columba livia*), mourning dove (*Zenaida macroura*), Say's phoebe (*Sayornis saya*), western scrub jay (*Aphelocoma californica*), common raven (*Corvus corax*), northern mockingbird (*Mimus polyglottos*), savannah sparrow (*Passerculus sandwichensis*), and house finch (*Carpodacus mexicanus*). Other birds expected to occur include California quail (*Callipepla californica*), red-tailed hawk (*Buteo jamaicensis*), bushtit (*Psaltriparus minimus*), Bewick's wren (*Thryomanes bewickii*), spotted towhee (*Pipilo maculatus*), California towhee (*Melozone* [*Pipilo*] *crissalis*), Brewer's blackbird (*Euphagus cyanocephalus*), and lesser goldfinch (*Spinus* [*Carduelis*] *psaltria*).

No mammals were observed during the survey, but sign of coyote (*Canis latrans*) and domestic dog (*Canis familiaris*) were observed. Small burrows were observed, which indicate that Botta's pocket gopher (*Thomomys bottae*) and California ground squirrel (*Spermophilus beecheyi*) are present. Bats that are expected to forage on site include California myotis (*Myotis californicus*), Mexican free-tailed bat (*Tadaria brasiliensis*), and big brown bat (*Eptesicus fuscus*).

Impact Analysis

a) Would the project have a substantial adverse effect, either directly or through habitat modification, on any species identified as a candidate, sensitive, or special status species in local or regional plans, policies, or regulations, or by the California Department of Fish and Game or U.S. Fish and Wildlife Service?

Special Status Plant Species

The only native vegetation type in the survey area is disturbed California sagebrush scrub. Special status plant species with potential to occur in sage scrub habitats require specific microhabitats (soils or moisture conditions) that are lacking in the survey area. Therefore, no special status plant species are expected to occur within the survey area due to a lack of suitable habitat and/or soils. There would be no impact to special status plant species.

Special Status Wildlife Species

Coastal California Gnatcatcher (*Polioptila californica californica*)

The coastal California gnatcatcher is a federally listed Threatened species and a California Species of Special Concern. On December 19, 2007, the U.S. Fish and Wildlife Service (USFWS) published a final rule to designate 197,303 acres of land as critical habitat for the coastal California gnatcatcher (USFWS 2007). These lands encompass portions of Orange, San Diego, Riverside, Los Angeles, San Bernardino, and Ventura Counties in California. The Project site is outside the designated critical habitat area for this species.

The coastal California gnatcatcher is a resident species (occurs year-round) in coastal sage scrub habitat types. The disturbed California sagebrush scrub in the survey area is potentially suitable habitat for the coastal California gnatcatcher. Although the survey area is within the range of this species, the coastal California gnatcatcher is currently not known to occur in the Baldwin Hills. The gnatcatcher was not observed during 21 survey visits conducted by Mr. Kimball Garrett at the KHSRA in 2000 to establish a checklist of birds that occur in the Baldwin Hills (LACMF 2001). Nor was it observed during a 2001 survey for the Baldwin Hills Energy Facility No. 1 project, which is located approximately 1.3 miles northwest of the Project site, ½ mile north of Stocker Street and 400 feet east of La Cienega Boulevard (CEC 2001). The KHSRA is isolated from known populations of gnatcatchers in the Palos Verdes Peninsula and Montebello Hills by the extensive urban development surrounding the KHSRA. An individual coastal California gnatcatcher was sighted at Ballona Wetlands in November 2010,

approximately 3.5 miles southwest of the survey area (Coffin 2010); this bird was suspected to be a dispersing individual from the Palos Verdes population. One individual was observed in the "Baldwin Hills, vicinity Culver City" in 1980, approximately 1.5 miles west-southwest of the survey area; however, neither a precise date nor a specific location was given (CDFG 2011). Both of these reported occurrences are in areas separated from the survey area by urban development. Based on the lack of historical observations and surrounding development that isolates the survey area from other occupied habitat areas, the coastal California gnatcatcher is not expected to occur and no impacts on this species are expected. However, because potentially suitable habitat is present, because the survey area is within the historic range of the species, and because no recent focused surveys have been conducted in the survey area, the coastal California gnatcatcher has a limited potential to occur. If the gnatcatcher were present, the removal of 0.10 acre (0.01 acre permanent, 0.09 acre temporary) of disturbed California sagebrush scrub would be considered a significant impact. Implementation of MM ER Trail-1, described below—which requires measures to be implemented prior to and during construction affecting areas of California sagebrush scrub—would reduce this potential impact to a less than significant level. MM Eastern Ridgeline (ER) Trail-1 is a refinement of Final EIR mitigation measure Bio-1, which requires that "Potential effects to native habitats and species should be reviewed at the project-level for specific facilities or Management Plans proposed under the KHSRA General Plan Amendment and mitigation measures shall be considered…". As such, ER Trail-1 implements the requirements of Bio-1 by providing a project-specific mitigation measure that ensures potential effects to native habitats and species are reduced to a less than significant level.

Busck's Gall Moth (*Carolella busckana*)

Busck's gall moth is a federal Candidate for listing as Threatened or Endangered. Larvae of this insect feed only on brittlebush (*Encelia california*) within a gall (i.e., structure to protect the developing larvae) that grows on the plant in response to chemical secretions of the larvae. The moth has been recorded locally from Los Angeles, El Segundo, and Beverly Terrace (CDFG 2011). Brittlebrush is common in the majority of Kenneth Hahn Park and the moth is known to occur there (LACMF 2001). Since no brittlebush is present in the survey area, it is not expected to occur. Therefore, there would be no impact on this species and no mitigation would be required.

Other Special Status Wildlife Species

Some additional special status wildlife species have potential to occur in the disturbed California sagebrush scrub. These species include coast horned lizard (*Phrynosoma blainvillii*), burrowing owl (*Athene cunicularia*), loggerhead shrike (*Lanius ludovicianus*), and Southern California rufous-crown sparrow (*Aimophila ruficeps*). Although the removal of 0.10 acre (0.01 permanent, 0.09 acre temporary) of disturbed California sagebrush scrub would be adverse, the loss of habitat would be considered less than significant due to the very limited amount being removed along existing trails in comparison to the amount of similar habitat available in the KHSRA.

However, if vegetation (all vegetation types) is removed during the nesting bird season (March 15 to September 15), the loss of an active bird nest for the species listed above or any other native bird species would be considered a violation of the Migratory Bird Treaty Act (MBTA). If ornamental vegetation is removed during the nesting raptor season (February 1 to June 30), it could directly affect a nesting raptor. Indirect noise from construction could also disturb a nesting raptor. Any disturbance to an active raptor nest would be considered a violation of *California Fish and Game Code* and would be considered a significant impact. Implementation of ER Trail-2, described below under "Refined Project-Specific Mitigation Measures", which requires a pre-construction nesting bird/raptor survey and establishment of an

appropriate buffer if an active nest is identified, would reduce this potential impact to a less than significant level. Mitigation measure ER Trail-2 is a refinement of Final EIR mitigation measure Bio-1, which includes a requirement to "…Implement a compliance-monitoring program in order to stay within the parameters of CEQA and other pertinent regulations". As such, ER Trail-2 implements the requirements of Bio-1 by ensuring that the proposed Project is compliant with the MBTA.

b) Would the project have a substantial adverse effect on any riparian habitat or other sensitive natural community identified in local or regional plans, policies, regulations, or by the California Department of Fish and Game or U.S. Fish and Wildlife Service?

As discussed under Threshold 3.3(a), the only sensitive natural community present in the survey area is disturbed California sagebrush scrub. The proposed Project would impact a total of 0.10 acre of disturbed California sagebrush scrub. Only 0.01 acre of this impact would be permanently impacted by the trail while 0.09 acre would be temporarily impacted during trail construction. This impact would be considered adverse but less than significant due to the limited amount of habitat loss in consideration of the amount of habitat available in the KHSRA, and no mitigation would be required.

c) Would the project have a substantial adverse effect on federally protected wetlands as defined by Section 404 of the Clean Water Act (including, but not limited to, marsh, vernal pool, coastal, etc.) through direct removal, filling, hydrological interruption, or other means?

There are no jurisdictional wetlands, "waters of the U.S.", or "waters of the State" in the survey area, which is consistent with Final EIR MM Hydro-3. Therefore, there would be no impact on jurisdictional resources and no mitigation would be required.

d) Would the project interfere substantially with the movement of any native resident or migratory fish or wildlife species or with established native resident or migratory wildlife corridors, or impede the use of native wildlife nursery sites?

Within large open space areas in which there are few or no man-made or naturally occurring physical constraints to wildlife movement, wildlife corridors may not yet exist. However, once open space areas become constrained and/or fragmented as a result of urban development or the construction of physical obstacles (such as roads and highways), the remaining landscape features or travel routes that connect the larger open space areas become corridors as long as they provide adequate space, cover, food, and water and do not contain obstacles or distractions (e.g., man-made noise, lighting) that would generally hinder wildlife movement.

The survey area is connected with natural open space within the KHSRA to the north, northwest, and southwest. Wildlife is expected to move between the KHSRA and the survey area. However, the park itself is generally isolated from other areas of open space. Wildlife is expected to be relatively tolerant of human activity due to the survey area's location adjacent to a major intersection and the amount of people currently using the unimproved trail. The proposed Project would remove a limited amount of habitat along the existing trail alignment. Also, construction activity may temporarily deter wildlife from moving through the Project area; however, this effect is expected to be limited due to the short duration of construction (approximately six months). Due to this limited duration, because wildlife are acclimated to human activity, and because the proposed Project would not appreciably alter the extent of habitat available for wildlife movement, the proposed Project's impact on wildlife movement would be less than significant and no mitigation would be required.

e) Would the project conflict with any local policies or ordinances protecting biological resources, such as a tree preservation policy or ordinance?

The County of Los Angeles has a tree ordinance to protect native oak trees (*Quercus* spp.). Although some native coast live oak trees are planted along La Brea Avenue, there are no oak trees on the Project site. Therefore, there would be no impact related to conflict with local policies or ordinances protecting biological resources.

f) Would the project conflict with the provisions of an adopted Habitat Conservation Plan, Natural Community Conservation Plan, or other approved local, regional, or state habitat conservation plan?

There are no Habitat Conservation Plans, Natural Community Conservation Plans, or other conservation plan areas on or adjacent to the survey area. Therefore, there would be no impacts related to conservation plans.

The survey area is within Los Angeles County Significant Ecological Area (SEA) #38 Baldwin Hills (England and Nelson 1976). This SEA was designated because it is one of the last remaining open spaces in the Los Angeles Basin. The description for this SEA states that it should become a major urban park once oil and gas operation cease and the property should be used for light recreational uses. This proposed Project is consistent with the proposed use described in the SEA; therefore, there would be no impact on the SEA. The County of Los Angeles Department of Regional Planning published an updated Draft SEA Map; the Baldwin Hills are not listed as an SEA on this draft map (Los Angeles County Department of Regional Planning 2010).

Adopted Mitigation Measures Applicable to the Proposed Project

Bio-1 Potential effects to native habitats and species should be reviewed at the project-level for specific facilities or Management Plans proposed under the KHSRA General Plan Amendment and mitigation measures shall be considered, including but not limited to:

- Conduct vegetation and wildlife surveys as warranted.
- Site and design facilities/actions to avoid adverse effects to sensitive vegetative communities and wildlife habitats. If avoidance is infeasible, minimize and compensate adverse effects as appropriate.
- Implement a compliance-monitoring program in order to stay within the parameters of CEQA and other pertinent regulations. The compliance-monitoring program would oversee these mitigation measures and would include reporting protocols.
- Implement a natural resource protection program. Standard measures could include construction scheduling, biological monitoring, erosion and sediment control, use of fencing or other means to protect sensitive resources adjacent to construction, topsoil salvage, and revegetation. This could include specific construction monitoring by resource specialists as well as treatment and reporting procedures.
- Implement a noxious weed abatement program. Standard measures could include the following elements: ensure construction-related equipment arrives on-site free of mud or seed- bearing material, certify all seeds and straw material as weed-free, identify areas of noxious weeds pre-construction, treat noxious weeds or noxious weed topsoil prior to construction (e.g., topsoil segregation, storage, herbicide treatment), and revegetate with appropriate native species.

- Develop revegetation plans for the disturbed area and require the use of native species. Revegetation plans should specify seed/plant source, seed/plant mixes, soil preparation, etc. Salvage vegetation should be used to the extent possible.

In addition, as indicated in Mitigation Measure Aes-1, night lighting shall be minimized, and when necessary, lighting shall be shielded and directed downward.

Implementation of the design measure described above would reduce the potential program-level effects to native habitats associated with the implementation of the KHSRA General Plan Amendment.

Bio-2 Potential impacts to special status species should be reviewed at the project-level for specific facilities or Management Plans proposed under the KHSRA General Plan Amendment and mitigation measures shall be considered, including but not limited to:

- Implement Bio-1, above.
- Conduct surveys for rare, threatened, and endangered species as warranted.
- Site and design facilities/actions to avoid adverse effects to rare, threatened, and endangered species. If avoidance is infeasible, minimize and compensate adverse effects to rare, threatened, and endangered species as appropriate and in consultation with the appropriate resource agencies.
- Develop and implement restoration and/or monitoring plans as warranted. Plans should include methods for implementation, performance standards, monitoring criteria, and adaptive management techniques.
- Implement measures to reduce adverse effects of non-native plants and wildlife on rare, threatened, and endangered species.

Implementation of the design measure described above would reduce the potential program-level special status species impacts associated with the implementation of the KHSRA General Plan Amendment.

Repeated from Section 3.8, Hydrology and Water Quality:

Hydro-3 *Potential wetlands impacts should be reviewed at the project level for specific facilities or Management Plans proposed under the KHSRA General Plan Amendment and mitigation measures shall be considered, including but not limited to:*

- *Prior to development, a survey shall be conducted to determine whether there are potential waters of the United States that would be affected by project implementation. If waters of the United States are identified, site and design facilities/actions to avoid adverse effects to wetlands. If avoidance is infeasible, minimize and compensate adverse effects to wetlands in accordance with 404 of the CWA and other applicable wetland protection regulations. Develop and implement restoration and/or monitoring plans as warranted. Plans should include methods for implementation, performance standards, monitoring criteria, and adaptive management techniques.*

Implementation of compliance measure, as described above, would reduce the potential program level wetlands impacts associated with the implementation of the KHSRA General Plan Amendment.

Refined Project-Specific Mitigation Measures

ER Trail-1 The project limits shall be clearly marked prior to the commencement of construction in order to protect native habitats that would not be impacted by construction. In particular, the limits of disturbed California sagebrush scrub and any native trees that would not be impacted shall be flagged/fenced for avoidance. No soils or brush shall be stored in the disturbed California sagebrush scrub area that would not be impacted or within the driplines of native trees. The Biological Monitor shall verify that proper protections have been installed prior to vegetation removal.

During removal of disturbed California sagebrush scrub, a Biologist holding the necessary permit to survey for the coastal California gnatcatcher shall be on site to monitor vegetation removal. The Biologist shall conduct a focused survey the morning of vegetation removal (prior to the start of work) and shall remain on site until all disturbed California sagebrush scrub has been removed. If any coastal California gnatcatchers are observed, the Biologist shall immediately stop all work and contact the U.S. Fish and Wildlife Service (USFWS) for guidance. If coastal California gnatcatcher is present, the County of Los Angeles Department of Public Works shall be required to consult with the USFWS to obtain authorization to impact 0.10 acre (0.01 acre permanent, 0.09 acre temporary) of occupied habitat for this species. Work shall not be allowed to continue until the USFWS has given approval to continue work.

ER Trail-2 To the extent practicable, vegetation clearing will be conducted outside the bird nesting season (which extends from March 15–September 15) and outside the raptor nesting season (which extends February 1 to June 30) to avoid impacting active nests of bird/raptor species. If vegetation clearing is planned to occur during the nesting season, a pre-construction nesting bird/raptor survey shall be conducted by a qualified Biologist within three days prior to vegetation removal. Any active nests observed during survey efforts shall be mapped and the Biologist shall determine an appropriate buffer to protect the active nest based on the sensitivity of the species observed and the location of the nest in relation to construction activities. A minimum of 300 feet shall be required for an active raptor nest. No work shall be allowed within the buffer area until the Biologist determines that the nest is no longer active.

Level of Significance for Proposed Project

Based on the proposed Project description and implementation of the mitigation measures listed above, Project impacts related to biological resources would be less than significant. The proposed Project would not result in a new or substantially more severe impacts related to biological resources than identified in the Final EIR and Addendum No. 1.

3.4 CULTURAL RESOURCES

As discussed in the Final EIR, the KHSRA is located within an area known to contain cultural resources. The Final EIR determined that potential impacts to archaeological and paleontological resources and the potential discovery of human remains during construction activities with development under the KHSRA General Plan Amendment would be less than significant with implementation of adopted MMs Cul-1 through Cul-3. The Final EIR also determined that development under the General Plan Amendment would result in no impacts to historic resources.

Impact Analysis

The following impact analyses derived from Appendix G of the CEQA Guidelines are addressed to determine if the proposed Project would result in new or more severe impacts related to cultural resources than identified in the Final EIR and Addendum No.1.

a) Would the project cause a substantial adverse change in the significance of a historical resource as defined in Section 15064.5?

There are no structures or other built features on the Project site that could potentially be historic. Also, the Final EIR determined that implementation of the General Plan Amendment would result in no impacts to historic resources. There would be no impact to historic resources and no mitigation is required.

b) Would the project cause a substantial adverse change in the significance of an archaeological resource pursuant to Section 15064.5?

As discussed in the Final EIR, there are 18 known archaeological resource sites within a ¼-mile radius of the KHSRA, and excavation activities during development of new facilities under the KHSRA General Plan Amendment have the potential to encounter unknown archaeological resources. Construction of the proposed Project would involve very shallow excavation with depths of between one and two feet below grade and, as such, cultural resources are not expected to be encountered. Nonetheless, this grading would be within native soils so there is always the potential for discovery of unknown archaeological resources. While the program-level analysis presented in the Final EIR did not define the anticipated depth(s) of future excavation activities, because the proposed Project is consistent with the intent of the KHSRA General Plan Amendment (refer to Section 2.7.5) and because the excavation required to implement the proposed Project would be very shallow, the proposed earthmoving activity is within the anticipated scope of the Final EIR. Consistent with the findings of the Final EIR, proposed Project implementation of Final EIR MM Cul-1, which involves monitoring of all subsurface activities (i.e., grading) by a qualified Archaeologist (among other requirements), would reduce potential impacts to archaeological resources to a less than significant level.

c) Would the project directly or indirectly destroy a unique paleontological resource or site or unique geologic feature?

As discussed in the Final EIR, there are two main sedimentary formations that exist within the park that are likely to contain fossils (i.e., paleontological resources); these include Pleistocene marine and marine terrace deposits and Upper Pliocene Marine formations. As discussed above, construction of the proposed Project would involve only shallow grading within surficial soils and would not require excavation of bedrock, including the sedimentary formations within the KHSRA that may contain paleontological resources. Therefore, while encountering paleontological resources during Project construction would be unlikely, the proposed Project would implement Final EIR MM Cul-2, which involves monitoring of all subsurface activities (i.e., grading) by a qualified Paleontologist (among other requirements). Consistent with the findings of the Final EIR, implementation of Cul-2 would reduce potential impacts to paleontological resources to a less than significant level.

d) Would the project disturb any human remains, including those interred outside of formal cemeteries?

As discussed in the Final EIR, no historic cemeteries are known to have existed within the KHSRA; however, this does not preclude the existence of burials of any kind from being

identified during construction or maintenance of development occurring under the KHSRA General Plan Amendment. In the unlikely event of an unanticipated encounter with human remains during grading, the *California Health and Safety Code* and the *California Public Resources Code* require that any activity in the area of a potential find be halted and the Los Angeles County Coroner be notified, as described in Final EIR MM Cul-3. Consistent with the findings of the Final EIR, implementation of Cul-3 would reduce potential impacts related to disturbance of human remains to a less than significant level.

Adopted Mitigation Measures Applicable to the Proposed Project

Cul-1 Potential archaeological resources impacts should be reviewed at the project-level for specific facilities or Management Plans proposed under the KHSRA General Plan Amendment and mitigation measures shall be considered, including but not limited to:

- Subject projects to site-specific planning and compliance in accordance with cultural resource protection laws.
- Site and design facilities/actions to avoid adverse effects to sensitive cultural resources. Subject projects to site-specific planning and compliance in accordance with cultural resource regulations. Conduct archeological site monitoring and routine protection. Conduct data recovery excavations at archeological sites threatened with destruction, where protection or site avoidance during design and construction is infeasible.
- Avoid or mitigate impacts to ethnographic resources. Mitigation could include identification of and assistance in accessing alternative resource gathering areas, continuing to provide access to traditional use and spiritual areas, and screening new development from traditional use areas.
- Continue and formalize ongoing consultations with culturally associated American Indian people. Formalize a parkwide gathering plan and discovery plan for American Indian human remains. Protect known burial sites, and protect sensitive traditional use areas to the extent feasible.
- Conduct surveys for archeological sites, traditional resources, historic sites, structures, and cultural landscape resources as warranted. Surveys and reports shall be prepared in compliance with the recommendations of the Native American Heritage Commission.
- The Department shall provide a qualified archaeologist to monitor any subsurface operations, including but not limited to grading, excavation, trenching, or removal of existing features of the subject property. The archaeologist shall be on site during any activity when new soils are to be moved or exported. The archaeologist shall be authorized to halt the project in the area of the finding and mark, collect, and evaluate any archaeological materials discovered during construction. Copies of any archaeological surveys, studies, or reports of field observation during grading and land modification shall be prepared and certified by the attendant archaeologist and submitted to the California State University at Fullerton (CSUF) Archaeological Information Center. Any artifacts recovered during mitigation shall be deposited in an accredited and permanent scientific or educational institution for the benefit of current and future generations.
- In the event cultural resources are encountered on the park during the course of construction; the findings shall be examined by a qualified archaeologist. If the finding is determined to be an historical or unique archaeological resource,

avoidance measures or appropriate mitigation shall be implemented. Recommendations can then be made for any appropriate procedures to either further investigate or mitigate impacts to those cultural resources that have been encountered. As provided in the CEQA Guidelines, Section 15064.5(f), work could continue on other parts of the park while historical or unique archaeological resource mitigation (if necessary) takes place.

Implementation of the requirements described above would reduce the potential program-level archaeological resources impacts associated with the implementation of the KHSRA General Plan Amendment.

Cul-2 Potential paleontological resources impacts should be reviewed at the project-level for specific facilities or Management Plans proposed under the KHSRA General Plan Amendment and mitigation measures shall be considered, including but not limited to:

- The Department shall provide a qualified paleontological monitor to monitor all subsurface operations, including but not limited to grading, excavation, trenching, or removal of existing features of the subject property. The monitor shall be on site during any activity when new soils are to be moved or exported. The monitor shall be authorized to halt the project in the area of the finding until such specimens may be marked, collected, and evaluated for all paleontological materials discovered during construction. Copies of paleontological surveys, studies, or reports of field observation during grading and land modification shall be prepared and certified by the attendant paleontological monitor and submitted to the Natural History Museum of Los Angeles County. Any fossils recovered during mitigation shall be deposited by an accredited and permanent scientific or educational institution such as the Department, for the benefit of current and future generations.

Implementation of the requirement described above would reduce the potential program-level paleontological resources impacts associated with the implementation of the KHSRA General Plan Amendment.

Cul-3 Potential human remains disturbance impacts should be reviewed at the project-level for specific facilities or Management Plans proposed under the KHSRA General Plan Amendment and mitigation measures shall be considered, including but not limited to:

- In the event human remains are encountered; the Los Angeles County Coroner shall be contacted to determine whether or not investigation of the cause of death is required. In the event the remains are of Native American origin, the Native American Heritage Commission shall be contacted to determine necessary procedures for protection and preservation remains, including reburial, as provided in the CEQA Guidelines, Section 15064.5(e).

Implementation of the requirement described above would reduce the potential program-level human remains disturbance impacts associated with the implementation of the KHSRA General Plan Amendment.

Refined Project-Specific Mitigation Measures

None.

Level of Significance for Proposed Project

Based on the proposed Project description and implementation of the mitigation measures listed above, Project impacts related to cultural resources would be less than significant. The proposed Project would not result in a new or substantially more severe impacts related to cultural resources than identified in the Final EIR and Addendum No. 1.

3.5 GEOLOGY AND SOILS

The Final EIR determined that potential geology and soils impacts related to the following topics would be less than significant with implementation of adopted mitigation measures Geo-1 through Geo-5: (1) new facilities and improvements to existing facilities being subjected to strong ground shaking, which would expose people or structures to adverse effects, including the risk of loss, injury or death as a result of seismic ground failure, liquefaction, earthquake-induced settlement, or landslides; (2) the potential for subsidence for facilities located in the vicinity of the adjacent oilfield; (3) the presence of some soils within the KHSRA that may be unsuitable to support new facilities; (4) construction and maintenance activities; and (5) increased public use, resulting in soil erosion, particularly where located in steep areas with development under the KHSRA General Plan Amendment.

Impact Analysis

The following impact analyses, which are derived from Appendix G of the CEQA Guidelines, are addressed to determine if the proposed Project would result in new or more severe impacts related to geology and soils than identified in the Final EIR and Addendum No.1.

a) Would the project expose people or structures to potential substantial adverse effects, including the risk of loss, injury, or death involving:

   i) Rupture of a known earthquake fault, as delineated on the most recent Alquist-Priolo Earthquake Fault Zoning Map issued by the State Geologist for the area or based on other substantial evidence of a known fault? (Refer to Division of Mines and Geology Special Publication 42.)

   ii) Strong seismic ground shaking?

   iii) Seismic-related ground failure, including liquefaction?

   iv) Landslides?

As discussed in the Final EIR, there are several Alquist-Priolo Earthquake Fault Zones, (associated with branches of the Newport-Inglewood Fault Zone) designated within the KHSRA and that traverse the Project site. As with most of Southern California, the KHSRA is located in a seismically active area and is susceptible to strong ground shaking in the event of an earthquake on any one of numerous active faults in the region. Based on review of seismic hazard maps prepared by the California Geological Survey, the Final EIR determined that (1) the KHSRA is not identified as susceptible to liquefaction and (2) much of the KHSRA is identified as susceptible to seismically induced landslides. Also, the Final EIR determined there are unstable soils within the KHSRA, including areas near abandoned oil wells and slopes susceptible to landslide.

The proposed Project does not involve construction of habitable or other permanent structures that would expose people or structures to risk of adverse effects as a result of an earthquake and secondary seismic hazards. Also, the proposed Project is a continuation of an existing use on the site. Although the proposed Project is expected to increase public use of the site, these

visitors would not be exposed to greater seismic- or soil-related hazards, including ground rupture, ground shaking, landslide, and other ground failure than the existing visitors to the site. The geotechnical constraints of the site have been investigated by the LACDPW Building and Safety division, and the proposed Project would be constructed in compliance with 2010 California Building Code requirements with respect to grading, slopes, drainage, erosion, and other engineering concerns, in accordance with Final EIR MMs Geo-1 and Geo-3. All proposed Project plans and specifications for construction and operation would be reviewed and approved by the County prior to Project implementation. Consistent with the findings of the Final EIR, with implementation of Geo-1 through Geo-4, there would be less than significant impacts related to seismic hazards.

b) Would the project result in substantial soil erosion or the loss of topsoil?

In accordance with Geo-3, to reduce erosion potential, disturbed ground areas along the trail and nearby slopes would be vegetated as provided in the proposed landscape and irrigation plans developed for the Project. Construction of the proposed Project is scheduled to occur from June to November, and would therefore include the beginning of the rainy season, as measured by the County for permit requirements (October 15 to April 15). If the proposed Project includes grading activities within the rainy season at the time of grading permit issuance, the grading permit will not be issued until an approved Erosion Control Plan or details for erosion control are included with the grading plan. Because the proposed Project would involve less than one acre of land disturbance, coverage under the Los Angeles Regional Water Quality Control Board (LARWQCB) National Pollution Discharge Elimination System (NPDES) Construction General Permit would not be required. There would be a less than significant impact related to soil erosion.

c) Would the project be located on a geologic unit or soil that is unstable, or that would become unstable as a result of the project, and potentially result in on-site or off-site landslide, lateral spreading, subsidence, liquefaction, or collapse?

As discussed under Threshold 3.5(a), the proposed Project does not involve construction of habitable structures and is a continuation of an existing use. Also, the proposed Project would not place buildings or underground utilities adjacent to the oil field, a portion of which is located immediately to the west, to avoid potential subsidence hazards, in accordance with Final EIR MM Geo-2. The geotechnical constraints of the site have been investigated by the LACDPW Building and Safety division, and the proposed Project would be constructed in compliance with 2010 California Building Code requirements. All proposed Project plans and specifications for construction and operation would be reviewed and approved by the County prior to Project implementation. Consistent with the findings of the Final EIR, with implementation of Geo-1 through Geo-4, there would be less than significant impacts related to location on unstable geologic unit (i.e., soil engineering hazards).

d) Would the project be located on expansive soil, as defined in Table 18-1-B of the Uniform Building Code (1994), creating substantial risks to life or property?

The Final EIR determined that there are unstable soils within the KHSRA, including potentially expansive soils. As discussed under Threshold 3.5(a), the geotechnical constraints of the site have been investigated by the LACDPW Building and Safety division, and the proposed Project would be constructed in compliance with 2010 California Building Code requirements. All proposed Project plans and specifications for construction and operation would be reviewed and approved by the County prior to Project implementation. Consistent with the findings of the Final EIR, with implementation of Geo-1 through Geo-4, there would be less than significant impacts related to location on potentially expansive soils.

e) Would the project have soils incapable of adequately supporting the use of septic tanks or alternative waste water disposal systems where sewers are not available for the disposal of waste water?

The proposed Project does not include septic tanks or the use of alternative waste water disposal systems, and there would be no impact.

Adopted Mitigation Measures Applicable to the Proposed Project

Geo-1 Potential seismic impacts should be reviewed at the project-level for specific facilities or Management Plans proposed under the KHSRA General Plan Amendment and mitigation measures shall be considered, including but not limited to:

- Geotechnical investigations shall be performed before final designs of any project facilities. The studies shall assess seismic hazards and soil suitability. Recommendations provided in these investigations shall be implemented. Project facilities shall be constructed in accordance with Uniform Building Code earthquake design standards.
- Project facilities located within Alquist-Priolo Fault Zones shall be designed in accordance with Special Publication 117 and the Uniform Building Code.
- Permanent structures shall be located outside of Alquist-Priolo Earthquake Zones and landslide hazard areas identified in the Seismic Hazards Maps when possible.

Implementation of design measures, as described above, would reduce the potential program level seismic impacts associated with the implementation of the KHSRA General Plan Amendment.

Geo-2 Potential ground subsidence impacts should be reviewed at the project-level for specific facilities or Management Plans proposed under the KHSRA General Plan Amendment and mitigation measures shall be considered, including but not limited to:

- Where possible, the project shall avoid placing buildings and underground utilities adjacent to the oil field.

Implementation of the design measure described above would reduce the potential program- level ground subsidence impacts associated with the implementation of the KHSRA General Plan Amendment.

Geo-3 Potential erosion impacts should be reviewed at the project-level for specific facilities or Management Plans proposed under the KHSRA General Plan Amendment and mitigation measures shall be considered, including but not limited to:

- Final Grading Plans shall be designed to minimize soil erosion potential and shall be approved by the County of Los Angeles Department of Public Works or other appropriate agency.
- Steep slopes shall be vegetated to reduce erosion potential.
- The park layout shall be designed to discourage walking or biking on unimproved, steep slopes.
- Conceptual Drainage Plans shall be prepared to accompany grading permit applications.

- A landscaping and irrigation plan shall be developed to minimize erosion potential.

Implementation of design measures and plans, as described above, would reduce the potential program-level erosion impacts associated with the implementation of the KHSRA General Plan Amendment.

Geo-4 Potential unsuitable soils impacts should be reviewed at the project level for specific facilities or Management Plans proposed under the KHSRA General Plan Amendment and mitigation measures shall be considered, including but not limited to:

- Geotechnical investigations shall be performed before final designs of any project facilities. The studies shall assess seismic hazards, slope stability, and soil suitability. Recommendations provided in these investigations shall be implemented.
- A registered engineering geologist shall approve all grading and filling operations.
- A survey shall be conducted for new and abandoned wells to ensure the stability of nearby soils.

Implementation of investigations and design measures, as described above, would reduce the potential program-level unsuitable soils impacts associated with the implementation of the KHSRA General Plan Amendment.

Refined Project-Specific Mitigation Measures

None.

Level of Significance for Proposed Project

Based on the proposed Project description and implementation of the mitigation measures listed above, Project impacts related to geology and soils would be less than significant. The proposed Project would not result in new or substantially more severe impacts related to geology and soils than identified in the Final EIR and Addendum No. 1.

3.6 GREENHOUSE GAS EMISSIONS

As discussed previously, the topic of GHG Emissions was not included as a formal topic in the CEQA Guidelines at the time of preparation of the KHSRA General Plan Amendment and Final EIR, and the Final EIR did not contain a GHG analysis. Therefore, this topic is not addressed as a comparative analysis. However, as discussed in Section 2.7.5, Proposed Project and KHSRA General Plan Amendment Comparison, the proposed Project is consistent with the type and intensity of planned uses within the KHSRA envisioned in the Final EIR. Also, as determined through this Addendum No. 2 analysis, the proposed Project would not result in new or more severe environmental impacts than anticipated in the Final EIR. A quantitative analysis of the proposed Project's estimated construction and operational GHG emissions is provided below.

Addendum No. 1 (2010) included a qualitative analysis of GHG emissions and concluded that construction and operation of the Phase 1 Eastern Ridgeline Trail would not result in new or more severe impacts to the environment due to GHG emissions or create a conflict with an applicable plan, policy, or regulation adopted for the purpose of reducing GHG emissions. As

discussed in the Addendum No. 1, the primary source of GHG emissions for the Phase 1 project would be construction activities; due to the small number of necessary construction vehicles, the relatively small area under construction, and the temporary nature of construction activities, and because operation of the Phase 1 trail would not result in an increase in energy consumption requirements or any additional trips beyond those projected in the Final EIR, Phase 1 construction and operation was not anticipated to result in substantial GHG emissions.

Impact Analysis

This analysis of GHG emissions is based on the following impact analyses derived from Appendix G of the CEQA Guidelines:

a) Would the project generate greenhouse gas emissions, either directly or indirectly, that may have a significant impact on the environment?

The proposed Project was a component of a larger project that was approved based on previously certified KHSRA General Plan Amendment and Final EIR, which was certified on October 12, 2002. At the time of certification, GHG emissions were not part of the required CEQA analysis. Effective March 18, 2010, the State has adopted amendments to the CEQA Guidelines requiring the analysis and mitigation of the effects of GHG emissions in CEQA documents. The CEQA Guidelines regarding GHG emissions do not specifically address situations involving subsequent implementation actions for a project with a previously certified EIR.

GHG emissions and global climate change is not necessarily “new information” since these effects have been generally known for quite some time. Therefore, for this Project, this would not be considered new information under Section 21166 of CEQA, which describes when a climate change analysis is required. The proposed Project is simply implementing a component of a previously approved project and would not allow for any development or uses beyond what was previously authorized. Specifically, as discussed in Section 2.7.5, the proposed Project is consistent with both the type and scope of projects anticipated for development under the KHSRA General Plan Amendment. Also, as analyzed in this Addendum No. 2, construction and operation of the proposed Project would not result in new significant environmental impacts, nor would it result in a substantial increase in the severity of impacts previously identified in the Final EIR. However, for purposes of disclosure, the proposed Project GHG emissions have been estimated and are discussed below.

Description of Greenhouse Gases

GHGs are comprised of atmospheric gases and clouds within the atmosphere that influence the Earth’s temperature by absorbing most of the infrared radiation that rises from the sun-warmed surface and that would otherwise escape into space. This process is commonly known as the “Greenhouse Effect”. GHGs are emitted by natural processes and human activities. The Earth’s surface temperature averages about 58 degrees Fahrenheit (°F) because of the Greenhouse Effect. Without it, the Earth’s average surface temperature would be somewhere around an uninhabitable 0°F. The resulting balance between incoming solar radiation and outgoing radiation from both the Earth’s surface and the atmosphere maintains the planet’s habitability.

GHGs, as defined under the California Global Warming Solutions Act of 2006 (Assembly Bill [AB] 32), include carbon dioxide (CO_2), methane (CH_4), nitrous oxide (N_2O), hydrofluorocarbons (HFCs), perfluorocarbons (PFCs), and sulfur hexafluoride (SF_6). General discussions on climate change often include water vapor, ozone, and aerosols in the GHG category. Water vapor and atmospheric ozone are not formed directly in the construction or

operation of development projects, nor can they be controlled in these projects. Aerosols are not gases. While these elements have a role in climate change, they are not considered by either regulatory bodies (such as the California Air Resources Board [CARB]) or climate change groups (such as the California Climate Action Registry [CCAR]) as gases to be reported or analyzed for control. Therefore, no further discussion of water vapor, ozone, or aerosols is provided.

GHGs are global pollutants and are unlike air pollutants such as ozone, particulate matter, and toxic air contaminants (TACs), which are pollutants of regional and local concern. While air pollutants with localized air quality effects have relatively short atmospheric lifetimes (generally on the order of a few days), GHGs have relatively long atmospheric lifetimes that range from one year to several thousand years. Long atmospheric lifetimes allow for GHGs to disperse around the globe. In addition, the GHG impacts are global, as opposed to the localized air quality effects of criteria air pollutants and TACs.

Since GHGs vary widely in the power of their climatic effects, climate scientists have established a unit called global warming potential (GWP). The GWP of a gas is a measure of both potency and lifespan in the atmosphere as compared to CO_2. For example, since CH_4 and N_2O are approximately 21 and 310 times more powerful than CO_2, respectively, in their ability to trap heat in the atmosphere, they have GWPs of 21 and 310, respectively (CO_2 has a GWP of 1). Carbon dioxide equivalent (CO_2e) is a quantity that enables all GHG emissions to be considered as a group despite their varying GWP. The GWP of each GHG is multiplied by the prevalence of that gas to produce CO_2e.

Proposed Project GHG Emissions

Construction and operational GHG emissions were calculated by using CalEEMod, discussed further in Section 3.2, Air Quality, of this Addendum No. 1, including the assumptions applied in the air quality and GHG emissions modeling. Construction GHG emissions are generated by vehicle engine exhaust from construction equipment, vendor trips, and worker commuting trips. Construction assumptions are described in Section 3.2, Air Quality, and in Appendix A. GHG emissions are commonly expressed as “metric tons of carbon dioxide equivalent (MTCO2e)”.The total estimated construction GHG emissions for the proposed Project would be 325 $MTCO_2e$. Larger quantities of emissions, such as on the State or world scale, are expressed in million metric tons of carbon dioxide equivalent (MMTCO2e). For estimating long-term annual GHG emissions, the SCAQMD has recommended amortizing construction emissions over the life of a project, and a common value for project life is 30 years (SCAQMD 2008). Therefore, the 30-year amortized construction emissions would be approximately 11 $MTCO_2e$/year.

As described fully in Section 3.2, Air Quality, the sole source of operational (long-term) emissions for the proposed Project would be vehicles used by park visitors. As discussed previously, although the proposed Project is not expected to result in substantially more visits to the Eastern Ridgeline trail or the KHSRA as a whole, for purposes of analysis in this Addendum, a conservative estimate of daily traffic was postulated as follows: All of the 28 Upper Lot spaces and ½ of the Houston Park lot spaces (19) would be used by 2 vehicles in a day, with an average of 2 persons per vehicle. This represents approximately 94 vehicle visits in 1 day and approximately 188 one-way trips as a maximum day scenario, representing a weekend day or holiday with good weather. Although some portion of this estimate represents existing visitation, for purposes of this analysis, the entire “worst-case” estimate is used to model emissions associated with proposed Project operation. Accordingly, operational GHG emissions for the proposed Project are the estimated mobile source emissions from park visitors’ vehicles. Operational emissions are estimated at 198 $MTCO_2e$/year.

Combining operational emissions with amortized construction emissions results in a total GHG emissions estimate of 209 $MTCO_2e$/year. This value may be compared with SCAQMD recommended screening thresholds of 3,000 $MTCO_2e$/year for residential and commercial projects and 10,000 $MTCO_2e$/year for industrial projects. Projects with emissions less than the screening thresholds would be considered less than significant. It is noted that, to date, the County of Los Angeles has not adopted a threshold(s) for assessing GHG emissions under CEQA. The total estimated GHG emissions of 209 $MTCO_2e$/year is far below any SCAQMD screening criteria. While the analysis of GHG emissions is not comparative to the Final EIR, this nominal level of estimated emissions would not be considered to contribute, directly or indirectly, to a significant impact on the environment related to GHG emissions and global climate change. It is noted the consideration if GHG emissions is necessarily a cumulative analysis, as no single project could contribute GHG emission capable of affecting the global climate. There would be a less than significant cumulative impact and no mitigation would be required. Also, as noted above, the proposed Project is consistent with both the type and scope of project anticipated for development under the KHSRA General Plan Amendment. Therefore, the proposed Project's GHG emissions would not represent a new impact.

b) Would the project conflict with an applicable plan, policy or regulation adopted for the purpose of reducing the emissions of greenhouse gases?

Relevant GHG Policies and Regulations

Assembly Bill 32

AB 32, the California Global Warming Solutions Act of 2006, recognizes that California is the source of substantial amounts of GHG emissions. The statute states that:

> Global warming poses a serious threat to the economic well being, public health, natural resources, and the environment of California. The potential adverse impacts of global warming include the exacerbation of air quality problems, a reduction in the quality and supply of water to the state from the Sierra snowpack, a rise I n sea levels resulting in the displacement of thousands of coastal businesses and residences, damage to marine ecosystems and the natural environment, and an increase in the incidences of infectious diseases, asthma, and other human health-related problems.

In order to avert these consequences, AB 32 establishes a State goal of reducing GHG emissions to 1990 levels by the year 2020, which is a reduction of approximately 28 percent from forecasted emission levels, with further reductions to follow.

Countywide Energy and Environmental Policy

The Countywide Energy and Environmental Policy (Policy) was adopted by the Los Angeles County Board of Supervisors on January 16, 2007 to provide guidelines for the development and enhancement of energy conservation and environmental programs within County departments. The Policy was also the County's response for the need for energy conservation and reduction in GHG emissions. It directs the County to track its GHG emissions with the California Climate Action Registry and to reduce its facilities' energy consumption by 20 percent by the year 2015. Under this policy, the Los Angeles County Energy Program (LACEP) provides financing for energy efficiency or solar improvements, and the County's Capital Project Program requires all new County buildings (i.e., greater than 10,000 square feet) to be Leadership in Energy & Environmental Design (LEED™) Certified at the Silver Level.

Additionally, the County has pledged to be a "Cool County" by establishing a GHG emissions footprint; developing a GHG mitigation plan; working with local entities to reduce regional GHG emissions by 80 percent by 2050; and supporting federal legislation to raise Corporate Average Fuel Economy (CAFE) standards. In addition, the County has implemented various internal programs on energy conservation, water conservation, waste reduction and recycling, green purchasing and contracting, and alternative fuel vehicle purchasing. On January 13, 2009, the County created an action plan for developing a Comprehensive Renewable Energy Program to develop renewable energy projects on existing County facilities and properties.

Proposed Project Analysis

As discussed above, the total GHG emissions estimate for proposed Project construction and operation is 209 $MTCO_2e$/year, which is considered a nominal amount and would not contribute to a significant impact related to GHG emissions and global climate change. Similarly, due to the nominal amount of GHG emissions, the proposed Project would not interfere with attainment of the goals of applicable policies and regulations adopted for the purpose of reducing GHG emissions, including AB 32 and the Countywide Energy and Environmental Policy. There would be a less than significant impact and no mitigation would be required. As concluded for impact question 3.6(a) above, the proposed Project's GHG emissions would not represent a new impact.

3.7 HAZARDS AND HAZARDOUS MATERIALS

The Final EIR determined that the following potential hazards and hazardous materials impacts would be less than significant with implementation of adopted MMs Haz-1 through Haz-4: (1) construction activities that include the use of hazardous materials, expose hazardous waste that may be present at construction sites, or create fire hazards and (2) increases in public use and an associated increase in traffic within the park resulting in runoff from oil, grease, and fuel products as well as accidental releases of hazardous materials with development under the KHSRA General Plan Amendment.

Impact Analysis

The following impact analyses derived from Appendix G of the CEQA Guidelines are addressed to determine if the proposed Project would result in new or more severe impacts related to hazards and hazardous materials than identified in the Final EIR and Addendum No.1.

a) Would the project create a significant hazard to the public or the environment through the routine transport, use, or disposal of hazardous materials?

The 700-acre Inglewood oil field is located immediately west and south of the KHSRA, and, as shown on Figure 2, Aerial Photograph, a portion of the oil field is located immediately west of the Project site. Since its opening in 1983, the KHSRA has continued to expand slightly by acquiring adjacent, closed, oil fields and this includes the Eastern Ridgeline and the areas of both Phase 1 and Phase 2 of the Eastern Ridgeline trail. Therefore, the Project site soils have the potential to be contaminated as a result of historical oil production on and near the Project site. The Department of Toxic Substances Control (DTSC) has conducted investigations of the Eastern Ridgeline to determine if historical oil production activities have impacted the site.

The DTSC completed a Preliminary Endangerment Assessment (PEA) of the middle section of the Eastern Ridgeline in July 2005, which determined the presence of elevated arsenic, diesel, oil, and methane gas levels in selected samples of surface fill materials. Based on the PEA results, in December 2011, URS Corporation, Inc. (URS), in coordination with the DTSC,

conducted a Supplemental Site Investigation (SSI) of the Eastern Ridgeline to assess the current soil conditions along the proposed Phase 1 and Phase 2 Eastern Ridgeline trail alignments, consistent with Final EIR MM Haz-1. The SSI involved collection and laboratory testing of soil samples within the Eastern Ridgeline area, comparison of the soil testing results to appropriate screening levels, and evaluation of site impacts from historic oilfield operations and the need for a soil management plan. The SSI report was reviewed and approved by the DTSC.

In the SSI, the Eastern Ridgeline is classified into three areas: Upper Ridge, Middle Ridge, and Lower Ridge. Of these, the Lower Ridge corresponds to the Phase 2 Project site. A full description of the SSI's methodology, results, and conclusions can be found in the URS' 2012 *Technical Memorandum: Results of Supplemental Soil Investigation, Kenneth Hahn Eastern Ridgeline Site, 4100 La Cienega Boulevard, Los Angeles California*, which is provided in Appendix B of this Addendum. The following summarizes the results of the SSI related to the Lower Ridge (i.e., the proposed Project).

Three soil borings were advanced within the Lower Ridge near the existing (and proposed) entry gate and vehicle turnaround, and a total of four soil samples (three primary samples and one field duplicate) were collected at a depth of one foot below ground surface (bgs). The soil boring locations for the Lower Ridge area are presented in Figure 9. These samples were analyzed for total petroleum hydrocarbons (TPH) and Title 22 Metals using the appropriate U.S. Environmental Protection Agency (USEPA) method. The laboratory results from the Lower Ridge soil samples are summarized in Table 7.

TABLE 7
SUMMARY OF LOWER RIDGE SOIL SAMPLE ANALYSES

Analytes	PSL	CHHSL	TTLC	Boring I.D.			
Metals (mg/kg)				L-01	L-01 (DUP)	L-02	L-03
Arsenic	12	–	–	ND	ND	ND	ND
Barium	–	5,200	–	–	–	**14.9**	–
Chromium	–	–	2,500	–	–	**1.7**	–
Cobalt	–	660	–	–	–	ND	–
Copper	–	3,000	–	–	–	**0.81**	–
Lead	–	80	–	ND	ND	ND	**0.91**
Mercury	–	18	–	–	–	**0.060**	–
Nickel	–	1,600	–	–	–	**0.62**	–
Zinc	–	23,000	–	–	–	**3.4**	–
Total Petroleum Hydrocarbons (mg/kg)							
Diesel Range	10,000	–	–	ND	ND	ND	ND
Oil Range	10,000	–	–	**42**	**36**	**16**	**65**

mg/kg: milligrams per kilogram; PSL: DTSC Project Screening Levels; CHHSL: California Human Health Screening Level; TTLC: Title 22 Total Threshold Limit Concentration; ND: "non-detect", meaning the concentration is below the USEPA laboratory method detection limit; – : not applicable or not available

Source: URS 2012 (Appendix B).

As shown in Table 7, only trace concentrations of selected metals and low levels of TPH were detected in the Lower Ridge Samples. The SSI reports that detected metals concentrations were all below the screening levels and within background levels for Southern California. While elevated TPH levels were encountered in samples from the Middle Ridge, elevated TPH was not detected within the Lower Ridge samples, and the detected levels are well below the DTSC's PSL for TPH (10,000 milligrams per kilogram [mg/kg]).

Legend

L-1 Lower Ridge Sample (URS, 12/9/2012)

Source: URS 2012

Supplemental Site Investigation Soil Boring Locations

Figure 9

Kenneth Hahn Eastern Ridgeline Project Phase 2

N W E S

BonTerra CONSULTING

(Rev 20120216 CJS) PAS\Projects\CoLADPW\J168\Graphics\EIR_Addendum\Ex9_boring_locations.pdf

D:\Projects\CoLADPW\J168\Graphics\Ex_boring_locations.ai

Based on review of the 2005 PEA and preparation of the 2012 SSI, the SSI concludes there are no unacceptable risks or hazards associated with direct contact to compounds of potential concerns detected in soil at the Eastern Ridgeline, and the these soils do not pose an unacceptable risk to human health based on the future land use (i.e., the proposed trail). This would encompass both construction workers and future trail users. However, as a precaution, the SSI recommends soil management practices to be implemented during grading and construction activities to ensure that potential soil contamination does not pose a significant hazard to the construction crew, which are presented in MM ER Trail-3 below. MM ER Trail-3 is a refinement of Final EIR mitigation measure Haz-1 presented below under "Adopted Mitigation Measures Applicable to the Proposed Project" and which requires that "Potential construction-phase hazardous site impacts should be reviewed at the project-level for specific facilities or Management Plans proposed under the KHSRA General Plan Amendment and mitigation measures shall be considered…". As such, ER Trail-3 implements the requirements of Haz-1 by providing a Project-specific mitigation measure that reflects the potential to encounter known hazardous wastes on the Project site and ensures impacts would be reduced to a less than significant level.

In addition to implementation ER Trail-3, as discussed in the Final EIR, per California Division of Occupational Safety and Health (Cal-OSHA) requirements, a Site Safety Plan must be prepared that establishes policies and procedures to protect workers and the public for construction at sites with known contamination. Implementation of adopted mitigation measures, Project-specific MM ER Trail-3, and Cal-OHSA requirements would ensure that construction workers and the public in the Project area would not be exposed to hazardous materials during construction of the proposed Project, and there would be a less than significant impact.

Operation of the proposed Project would not involve the transport, use, or disposal of hazardous materials, nor would it emit or handle hazardous materials. As discussed above, the SSI conducted at the Project site determined that the proposed recreational trail use would not pose a risk to the public due to historic oil production operations. There would be a less than significant impact related to exposure to hazardous materials during proposed Project operation and no mitigation would be required.

b) Would the project create a significant hazard to the public or the environment through reasonably foreseeable upset and accident conditions involving the release of hazardous materials into the environment?

During construction of the proposed Project, there is a limited risk of accidental release of hazardous materials such as gasoline, oil, or other fluids in the operation and maintenance of construction equipment. These materials are common to typical construction activities and do not pose a significant risk of upset or hazard to the public or environment. Final EIR MM Haz-2 describes required measures to implement, including preparation of a Spill Prevention, Control, and Countermeasure Plan, to prevent accidental releases and to appropriately respond in the event of a release. There would be a less than significant related to accidental release of hazardous materials.

c) Would the project emit hazardous emissions or handle hazardous or acutely hazardous materials, substances, or waste within one-quarter-mile of an existing or proposed school?

There is one school located within ¼ mile of the Project site, the Windsor Hills Math-Science-Aerospace Magnet School, located approximately 0.1 mile southeast of the site across the La Brea Avenue/Stocker Street intersection. As discussed under impact questions 3.7(a) and 3.7(b), with implementation of MM ER Trail-3, a Site Safety Plan must be prepared, per Cal-OSHA requirements, that establishes policies and procedures to protect workers and the

public for construction at sites with known contamination. Implementation of adopted mitigation measures, project-specific MM ER Trail-3, and Cal-OHSA requirements would ensure that construction workers and the public in the Project area, including schools in the site vicinity, would not be exposed to hazardous materials during construction of the proposed Project and there would be a less than significant impact.

d) Would the project be located on a site which is included on a list of hazardous materials sites compiled pursuant to Government Code Section 65962.5 and, as a result, would it create a significant hazard to the public or the environment?

As discussed in the Final EIR, there are no locations within the KHSRA included on the California Hazardous Waste and Substances Sites List, compiled pursuant to Section 65962.5 of the *California Government Code.* There would be no impact and mitigation would not be required.

e) For a project located within an airport land use plan or, where such a plan has not been adopted, within two miles of a public airport or public use airport, would the project result in a safety hazard for people residing or working in the project area?

As discussed in the Final EIR, the KHSRA is not located within an airport land use plan and there would be no impacts related to safety hazards from air traffic.

f) For a project within the vicinity of a private airstrip, would the project result in a safety hazard for people residing or working in the project area?

As discussed in the Final EIR, the KHSRA is not located within the vicinity of a private airstrip, and there would be no impacts related to safety hazards from air traffic.

g) Would the project impair implementation of or physically interfere with an adopted emergency response plan or emergency evacuation plan?

The proposed trail has been designed to support personnel and emergency traffic only and the gated entry on La Brea Avenue would retain adequate space for ingress/egress and turnaround of emergency vehicles, consistent with Final EIR MM Util-1. Also consistent with Util-1, emergency vehicle access shall be maintained at all times during construction phases, both within the KHSRA and during implementation of the proposed intersection improvements. There would be a less than significant impact related to emergency response and evacuation plans.

h) Would the project expose people or structures to a significant risk of loss, injury, or death involving wildland fires, including where wildlands are adjacent to urbanized areas or where residences are intermixed with wildlands?

As discussed in the Final EIR, increased visitation to the KHSRA would, in turn, increase the probability of fires caused by human activity. The KHSRA General Plan Amendment includes management actions for providing additional fire protection, including installation of fire roads and hydrants where necessary and limiting park hours to daytime only, except for scheduled events in controlled areas. The proposed Project does not include construction of any structures or other features that would inherently represent a fire hazard. Also, Final EIR MM Haz-3 describes measures required for contractors to prevent a fire and to respond in the event of a fire during construction activities. There would be a less than significant impact related to wildfire risk.

Adopted Mitigation Measures Applicable to the Proposed Project

Haz-1 Potential construction phase hazardous site impacts should be reviewed at the project-level for specific facilities or Management Plans proposed under the KHSRA General Plan Amendment and mitigation measures shall be considered, including but not limited to:

- The Department shall incorporate into construction contract specifications the requirement that in the event that known or previously unidentified hazardous substances are encountered during construction, the contractor has a contingency plan for sampling and analysis of potentially hazardous substances, and coordination with the appropriate regulatory agencies. Any site investigations or remediations shall be performed in accordance with applicable laws.

Also implement Mitigation Measure Air-1 to abide by SCAQMD Rule 403 (Fugitive Dust Abatement). Implementation of this measure would control fugitive dust and reduce the potential for inhalation of any contaminated dust during soil disturbing activities.

Implementation of the measure described above would reduce the potential program-level construction phase hazardous sites impacts associated with the implementation of the KHSRA General Plan Amendment.

Haz-2 Potential construction phase hazardous materials release impacts should be reviewed at the project-level for specific facilities or Management Plans proposed under the KHSRA General Plan Amendment and mitigation measures shall be considered, including but not limited to:

- The Department shall prepare a Spill Prevention, Control, and Countermeasure Plan that requires all transport, storage, and handling of construction-related hazardous materials in a manner consistent with relevant regulations and guidelines, including those recommended and enforced by the California Department of Transportation, RWQCB, and Los Angeles County. Recommendations may include, but are not limited to:
  - Transporting, storing, and handling materials in appropriate and approved containers, using the applicable federal, state, and/or local regulatory agency protocols.
  - Maintaining required clearances.
  - Storing all reserve fuel supplies only within the confines of a designated construction staging area or designated Park maintenance facilities.
  - Installing barriers or fencing around drilling pits to entrap all boring fluids.
  - Locating a vacuum truck on-site periodically remove drilling fluids.
  - Refueling equipment only within designated contained areas within the designated construction staging area or designated Park maintenance facilities.
  - Regularly inspecting all construction vehicles and directional drilling equipment for leaks.

- The General Plan Amendment shall also require that the park and all contractors immediately control the source of any leak. The Plan shall be enforced through contractual obligations and through daily construction site monitoring. The Spill Prevention, Control, and Countermeasure Plan shall include measures to be taken in the event of an accidental spill. In the event of any spill or release of any chemical in any physical form that occurs on or immediately adjacent to the job site during construction, the contractor shall be required to immediately contain any spill utilizing appropriate spill containment and countermeasures and to immediately notify the park Supervisor and operations staff.
- The Department shall incorporate into construction contract specifications the requirement that construction staging areas be designed to contain runoff so that contaminants such as oil, grease, and fuel products do not drain towards receiving waters and soils. Heavy-duty construction equipment should not be stored overnight adjacent to a potential receiving water or high-use recreation area; however, if necessary, drip pans shall be placed beneath the machinery engine block and hydraulic systems.

Implementation of the measures described above would reduce the potential program-level construction phase hazardous materials release impacts associated with the implementation of the KHSRA General Plan Amendment.

Haz-3 Potential construction phase fire hazard impacts should be reviewed at the project-level for specific facilities or Management Plans proposed under the KHSRA General Plan Amendment and mitigation measures shall be considered, including but not limited to:

- The Department shall incorporate into construction contract specifications the following requirements:
  - All dry brush shall be removed from the project construction area, and immediate vicinity.
  - All equipment shall be provided with spark arresters, except those exempted by regulation.
  - During periods of high fire danger, as determined by local firefighting agencies, the contractor shall provide a water truck on-site.
  - In the event that project construction ignites a fire, the contractor shall notify local firefighting agencies immediately.

Implementation of requirements described above would reduce the potential program-level construction phase fire hazard impacts associated with the implementation of the KHSRA General Plan Amendment.

Repeated from Section 3.14, Public Services:

Util-1 *Potential fire protection services impacts should be reviewed at the project-level for specific facilities or Management Plans proposed under the KHSRA General Plan Amendment and mitigation measures shall be considered, including but not limited to:*

- *Individual actions shall comply with all applicable State and local codes and ordinances. Requirements may relate to automatic fire extinguishing systems and smoke detectors.*

- *Roofs of new structures shall have a Class A rating to mitigate problems that may arise as a result of grassland-urban interface.*
- *Requirements for emergency vehicle access shall be incorporated into project design, including access to physical structures and fire hydrants. Such requirements include road grade and lane width, paving of access roads, curb painting, emergency breakaway gates, vertical clearance, turning radii, turn-around areas, and signage.*
- *Water flow requirements and fire hydrant specifications shall be met. All fire hydrants shall be in place prior to construction of any facilities.*
- *Emergency vehicle access shall be maintained at all times during construction phases.*
- *Access for Fire Department apparatus and personnel to and into all structures shall be required.*

Implementation of the requirements described above would reduce the potential program-level fire protection services impacts associated with the implementation of the KHSRA General Plan Amendment.

Refined Project-Specific Mitigation Measures

ER Trail-3 To ensure that potential soil contamination from historic oil production activities on the project site does not pose a significant hazard to the construction crew, the following soil management practices shall be implemented:

- Field oversight of grading operations, including spot checks of soils with a photoionization detector (PID) for VOCs and x-ray fluorescence (XRF) for metals, is recommended with DTSC concurrence.
- Direct contact of TPH-contaminated soils, exceeding 10,000 mg/kg as identified during the 2005 PEA and the current SSI, by human bodies shall be avoided (due to aesthetic or odor concerns). All construction and maintenance workers shall be trained to avoid direct contact with TPH-contaminated soils (e.g., wearing plastic or rubber gloves).
- Any on-site, TPH-contaminated soils exposed or excavated may remain on site; however, at least two feet of clean fill material (imported or from on-site sources) shall be placed over the TPH-contaminated areas where potential contact may occur. With a cap of two feet of clean fill, no direct contact or potential health risks would be anticipated for the Site's intended use, namely recreational use of trails.
- Proper disposal requirements imposed by the disposal facility shall be followed if off-site disposal of TPH contaminated or stockpiled soils is planned.
- While no unacceptable risks or hazards were identified for the intended land use, namely recreational use of trails, any other use of the Site shall require additional site characterization and a human health risk evaluation.
- Enclosed structures (e.g., restrooms) shall not be constructed on site due to a potential for methane vapor intrusion and accumulation, unless otherwise specially approved by DTSC. Any future structures shall require additional characterization (e.g., soil gas survey) and evaluation of the potential for vapor intrusion, including the potential for accumulation of explosive levels of methane.

Level of Significance for Proposed Project

Based on the proposed Project description and implementation of the mitigation measures listed above, Project impacts related to hazards or hazardous materials would be less than significant. The proposed Project would not result in a new or substantially more severe impacts related to hazards or hazardous materials than identified in the Final EIR and Addendum No. 1.

3.8 HYDROLOGY AND WATER QUALITY

The Final EIR determined that the following potential hydrology and water quality impacts would be less than significant with implementation of adopted mitigation measures Hydro-1 through Hydro-3: (1) increased impervious surfaces that would increase runoff and that could exceed the capacity of the existing drainage system (2) construction and operation activities and increased public use that could result in the addition of pollutants and sedimentation to surface water runoff and result in erosion; and (3) construction activities and the location of park facilities could result in impacts to wetlands if located within the KHSRA. The Final EIR also determined that development under the KHSRA General Plan Amendment would result in no impacts related to groundwater or placement of structures within a 100-year floodplain.

Impact Analysis

The following impact analyses derived from Appendix G of the CEQA Guidelines are addressed to determine if the proposed Project would result in new or more severe impacts related to hydrology and water quality than identified in the Final EIR and Addendum No.1.

a) Would the project violate any water quality standards or waste discharge requirements?

Implementation of the proposed Project would involve temporary (one to two years) of irrigation using potable water supplied by the Los Angeles Department of Water and Power (LADWP). LADWP's potable water is required to meet applicable State and federal water quality regulations. Therefore, the introduction of irrigation onto the site using potable water would not result in violation of water quality standards or otherwise degrade water quality. There are no other potential sources of water quality pollutants associated with the proposed Project that are not already present on the site. There would be no impact to water quality standards and no mitigation would be required.

b) Would the project substantially deplete groundwater supplies or interfere substantially with groundwater recharge such that there would be a net deficit in aquifer volume or a lowering of the local groundwater table level (e.g., the production rate of pre-existing nearby wells would drop to a level which would not support existing land uses or planned uses for which permits have been granted?

The Baldwin Hills are located at the junction of three major groundwater basins that underlie the coastal plains, and rainfall that infiltrates the permeable sediments within the KHSRA migrate through the dipping strata to the groundwater basins outside the hills. As discussed in Section 2.7, Project Description, the proposed trail would be comprised of an approximate six-inch-thick layer of stabilized decomposed granite or equivalent alternate over an aggregate base, and would therefore remain permeable. Runoff would continue to infiltrate into the soil or flow overland into the storm drainage system in La Brea Avenue, and there would be no demonstrable change in the rate or volume of runoff from the Project site. As such, the proposed Project would not interfere substantially with groundwater recharge or otherwise deplete groundwater supplies. There would be no impact to groundwater and no mitigation would be required.

c) Would the project substantially alter the existing drainage pattern of the site or area, including through the alteration of the course of a stream or river, in a manner that would result in substantial erosion or siltation on site or off site?

As discussed in the Final EIR, the KHSRA is within the Ballona Creek Watershed, and hillsides drain eventually into both Ballona Creek, a channelized portion of which is located to the west of the KHSRA, and its tributary, Centinela Creek, through the Ballona Wetlands and then into Santa Monica Bay. There are numerous small watersheds within the KHSRA; the eastern watershed, which includes the Project site, flows down the steep hillsides into culverts and collection systems along La Brea Avenue. The unpaved nature of most of the KHSRA results in the majority of storm water percolating into the soil, rather than flowing over streets and highways and collecting the associated pollutant load. The Project site is located approximately 2.5 miles east of Ballona Creek, and therefore does not drain or percolate directly into this drainage feature.

Grading activities have the potential to contribute minor amounts of additional sediment into existing site runoff. As discussed above in Section 3.5, Geology and Soils, construction of the proposed Project is scheduled to occur from June to November, and would therefore include the beginning of the rainy season, as measured by the County for permit requirements (October 15 to April 15). If the proposed Project includes grading activities within the rainy season at the time of grading permit issuance, the grading permit will not be issued until an approved Erosion Control Plan or details for erosion control are included with the grading plan. The proposed grading plan describes the minimum erosion-control Best Management Practices (BMPs), derived from, but not limited to, the *California Storm Water Best Management Practices Handbook*, that would be implemented during construction, consistent with Final EIR mitigation measure Hydro-2. Because the proposed Project would involve less than one acre of land disturbance, coverage under the LARWQCB's NPDES Construction General Permit would not be required.

The proposed grading plan incorporates drainage requirements and has been designed to ensure the stability of the trail and the adjacent slopes in accordance with applicable code requirements, and must be reviewed and approved by County prior to issuance of a grading permit, consistent with Final EIR MM Hydro-1. Subsequent to grading, disturbed ground areas along the trail and nearby slopes would be vegetated as provided in the proposed landscape and irrigation plans developed for the Project. With proposed Project implementation, sources of runoff from the Project site would include rain (i.e., storm water) and irrigation water. The proposed Project would be temporarily (approximately one to two years) irrigated with potable water via a tie-in to an existing four-inch water mainline that would extend from Phase 1 of the Eastern Ridgeline Trail project. As discussed in Section 2.7, Project Description, the proposed trail would be comprised of an approximate six-inch-thick layer of stabilized decomposed granite or equivalent alternate over an aggregate base, and would therefore remain permeable. Runoff would continue to infiltrate into the soil or flow overland into the storm drainage system in La Brea Avenue, and there would be no demonstrable change in the rate or volume of runoff from the Project site. Also, as discussed in Section 3.3, Biological Resources, there are no wetlands on the Project site, as determined by the biological resource survey performed on the Project site, consistent with Final EIR MM Hydro-3.

The proposed Project does not involve creation of impervious surfaces that would substantively alter the existing drainage pattern on the Project site, and would not result in on- or off-site erosion or siltation. There would be a less than significant impact to drainage patterns and no mitigation would be required.

d) Would the project substantially alter the existing drainage pattern of the site or area, including through the alteration of the course of a stream or river, or substantially increase the rate or amount of surface runoff in a manner that would result in flooding onsite or offsite?

As discussed under Threshold 3.8(c), the proposed Project does not involve creation of impervious surfaces that would substantively alter the existing drainage pattern on the Project site, and would not result in on- or off-site flooding. There would be a less than significant impact to drainage patterns and no mitigation would be required.

e) Would the project create or contribute runoff water which would exceed the capacity of existing or planned storm water drainage systems or provide substantial additional sources of pollutant runoff?

As discussed under Threshold 3.8(c), with implementation of the proposed Project, runoff from the site would continue to infiltrate into the soil or flow overland into the storm drainage system in La Brea Avenue, and there would be no demonstrable change in the rate or volume of runoff from the Project site. As discussed under Threshold 3.8(a), the introduction of irrigation onto the site using potable water would not degrade water quality. There are no other potential sources of water quality pollutants associated with the proposed Project that are not already present on the site. There would be no impact to storm water drainage systems and no mitigation would be required.

f) Would the project otherwise substantially degrade water quality?

As discussed under Threshold 3.8(a), the introduction of irrigation onto the site using potable water would not degrade water quality. There are no other potential sources of water quality pollutants associated with the proposed Project that are not already present on the site. There would be no impact and no mitigation would be required.

g) Would the project place housing within a 100-year flood hazard area as mapped on a federal Flood Hazard Boundary or Flood Insurance Rate Map or other flood hazard delineation map?

As discussed in the Final EIR, the KHSRA is entirely outside the 100-year flood plain designated by the Federal Emergency Management Agency (FEMA). There would be no impact from flooding and no mitigation would be required.

h) Would the project place within a 100-year flood hazard area structures which would impede or redirect flood flows?

As discussed in the Final EIR, the KHSRA is entirely outside the 100-year flood plain designated by the Federal Emergency Management Agency (FEMA). There would be no impact from flooding and no mitigation would be required.

i) Would the project expose people or structures to a significant risk of loss, injury, or death involving flooding, including flooding as a result of the failure of a levee or dam?

There are no upstream reservoirs that could result in inundation of the proposed Project. There would be no impact related to failure of a dam or levee and no mitigation would be required.

j) Would the project cause inundation by seiche, tsunami, or mudflow?

There are no water features on or near the Project site and the Project site is located approximately six miles inland of the Pacific Ocean. Therefore, there would be no impacts related to seiche, mudflows, or tsunamis, and no mitigation would be required.

Adopted Mitigation Measures Applicable to the Proposed Project

Hydro-1 Potential runoff and downstream flooding impacts should be reviewed at the project-level for specific facilities or Management Plans proposed under the KHSRA General Plan Amendment and mitigation measures shall be considered, including but not limited to:

- Park improvements shall include upgrading of storm water drainage facilities to accommodate increased runoff volumes where necessary. These upgrades may include the construction of detention basins or structures that will delay peak flows and reduce velocity. System designs shall be designed to eliminate increases in peak flow rates from current levels.
- A drainage plan shall be included with grading plan applications. Drainage systems shall be designed to maximize the use of detention basins, vegetated areas, and velocity dissipaters to reduce peak flows where possible.

Implementation of storm drainage measures, as described above, would reduce the program level potential runoff and downstream flooding impacts associated with the implementation of the KHSRA General Plan Amendment.

Hydro-2 Potential water quality impacts should be reviewed at the project-level for specific facilities or Management Plans proposed under the KHSRA General Plan Amendment and mitigation measures shall be considered, including but not limited to:

- New facilities shall include water quality control features such as detention basins and vegetated buffers, to prevent pollution of adjacent water resources by runoff. Wherever feasible, detention basins shall be equipped with oil and grease traps and will be cleaned regularly.
- Parking lots shall be equipped with runoff treatment systems in compliance with Standard Urban Storm Water Mitigation Plan regulations.
- Storm water drainage systems shall be equipped to collect the anticipated increases in trash loads. The systems shall assist in reducing the park's trash contribution to Ballona Creek from existing levels.
- Operational best management practices for street cleaning, litter control, and catch basin cleaning shall be routinely implemented to prevent water quality degradation.
- Storm Water Pollution Prevention Plans shall be submitted to the SWRCB prior to the commencement of construction activities. Plan requirements, including on-site soil and dust control Best Management Practices shall be implemented to minimize construction site erosion. Best Management Practices shall be established and implemented in compliance with the Los Angeles County Storm Water Ordinance.
- A Pesticide Management Plan shall be established to regulate the storage and application of pesticides to protect water quality.

Implementation of the features, systems, and practices described above would reduce the potential program-level water quality impacts associated with the implementation of the KHSRA General Plan Amendment.

Hydro-3 Potential wetlands impacts should be reviewed at the project level for specific facilities or Management Plans proposed under the KHSRA General Plan Amendment and mitigation measures shall be considered, including but not limited to:

- Prior to development, a survey shall be conducted to determine whether there are potential waters of the United States that would be affected by project implementation. If waters of the United States are identified, site and design facilities/actions to avoid adverse effects to wetlands. If avoidance is infeasible, minimize and compensate adverse effects to wetlands in accordance with 404 of the CWA and other applicable wetland protection regulations. Develop and implement restoration and/or monitoring plans as warranted. Plans should include methods for implementation, performance standards, monitoring criteria, and adaptive management techniques.

Implementation of compliance measure, as described above, would reduce the potential program level wetlands impacts associated with the implementation of the KHSRA General Plan Amendment.

Refined Project-Specific Mitigation Measures

None.

Level of Significance for Proposed Project

Based on the proposed Project description and implementation of the mitigation measures listed above, Project impacts related to hydrology and water quality would be less than significant. The proposed Project would not result in a new or substantially more severe impacts related to hydrology and water quality than identified in the Final EIR and Addendum No. 1.

3.9 LAND USE AND PLANNING

The Final EIR stated that potential land use and planning impacts related to existing land use and zoning designations with development under the KHSRA General Plan Amendment would be less than significant with implementation of adopted MM Plan-1. The Final EIR determined that potential increases in public use and the addition of new facilities would not disrupt or divide the physical arrangement of established surrounding uses; would be compatible with adjacent land uses; would not conflict with established recreational educational, religious, or scientific uses; and would not affect the existing character of the vicinity, resulting in less than significant impacts. The Final EIR also determined that the KHSRA General Plan Amendment would not affect mineral operations on adjacent lands, and there are no agricultural resources in the KHSRA.

Impact Analysis

The following impact analyses derived from Appendix G of the CEQA Guidelines are addressed to determine if the proposed Project would result in new or more severe impacts related to land use and planning than identified in the Final EIR and Addendum No.1.

a) Would the project physically divide an established community?

The KHSRA General Plan Amendment acknowledges that implementation of new and improved recreational facilities would be expected to increase public use of the KHSRA. Accordingly, the proposed Project is anticipated to result in increased public use of the Eastern Ridgeline trail. Consistent with the findings of the Final EIR, the increase in public use of the site as a result of the proposed Project would not disrupt or divide the physical arrangement of established surrounding uses. There would be no impact from division of a community and no mitigation would be required.

b) Would the project conflict with any applicable land use plan, policy, or regulation of an agency with jurisdiction over the project (including, but not limited to the general plan, specific plan, local coastal program, or zoning ordinance) adopted for the purpose of avoiding or mitigating an environmental effect?

As discussed in Section 2.6, Existing Conditions, the Project has a County General Plan land use designation of Open Space (O), and is zoned A-2 (Heavy Agricultural). The A-2 zone allows "Parks, playgrounds and beaches, with all appurtenant facilities customarily found in conjunction therewith" as permitted uses. The proposed Project is consistent with these land use policies, as per Final EIR MM Plan-1, and would not require a General Plan amendment or a zone change.

As discussed in the Final EIR, the intention of the KHSRA General Plan Amendment is to provide for the continuation of existing uses on public trails and access sites, and to provide for the establishment of new public use opportunities. In addition, the General Plan Amendment calls for provision of universal access to recreational facilities and trails. The proposed Project is consistent with the KHSRA General Plan Amendment because it provides for the continued use of the Eastern Ridgeline trail, but with ADA access to allow universal access.

The Project site is within a Resource Protection Management Zone and Eastern Ridgeline Management Area, established by the KHSRA General Plan Amendment. The proposed Project components are allowed uses in the Resource Protection Management Zone, including hiking, photography and nature study, vehicular roads or trails (where they do not adversely affect resources), appropriate visitor amenities (e.g., drinking water, rest areas), and utilities, such as the irrigation water line, where they are screened from view. The proposed Project is also consistent with the objectives of the Eastern Ridgeline Management Area, which focus on the protection of natural habitat, wildlife, and scenic views while developing appropriate public access.

As discussed in the Final EIR, the KHSRA is not included in the California Resources Agency Farmland Mapping and Monitoring Program and there are no agricultural resources located in the Project area. Also, while the KHSRA is generally within the area designated as the Inglewood Oil Field, oil production does not occur within the park. Therefore, consistent with the findings of the Final EIR, the proposed Project would result in no impacts related to conflict with any applicable land use plan, policy, or regulation; agricultural resources; or ongoing oil (i.e., mineral) production in adjacent areas.

c) Would the project conflict with any applicable habitat conservation plan or natural community conservation plan?

There are no habitat conservation plans or natural community conservation plans applicable to the Project area, and there would be no impact.

Adopted Mitigation Measures Applicable to the Proposed Project

Plan-1 Potential plans and policies impacts should be reviewed at the project-level for specific facilities or Management Plans proposed under the KHSRA General Plan Amendment and mitigation measures shall be considered, including but not limited to:

- Development should be consistent with the existing land use and zoning designation of the applicable jurisdiction. If required, request a land use plan and/or zoning amendment from applicable jurisdictions, including the City of Culver City, for newly acquired parcels.

Implementation of the measure described above would reduce the potential program-level plans and policies impacts associated with the implementation of the KHSRA General Plan Amendment.

Refined Project-Specific Mitigation Measures

None.

Level of Significance for Proposed Project

Based on the proposed Project description and implementation of the MMs listed above, Project impacts related to land use and planning would be less than significant. The proposed Project would not result in a new or substantially more severe impacts related to land use and planning than identified in the Final EIR and Addendum No. 1.

3.10 NOISE

The Final EIR determined that the following potential noise impacts would be less than significant with implementation of adopted mitigation measures Noise-1 and Noise-2: (1) construction activities that exceed the regulatory requirements of Los Angeles County or the cities of Culver City and Los Angeles and (2) the addition of new noise sources within the KHSRA, depending on the size and location of potential facilities and uses with development under the KHSRA General Plan Amendment.

Impact Analysis

The following impact analyses derived from Appendix G of the CEQA Guidelines are addressed to determine if the proposed Project would result in new or more severe impacts related to noise than identified in the Final EIR and Addendum No.1.

a) Would the project cause exposure of persons to or generation of noise levels in excess of standards established in the local general plan or noise ordinance, or applicable standards of other agencies?

The primary source of noise in the Project area is vehicle traffic on La Brea Avenue and Stocker Street. As discussed in the Final EIR, other noise sources in the KHSRA include vehicles traveling within the KHSRA, construction equipment, generators, radios, and maintenance equipment (i.e., mowers and chainsaws). The frequency of source use and the location of these sources vary both by season and reason for use.

The nearest off-site noise-sensitive receptor to the Project site is Norman O. Houston Park, located approximately 150 feet to the east at the nearest point of proposed construction activities across La Brea Avenue. Ruben Ingold Park is located further to the east. The Windsor

Hills Math-Science-Aerospace Magnet School is located approximately 0.1 mile southeast of the site across the La Brea Avenue/Stocker Street intersection (the Five Points intersection), and the nearest residences are located immediately east of the school on Mt. Vernon Drive.

As discussed in the Final EIR, construction of individual projects under the KHSRA General Plan Amendment would result in temporary, intermittent increases in ambient noise levels. During construction of the proposed Project, the highest noise levels would occur with the operation of heavy construction equipment such as excavators and bulldozers, which can generate maximum noise levels (L_{max}) of up to 85 A-weighted decibels (dBA) at 50 feet.[3] The noise experienced at a receptor depends on the distance between the source and the receptor; the presence or absence of noise barriers and other shielding features; and the amount of noise attenuation (lessening) provided by the intervening terrain. For point or stationary sources (such as construction equipment), a noise reduction of 6.0 to 7.5 dBA is experienced for each doubling of the distance from the source.

Construction of the proposed Project would be required to comply with Section 12.08 of the County of Los Angeles Code (County Code), the County's Noise Ordinance. Section 12.08.440 of the County Code prohibits construction noise between the hours of 7:00 PM and 7:00 AM on weekdays, and at any time on Sunday or a federal holiday if it creates a disturbance across a residential or commercial property line. The County also sets the following daytime (Daily, except Sundays and legal holidays, 7:00 AM to 8:00 PM) noise level limits: at single-family residences, the maximum noise levels from mobile equipment (non-scheduled, intermittent, short-term operations for less than 30 days), is not to exceed 75 dBA; and the maximum noise level limit from stationary equipment (repetitively scheduled and relatively long-term operations of ten days or more) at a single-family residence is 60 dBA. Also, the proposed Project would implement Final EIR MM Noise-1, which requires construction noise-control measures such as a compliance monitoring program; installation of noise mufflers on equipment; and preferential use of hydraulically- or electrically-powered equipment wherever possible.

Based on a construction noise level of 85 dBA and assuming a noise attenuation of 6 dBA per doubling of distance, with no consideration of noise generated by traffic on La Brea Avenue and Stocker Street between the Project site and surrounding off-site receptors, the maximum noise level from mobile equipment at Norman O. Houston Park (150 feet to the east) would be approximately 75 dBA and potentially lower with application of noise-control measures on the construction equipment. The County of Los Angeles does not define an acceptable noise level for parks. However, the noise levels experienced at the nearest school and residences located farther from the Project site would be even lower and would not, therefore, violate the applicable noise standard (75 dBA at single-family residences). There would be no pile driving or rock blasting (which can result in high noise levels and substantial vibration) needed for construction of the proposed Project. Therefore, construction of the proposed Project would not expose persons to noise levels exceeding standards, excessive groundborne vibration, or a substantial temporary increase in ambient noise levels through compliance with the County Code and MM Noise-1, and there would be a less than significant impact.

b) Would the project cause exposure of persons to or generation of excessive groundborne vibration or groundborne noise levels?

---

[3] L_{max} means the maximum A-frequency-weighted sound level (decibels); for construction equipment, L_{max} usually occurs during short intervals when the equipment is at maximum power.

As discussed under Threshold 3.10(a), construction of the proposed Project would not expose persons to excessive groundborne vibration or noise levels through compliance with the County Code and MM Noise-1. There would be a less than significant impact related to groundborne vibration or noise.

c) Would the project cause a substantial permanent increase in ambient noise levels in the project vicinity above levels existing without the project?

As discussed in Section 2.7, Project Description, implementation of the proposed Project would be expected to increase public visitation to the KHSRA, as anticipated in the Final EIR. The existing numbers of visits to the KHSRA are not calculated and, therefore, the specific change in visitation level cannot be feasibly quantified. However, because the proposed Project would continue to provide a passive recreational feature and based on the available parking in the immediate area, the proposed Project is not expected to result in substantially more visits to the Eastern Ridgeline trail or the KHSRA as a whole. However, for purposes of analysis in this Addendum, a conservative, high level of traffic during daily visitation on a weekend or holiday of 94 vehicle visits and 188 one-way trips was estimated based on the available parking, as discussed further in Section 3.2, Air Quality.

As discussed above, the most prominent existing noise source at the site is traffic, and the primary noise source associated with proposed Project operation would also be traffic. The smallest noise level increment that is detectable to the average person is 3 dBA. Therefore, this metric will be used to assess the potential change in ambient noise levels from proposed Project operation. As discussed in the Final EIR, a doubling in traffic volume of is required to increase ambient noise levels by 3 dBA. The addition of approximately 188 vehicle trips over the course of a day to the existing traffic volumes on La Brea Avenue and Stocker Street would not come close to doubling traffic levels. Therefore, the worst-case daily visitation anticipated for the proposed Project would not result in increased mobile source (i.e., vehicle) noise that would be audible at the Project site or surrounding areas. Also, the proposed Project would implement Final EIR MM Noise-2, which requires compliance with the local noise ordinances, such as for maintenance equipment use, scheduling of recreational events, and educational field trip visits. The proposed Project does not involve new stationary noise sources; existing stationary source noise such as visitors and maintenance equipment would be similar to existing conditions. Therefore, operation of the proposed Project would not expose persons to a substantial permanent increase in ambient noise levels. There would be a less than significant impact related to ambient noise levels.

d) Would the project cause a substantial temporary or periodic increase in ambient noise levels in the project vicinity above levels existing without the project?

As discussed under Threshold 3.10(a), construction of the proposed Project would not expose persons to a substantial temporary increase in ambient noise levels through compliance with the County Code and MM Noise-1. There would be a less than significant impact related to ambient noise levels.

e) For a project located within an airport land use plan or, where such a plan has not been adopted, within two miles of a public airport or public use airport, would the project expose people residing or working in the project area to excessive noise levels?

As discussed in the Final EIR, the KHSRA does not fall within the 65 dBA Community Noise Equivalent Level (CNEL) contour of any of the region's major airports, though aircraft from Los Angeles International Airport may fly over. Therefore, consistent with the findings of the

Final EIR, the Project site is not located within an airport land use plan such that it would expose visitors or employees to noise levels greater than 65 dBA and there would be no impact.

f) For a project within the vicinity of a private airstrip, would the project expose people residing or working in the project area to excessive noise levels?

As discussed in the Final EIR, the Project site is not located within the vicinity of a private airstrip and would not expose visitors or employees to excessive noise levels. There would be no impact.

Adopted Mitigation Measures Applicable to the Proposed Project

Noise-1 Potential construction noise impacts should be reviewed at the project-level for specific facilities or Management Plans proposed under the KHSRA General Plan Amendment and mitigation measures shall be considered, including but not limited to:

- Implement a compliance-monitoring program in order to stay within the parameters of project-specific compliance documents. The compliance-monitoring program would oversee these mitigation measures and would include reporting protocols. The compliance-monitoring program may entail posting signs at construction sites that include permitted construction days and hours, and a day and evening contact number for the job site. For some projects it may also be necessary to appoint an enforcement manager to respond to and track noise complaints. Further, a pre-construction meeting may be needed in which the job inspectors and the general contractor/on-site project manager confirm noise mitigation measures.
- Impact tools used for project construction shall be hydraulically or electrically powered wherever possible. However, where use of pneumatic tools is unavoidable, an exhaust muffler on the compressed-air exhaust shall be used; this muffler can lower noise levels from the exhaust by up to 10 dBA. External jackets on the tools themselves shall be used where feasible, which could achieve a reduction of 5 dBA. Quieter procedures shall be used, such as drills rather than impact equipment, whenever feasible.
- Noise control measures shall be applied to construction equipment. Equipment and trucks used for project construction shall utilize normal noise control techniques (e.g., mufflers in good working order).
- Construction equipment shall not be operated during sensitive times of the day. Seasonal time constraints may also need to be implemented.
- Plan construction activities so that additive noise is minimized (e.g., avoid concurrent use of loud construction equipment) and that minimizes the duration in which a sensitive receptor is affected by noise.
- Take appropriate measures to control pedestrian access to active construction areas. Recreational users should be kept a at safe distance from the operation of construction equipment.
- Limit the proximity of construction noise to sensitive receptors. Stationary noise sources, such as diesel generators, shall be located as far from sensitive receptors as possible. Haultrucks and other construction equipment shall be restricted to routes that practicably avoid sensitive receptors.

Implementation of requirements described above would reduce the potential program-level construction noise impacts associated with the implementation of the KHSRA General Plan Amendment.

Noise-2 Potential operational noise impacts should be reviewed at the project-level for specific facilities or Management Plans proposed under the KHSRA General Plan Amendment and mitigation measures shall be considered, including but not limited to:

- The effects of noise resulting from the use or operation of new facilities should be analyzed to ensure consistency with relevant local noise ordinances. The design of new facilities shall incorporate specifications that prevent noise impacts on nearby residences.
- Operation of maintenance equipment such as mowers should abide by the local noise ordinances.
- Speed limits should be placed on roads accessing the park to reduce noise levels caused by motor vehicle traffic.
- Scheduling of recreational events and educational field trip visits should be consistent with relevant local noise ordinances.

Implementation of the requirements described above would reduce the potential program-level operational noise impacts associated with the implementation of the KHSRA General Plan Amendment.

Refined Project-Specific Mitigation Measures

None.

Level of Significance for Proposed Project

Based on the proposed Project description and implementation of the MMs listed above, Project impacts related to noise would be less than significant. The proposed Project would not result in a new or substantially more severe impacts related to noise quality than identified in the Final EIR and Addendum No. 1.

3.11 PUBLIC SERVICES

The Final EIR determined that implementation of the KHSRA General Plan Amendment would not induce population growth and would not generally require expansion or improvement of public services. Any system expansions required for individual actions are expected to be minimal, and construction and operation of expansions would not likely result in significant effects on the physical environment. As discussed in the Final EIR, overall, the KHSRA General Plan Amendment is beneficial to public services as it will result in efficiency improvements to these systems. However, potential fire protection services impacts could occur if new facilities are not designed properly and proper access and water flow is not provided. This potential impact was determined to be less than significant with implementation of the adopted MM Util-1.

Impact Analysis

The following impact analyses derived from Appendix G of the CEQA Guidelines are addressed to determine if the proposed Project would result in new or more severe impacts related to public services than identified in the Final EIR and Addendum No.1.

a) Would the project result in substantial adverse physical impacts associated with the provision of new or physically altered government facilities, need for new or physically altered government facilities, the construction of which could cause significant environmental impacts, in order to maintain acceptable service ratios, response times, or other performance objectives for any of the public services:

- Fire protection?
- Police protection?
- Schools?
- Parks?
- Other public facilities?

Fire Protection

As discussed in the Final EIR, fire protection services for the eastern portion of the KHSRA, which includes the Project site, is provided by the City of Los Angeles Fire Department and the Culver City Fire Department, the primary service provider for the Vista Pacifica Scenic Site. In addition, under the Statewide Master Mutual Aid Agreement, each fire department is available to assist the other upon request and, in the event that these departments cannot respond, assistance could be made available from the Los Angeles County Fire Department. As discussed, increased visitation to the KHSRA would, in turn, increase the probability of fires caused by human activity. The General Plan Amendment includes some management actions for providing additional fire protection, including installation of fire roads and hydrants where necessary and limiting park hours to daytime only, except for scheduled events in controlled areas.

The proposed Project does not include construction of any structures or other features that would inherently represent a fire hazard. The proposed trail has been designed to support vehicle traffic (personnel and emergency traffic only), and the gated entry on La Brea Avenue would retain adequate space for ingress/egress and turnaround of emergency vehicles, consistent with Final EIR MM Util-1. Also, water flows to support fire fighting on the Project site, consistent with Util-1, would be available via the existing fire hydrant located along Phase 1 of the Eastern Ridgeline trail. Therefore, consistent with the findings of the Final EIR, the proposed Project would result in a less than significant impact on fire protection services with implementation of Util-1.

Police Protection

As discussed in the Final EIR, police protection services in the KHSRA are provided by the California Department of Parks and Recreation, the Culver City Police Department, and the Los Angeles County Police Department. The Los Angeles County Police Department is the primary service provider for the eastern portion of the park. Although no formal mutual aid agreement exists between the Culver City and County departments, they cooperate as part of a regional approach in response to a large-scale event or natural catastrophe.

The proposed Project would be operated in compliance with all applicable management actions for providing additional public safety services that meet the demands of increased use and activity in the KHSRA. The Project site perimeter would continue to be gated. Hours of allowable trail use would be limited to daytime only, except for scheduled events in controlled areas. On-site vehicle access would be limited to personnel and emergency traffic only, and a gated entry and signage system would be provided that enables easy and rapid access to the park by public safety personnel. Therefore, consistent with the findings of the Final EIR, the proposed Project would result in a less than significant impact on police protection services.

Schools, Parks and Other Public Services

Also as discussed in the Final EIR, there are numerous schools and other public services, such as libraries, religious institutions, and businesses and city service organizations in the KHSRA General Plan Amendment planning area. As determined in the Final EIR, implementation of the KHSRA General Plan Amendment would not induce population growth, and, accordingly, the proposed Project would also not induce population growth, directly or indirectly. Therefore, the proposed Project would result in no impacts related to increased demand on schools or other public services. Parks and other recreational facilities are addressed in Section 3.12, Recreation, below.

Adopted Mitigation Measures Applicable to the Proposed Project

Util-1 Potential fire protection services impacts should be reviewed at the project-level for specific facilities or Management Plans proposed under the KHSRA General Plan Amendment and mitigation measures shall be considered, including but not limited to:

- Individual actions shall comply with all applicable State and local codes and ordinances. Requirements may relate to automatic fire extinguishing systems and smoke detectors.
- Roofs of new structures shall have a Class A rating to mitigate problems that may arise as a result of grassland-urban interface.
- Requirements for emergency vehicle access shall be incorporated into project design, including access to physical structures and fire hydrants. Such requirements include road grade and lane width, paving of access roads, curb painting, emergency breakaway gates, vertical clearance, turning radii, turn-around areas, and signage.
- Water flow requirements and fire hydrant specifications shall be met. All fire hydrants shall be in place prior to construction of any facilities.
- Emergency vehicle access shall be maintained at all times during construction phases.
- Access for Fire Department apparatus and personnel to and into all structures shall be required.

Implementation of the requirements described above would reduce the potential program-level fire protection services impacts associated with the implementation of the KHSRA General Plan Amendment.

Refined Project-Specific Mitigation Measures

None.

Level of Significance for Proposed Project

Based on the proposed Project description and implementation of the mitigation measures listed above, Project impacts related to public services would be less than significant. The proposed Project would not result in new or substantially more severe impacts related to public services than identified in the Final EIR and Addendum No. 1.

3.12 RECREATION

The Final EIR determined that the following potential recreation impacts would be less than significant with implementation of the adopted mitigation measures Rec-1 and Rec-2: (1) deterioration of KHSRA facilities or nearby recreation facilities; (2) facilities that are not sized to accommodate potential use levels; (3) facilities that are not operated and maintained or operated properly; and (4) facilities whose expected use levels are exceeded with development under the KHSRA General Plan Amendment.

Impact Analysis

The following impact analyses derived from Appendix G of the CEQA Guidelines are addressed to determine if the proposed Project would result in new or more severe impacts related to recreation than identified in the Final EIR and Addendum No.1.

a) Would the project increase the use of existing neighborhood and regional parks or other recreational facilities such that substantial physical deterioration of the facility would occur or be accelerated?

As discussed in the Final EIR, one of the most actively used features in KHSRA is the park's variety of footpaths and trails, such as the existing Eastern Ridgeline trail on the Project site. As discussed, adjacent streets, including La Brea Avenue and Stocker Street are regularly in use by pedestrians as exercise routes to and from the KHSRA's more than seven miles of trails, predominantly in the mornings and evenings. However, the limited walking trails provided in the area are not comprehensive enough to accommodate the majority of users and the KHSRA lacks a comprehensive trail system to connect existing park areas and regional trails.

Implementation of the proposed Project would result in a beneficial impact both for the quality of trail facilities within the KHSRA and for improved pedestrian connectivity to area parks, through the off-site improvements within the La Brea Avenue/Stocker Street intersection and would increase use of the Eastern Ridgeline trail. Implementation could also result in increased use of the adjacent Norman O. Houston and Ruben Ingold parks. However, as discussed previously, the proposed Project is not anticipated to result in substantially more visits to the Eastern Ridgeline trail or to the KHSRA as a whole. Also, the proposed Project would implement Final EIR MM Rec-1, which requires project design to have appropriate sizing and capacity for planned use and to include maintenance requirements. Therefore, the proposed Project would not result in the increased use of the Project site, or surrounding recreational facilities, such that substantial physical deterioration would occur or be accelerated, and there would a less than significant impact.

b) Does the project include recreational facilities or require the construction or expansion of recreational facilities which might have an adverse physical effect on the environment?

The proposed Project involves the construction of recreational facilities. The analysis presented in this Addendum demonstrates that potential adverse physical impacts associated with construction and operation of the proposed Project would be less than significant with implementation of the adopted mitigation measures and the refined Project-specific mitigation measures identified for biological resources and hazards and hazardous materials, consistent with Final EIR MM Rec-2.

Adopted Mitigation Measures Applicable to the Proposed Project

Rec-1 Potential deterioration of recreation facilities should be reviewed at the project-level for specific facilities or Management Plans proposed under the KHSRA General Plan Amendment and mitigation measures shall be considered, including but not limited to:

- Work with and reach an agreement with adjacent jurisdictions (Los Angeles County, City of Culver City, City of Los Angeles) to ensure that connecting trails and adjacent neighborhood parks are adequately sized and maintained to support any additional use that may result from implementation of the General Plan Amendment.
- Project level design of KHSRA facilities shall include appropriate sizing and capacity for planned use.
- Project level design of KHSRA facilities shall include associated maintenance requirements.

Implementation of the measures described above would reduce the potential program-level recreation facility deterioration impacts associated with the implementation of the KHSRA General Plan Amendment.

Rec-2 In order to address potential adverse physical effect on the environment associated with the construction and operation of proposed recreation facilities to less than significant, the mitigation measures included in this section entitled "Mitigation Measures Proposed to Minimize Significant Effects" would be implemented.

Refined Project-Specific Mitigation Measures

None.

Level of Significance for Proposed Project

Based on the proposed Project description and implementation of the mitigation measures listed above, Project impacts related to recreation would be less than significant. The proposed Project would not result in a new or substantially more severe impacts related to recreation than identified in the Final EIR and Addendum No. 1.

3.13 TRANSPORTATION/TRAFFIC

The analysis in Final EIR determined that the following potential traffic impacts would be less than significant with implementation of adopted MMs Trans-1 through Trans-3: related to (1) increased traffic that significantly impacts the local and regional circulation networks in the project vicinity; (2) pedestrian and bicycle safety hazards; and (3) creation of an unmet demand for parking with development under the KHSRA General Plan Amendment.

Impact Analysis

The following impact analyses derived from Appendix G of the CEQA Guidelines are addressed to determine if the proposed Project would result in new or more severe impacts related to transportation and traffic than identified in the Final EIR and Addendum No.1.

a) Would the project conflict with an applicable plan, ordinance or policy establishing measures of effectiveness for the performance of the circulation system, taking into account all modes of transportation including mass transit and non-motorized travel and relevant components of the circulation system. Including but not limited to intersections, streets, highways and freeways, pedestrian and bicycle paths, and mass transit?

As discussed in Section 2.7, Project Description, implementation of the proposed Project would be expected to increase public visitation to the KHSRA, as anticipated in the Final EIR. While the existing visitation to the KHSRA is not calculated and therefore the specific change in visitation cannot be feasibly quantified, because the proposed Project would continue to provide a passive recreation feature similar to the existing condition and based on the available public parking in the immediate area, the proposed Project is not anticipated to result in substantially more visits to the Eastern Ridgeline trail or the KHSRA as a whole. However, for purposes of analysis in this Addendum, a conservative, worst-case scenario of anticipated daily visitation on a weekend or holiday of 94 vehicle visits, and 188 one-way trips, was estimated based on the available parking, as discussed further in Section 3.2, Air Quality. This estimate includes the existing visitation to the site, and would occur over the course of a day.

The additional visitation to the Eastern Ridgeline trail as a result of the proposed Project would be a small proportion of the total vehicle trips expected from implementation of the KHSRA General Plan Amendment as a whole. The low level of additional trips in any given hour, even based on the worst-case scenario described above, would not result in congestion on roadways in the Project site vicinity. Therefore, the proposed Project would not conflict with any plan, ordinance or policy establishing measures of effectiveness for the performance of the circulation system or conflict with an applicable congestion management program. There would be a less than significant impact related to traffic circulation and no mitigation would be required.

b) Would the project conflict with an applicable congestion management program, including, but not limited to level of service standards and travel demand established by the county congestion management agency for designated roads or highways?

At the time of preparation of the Final EIR, the *Draft 2002 Congestion Management Program for Los Angeles County* (CMP) reported that all CMP facilities in the KHSRA vicinity (i.e., La Cienega Boulevard, I-10, and I-405) operated at Level of Service (F), or poor, in both the AM and PM peak hours (DPR 2002). The current CMP, the *Draft 2010 Congestion Management Program for Los Angeles County* reports these facilities continue to operate at LOS F during peak hours (Metro 2010). It is noted that many of the trips to the KHSRA are on the weekend, and are therefore not during the peak hours, which occur Monday through Friday.

Los Angeles County has developed traffic impact guidelines with criteria to assess impacts of local land use decisions on regional transportation facilities included in the CMP roadway system. Although the proposed Project would increase visitation and associated vehicle trips to the KHSRA, it would not be expected to generate additional trips that meet or exceed the CMP criteria of adding 50 or more trips during either the AM or PM peak hours on CMP arterial monitoring intersections arterial segments, and 150 or more trips to mainline freeway locations during the peak hours. Based on the CMP significance criteria and the proposed Project's anticipated trip generation, there would be a less than significant impact at CMP facilities, assessed for the proposed Project consistent with Final EIR MM Trans-1. Therefore, the proposed Project would not conflict with the applicable congestion management program, and there would be a less than significant impact.

c) Would the project result in a change in air traffic patterns, including either an increase in traffic levels or change in location that results in substantial safety risks?

The proposed Project would not generate air traffic or require air transportation, and would have no impact on air traffic patterns.

d) Would the project substantially increase hazards due to a design feature (e.g., sharp curves or dangerous intersections) or incompatible uses (e.g., farm equipment)?

The proposed intersection improvements are minor and would not alter lane trajectories, signage, or otherwise introduce a design feature that would create a traffic hazard. There would be no impact related to design hazards.

e) Would the project result in inadequate emergency access?

As discussed in Section 3.11, Public Services, the proposed trail has been designed to support vehicle traffic (personnel and emergency traffic only) and the gated entry on La Brea Avenue would retain adequate space for ingress/egress and turnaround of emergency vehicles, consistent with Final EIR MM Util-1. Also consistent with Util-1, emergency vehicle access shall be maintained at all times during construction phases, both within the KHSRA and during implementation of the proposed intersection improvements. There would be a less than significant impact related to emergency access.

f) Would the project conflict with adopted policies, plans, or programs regarding public transit, bicycle, or pedestrian facilities, or otherwise decrease the performance or safety of such facilities?

Implementation of the proposed Project would improve pedestrian and bicycle safety within the La Brea Avenue/Stocker Street intersection, which is a known issue of concern for the KHSRA, and would encourage increased alternative transit (i.e., pedestrian/bicycle) to and from the KHSRA, consistent with the intent of Final EIR MM Trans-2. Therefore, the proposed Project would not conflict with alternative transportation policies, plans, or programs or otherwise decrease the performance or safety of such facilities. There would be no impact related to alternative transportation facilities.

Adopted Mitigation Measures Applicable to the Proposed Project

Trans-1 Potential traffic circulation impacts should be reviewed at the project-level for specific facilities or Management Plans proposed under the KHSRA General Plan Amendment and mitigation measures shall be considered, including but not limited to:

- Upon development of project level facilities and Management Plans, conduct a traffic impact analysis for the park's components consistent with the requirements of the Los Angeles County Congestion Management Program (CMP). Components of the CMP-level traffic impact analysis would include, but not be limited to the following: 1) project trip generation analysis; 2) roadway, intersection and freeway mainline operations and level of service analyses; 3) provision of mitigation measures to reduce potential project traffic impacts; and 4) an on-site circulation and access analysis. The traffic impact analysis shall be circulated to and reviewed by all potential impacted agencies including: the cities of Culver City and Los Angeles; the Los Angeles County MTA; and Caltrans. Following completion and approval of the traffic impact analysis, implement any required mitigation or requirements.

Implementation of CMP requirements, as described above, would reduce the potential program level traffic circulation impacts associated with the implementation of the KHSRA General Plan Amendment.

Trans-2 Potential pedestrian and bicycle safety impacts should be reviewed at the project-level for specific facilities or Management Plans proposed under the KHSRA General Plan Amendment and mitigation measures shall be considered, including but not limited to:

- Upon development of project level facilities and Management Plans, an access and on-site circulation analysis shall be conducted to determine the adequacy of pedestrian and vehicular access locations and facilities. This analysis shall be prepared in accordance to design guidelines established by the affected city jurisdictions, the County of Los Angeles and Caltrans. Components of the access and on-site circulation analysis would include, but not be limited to the following: 1) vehicular queuing at main access locations; 2) roadway design (horizontal and vertical sight distance, roadway width and grade, etc.); and 3) consistency of pedestrian facilities with local and State design guidelines (e.g., Caltrans Highway Design Manual, and local Zoning Ordinances). The access and on-site circulation analysis shall be circulated to and reviewed by all potential impacted agencies including: the cities of Culver City and Los Angeles; the Los Angeles County MTA; and Caltrans. Following completion and approval of the on-site circulation analysis, implement any required mitigation or requirements.

Implementation of the requirement described above would reduce the potential program-level pedestrian and bicycle safety impacts associated with the implementation of the KHSRA General Plan Amendment.

Repeated from Section 3.14, Public Services:

Util-1 *Potential fire protection services impacts should be reviewed at the project-level for specific facilities or Management Plans proposed under the KHSRA General Plan Amendment and mitigation measures shall be considered, including but not limited to:*

- *Individual actions shall comply with all applicable State and local codes and ordinances. Requirements may relate to automatic fire extinguishing systems and smoke detectors.*
- *Roofs of new structures shall have a Class A rating to mitigate problems that may arise as a result of grassland-urban interface.*
- *Requirements for emergency vehicle access shall be incorporated into project design, including access to physical structures and fire hydrants. Such requirements include road grade and lane width, paving of access roads, curb painting, emergency breakaway gates, vertical clearance, turning radii, turn-around areas, and signage.*
- *Water flow requirements and fire hydrant specifications shall be met. All fire hydrants shall be in place prior to construction of any facilities.*
- *Emergency vehicle access shall be maintained at all times during construction phases.*
- *Access for Fire Department apparatus and personnel to and into all structures shall be required.*

Implementation of the requirements described above would reduce the potential program-level fire protection services impacts associated with the implementation of the KHSRA General Plan Amendment.

Refined Project-Specific Mitigation Measures

None.

Level of Significance for Proposed Project

Based on the proposed Project description and implementation of the mitigation measures listed above, Project impacts related to transportation and traffic would be less than significant. The proposed Project would not result in a new or substantially more severe impacts related to transportation and traffic than identified in the Final EIR and Addendum No. 1.

3.14 UTILITIES AND SERVICE SYSTEMS

The Final EIR determined that implementation of the KHSRA General Plan Amendment would generally not require expansion or improvement of utilities. Any system expansions required for individual actions are expected to be minimal, and construction and operation of expansions would be anticipated to result in less than significant effects on the physical environment. As discussed in the Final EIR, overall, the KHSRA General Plan Amendment is beneficial to utility systems as it will result in efficiency improvements to these systems.

Impact Analysis

The following impact analyses derived from Appendix G of the CEQA Guidelines are addressed to determine if the proposed Project would result in new or more severe impacts related to utilities and service systems than identified in the Final EIR and Addendum No.1.

a) Would the project exceed wastewater treatment requirements of the applicable Regional Water Quality Control Board?

The proposed Project does not include construction of restrooms and would not generate wastewater. Therefore, the Project would not exceed the Los Angeles Regional Water Quality Board wastewater treatment requirements. There would be no impact related to wastewater treatment requirements.

b) Would the project require or result in the construction of new water or wastewater treatment facilities or expansion of existing facilities, the construction of which could cause significant environmental effects?

The proposed Project does not include construction of restrooms and would not generate wastewater. As discussed under Threshold 3.14(d) below, the proposed Project would be served with adequate water supplies based on existing sources. Therefore, the proposed Project would not require the construction or expansion of water or wastewater treatment facilities. There would be no impact related to water and wastewater treatment facilities.

c) Would the project require or result in the construction of new storm water drainage facilities or expansion of existing facilities, the construction of which could cause significant environmental effects?

As discussed in Section 3.8, Hydrology and Water Quality, the proposed Project does not involve creation of impervious surfaces that would substantively alter the existing drainage pattern on the Project site, and runoff would continue to infiltrate into the soil or flow overland into the storm

drainage system in La Brea Avenue. There would be no demonstrable change in the rate or volume of runoff from the Project site. Also, the proposed grading plan incorporates drainage requirements and has been designed to ensure the stability of the trail and the adjacent slopes in accordance with applicable code requirements, and must be reviewed and approved by County prior to issuance of a grading permit, consistent with Final EIR MM Hydro-1. There would be a less than significant impact related to storm water drainage facilities.

d) Would the project have sufficient water supplies available to serve the project from existing entitlements and resources, or are new or expanded entitlements needed?

As discussed in the Final EIR, the LADWP supplies water to the KHSRA, and a small amount of well water is also used at the park. As discussed in Section 2.7, Project Description, the planted areas of the Project site would be temporarily irrigated via connection to the irrigation system installed as part of the Phase 1 project. A control valve installed at the top of the slope at the northern terminus of the Phase 2 Project would be opened to irrigate the new plantings and hydroseeding until the plants are sufficiently established to no longer require irrigation, approximately one to year years. The control valve would then be permanently closed and the Project site would not be irrigated. Therefore, the proposed Project would require short-term, temporary water supplies. The Final EIR concluded that, after implementation of the General Plan Amendment, the KHSRA would continue to have sufficient water supplies available from existing resources. Therefore, consistent with the finding of the Final EIR, there would be adequate water supplies for the proposed Project's short-term demand for irrigation water for the proposed Project. There would be a less than significant impact related to water supply entitlements.

e) Would the project result in a determination by the wastewater treatment provider which serves or may serve the project that it has inadequate capacity to serve the project's projected demand in addition to the provider's existing commitments?

The proposed Project does not include construction of restrooms and would not generate wastewater. Therefore, there would be no impacts related to wastewater conveyance or treatment.

f) Would the project be served by a landfill with sufficient permitted capacity to accommodate the project's solid waste disposal needs?

As discussed in the Final EIR, increased use of the KHSRA with implementation of the General Plan Amendment would generate additional solid waste, but the increase would be relatively small compared to total landfill capacity serving the region. Increased use of the Eastern Ridgeline trail would generate increased solid waste at this KHSRA facility. However, as determined for the KHSRA as a whole, the incremental increase in solid waste requiring landfill disposal, after recycling and other diversion efforts, would be minimal and would be accommodated by the landfills serving the region. There would be a less than significant impact to landfills.

g) Would the project comply with federal, state, and local statutes and regulations related to solid waste?

The KHSRA General Plan complies with federal, State, and local statutes and regulations related to solid waste, and includes recycling of green waste and recycling of other recyclable products, which would apply to the proposed Project. There would be no impact related to solid waste regulations.

Adopted Mitigation Measures Applicable to the Proposed Project

Repeated from Section 3.8, Hydrology and Water Quality:

Hydro-1 *Potential runoff and downstream flooding impacts should be reviewed at the project-level for specific facilities or Management Plans proposed under the KHSRA General Plan Amendment and mitigation measures shall be considered, including but not limited to:*

- *Park improvements shall include upgrading of storm water drainage facilities to accommodate increased runoff volumes where necessary. These upgrades may include the construction of detention basins or structures that will delay peak flows and reduce velocity. System designs shall be designed to eliminate increases in peak flow rates from current levels.*
- *A drainage plan shall be included with grading plan applications. Drainage systems shall be designed to maximize the use of detention basins, vegetated areas, and velocity dissipaters to reduce peak flows where possible.*

Implementation of storm drainage measures, as described above, would reduce the program level potential runoff and downstream flooding impacts associated with the implementation of the KHSRA General Plan Amendment.

Refined Project-Specific Mitigation Measures

None.

Level of Significance for Proposed Project

Based on the proposed Project description and implementation of the mitigation measures listed above, Project impacts related to utilities and service systems would be less than significant. The proposed Project would not result in a new or substantially more severe impacts related to utilities and service systems than identified in the Final EIR and Addendum No. 1.

3.15 ENVIRONMENTAL ANALYSIS CONCLUSION

Mandatory Findings of Significance

The Environmental Checklist Form presented in Appendix G of the CEQA Guidelines includes the section “Mandatory Findings of Significance”, in addition to topic-specific analyses, and addresses the following impact analyses.

a) Does the project have the potential to degrade the quality of the environment, substantially reduce the habitat of a fish or wildlife species, cause a fish or wildlife population to drop below self-sustaining levels, threaten to eliminate a plant or animal community, reduce the number or restrict the range of rare or endangered plant or animal, or eliminate important examples of the major periods of California history or prehistory?

Biological Resources

Biological resources are addressed in Section 3.3 of this Addendum. As discussed, the only native vegetation in the survey area is disturbed California sagebrush scrub. Although the removal of 0.10 acre (0.01 acre permanent, 0.09 acre temporary) of disturbed California sagebrush scrub would be adverse, the loss of habitat would be considered less than significant due to the very limited amount being removed in comparison to the amount of similar habitat available in the KHSRA.

As discussed in Section 3.3, implementation of MMs ER Trail-1 and ER Trail-2 (which are refinements of Final EIR MM Bio-1) and implementation of Final EIR mitigation measure Bio-2 would reduce impacts related to the “limited potential” for the coastal California gnatcatcher to

occur on the Project site and nesting birds/raptors protected under the MBTA, respectively, to a less than significant level.

The Project site does not contain riparian habitat, wetlands, or any other sensitive natural vegetation community. The proposed Project would be consistent with the proposed use of the Project site described for Significant Ecological Area (SEA) #38 Baldwin Hills. The County's Oak Tree Ordinance is not applicable because there are no oak trees present on the Project site. There are no Habitat Conservation Plans, Natural Community Conservation Plans, or other conservation plan areas on or adjacent to the Project site. Regarding wildlife movement, due to the limited duration of construction activity, because wildlife are acclimated to human activity and because the proposed Project would not appreciably alter the extent of habitat available for wildlife movement, the proposed Project's impact on wildlife movement would be less than significant.

No significant unavoidable or cumulative impacts to biological resources would occur from implementation of the proposed Project. As such, the Project would not substantially reduce the habitat of a fish or wildlife species; cause a fish or wildlife population to drop below self-sustaining levels; threaten to eliminate a plant or animal community; or reduce the number or restrict the range of a rare or endangered plant or animal.

Cultural Resources

Cultural resources are addressed in Section 3.4 of this Addendum. As discussed, there are no structures or other built features on the Project site that could potentially be historic. With implementation of Final EIR MMs Cul-1 through Cul-3, there would be less than significant impacts related to discovery of unknown archaeological or paleontological resources and human remains. No significant unavoidable or cumulative impacts to cultural resources would occur from implementation of the proposed Project. As such, the Project would not eliminate important examples of the major periods of California history or prehistory.

Degradation of the Environment

As discussed in the introduction to Section 3.0, this Addendum No. 2 has been prepared to determine whether the proposed Project would result in new significant environmental impacts or a substantial increase in the severity of impacts identified in the KHSRA General Plan Amendment and Final EIR. The environmental analysis presented herein is guided by the scope and findings of the Final EIR and the nature of the proposed Project, and, consistent with the Final EIR and the CEQA Guidelines Appendix G, addresses the following topics (in the order presented in this Addendum No. 2): aesthetics, air quality, biological resources, cultural resources, geology and soils, GHG emissions, hazards and hazardous materials, hydrology and water quality, land use, noise, public services, recreation, traffic and transportation, and utilities and service systems.

As identified in the analyses presented in Sections 3.1 through 3.14 above, the proposed Project would not result in any significant and unavoidable environmental impacts, with implementation of the identified mitigation measures, consistent with the findings of the KHSRA General Plan Amendment and Final EIR and Addendum No. 1. Further, as discussed previously, the proposed Project would not result in new or more severe impacts than anticipated in the Final EIR. Therefore, for these reasons, the proposed Project does not have the potential to degrade the quality of the environment.

b) Does the project have impacts that are individually limited, but cumulatively considerable? ("Cumulatively considerable" means that the incremental effects of a project are considerable when viewed in connection with the effects of past projects, the effects of other current projects, and the effects of probable future projects)?

As identified in the analyses presented in Sections 3.1 through 3.14 above, the proposed Project would not result in any significant and unavoidable environmental impacts, with implementation of the identified mitigation measures, consistent with the findings of the KHSRA General Plan Amendment and Final EIR and Addendum No. 1. Further, as discussed previously, the proposed Project would not result in new or more severe impacts than anticipated in the Final EIR.

Section 15355 of the CEQA Guidelines defines cumulative impacts as "two or more individual effects which when considered together are considerable or which compound or increase other environmental impacts". Section 15130 of the CEQA Guidelines states that cumulative impacts shall be discussed where they are significant, and that this discussion shall reflect the level and severity of the impact and the likelihood of occurrence, but not in as great a level of detail as that which is necessary for the project alone. Cumulative impacts represent the change caused by the incremental impact of a project when added to other proposed or committed projects in the vicinity.

The project site is isolated from surrounding land uses, in particular residential and other sensitive land uses, by La Brea Avenue and Stocker Street to the east and south, respectively, the presence of the Inglewood Oil Field to the west, and the KHSRA lands to the north. Also, the intensity of construction and operational activities, including traffic generation, for the proposed Project is minimal and would not affect surrounding land uses that are located past the adjacent uses. Therefore, the study area considered for any potential cumulative impacts is the immediate vicinity of the project site, extending from the Project boundaries to the opposite sides of La Brea Avenue and Stocker Street, encompassing the Inglewood Oil Field, and encompassing the remainder of the Eastern Ridgeline within the KHSRA. This represents a cumulative study area border of approximately 0.3-mile to the north, approximately 350 feet to the west, and approximately 100 feet to the east and south. The exceptions to this approach include the analyses of air quality and GHG emissions, which address potential impacts within the SoCAB (regionally) and globally, respectively, as part of the standard methodologies for these topics. s. Also, the analyses of air quality and GHG emissions provided above in Sections 3.2 and 3.6, respectively, determined there would be less than significant impacts on the regional and global levels.

There is one known approved, future project that would have the potential to be constructed within the same time frame as the proposed Project and is located in the study areas considered for cumulative impacts – the Phase 1 portion of the Eastern Ridgeline Trail Project addressed in Addendum No. 1. As described in Section 1.0, Introduction, Phase 1 of the Eastern Ridgeline Trail project proposes to create a family-friendly recreation area that would provide an improved walking trail and new fitness zones, concrete animal structures, benches, and trash receptacles within an approximate 2,540-foot, north-south trending, linear area along the eastern boundary of the southernmost portion of the KHSRA (Sapphos Environmental Inc. 2010). The Phase 1 project encompassed the majority, but not the entirety, of the existing Eastern Ridgeline Trail. Also, as discussed in Section 1.0, the Phase 1 project proposes substantially more intensive site development, both in geographic extent and types of project components, than proposed in the Phase 2 Project. It is anticipated that Phase 1 and Phase 2 of the Eastern Ridgeline Trail will be constructed concurrently, and the County of Los Angeles is the Lead Agency under CEQA for both projects. Therefore, the County will be responsible for implementing applicable regulatory requirements and mitigation measures during construction and operation of both projects. This ensures that all required measures to reduce to avoid environmental impacts identified for the Phase 1 and Phase 2 projects will be implemented, and there would be no cumulatively significant impacts. Also, the Addendum No. 1 concluded that with implementation of the identified mitigation measures from the KHSRA General Plan Amendment and Final EIR, there would be less than significant impacts from implementation of

the Phase 1 project. Therefore, the proposed Project would not result in a cumulatively considerable impact for any environmental issue addressed in this Addendum No. 2. This is consistent with the findings of the Final EIR for cumulative impacts.

c) Does the project have environmental effects which will cause substantial adverse effects on human beings, either directly or indirectly?

As discussed in Section 3.7, Hazards and Hazardous Materials, the Project site soils have the potential to have been impacted be historical oil production on and near the Project site. Based on review of the 2005 Preliminary Endangerment Assessment (PEA) conducted by DTSC and preparation of the 2012 Supplemental Site Investigation (SSI) conducted by URS in coordination with DTSC, the SSI concludes there are no unacceptable risks or hazards associated with direct contact to compounds of potential concerns detected in soil at the Eastern Ridgeline, and the these soils do not pose an unacceptable risk to human health based on the future land use (i.e., the proposed trail). This would apply for both construction workers and future trail users. However, as a precaution, the SSI recommends soil management practices to be implemented during grading and construction activities to ensure that potential soil contamination does not pose a significant hazard to the construction crew (MM ER Trail-3). Therefore, with implementation of ER Trail-3 (which refines Final EIR MM Haz-1), there would be less than significant impacts related to the potential to encounter known hazardous wastes on the Project site. As identified in the analyses presented in Sections 3.1 through 3.14 above, the proposed Project would not result in any significant and unavoidable environmental impacts, with implementation of the identified mitigation measures, consistent with the findings of the KHSRA General Plan Amendment and Final EIR and Addendum No. 1. Further, as discussed previously, the proposed Project would not result in new or more severe impacts than anticipated in the Final EIR. Therefore, for these reasons, the proposed Project would not result in substantial adverse effects to human beings.

Summary of Addendum No. 2 Analysis

As discussed in Section 1.0, Introduction, the purpose of this Addendum No. 2 is to evaluate the potential for changes to the impacts evaluated in the KHSRA General Plan Amendment and Final EIR, and Addendum No. 1, with those that would be associated with implementation of the proposed Project. Based on the analyses presented in Sections 3.1 through 3.14 above, there would be no new significant environmental impacts, nor any substantial increase in the severity of previously identified impacts, resulting from construction and operation of the proposed Project. Both the Final EIR and Addendum No. 1 determined there would be no significant and unavoidable impacts through implementation of their respective scopes of development with implementation of identified mitigation measures. The impacts anticipated with implementation of the proposed Phase 2 Project are within the scope of impacts assessed in the Final EIR and Addendum No. 1 with implementation of adopted mitigation measures and the refined Project-specific mitigation measures identified for biological resources and hazardous materials.

It is noted that the Project-specific mitigation measures are not required to address any new significant environmental impacts not anticipated and addressed in the Final EIR. Rather, the Project-specific mitigation measures identified herein are refinements of the program-level mitigation measures adopted in the Final EIR that provide a higher level of detail and/or specificity to reflect the current Project and the site conditions. The refined measures are within the scope of the previously adopted measures. Therefore, in accordance with Section 15164 of the CEQA Guidelines, this Addendum No. 2 to the previously certified Final EIR is the appropriate environmental documentation to support implementation of the proposed Phase 2 Project.

SECTION 4.0 REFERENCES

Alta Planning + Design (Alta). 2011 (July 25). *Memorandum to Ana Petrlic (Mountains Recreation and Conservation Authority) from Randy Anderson (Alta Planning + Design), RE: Park to Playa Eastern Ridge Line Trail assessment and alignment*. Los Angeles, CA: Alta.

Atwood, J. 1980. California black-tailed gnatcatcher population survey. UCLA Department of Biology.

Brown-Buntin Associates, Inc. (Brown-Buntin). 2010 (May 24). Environmental Noise Analysis, Jesuit High School Chapel, Sacramento County, California. http://www.dera.saccounty.net/portals/0/docs/EnvDocs_Notices/20080023712010112415420 6.pdf.

California Air Resources Board (CARB). 2010 (August 22, last reviewed). Area Designation Maps/State and National. Sacramento, CA: CARB. www.arb.ca.gov/desig/adm/adm.htm/.

California Department of Fish and Game (CDFG). 2011 (September). California Natural Diversity (RareFind) Database. Records of Occurrence for the USGS Hollywood and Inglewood 7.5-minute quadrangles. Sacramento, CA: CDFG, Natural Heritage Division.

———. 2010 (September). List of Vegetation Alliances and Associations. Vegetation Classification and Mapping Program, California Department of Fish and Game. Sacramento, CA.: CDFG.

California Department of Parks and Recreation (DPR). 2002 (June). *Recirculated Draft KHSRA General Plan Amendment and EIR*. Sacramento, CA: DPR.

California Energy Commission (CEC). 2001 (June). Baldwin Hills Energy Facility No. 1 (01-EP-11) Staff Assessment for Emergency Permit. Sacramento, CA: CEC. http://www.energy.ca.gov/sitingcases/peakers/baldwin/documents/BALDWIN_FINAL_ASSESSMENT.PDF

California Native Plant Society (CNPS). September 2011. Electronic Inventory of Rare and Endangered Vascular Plants of California. Records of Occurrence for the USGS Hollywood and Inglewood 7.5-minute quadrangles. Sacramento, CA: CNPS. http://www.cnps.org/inventory.

California State Park and Recreation Commission (DPR Commission). 2002 (October 12). *Minutes if Saturday, October 12, 2002 Meeting of the California State Park and Recreation Commission*. Los Angeles, CA: DPR Commission.

Civil Works Engineers. 2012 (January 9). Letter to J. Madrigal, SE (Senior Civil Engineer, Los Angeles County Department of Public Works Building and Safety) from M. Marston, PE (President, Civil Works Engineers). Subject: Modification Request for Eastern Ridgeline Trail, Kenneth Hahn Regional Park.

Coffin, J. 2010. Record of coastal California gnatcatcher in Ballona wetlands. LACoBirds, http://groups.yahoo.com/group/LACoBirds/message/9585 (a date correction was posted in message 9589).

Desai, S. 2012 (February 10). Personal communication. E-mail from S. Desai, AIA, LEED® AP (Project Manager, Project Management Division II, Los Angeles County Department of Public Works) to J. Neary (Assistant Project Manager, BonTerra Consulting) regarding Building and Safety approval of trail modification request by Civil Works Engineers.

England and Nelson Environmental Consultants. 1976. *Los Angeles County Significant Ecological Area Study* (Prepared for the Los Angeles County Department of Regional Planning and Environmental Systems Research Institute). Riverside, CA: England and Nelson Environmental Consultants.

Los Angeles, County of, Chief Executive Office (County CEO). 2010 (September 21). *Letter from County of Los Angeles Chief Executive Office to the Honorable Board of Supervisors, County of Los Angeles; Subject: Department of Public Works: Certify Addendum to Environmental Impact Report, Adopt Resolution and Approve Project, Kenneth Hahn Eastern Ridgeline Project, Capital Project No. 69253 (Second District)(3 Votes).* Los Angeles, CA: County CEO.

Los Angeles County Department of Regional Planning (LACDRP). 2011 (April 5). *Los Angeles County General Plan 2035: Public Review Draft*. Los Angeles, CA: LACDRP.

———. 2010. Draft Significant Ecological Area Map, February 2010. http://planning.lacounty.gov/assets/upl/data/map_t02-sea-2-2010.pdf

———. 1980 (November 25). *Los Angeles County General Plan, Land Use Element*. Los Angeles, CA: LACDRP.

Los Angeles County Metropolitan Transportation Authority (Metro). 2010 (Adopted October 28). *Draft 2010 Congestion Management Program*. Los Angeles, CA: Metro.

Natural History Museum of Los Angeles County Foundation (LACMF). 2001 (February). *The Biota of the Baldwin Hills: An Ecological Assessment* (K.C. Molina, ED). Sacramento, CA: California Department of Parks and Recreation. http://www.bhc.ca.gov/documents_1.html

Sapphos Environmental, Inc. 2010 (June 7). *Revised Addendum to the Environmental impact Report for the Kenneth Hahn Eastern Ridgeline Project (SCH No. 2001071101).* Prepared for the County of Los Angeles Chief Executive Office. Pasadena, CA: Sapphos Environmental, Inc.

South Coast Air Quality Management District (SCAQMD). 2011a (March). *SCAQMD Air Quality Significance Thresholds*. Diamond Bar, CA: SCAQMD. http://www.aqmd.gov/ceqa/handbook/signthres.pdf.

———. 2011b. California Emission Estimator Model (CalEEMod)™ Version 2011.1.1 Developed by Environ International Corporation in Collaboration with SCAQMD and other California Air Districts. Diamond Bar, CA: SCAQMD

———. 2009 (October 21). Mass Rate Localized Significance Thresholds Look-up Tables. Diamond Bar, CA: SCAQMD. http://www.aqmd.gov/ ceqa/handbook/LST/appC.pdf.

———. 2008 (October). Draft Guidance Document – Interim CEQA Greenhouse Gas (GHG) Significance Thresholds. Diamond Bar, CA: SCAQMD.

URS Corporation, Inc. (URS). 2012 (February 9). *Technical Memorandum: Results of Supplemental Soil Investigation, Kenneth Hahn Eastern Ridgeline Site, 4100 La Cienega Boulevard, Los Angeles California*. Prepared by URS and prepared for Department of Toxic Substances Control.

U.S. Department of Agriculture, Natural Resources Conservation Service (USDA NRCS). 2007 (January 4). Soil Survey Geographic (SSURGO) Database for Los Angeles County, California, West San Fernando Valley Area. Fort Worth, TX: USDA, NRCS.

U.S. Department of Agriculture (USDA). 1969 (revised). *Report and General Soil Map, Los Angeles County, California*. Lancaster, CA: USDA, Natural Resources Conservation Service.

U.S. Department of Agriculture (USDA). 2010. Official Soil Series Descriptions (OSD) with Soil Extent Mapping Capabilities. http://soils.usda.gov/technical/classification/osd/

U.S. Fish and Wildlife Service (USFWS). 2007 (December 19). Endangered and Threatened Wildlife and Plants; Revised Designation of Critical Habitat for the Coastal California Gnatcatcher (*Polioptila californica californica*); Final Rule. *Federal Register* 72(243): 72009–72213.Washington, D.C.: USFWS.

SECTION 5.0 DOCUMENT PREPARERS AND CONTRIBUTORS

Los Angeles County Department of Public Works

Project Manager ..... Shirish Desai

Los Angeles County Counsel Office

Deputy County Counsel ..... Lauren Dods

BonTerra Consulting (Environmental Document Preparation)

Principal Manager ..... Joan P. Kelly, AICP

Senior Project Manager ..... Kristin L. Keeling

Assistant Project Manager ..... Jillian K. Neary

Air Quality and Greenhouse Gas Specialist ..... James Kurtz

Senior Biologist ..... Amber S. Oneal

Technical Editing ..... Julia Smith

GIS/Graphics ..... Christopher J. Starbird

Word Processing ..... Eva Rovillos

APPENDIX A

AIR QUALITY AND GREENHOUSE GAS MODEL DATA

Kenneth Hahn Eastern Ridgeline Phase 2 021512

Los Angeles-South Coast County, Winter

1.0 Project Characteristics

1.1 Land Usage

Land Uses	Size	Metric
City Park	1	Acre

1.2 Other Project Characteristics

Urbanization	Urban	**Wind Speed (m/s)**		**Utility Company**	Los Angeles Department of Water & Power
Climate Zone	11		2.2		
		Precipitation Freq (Days)			
			33		

1.3 User Entered Comments

Project Characteristics -

Land Use -

Construction Phase - Trail-grading 6/4-11/30/2012; Intersection-bldg 8/6-10/2012

Off-road Equipment - concrete saw for 5 days covers demo and conc mixer

Off-road Equipment - 2 dozer, 2 loader, exc, 2 OH truck- OFFROAD 2011 load factors

Trips and VMT - 2 workers-4 trips for intersection

Grading - no export of soil

Vehicle Trips - trip rates for 94 RT/188 1-way per day; 1 way

Landscape Equipment - no new landscape maint

Water And Wastewater - no long-term water use

Construction Off-road Equipment Mitigation -

Mobile Commute Mitigation -

2.0 Emissions Summary

2.1 Overall Construction (Maximum Daily Emission)

Unmitigated Construction

	ROG	NOx	CO	SO2	Fugitive PM10	Exhaust PM10	PM10 Total	Fugitive PM2.5	Exhaust PM2.5	PM2.5 Total	Bio- CO2	NBio- CO2	Total CO2	CH4	N2O	CO2e
Year	lb/day										lb/day					
2012	6.38	50.63	27.41	0.05	9.38	2.44	11.82	4.98	2.44	7.42			0.00	0.57	0.00	5,835.15
Total	**NA**	**NA**	**NA**	**NA**	**NA**	**NA**	**NA**	**NA**	**NA**	**NA**	**NA**	**NA**	**NA**	**NA**	**NA**	**NA**

Mitigated Construction

	ROG	NOx	CO	SO2	Fugitive PM10	Exhaust PM10	PM10 Total	Fugitive PM2.5	Exhaust PM2.5	PM2.5 Total	Bio- CO2	NBio- CO2	Total CO2	CH4	N2O	CO2e
Year	lb/day										lb/day					
2012	6.38	50.63	27.41	0.05	4.41	2.44	6.85	2.25	2.44	4.69			0.00	0.57	0.00	5,835.15
Total	**NA**	**NA**	**NA**	**NA**	**NA**	**NA**	**NA**	**NA**	**NA**	**NA**	**NA**	**NA**	**NA**	**NA**	**NA**	**NA**

2.2 Overall Operational

Unmitigated Operational

	ROG	NOx	CO	SO2	Fugitive PM10	Exhaust PM10	PM10 Total	Fugitive PM2.5	Exhaust PM2.5	PM2.5 Total	Bio- CO2	NBio- CO2	Total CO2	CH4	N2O	CO2e
Category	lb/day										lb/day					
Area	0.00	0.00	0.00	0.00		0.00	0.00		0.00	0.00				0.00		0.00
Energy	0.00	0.00	0.00	0.00		0.00	0.00		0.00	0.00				0.00	0.00	0.00
Mobile	1.03	2.39	9.43	0.01	1.22	0.08	1.31	0.04	0.08	0.12				0.07		1,175.63
Total	**1.03**	**2.39**	**9.43**	**0.01**	**1.22**	**0.08**	**1.31**	**0.04**	**0.08**	**0.12**				**0.07**	**0.00**	**1,175.63**

Mitigated Operational

	ROG	NOx	CO	SO2	Fugitive PM10	Exhaust PM10	PM10 Total	Fugitive PM2.5	Exhaust PM2.5	PM2.5 Total	Bio- CO2	NBio- CO2	Total CO2	CH4	N2O	CO2e
Category	lb/day										lb/day					
Area	0.00	0.00	0.00	0.00		0.00	0.00		0.00	0.00				0.00		0.00
Energy	0.00	0.00	0.00	0.00		0.00	0.00		0.00	0.00				0.00	0.00	0.00
Mobile	1.03	2.39	9.43	0.01	1.22	0.08	1.31	0.04	0.08	0.12				0.07		1,175.63
Total	**1.03**	**2.39**	**9.43**	**0.01**	**1.22**	**0.08**	**1.31**	**0.04**	**0.08**	**0.12**				**0.07**	**0.00**	**1,175.63**

3.0 Construction Detail

3.1 Mitigation Measures Construction

Water Exposed Area

3.2 Trail construction - 2012

Unmitigated Construction On-Site

	ROG	NOx	CO	SO2	Fugitive PM10	Exhaust PM10	PM10 Total	Fugitive PM2.5	Exhaust PM2.5	PM2.5 Total	Bio- CO2	NBio- CO2	Total CO2	CH4	N2O	CO2e
Category	lb/day										lb/day					
Fugitive Dust					9.04	0.00	9.04	4.97	0.00	4.97						0.00
Off-Road	5.75	47.40	23.68	0.05		2.18	2.18		2.18	2.18				0.51		5,270.84
Total	**5.75**	**47.40**	**23.68**	**0.05**	**9.04**	**2.18**	**11.22**	**4.97**	**2.18**	**7.15**				**0.51**		**5,270.84**

Unmitigated Construction Off-Site

	ROG	NOx	CO	SO2	Fugitive PM10	Exhaust PM10	PM10 Total	Fugitive PM2.5	Exhaust PM2.5	PM2.5 Total	Bio- CO2	NBio- CO2	Total CO2	CH4	N2O	CO2e

Category	lb/day										lb/day					
Hauling	0.00	0.00	0.00	0.00	0.00	0.00	0.00	0.00	0.00	0.00				0.00		0.00
Vendor	0.00	0.00	0.00	0.00	0.00	0.00	0.00	0.00	0.00	0.00				0.00		0.00
Worker	0.14	0.15	1.45	0.00	0.28	0.01	0.29	0.01	0.01	0.02				0.01		218.77
Total	**0.14**	**0.15**	**1.45**	**0.00**	**0.28**	**0.01**	**0.29**	**0.01**	**0.01**	**0.02**				**0.01**		**218.77**

Mitigated Construction On-Site

	ROG	NOx	CO	SO2	Fugitive PM10	Exhaust PM10	PM10 Total	Fugitive PM2.5	Exhaust PM2.5	PM2.5 Total	Bio- CO2	NBio- CO2	Total CO2	CH4	N2O	CO2e
Category	lb/day										lb/day					
Fugitive Dust					4.07	0.00	4.07	2.23	0.00	2.23						0.00
Off-Road	5.75	47.40	23.68	0.05		2.18	2.18		2.18	2.18				0.51		5,270.84
Total	**5.75**	**47.40**	**23.68**	**0.05**	**4.07**	**2.18**	**6.25**	**2.23**	**2.18**	**4.41**				**0.51**		**5,270.84**

Mitigated Construction Off-Site

	ROG	NOx	CO	SO2	Fugitive PM10	Exhaust PM10	PM10 Total	Fugitive PM2.5	Exhaust PM2.5	PM2.5 Total	Bio- CO2	NBio- CO2	Total CO2	CH4	N2O	CO2e
Category	lb/day										lb/day					
Hauling	0.00	0.00	0.00	0.00	0.00	0.00	0.00	0.00	0.00	0.00				0.00		0.00
Vendor	0.00	0.00	0.00	0.00	0.00	0.00	0.00	0.00	0.00	0.00				0.00		0.00
Worker	0.14	0.15	1.45	0.00	0.28	0.01	0.29	0.01	0.01	0.02				0.01		218.77
Total	**0.14**	**0.15**	**1.45**	**0.00**	**0.28**	**0.01**	**0.29**	**0.01**	**0.01**	**0.02**				**0.01**		**218.77**

3.3 Intersection improvements - 2012

Unmitigated Construction On-Site

	ROG	NOx	CO	SO2	Fugitive PM10	Exhaust PM10	PM10 Total	Fugitive PM2.5	Exhaust PM2.5	PM2.5 Total	Bio- CO2	NBio- CO2	Total CO2	CH4	N2O	CO2e

Category	lb/day										lb/day					
Off-Road	0.46	3.04	1.95	0.00		0.25	0.25		0.25	0.25				0.04		296.92
Total	**0.46**	**3.04**	**1.95**	**0.00**		**0.25**	**0.25**		**0.25**	**0.25**				**0.04**		**296.92**

Unmitigated Construction Off-Site

	ROG	NOx	CO	SO2	Fugitive PM10	Exhaust PM10	PM10 Total	Fugitive PM2.5	Exhaust PM2.5	PM2.5 Total	Bio- CO2	NBio- CO2	Total CO2	CH4	N2O	CO2e
Category	lb/day										lb/day					
Hauling	0.00	0.00	0.00	0.00	0.00	0.00	0.00	0.00	0.00	0.00				0.00		0.00
Vendor	0.00	0.00	0.00	0.00	0.00	0.00	0.00	0.00	0.00	0.00				0.00		0.00
Worker	0.03	0.03	0.32	0.00	0.06	0.00	0.06	0.00	0.00	0.00				0.00		48.62
Total	**0.03**	**0.03**	**0.32**	**0.00**	**0.06**	**0.00**	**0.06**	**0.00**	**0.00**	**0.00**				**0.00**		**48.62**

Mitigated Construction On-Site

	ROG	NOx	CO	SO2	Fugitive PM10	Exhaust PM10	PM10 Total	Fugitive PM2.5	Exhaust PM2.5	PM2.5 Total	Bio- CO2	NBio- CO2	Total CO2	CH4	N2O	CO2e
Category	lb/day										lb/day					
Off-Road	0.46	3.04	1.95	0.00		0.25	0.25		0.25	0.25				0.04		296.92
Total	**0.46**	**3.04**	**1.95**	**0.00**		**0.25**	**0.25**		**0.25**	**0.25**				**0.04**		**296.92**

Mitigated Construction Off-Site

	ROG	NOx	CO	SO2	Fugitive PM10	Exhaust PM10	PM10 Total	Fugitive PM2.5	Exhaust PM2.5	PM2.5 Total	Bio- CO2	NBio- CO2	Total CO2	CH4	N2O	CO2e
Category	lb/day										lb/day					
Hauling	0.00	0.00	0.00	0.00	0.00	0.00	0.00	0.00	0.00	0.00				0.00		0.00

Vendor	0.00	0.00	0.00	0.00	0.00	0.00	0.00	0.00	0.00	0.00				0.00		0.00
Worker	0.03	0.03	0.32	0.00	0.06	0.00	0.06	0.00	0.00	0.00				0.00		48.62
Total	**0.03**	**0.03**	**0.32**	**0.00**	**0.06**	**0.00**	**0.06**	**0.00**	**0.00**	**0.00**				**0.00**		**48.62**

4.0 Mobile Detail

4.1 Mitigation Measures Mobile

	ROG	NOx	CO	SO2	Fugitive PM10	Exhaust PM10	PM10 Total	Fugitive PM2.5	Exhaust PM2.5	PM2.5 Total	Bio- CO2	NBio- CO2	Total CO2	CH4	N2O	CO2e
Category	lb/day										lb/day					
Mitigated	1.03	2.39	9.43	0.01	1.22	0.08	1.31	0.04	0.08	0.12				0.07		1,175.63
Unmitigated	1.03	2.39	9.43	0.01	1.22	0.08	1.31	0.04	0.08	0.12				0.07		1,175.63
Total	**NA**	**NA**	**NA**	**NA**	**NA**	**NA**	**NA**	**NA**	**NA**	**NA**	**NA**	**NA**	**NA**	**NA**	**NA**	**NA**

4.2 Trip Summary Information

	Average Daily Trip Rate			Unmitigated	Mitigated
Land Use	Weekday	Saturday	Sunday	Annual VMT	Annual VMT
City Park	188.00	188.00	188.00	370,080	370,080
Total	188.00	188.00	188.00	370,080	370,080

4.3 Trip Type Information

	Miles			Trip %		
Land Use	H-W or C-W	H-S or C-C	H-O or C-NW	H-W or C-W	H-S or C-C	H-O or C-NW
City Park	8.90	13.30	7.40	0.00	0.00	100.00

Kenneth Hahn Eastern Ridgeline Phase 2 021512

Los Angeles-South Coast County, Summer

1.0 Project Characteristics

1.1 Land Usage

Land Uses	Size	Metric
City Park	1	Acre

1.2 Other Project Characteristics

Urbanization	Urban	**Wind Speed (m/s)**		**Utility Company**	Los Angeles Department of Water & Power
Climate Zone	11		2.2		
		Precipitation Freq (Days)			
			33		

1.3 User Entered Comments

Project Characteristics -

Land Use -

Construction Phase - Trail-grading 6/4-11/30/2012; Intersection-bldg 8/6-10/2012

Off-road Equipment - concrete saw for 5 days covers demo and conc mixer

Off-road Equipment - 2 dozer, 2 loader, exc, 2 OH truck- OFFROAD 2011 load factors

Trips and VMT - 2 workers-4 trips for intersection

Grading - no export of soil

Vehicle Trips - trip rates for 94 RT/188 1-way per day; 1 way

Landscape Equipment - no new landscape maint

Water And Wastewater - no long-term water use

Construction Off-road Equipment Mitigation -

Mobile Commute Mitigation -

2.0 Emissions Summary

2.1 Overall Construction (Maximum Daily Emission)

Unmitigated Construction

	ROG	NOx	CO	SO2	Fugitive PM10	Exhaust PM10	PM10 Total	Fugitive PM2.5	Exhaust PM2.5	PM2.5 Total	Bio- CO2	NBio- CO2	Total CO2	CH4	N2O	CO2e
Year	lb/day										lb/day					
2012	6.37	50.60	27.50	0.05	9.38	2.44	11.82	4.98	2.44	7.42			0.00	0.57	0.00	5,856.34
Total	**NA**	**NA**	**NA**	**NA**	**NA**	**NA**	**NA**	**NA**	**NA**	**NA**	**NA**	**NA**	**NA**	**NA**	**NA**	**NA**

Mitigated Construction

	ROG	NOx	CO	SO2	Fugitive PM10	Exhaust PM10	PM10 Total	Fugitive PM2.5	Exhaust PM2.5	PM2.5 Total	Bio- CO2	NBio- CO2	Total CO2	CH4	N2O	CO2e
Year	lb/day										lb/day					
2012	6.37	50.60	27.50	0.05	4.41	2.44	6.85	2.25	2.44	4.69			0.00	0.57	0.00	5,856.34
Total	**NA**	**NA**	**NA**	**NA**	**NA**	**NA**	**NA**	**NA**	**NA**	**NA**	**NA**	**NA**	**NA**	**NA**	**NA**	**NA**

2.2 Overall Operational

Unmitigated Operational

	ROG	NOx	CO	SO2	Fugitive PM10	Exhaust PM10	PM10 Total	Fugitive PM2.5	Exhaust PM2.5	PM2.5 Total	Bio- CO2	NBio- CO2	Total CO2	CH4	N2O	CO2e
Category	lb/day										lb/day					
Area	0.00	0.00	0.00	0.00		0.00	0.00		0.00	0.00				0.00		0.00
Energy	0.00	0.00	0.00	0.00		0.00	0.00		0.00	0.00				0.00	0.00	0.00
Mobile	0.97	2.20	9.28	0.01	1.22	0.08	1.30	0.04	0.08	0.12				0.07		1,252.24
Total	**0.97**	**2.20**	**9.28**	**0.01**	**1.22**	**0.08**	**1.30**	**0.04**	**0.08**	**0.12**				**0.07**	**0.00**	**1,252.24**

Mitigated Operational

	ROG	NOx	CO	SO2	Fugitive PM10	Exhaust PM10	PM10 Total	Fugitive PM2.5	Exhaust PM2.5	PM2.5 Total	Bio- CO2	NBio- CO2	Total CO2	CH4	N2O	CO2e
Category	lb/day										lb/day					
Area	0.00	0.00	0.00	0.00		0.00	0.00		0.00	0.00				0.00		0.00
Energy	0.00	0.00	0.00	0.00		0.00	0.00		0.00	0.00				0.00	0.00	0.00
Mobile	0.97	2.20	9.28	0.01	1.22	0.08	1.30	0.04	0.08	0.12				0.07		1,252.24
Total	**0.97**	**2.20**	**9.28**	**0.01**	**1.22**	**0.08**	**1.30**	**0.04**	**0.08**	**0.12**				**0.07**	**0.00**	**1,252.24**

3.0 Construction Detail

3.1 Mitigation Measures Construction

Water Exposed Area

3.2 Trail construction - 2012

Unmitigated Construction On-Site

	ROG	NOx	CO	SO2	Fugitive PM10	Exhaust PM10	PM10 Total	Fugitive PM2.5	Exhaust PM2.5	PM2.5 Total	Bio- CO2	NBio- CO2	Total CO2	CH4	N2O	CO2e
Category	lb/day										lb/day					
Fugitive Dust					9.04	0.00	9.04	4.97	0.00	4.97						0.00
Off-Road	5.75	47.40	23.68	0.05		2.18	2.18		2.18	2.18				0.51		5,270.84
Total	**5.75**	**47.40**	**23.68**	**0.05**	**9.04**	**2.18**	**11.22**	**4.97**	**2.18**	**7.15**				**0.51**		**5,270.84**

Unmitigated Construction Off-Site

	ROG	NOx	CO	SO2	Fugitive PM10	Exhaust PM10	PM10 Total	Fugitive PM2.5	Exhaust PM2.5	PM2.5 Total	Bio- CO2	NBio- CO2	Total CO2	CH4	N2O	CO2e

Category	lb/day										lb/day					
Hauling	0.00	0.00	0.00	0.00	0.00	0.00	0.00	0.00	0.00	0.00				0.00		0.00
Vendor	0.00	0.00	0.00	0.00	0.00	0.00	0.00	0.00	0.00	0.00				0.00		0.00
Worker	0.13	0.13	1.53	0.00	0.28	0.01	0.29	0.01	0.01	0.02				0.01		236.11
Total	**0.13**	**0.13**	**1.53**	**0.00**	**0.28**	**0.01**	**0.29**	**0.01**	**0.01**	**0.02**				**0.01**		**236.11**

Mitigated Construction On-Site

	ROG	NOx	CO	SO2	Fugitive PM10	Exhaust PM10	PM10 Total	Fugitive PM2.5	Exhaust PM2.5	PM2.5 Total	Bio- CO2	NBio- CO2	Total CO2	CH4	N2O	CO2e
Category	lb/day										lb/day					
Fugitive Dust					4.07	0.00	4.07	2.23	0.00	2.23						0.00
Off-Road	5.75	47.40	23.68	0.05		2.18	2.18		2.18	2.18				0.51		5,270.84
Total	**5.75**	**47.40**	**23.68**	**0.05**	**4.07**	**2.18**	**6.25**	**2.23**	**2.18**	**4.41**				**0.51**		**5,270.84**

Mitigated Construction Off-Site

	ROG	NOx	CO	SO2	Fugitive PM10	Exhaust PM10	PM10 Total	Fugitive PM2.5	Exhaust PM2.5	PM2.5 Total	Bio- CO2	NBio- CO2	Total CO2	CH4	N2O	CO2e
Category	lb/day										lb/day					
Hauling	0.00	0.00	0.00	0.00	0.00	0.00	0.00	0.00	0.00	0.00				0.00		0.00
Vendor	0.00	0.00	0.00	0.00	0.00	0.00	0.00	0.00	0.00	0.00				0.00		0.00
Worker	0.13	0.13	1.53	0.00	0.28	0.01	0.29	0.01	0.01	0.02				0.01		236.11
Total	**0.13**	**0.13**	**1.53**	**0.00**	**0.28**	**0.01**	**0.29**	**0.01**	**0.01**	**0.02**				**0.01**		**236.11**

3.3 Intersection improvements - 2012

Unmitigated Construction On-Site

	ROG	NOx	CO	SO2	Fugitive PM10	Exhaust PM10	PM10 Total	Fugitive PM2.5	Exhaust PM2.5	PM2.5 Total	Bio- CO2	NBio- CO2	Total CO2	CH4	N2O	CO2e

Category	lb/day										lb/day					
Off-Road	0.46	3.04	1.95	0.00		0.25	0.25		0.25	0.25				0.04		296.92
Total	**0.46**	**3.04**	**1.95**	**0.00**		**0.25**	**0.25**		**0.25**	**0.25**				**0.04**		**296.92**

Unmitigated Construction Off-Site

	ROG	NOx	CO	SO2	Fugitive PM10	Exhaust PM10	PM10 Total	Fugitive PM2.5	Exhaust PM2.5	PM2.5 Total	Bio- CO2	NBio- CO2	Total CO2	CH4	N2O	CO2e
Category	lb/day										lb/day					
Hauling	0.00	0.00	0.00	0.00	0.00	0.00	0.00	0.00	0.00	0.00				0.00		0.00
Vendor	0.00	0.00	0.00	0.00	0.00	0.00	0.00	0.00	0.00	0.00				0.00		0.00
Worker	0.03	0.03	0.34	0.00	0.06	0.00	0.06	0.00	0.00	0.00				0.00		52.47
Total	**0.03**	**0.03**	**0.34**	**0.00**	**0.06**	**0.00**	**0.06**	**0.00**	**0.00**	**0.00**				**0.00**		**52.47**

Mitigated Construction On-Site

	ROG	NOx	CO	SO2	Fugitive PM10	Exhaust PM10	PM10 Total	Fugitive PM2.5	Exhaust PM2.5	PM2.5 Total	Bio- CO2	NBio- CO2	Total CO2	CH4	N2O	CO2e
Category	lb/day										lb/day					
Off-Road	0.46	3.04	1.95	0.00		0.25	0.25		0.25	0.25				0.04		296.92
Total	**0.46**	**3.04**	**1.95**	**0.00**		**0.25**	**0.25**		**0.25**	**0.25**				**0.04**		**296.92**

Mitigated Construction Off-Site

	ROG	NOx	CO	SO2	Fugitive PM10	Exhaust PM10	PM10 Total	Fugitive PM2.5	Exhaust PM2.5	PM2.5 Total	Bio- CO2	NBio- CO2	Total CO2	CH4	N2O	CO2e
Category	lb/day										lb/day					
Hauling	0.00	0.00	0.00	0.00	0.00	0.00	0.00	0.00	0.00	0.00				0.00		0.00

Vendor	0.00	0.00	0.00	0.00	0.00	0.00	0.00	0.00	0.00	0.00				0.00		0.00
Worker	0.03	0.03	0.34	0.00	0.06	0.00	0.06	0.00	0.00	0.00				0.00		52.47
Total	**0.03**	**0.03**	**0.34**	**0.00**	**0.06**	**0.00**	**0.06**	**0.00**	**0.00**	**0.00**				**0.00**		**52.47**

4.0 Mobile Detail

4.1 Mitigation Measures Mobile

	ROG	NOx	CO	SO2	Fugitive PM10	Exhaust PM10	PM10 Total	Fugitive PM2.5	Exhaust PM2.5	PM2.5 Total	Bio- CO2	NBio- CO2	Total CO2	CH4	N2O	CO2e
Category	lb/day										lb/day					
Mitigated	0.97	2.20	9.28	0.01	1.22	0.08	1.30	0.04	0.08	0.12				0.07		1,252.24
Unmitigated	0.97	2.20	9.28	0.01	1.22	0.08	1.30	0.04	0.08	0.12				0.07		1,252.24
Total	**NA**	**NA**	**NA**	**NA**	**NA**	**NA**	**NA**	**NA**	**NA**	**NA**	**NA**	**NA**	**NA**	**NA**	**NA**	**NA**

4.2 Trip Summary Information

	Average Daily Trip Rate			Unmitigated	Mitigated
Land Use	Weekday	Saturday	Sunday	Annual VMT	Annual VMT
City Park	188.00	188.00	188.00	370,080	370,080
Total	188.00	188.00	188.00	370,080	370,080

4.3 Trip Type Information

	Miles			Trip %		
Land Use	H-W or C-W	H-S or C-C	H-O or C-NW	H-W or C-W	H-S or C-C	H-O or C-NW
City Park	8.90	13.30	7.40	0.00	0.00	100.00

Kenneth Hahn Eastern Ridgeline Phase 2 021512

Los Angeles-South Coast County, Winter

1.0 Project Characteristics

1.1 Land Usage

Land Uses	Size	Metric
City Park	1	Acre

1.2 Other Project Characteristics

Urbanization	Urban	**Wind Speed (m/s)**		**Utility Company**	Los Angeles Department of Water & Power
Climate Zone	11		2.2		
		Precipitation Freq (Days)			
			33		

1.3 User Entered Comments

Project Characteristics -

Land Use -

Construction Phase - Trail-grading 6/4-11/30/2012; Intersection-bldg 8/6-10/2012

Off-road Equipment - concrete saw for 5 days covers demo and conc mixer

Off-road Equipment - For LST - dozer, loader, exc, OH truck- OFFROAD 2011 load factors

Trips and VMT - 2 workers-4 trips for intersection

Grading - no export of soil; 0.25 acre for LST

Vehicle Trips - trip rates for 94 RT/188 1-way per day; 1 way

Landscape Equipment - no new landscape maint

Water And Wastewater - no long-term water use

Construction Off-road Equipment Mitigation -

Mobile Commute Mitigation -

Highlighed data used for LST analysis

2.0 Emissions Summary

2.1 Overall Construction (Maximum Daily Emission)

Unmitigated Construction

	ROG	NOx	CO	SO2	Fugitive PM10	Exhaust PM10	PM10 Total	Fugitive PM2.5	Exhaust PM2.5	PM2.5 Total	Bio- CO2	NBio- CO2	Total CO2	CH4	N2O	CO2e
Year	lb/day										lb/day					
2012	3.67	28.75	15.93	0.03	4.67	1.46	6.13	2.49	1.46	3.95			0.00	0.33	0.00	3,278.40
Total	**NA**	**NA**	**NA**	**NA**	**NA**	**NA**	**NA**	**NA**	**NA**	**NA**	**NA**	**NA**	**NA**	**NA**	**NA**	**NA**

Mitigated Construction

	ROG	NOx	CO	SO2	Fugitive PM10	Exhaust PM10	PM10 Total	Fugitive PM2.5	Exhaust PM2.5	PM2.5 Total	Bio- CO2	NBio- CO2	Total CO2	CH4	N2O	CO2e
Year	lb/day										lb/day					
2012	3.67	28.75	15.93	0.03	2.19	1.46	3.65	1.12	1.46	2.58			0.00	0.33	0.00	3,278.40
Total	**NA**	**NA**	**NA**	**NA**	**NA**	**NA**	**NA**	**NA**	**NA**	**NA**	**NA**	**NA**	**NA**	**NA**	**NA**	**NA**

3.0 Construction Detail

3.1 Mitigation Measures Construction

Water Exposed Area

3.2 Trail construction - 2012

Unmitigated Construction On-Site

	ROG	NOx	CO	SO2	Fugitive PM10	Exhaust PM10	PM10 Total	Fugitive PM2.5	Exhaust PM2.5	PM2.5 Total	Bio- CO2	NBio- CO2	Total CO2	CH4	N2O	CO2e

Category	lb/day										lb/day					
Fugitive Dust					4.52	0.00	4.52	2.48	0.00	2.48						0.00
Off-Road	3.13	25.62	13.17	0.03		1.20	1.20		1.20	1.20				0.28		2,859.94
Total	**3.13**	**25.62**	**13.17**	**0.03**	**4.52**	**1.20**	**5.72**	**2.48**	**1.20**	**3.68**				**0.28**		**2,859.94**

Unmitigated Construction Off-Site

	ROG	NOx	CO	SO2	Fugitive PM10	Exhaust PM10	PM10 Total	Fugitive PM2.5	Exhaust PM2.5	PM2.5 Total	Bio- CO2	NBio- CO2	Total CO2	CH4	N2O	CO2e
Category	lb/day										lb/day					
Hauling	0.00	0.00	0.00	0.00	0.00	0.00	0.00	0.00	0.00	0.00				0.00		0.00
Vendor	0.00	0.00	0.00	0.00	0.00	0.00	0.00	0.00	0.00	0.00				0.00		0.00
Worker	0.08	0.08	0.81	0.00	0.15	0.01	0.16	0.01	0.01	0.01				0.01		121.54
Total	**0.08**	**0.08**	**0.81**	**0.00**	**0.15**	**0.01**	**0.16**	**0.01**	**0.01**	**0.01**				**0.01**		**121.54**

Mitigated Construction On-Site

	ROG	NOx	CO	SO2	Fugitive PM10	Exhaust PM10	PM10 Total	Fugitive PM2.5	Exhaust PM2.5	PM2.5 Total	Bio- CO2	NBio- CO2	Total CO2	CH4	N2O	CO2e
Category	lb/day										lb/day					
Fugitive Dust					2.03	0.00	2.03	1.12	0.00	1.12						0.00
Off-Road	3.13	25.62	13.17	0.03		1.20	1.20		1.20	1.20				0.28		2,859.94
Total	**3.13**	**25.62**	**13.17**	**0.03**	**2.03**	**1.20**	**3.23**	**1.12**	**1.20**	**2.32**				**0.28**		**2,859.94**

Kenneth Hahn Eastern Ridgeline Phase 2 021512

Los Angeles-South Coast County, Annual

1.0 Project Characteristics

1.1 Land Usage

Land Uses	Size	Metric
City Park	1	Acre

1.2 Other Project Characteristics

Urbanization	Urban	**Wind Speed (m/s)**		**Utility Company**	Los Angeles Department of Water & Power
Climate Zone	11		2.2		
		Precipitation Freq (Days)			
			33		

1.3 User Entered Comments

Project Characteristics -

Land Use -

Construction Phase - Trail-grading 6/4-11/30/2012; Intersection-bldg 8/6-10/2012

Off-road Equipment - concrete saw for 5 days covers demo and conc mixer

Off-road Equipment - 2 dozer, 2 loader, exc, 2 OH truck- OFFROAD 2011 load factors

Trips and VMT - 2 workers-4 trips for intersection

Grading - no export of soil

Vehicle Trips - trip rates for 94 RT/188 1-way per day; 1 way

Landscape Equipment - no new landscape maint

Water And Wastewater - no long-term water use

Construction Off-road Equipment Mitigation -

Mobile Commute Mitigation -

2.0 Emissions Summary

2.1 Overall Construction

Unmitigated Construction

	ROG	NOx	CO	SO2	Fugitive PM10	Exhaust PM10	PM10 Total	Fugitive PM2.5	Exhaust PM2.5	PM2.5 Total	Bio- CO2	NBio- CO2	Total CO2	CH4	N2O	CO2e
Year	tons/yr										MT/yr					
2012	0.38	3.10	1.64	0.00	0.60	0.14	0.75	0.32	0.14	0.47			324.06	0.03	0.00	324.71
Total	**0.38**	**3.10**	**1.64**	**0.00**	**0.60**	**0.14**	**0.75**	**0.32**	**0.14**	**0.47**			**324.06**	**0.03**	**0.00**	**324.71**

Mitigated Construction

	ROG	NOx	CO	SO2	Fugitive PM10	Exhaust PM10	PM10 Total	Fugitive PM2.5	Exhaust PM2.5	PM2.5 Total	Bio- CO2	NBio- CO2	Total CO2	CH4	N2O	CO2e
Year	tons/yr										MT/yr					
2012	0.38	3.10	1.64	0.00	0.28	0.14	0.42	0.15	0.14	0.29			324.06	0.03	0.00	324.71
Total	**0.38**	**3.10**	**1.64**	**0.00**	**0.28**	**0.14**	**0.42**	**0.15**	**0.14**	**0.29**			**324.06**	**0.03**	**0.00**	**324.71**

2.2 Overall Operational

Unmitigated Operational

	ROG	NOx	CO	SO2	Fugitive PM10	Exhaust PM10	PM10 Total	Fugitive PM2.5	Exhaust PM2.5	PM2.5 Total	Bio- CO2	NBio- CO2	Total CO2	CH4	N2O	CO2e
Category	tons/yr										MT/yr					
Area	0.00	0.00	0.00	0.00		0.00	0.00		0.00	0.00			0.00	0.00	0.00	0.00
Energy	0.00	0.00	0.00	0.00		0.00	0.00		0.00	0.00			0.00	0.00	0.00	0.00
Mobile	0.18	0.41	1.72	0.00	0.20	0.01	0.21	0.01	0.01	0.02			197.65	0.01	0.00	197.90
Waste						0.00	0.00		0.00	0.00			0.02	0.00	0.00	0.04
Water						0.00	0.00		0.00	0.00			0.00	0.00	0.00	0.00

Total	**0.18**	**0.41**	**1.72**	**0.00**	**0.20**	**0.01**	**0.21**	**0.01**	**0.01**	**0.02**			**197.67**	**0.01**	**0.00**	**197.94**

Mitigated Operational

	ROG	NOx	CO	SO2	Fugitive PM10	Exhaust PM10	PM10 Total	Fugitive PM2.5	Exhaust PM2.5	PM2.5 Total	Bio- CO2	NBio- CO2	Total CO2	CH4	N2O	CO2e
Category	tons/yr										MT/yr					
Area	0.00	0.00	0.00	0.00		0.00	0.00		0.00	0.00			0.00	0.00	0.00	0.00
Energy	0.00	0.00	0.00	0.00		0.00	0.00		0.00	0.00			0.00	0.00	0.00	0.00
Mobile	0.18	0.41	1.72	0.00	0.20	0.01	0.21	0.01	0.01	0.02			197.65	0.01	0.00	197.90
Waste						0.00	0.00		0.00	0.00			0.02	0.00	0.00	0.04
Water						0.00	0.00		0.00	0.00			0.00	0.00	0.00	0.00
Total	**0.18**	**0.41**	**1.72**	**0.00**	**0.20**	**0.01**	**0.21**	**0.01**	**0.01**	**0.02**			**197.67**	**0.01**	**0.00**	**197.94**

3.0 Construction Detail

3.1 Mitigation Measures Construction

Water Exposed Area

3.2 Trail construction - 2012

Unmitigated Construction On-Site

	ROG	NOx	CO	SO2	Fugitive PM10	Exhaust PM10	PM10 Total	Fugitive PM2.5	Exhaust PM2.5	PM2.5 Total	Bio- CO2	NBio- CO2	Total CO2	CH4	N2O	CO2e
Category	tons/yr										MT/yr					
Fugitive Dust					0.59	0.00	0.59	0.32	0.00	0.32			0.00	0.00	0.00	0.00
Off-Road	0.37	3.08	1.54	0.00		0.14	0.14		0.14	0.14			310.09	0.03	0.00	310.72
Total	**0.37**	**3.08**	**1.54**	**0.00**	**0.59**	**0.14**	**0.73**	**0.32**	**0.14**	**0.46**			**310.09**	**0.03**	**0.00**	**310.72**

Unmitigated Construction Off-Site

	ROG	NOx	CO	SO2	Fugitive PM10	Exhaust PM10	PM10 Total	Fugitive PM2.5	Exhaust PM2.5	PM2.5 Total	Bio- CO2	NBio- CO2	Total CO2	CH4	N2O	CO2e
Category	tons/yr										MT/yr					
Hauling	0.00	0.00	0.00	0.00	0.00	0.00	0.00	0.00	0.00	0.00			0.00	0.00	0.00	0.00
Vendor	0.00	0.00	0.00	0.00	0.00	0.00	0.00	0.00	0.00	0.00			0.00	0.00	0.00	0.00
Worker	0.01	0.01	0.10	0.00	0.02	0.00	0.02	0.00	0.00	0.00			13.19	0.00	0.00	13.20
Total	**0.01**	**0.01**	**0.10**	**0.00**	**0.02**	**0.00**	**0.02**	**0.00**	**0.00**	**0.00**			**13.19**	**0.00**	**0.00**	**13.20**

Mitigated Construction On-Site

	ROG	NOx	CO	SO2	Fugitive PM10	Exhaust PM10	PM10 Total	Fugitive PM2.5	Exhaust PM2.5	PM2.5 Total	Bio- CO2	NBio- CO2	Total CO2	CH4	N2O	CO2e
Category	tons/yr										MT/yr					
Fugitive Dust					0.26	0.00	0.26	0.15	0.00	0.15			0.00	0.00	0.00	0.00
Off-Road	0.37	3.08	1.54	0.00		0.14	0.14		0.14	0.14			310.09	0.03	0.00	310.72
Total	**0.37**	**3.08**	**1.54**	**0.00**	**0.26**	**0.14**	**0.40**	**0.15**	**0.14**	**0.29**			**310.09**	**0.03**	**0.00**	**310.72**

Mitigated Construction Off-Site

	ROG	NOx	CO	SO2	Fugitive PM10	Exhaust PM10	PM10 Total	Fugitive PM2.5	Exhaust PM2.5	PM2.5 Total	Bio- CO2	NBio- CO2	Total CO2	CH4	N2O	CO2e
Category	tons/yr										MT/yr					
Hauling	0.00	0.00	0.00	0.00	0.00	0.00	0.00	0.00	0.00	0.00			0.00	0.00	0.00	0.00
Vendor	0.00	0.00	0.00	0.00	0.00	0.00	0.00	0.00	0.00	0.00			0.00	0.00	0.00	0.00
Worker	0.01	0.01	0.10	0.00	0.02	0.00	0.02	0.00	0.00	0.00			13.19	0.00	0.00	13.20
Total	**0.01**	**0.01**	**0.10**	**0.00**	**0.02**	**0.00**	**0.02**	**0.00**	**0.00**	**0.00**			**13.19**	**0.00**	**0.00**	**13.20**

3.3 Intersection improvements - 2012

Unmitigated Construction On-Site

	ROG	NOx	CO	SO2	Fugitive PM10	Exhaust PM10	PM10 Total	Fugitive PM2.5	Exhaust PM2.5	PM2.5 Total	Bio- CO2	NBio- CO2	Total CO2	CH4	N2O	CO2e
Category	tons/yr										MT/yr					
Off-Road	0.00	0.01	0.00	0.00		0.00	0.00		0.00	0.00			0.67	0.00	0.00	0.67
Total	**0.00**	**0.01**	**0.00**	**0.00**		**0.00**	**0.00**		**0.00**	**0.00**			**0.67**	**0.00**	**0.00**	**0.67**

Unmitigated Construction Off-Site

	ROG	NOx	CO	SO2	Fugitive PM10	Exhaust PM10	PM10 Total	Fugitive PM2.5	Exhaust PM2.5	PM2.5 Total	Bio- CO2	NBio- CO2	Total CO2	CH4	N2O	CO2e
Category	tons/yr										MT/yr					
Hauling	0.00	0.00	0.00	0.00	0.00	0.00	0.00	0.00	0.00	0.00			0.00	0.00	0.00	0.00
Vendor	0.00	0.00	0.00	0.00	0.00	0.00	0.00	0.00	0.00	0.00			0.00	0.00	0.00	0.00
Worker	0.00	0.00	0.00	0.00	0.00	0.00	0.00	0.00	0.00	0.00			0.11	0.00	0.00	0.11
Total	**0.00**	**0.00**	**0.00**	**0.00**	**0.00**	**0.00**	**0.00**	**0.00**	**0.00**	**0.00**			**0.11**	**0.00**	**0.00**	**0.11**

Mitigated Construction On-Site

	ROG	NOx	CO	SO2	Fugitive PM10	Exhaust PM10	PM10 Total	Fugitive PM2.5	Exhaust PM2.5	PM2.5 Total	Bio- CO2	NBio- CO2	Total CO2	CH4	N2O	CO2e
Category	tons/yr										MT/yr					
Off-Road	0.00	0.01	0.00	0.00		0.00	0.00		0.00	0.00			0.67	0.00	0.00	0.67
Total	**0.00**	**0.01**	**0.00**	**0.00**		**0.00**	**0.00**		**0.00**	**0.00**			**0.67**	**0.00**	**0.00**	**0.67**

Mitigated Construction Off-Site

	ROG	NOx	CO	SO2	Fugitive PM10	Exhaust PM10	PM10 Total	Fugitive PM2.5	Exhaust PM2.5	PM2.5 Total	Bio- CO2	NBio- CO2	Total CO2	CH4	N2O	CO2e
Category	tons/yr										MT/yr					
Hauling	0.00	0.00	0.00	0.00	0.00	0.00	0.00	0.00	0.00	0.00			0.00	0.00	0.00	0.00
Vendor	0.00	0.00	0.00	0.00	0.00	0.00	0.00	0.00	0.00	0.00			0.00	0.00	0.00	0.00
Worker	0.00	0.00	0.00	0.00	0.00	0.00	0.00	0.00	0.00	0.00			0.11	0.00	0.00	0.11
Total	**0.00**	**0.00**	**0.00**	**0.00**	**0.00**	**0.00**	**0.00**	**0.00**	**0.00**	**0.00**			**0.11**	**0.00**	**0.00**	**0.11**

4.0 Mobile Detail

4.1 Mitigation Measures Mobile

	ROG	NOx	CO	SO2	Fugitive PM10	Exhaust PM10	PM10 Total	Fugitive PM2.5	Exhaust PM2.5	PM2.5 Total	Bio- CO2	NBio- CO2	Total CO2	CH4	N2O	CO2e
Category	tons/yr										MT/yr					
Mitigated	0.18	0.41	1.72	0.00	0.20	0.01	0.21	0.01	0.01	0.02			197.65	0.01	0.00	197.90
Unmitigated	0.18	0.41	1.72	0.00	0.20	0.01	0.21	0.01	0.01	0.02			197.65	0.01	0.00	197.90
Total	**NA**	**NA**	**NA**	**NA**	**NA**	**NA**	**NA**	**NA**	**NA**	**NA**	**NA**	**NA**	**NA**	**NA**	**NA**	**NA**

4.2 Trip Summary Information

	Average Daily Trip Rate			Unmitigated	Mitigated
Land Use	Weekday	Saturday	Sunday	Annual VMT	Annual VMT
City Park	188.00	188.00	188.00	370,080	370,080
Total	188.00	188.00	188.00	370,080	370,080

4.3 Trip Type Information

	Miles			Trip %		
Land Use	H-W or C-W	H-S or C-C	H-O or C-NW	H-W or C-W	H-S or C-C	H-O or C-NW
City Park	8.90	13.30	7.40	0.00	0.00	100.00

APPENDIX B

SUPPLEMENTAL SITE INVESTIGATION TECHNICAL MEMORANDUM

URS

Technical Memorandum

Date: February 17, 2012

To: Ken Chiang, Project Manager
Brownfields & Environmental Restoration Program
Department of Toxic Substance Control

From: Alexis Bahou, PE
Sue Korm
Brian Jacobs, PG, CHG

Subject: ***Results of Supplemental Site Investigation***
Kenneth Hahn Eastern Ridgeline Site
4100 South La Cienega Boulevard
Los Angeles, California

1.0 INTRODUCTION

This Technical Memorandum presents the results and findings of a Supplemental Site Investigation (SSI) conducted at the Kenneth Hahn Eastern Ridgeline ("the Site") within the approximately 380-acre Kenneth Hahn State Recreation Area (Park) located at 4100 South La Cienega Boulevard in the City of Los Angeles, California. The project Site is located northwest of the intersection of Stocker Street and La Brea Avenue. The Site location is shown on Figures 1 and 2.

The Los Angeles County Department of Public Works (DPW) is in the process of constructing a proposed trail line along the Site. In general, the proposed construction and grading operations will be conducted within the top soil layer or upper two (2) feet along the Eastern Ridgeline. This SSI investigation was conducted to assess the soil conditions along the proposed 4,000-foot trail lane prior to construction activities. This information will be used to evaluate chemical impacts and the need for a soils management plan during the proposed construction and grading operations.

2.0 BACKGROUND INFORMATION

Oil was discovered in the Baldwin Hills in the 1920s and oil fields were subsequently developed, covering much of the Park. Oil fields dried up in 1970s. Since its opening in 1983, the Park has continued to expand slightly by acquiring adjacent closed oil fields. The Site is spottily covered with fill material ranging from two (2) to 17.5 feet below ground surface (bgs). The Department of Toxic Substances Control (DTSC) completed a Preliminary Endangerment Assessment (PEA) of the middle section of the ridgeline in July 2005. During the PEA, elevated arsenic was detected in two samples, 42 and 30 milligrams per kilogram (mg/kg); elevated diesel (up to 23,000 mg/kg) and oil (up to 29,000 mg/kg) were detected in several samples; and elevated methane gas of 8.6 percent (%) was detected in SG2 at a depth of 15 feet bgs. The elevated samples were all from the fill material zones.

3.0 OBJECTIVES

The objective of this investigation was to assess the existing soil conditions along the proposed trail line, compare the results to the Preliminary Screening Levels (PSLs) established by the DTSC, briefly discuss potential risks, identify compounds of concern and areas of concern, and present conclusions and recommendations, including a soil management plan for the proposed construction and grading operations.

4.0 SOIL SAMPLING ACTIVITIES

Twenty-one (21) soil borings were advanced at the Site to depths not exceeding three and a half (3.5) feet bgs. The boring locations are shown on Figure 2. Fifteen (15) of the boring locations (R-1 through R-15) were spaced approximately 100 to 200 feet apart along the Upper Ridge portion. Three (3) of the boring locations (S-1 through S-3) were sampled from the soil stock pile located on the Middle Ridge portion, and three borings (L-1 through L-3) were sampled from the Lower Ridge portion.

The following sections describe the pre-field activities, investigative methods and procedures, and the analytical program.

Pre-Field Activities

In accordance with federal and State OSHA regulations (29 CFR 1910.120 and 8CCR 5192), a site-specific Health and Safety Plan (HSP) was prepared to cover the field investigation activities. The HSP identified and described potentially hazardous conditions and substances that may have been encountered during field activities, provided job safety analyses for the specified tasks; specified protective equipment for onsite activities; specified personnel decontamination procedures; and outlined measures to be implemented in the event of emergencies.

Prior to drilling at the Site, Underground Service Alert (USA) was contacted to locate and mark all subsurface utilities and obstructions in the vicinity of the proposed investigation area.

Soil Sampling Activities

On December 9, 2011, URS and DTSC staff supervised the advancement of 21 soil borings (R-1 through R-15, S-1 through S-3, and L-1 through L-3) to depths not exceeding three and a half (3.5) feet bgs. The borings were advanced with the use of a hand auger provided by Strongarm Environmental Inc., of Norwalk, California. The field sampling equipment consisted of a 3.25-inch diameter earth auger attached to a 4-foot long T-bar. To collect soil samples, the hand auger was turned by hand to advance the auger to the appropriate sample depth. The auger was then removed and soil was collected and stored in four (4) ounce laboratory supplied glass jars.

During soil sampling activities, a photo-ionization detector (PID) and a portable x-ray fluorescence (XRF) metal analyzer were used as field screening tools to detect the presence of total volatile organics and heavy metals, respectively, in the soil samples. The PID was also used as to monitor breathing zone concentrations in the work area during soil sampling activities. During soil sampling activities, total organic concentrations were below action levels in the workers breathing zone.

All soil sampling equipment was decontaminated prior to first use, in between uses, and prior to leaving the Site. On-site decontamination methods included brushing the equipment with a stiff

wire brush as approved by DTSC previously. Following drilling and soil sample retrieval, the soil borings were backfilled with native soil.

In general, soil samples were collected from one (1) and two (2) feet bgs from the Upper Ridge, one (1) foot bgs from the Lower Ridge and two (2) or three and a half (3.5) feet bgs from the soil stock pile located on the Middle Ridge. During soil sampling activities, PID and XRF readings and visual observations were also used as a guide to determine if soil samples should be tested for additional analyses. Following sample collection, the soil samples were labeled and stored on-site in an ice filled cooler. Soil samples were then transported off-site to CHEMTEK Environmental Laboratories Inc., a California state-certified laboratory, for chemical analysis under chain-of-custody (COC) documentation. CHEMTEK Environmental Laboratories Inc. is located in Santa Fe Springs, California. COC records were used to document sample collection and shipment to the laboratory for analysis.

Laboratory Analysis

In total, 37 soil samples (33 primary samples and four (4) field duplicates) were collected from the Upper and Lower Ridge and analyzed for TPH as diesel and TPH as oil by EPA Method 8015M, arsenic by EPA method 7060, and lead using Method EPA 7420. Nine (9) soil samples (R-9-2, R-10-2, R-11-1, R-11-2, R-12-2, R-13-1, R-14-2, R-15-2, and L-2-1) were analyzed for Title 22 Metals by EPA 7000-Series Method. Five (5) soil samples (R-9-2, R-10-2, R-11-1, R-11-2, R-12-2) were analyzed for semi-volatile organic compounds (SVOC) including polycyclic aromatic hydrocarbons (PAHs) by EPA Method 8270C.

Soil samples collected from soil stockpiles located on the Middle Ridge (S-1, S-2, and S-3) were analyzed for TPH as diesel and TPH as oil by EPA Method 8015M, Title 22 Metals by EPA Method 7000, and SVOC including PAHs by EPA Method 8270C.

5.0 SOIL SAMPLING INVESTIGATION RESULTS

This section presents the field and laboratory results of the soil sampling investigation activities.

Soil Lithology

The representative soil lithology over the investigation area consisted of clay with silt, sandy silt, silty sand and well to poorly graded sand from the ground surface to approximately three and a half (3.5) feet bgs. Field boring logs for soil borings (R-1 through R-15 and L-1 through L-3) are included as Appendix A. A map presenting the locations of stockpile samples S-1 through S-3 is also provided in AppendiA.

Soil Analytical Results

The laboratory soil analytical results are summarized in Table 1 and Tables B-1, B-2, and B-3 are provided Appendix B. The complete laboratory analytical report and chain-of-custody documentation is presented as Appendix C.

Detectable concentrations of TPH as diesel were identified in eight (8) soil samples. The detected concentrations of TPH as diesel ranged from 80 mg/kg (R-13-2') to 27,000 mg/kg (R-9-2').

TPH as oil was detected in 24 soil samples at concentrations ranging from 11 mg/kg (R-8-1') to 29,000 mg/kg (R-10-12').

Two (2) SVOC compounds, 2-methylnapthalene and naphthalene, were detected in two (2) soil samples (R-9-2 and R-11-1). Concentrations of 2-methylnapthalene ranged from 1,720 micrograms per kilogram (µg/kg) to 5,200 µg/kg and naphthalene ranged from 700 µg/kg to 1,900 µg/kg.

Three (3) PAH compounds, acenaphthene, chrysene and fluorene, were detected in two (2) soil samples (R-9-2 and R-11-1). Acenaphthene was detected at 990 µg/kg, chrysene was detected at 5,100 µg/kg, and fluorene ranged from 570 µg/kg to 2,900 µg/kg.

Metals concentrations were detected in 18 of 39 soil samples collected during soil sampling investigation. A summary of detections is provided below.

- Arsenic was detected in four (4) soil samples at concentrations ranging from 2.1 (R-11-2') to 7.9 mg/kg (R-9-2');
- Barium was detected in 12 soil samples at concentrations ranging from 14.9 (L-2-1') to 165 mg/kg (R-11-2');
- Chromium was detected in 12 soil samples at concentrations ranging from 1.4 (R-14-2') to 30.8 mg/kg (R-9-2');
- Cobalt was detected in 10 soil samples at concentrations ranging from 0.7 (R-15-2') to 1.6 mg/kg (R-9-2');
- Copper was detected in 11 soil samples at concentrations ranging from 0.81 (L-2-1') to 7.7 mg/kg (R-9-2');
- Lead was detected in 17 soil samples at concentrations ranging from 0.62 (R-5-1') to 6.3 mg/kg (R-9-2');
- Mercury was detected in 12 soil samples at concentrations ranging from 0.06 (L-2-1') to 0.35 mg/kg (R-12-2');
- Nickel was detected in 11 soil samples at concentrations ranging from 0.62 (L-2-1') to 6.1 mg/kg (R-9-2');
- Zinc was detected in 11 soil samples at concentrations ranging from 3.4 (L-2-1') to 12.7 mg/kg (R-15-2').

6.0 SOIL MANAGEMENT PLAN

Based on the available data collected in the 2005 PEA and the current SSI, there were no unacceptable risks or hazards associated with direct contact to compounds of potential concerns (COPCs) detected in soil, including metals, SVOCs and PAHs. Metals appear to be within background compared to other sites in southern California. Arsenic was well within the range of concentrations observed in southern California, with an exception of two (2) elevated but isolated detections in deep fill material zones (approximately 15 feet bgs) in the 2005 PEA. Lead was well below the DTSC screening criteria. The maximum reported B(a)P-TE concentration (0.05 mg/kg) was well below the southern California background screening level of 0.9 mg/kg. Based on the range of detection limits for PAHs, 0.2 to 0.7 mg/kg, PAHs are not a chemical of concern at the Site in the upper two (2) feet of soil.

Elevated concentrations of TPH, however, were detected at 1- and 2-feet bgs in soil borings R-9, R-10, R-11 and R-12. These detections confirmed the previous elevated TPH detections in the 2005 PEA and are well above the 10,000 mg/kg TPH screening criteria typically used for southern California sites for aesthetic or odor concerns (not for health or environmental concerns). The TPH is generally weathered, tightly bound to soil and unlikely to present a significant risk to human health. In addition, elevated concentrations of methane gas of 8.6% was detected in SG2 at a depth of 15 feet bgs during the 2005 PEA, exceeding the lower explosive limit (LEL) for methane.

As a precaution, the following soil management practices should be observed during the proposed construction and grading operations:

- Field oversight of grading operations, including spot checks of soils with PID for VOCs and XRF for metals, is recommended with DTSC concurrence.

- Direct contact of TPH contaminated soils, exceeding 10,000 mg/kg as identified during the 2005 PEA and the current SSI, by human bodies should be avoided (due to aesthetic or odor concerns). All construction and maintenance workers should be trained to avoid direct contact with TPH-contaminated soils (e.g., wearing plastic or rubber gloves).

- Any onsite TPH contaminated soils exposed or excavated may remain onsite; however, at least two (2) feet of clean fill material (imported or from onsite sources) should be placed over the TPH-contaminated (10,000 areas where potential contact may occur. With a cap of 2-feet of clean fill, no direct contact or potential health risks would be anticipated for the Site's intended use, namely recreational use of trails.

- Proper disposal requirements imposed by the disposal facility should be followed if offsite disposal of TPH contaminated or stockpiled soils is planned.

- While no unacceptable risks or hazards were identified for the intended land use, namely recreational use of trails, any other use of the Site would require additional site characterization and a human health risk evaluation.

- Enclosed structures (e.g., rest rooms) should not be constructed onsite due to a potential for methane vapor intrusion and accumulation, unless otherwise specially approved by DTSC. Any future structures would require additional characterization (e.g., soil gas survey) and evaluation of the potential for vapor intrusion, including the potential for accumulation of explosive levels of methane.

7.0 CONCLUSIONS AND RECOMMENDATIONS

Samples with elevated TPH as oil and TPH as diesel concentrations above the PSLs were detected in soil borings R-9, R-10, R-11, R-12, and R-15 located in the central portion of the Upper Ridge. TPH as diesel and TPH as oil concentrations in these samples exceeded the PSLs of 10,000 mg/kg. However, these are heavy end carbon chains and it is likely that the TPH in

these samples is weathered and tightly bound to the soil. Further testing of these samples did not indicate elevated levels of PAHs. Detected concentrations of acenaphthylene, chrysene, fluorene, 2-methylnaphthalene, naphthalene, phenanthrene were below the EPA Region IX Regional Screening Levels 27,000 µg/kg, 15,000 µg/kg, 2,300,000 µg/kg, 310,000 µg/kg, 3,600 µg/kg, and 27,000 µg/kg, respectively. The calculated benzo(a)pyrene (B(a)P) equivalent for soil samples R-9-2, R-10-1, R-11-1, R-11-2, R-12-2, S-1-3.5, S-2-2, and S-3-2 were all below the PSL of 0.9 mg/kg (or 900 µg/kg). Detected metals concentrations were all below the PSLs and appear to be within background levels for southern California. Therefore, the soil associated with this area does not pose an unacceptable risk to human health based on the future land use which consists of a proposed trail line along the Site. Any land use other than recreational, would require additional site characterization activities and a re-evaluation of potential health risks for that land use scenario.

Previous PEA sampling at the Site indicated elevated methane was detected at 8.6% in a sample collected from 15 feet bgs (PEA, 2005). The concentration exceeded the LEL for methane. Therefore, structures should not be constructed on-site without additional site characterization of the soil gas and a human health risk evaluation for the new use of the Site.

Soil represented by samples S-1 through S-3 collected from the soil stock pile located on the Middle Ridge portion would be classified as **non-hazardous** waste. If offsite disposal of the stockpile soil is planned, the volume of the stockpiles should be determined and the soil sampling results should be provided to a licensed waste disposal facility for profiling purposes prior to export.

8.0 REFERENCES

California Environmental Protection Agency Department of Toxic Substances Control (Cal/EPA DTSC), July 2005. *Preliminary Endangerment Assessment for Baldwin Hills Conservancy Eastern Ridgeline Site.*

California Environmental Protection Agency Department of Toxic Substances Control (Cal/EPA DTSC), December 5, 2011. *Supplemental Site Investigation Contract No. 11-T1029.*

-oOo-

If you have any questions please call the undersigned at 213.996.2200. This Technical Memorandum was prepared by:

URS CORPORATION

Sue Korm.
Staff Geologist

Alexis Bahou, P.E.
Principal Engineer

Brian Jacobs, P.G., C.HG.
Principal Geologist

Attachments:

Figure 1	Site Location Map
Figure 2	Soil Sampling Locations

Attachments:

Table 1- Summary of Soil Analytical Results
Figure 1 - Site Vicinity Map
Figure 2 - Site Map with Boring Locations
Figure 3 – Stockpile Sampling Locations
Appendix A – Boring Logs
Appendix B – Soil Analytical Results
Appendix C – Laboratory Analytical Reports

TABLES

TABLE 1
SUMMARY OF SOIL ANALYTICAL RESULTS
Kenneth Hahn State Park Eastern Ridgeline Study
Baldwin Hills, California

Analytes	PSL	CHHSL	RSL	TTLC										
					Boring ID:	**L-01**	**L-01**	**L-02**	**L-03**	**R-01**	**R-01**	**R-02**	**R-02**	**R-02**
					Sample ID:	**L-1-1'**	**L-1-1'(DUP)**	**L-2-1'**	**L-3-1'**	**R-1-1'**	**R-1-2'**	**R-2-1'**	**R-2-2'**	**R-2-2' (DUP)**
					Sample Date:	**12/09/2011**	**12/09/2011**	**12/09/2011**	**12/09/2011**	**12/09/2011**	**12/09/2011**	**12/09/2011**	**12/09/2011**	**12/09/2011**
					Sample Depth:	**1.0**	**1.0**	**1.0**	**1.0**	**1.0**	**2.0**	**1.0**	**2.0**	**2.0**
Metals														
Arsenic	12		-	-	mg/kg	ND (<0.50)	ND (<0.50)	ND (<0.50)	ND (<0.50)	ND (<0.50)	ND (<0.50)	ND (<0.50)	ND (<0.50)	ND (<0.50)
Barium		5200	-	-	mg/kg	-	-	**14.9**	-	-	-	-	-	-
Chromium			-	2500	mg/kg	-	-	**1.7**	-	-	-	-	-	-
Cobalt		660	-	-	mg/kg	-	-	ND (<0.50)	-	-	-	-	-	-
Copper		3000	-	-	mg/kg	-	-	**0.81**	-	-	-	-	-	-
Lead		80	-	-	mg/kg	ND (<0.50)	ND (<0.50)	ND (<0.50)	**0.91**	ND (<0.50)	ND (<0.50)	ND (<0.50)	ND (<0.50)	ND (<0.50)
Mercury		18	-	-	mg/kg	-	-	**0.060**	-	-	-	-	-	-
Nickel		1600	-	-	mg/kg	-	-	**0.62**	-	-	-	-	-	-
Zinc		23000	-	-	mg/kg	-	-	**3.4**	-	-	-	-	-	-
Semi-Volatile Organic Compounds														
Acenaphthylene			27000	-	ug/kg	-	-	-	-	-	-	-	-	-
Chrysene			15000	-	ug/kg	-	-	-	-	-	-	-	-	-
Fluorene			2300000	-	ug/kg	-	-	-	-	-	-	-	-	-
2-Methylnaphthalene			310000	-	ug/kg	-	-	-	-	-	-	-	-	-
Naphthalene			3600	-	ug/kg	-	-	-	-	-	-	-	-	-
Phenanthrene			27000	-	ug/kg	-	-	-	-	-	-	-	-	-
B[a]P Equivalent	900		-	-	ug/kg	-	-	-	-	-	-	-	-	-
Total Petroleum Hydrocarbons														
Diesel Range Organics	10000		-	-	mg/kg	ND (<5)	ND (<5)	ND (<5)	ND (<5)	ND (<5)	ND (<5)	ND (<5)	ND (<5)	ND (<5)
Oil Range Organics	10000		-	-	mg/kg	**42**	**36**	**16**	**65**	ND (<10)	ND (<10)	ND (<10)	ND (<10)	ND (<10)

ug/kg - micrograms per kilogram
mg/kg - milligrams per kilogram
PSL - DTSC Project Screening Levels (Risk management level established by DTSC)
CHHSL - California Human Health Screening Level
RSL - EPA Region IX Regional Screening Levels
TTLC - Title 22 Total Threshold Limit Concnetration
Exceeds Screening Value

TABLE 1
SUMMARY OF SOIL ANALYTICAL RESULTS
Kenneth Hahn State Park Eastern Ridgeline Study
Baldwin Hills, California

Analytes	PSL	CHHSL	RSL	TTLC												
					Boring ID:	**R-03**	**R-03**	**R-04**	**R-04**	**R-05**	**R-05**	**R-06**	**R-06**	**R-07**	**R-07**	**R-08**
					Sample ID:	**R-3-1'**	**R-3-2'**	**R-4-1'**	**R-4-2'**	**R-5-1'**	**R-5-2'**	**R-6-1'**	**R-6-2'**	**R-7-1'**	**R-7-2'**	**R-8-1'**
					Sample Date:	**12/09/2011**	**12/09/2011**	**12/09/2011**	**12/09/2011**	**12/09/2011**	**12/09/2011**	**12/09/2011**	**12/09/2011**	**12/09/2011**	**12/09/2011**	**12/09/2011**
					Sample Depth:	**1.0**	**2.0**	**1.0**	**2.0**	**1.0**	**2.0**	**1.0**	**2.0**	**1.0**	**2.0**	**1.0**
Metals																
Arsenic	12		-	-	mg/kg	ND (<0.50)	ND (<0.50)	ND (<0.50)	ND (<0.50)	ND (<0.50)	ND (<0.50)	ND (<0.50)	ND (<0.50)	ND (<0.50)	ND (<0.50)	ND (<0.50)
Barium		5200	-	-	mg/kg	-	-	-	-	-	-	-	-	-	-	-
Chromium			-	2500	mg/kg	-	-	-	-	-	-	-	-	-	-	-
Cobalt		660	-	-	mg/kg	-	-	-	-	-	-	-	-	-	-	-
Copper		3000	-	-	mg/kg	-	-	-	-	-	-	-	-	-	-	-
Lead		80	-	-	mg/kg	ND (<0.50)	ND (<0.50)	ND (<0.50)	ND (<0.50)	**0.62**	ND (<0.50)	ND (<0.50)	ND (<0.50)	**0.93**	ND (<0.50)	ND (<0.50)
Mercury		18	-	-	mg/kg	-	-	-	-	-	-	-	-	-	-	-
Nickel		1600	-	-	mg/kg	-	-	-	-	-	-	-	-	-	-	-
Zinc		23000	-	-	mg/kg	-	-	-	-	-	-	-	-	-	-	-
Semi-Volatile Organic Compounds																
Acenaphthylene			27000	-	ug/kg	-	-	-	-	-	-	-	-	-	-	-
Chrysene			15000	-	ug/kg	-	-	-	-	-	-	-	-	-	-	-
Fluorene			2300000	-	ug/kg	-	-	-	-	-	-	-	-	-	-	-
2-Methylnaphthalene			310000	-	ug/kg	-	-	-	-	-	-	-	-	-	-	-
Naphthalene			3600	-	ug/kg	-	-	-	-	-	-	-	-	-	-	-
Phenanthrene			27000	-	ug/kg	-	-	-	-	-	-	-	-	-	-	-
B[a]P Equivalent	900		-	-	ug/kg	-	-	-	-	-	-	-	-	-	-	-
Total Petroleum Hydrocarbons																
Diesel Range Organics	10000		-	-	mg/kg	ND (<50)	ND (<5)	ND (<5)	ND (<5)	ND (<50)	ND (<5)	ND (<5)	ND (<5)	ND (<50)	ND (<5)	ND (<5)
Oil Range Organics	10000		-	-	mg/kg	**420**	**33**	ND (<10)	ND (<10)	**150**	ND (<10)	**47**	ND (<10)	**250**	ND (<10)	**11**

ug/kg - micrograms per kilogram
mg/kg - milligrams per kilogram
PSL - DTSC Project Screening Levels (Risk management level established by DTSC)
CHHSL - California Human Health Screening Level
RSL - EPA Region IX Regional Screening Levels
TTLC - Title 22 Total Threshold Limit Concnetration
Exceeds Screening Value

TABLE 1
SUMMARY OF SOIL ANALYTICAL RESULTS
Kenneth Hahn State Park Eastern Ridgeline Study
Baldwin Hills, California

Analytes	PSL	CHHSL	RSL	TTLC	Boring ID:	R-08	R-09	R-09	R-10	R-10	R-11	R-11	R-12	R-12	R-12	R-13
					Sample ID:	R-8-2'	R-9-1'	R-9-2'	R-10-1'	R-10-2'	R-11-1'	R-11-2'	R-12-1'	R-12-2'	R-12-2' (DUP)	R-13-1'
					Sample Date:	12/09/2011	12/09/2011	12/09/2011	12/09/2011	12/09/2011	12/09/2011	12/09/2011	12/09/2011	12/09/2011	12/09/2011	12/09/2011
					Sample Depth:	2.0	1.0	2.0	1.0	2.0	1.0	2.0	1.0	2.0	2.0	1.0
Metals																
Arsenic	12		-	-	mg/kg	ND (<0.50)	ND (<0.50)	**7.9**	ND (<0.50)	**5.1**	**4.1**	**2.1**	ND (<0.50)	ND (<0.50)	ND (<0.50)	ND (<0.50)
Barium		5200	-	-	mg/kg	-	-	**96.2**	-	**35.6**	**63.9**	**165**	-	**36**	-	**43.6**
Chromium			-	2500	mg/kg	-	-	**30.8**	-	**16.6**	**16.6**	**6.9**	-	**6.7**	-	**2.2**
Cobalt		660	-	-	mg/kg	-	-	**1.6**	-	**1.0**	**1.1**	**1.3**	-	ND (<0.50)	-	**1.1**
Copper		3000	-	-	mg/kg	-	-	**7.7**	-	**4.2**	**4.1**	**4.0**	-	**2.2**	-	**2.3**
Lead		80	-	-	mg/kg	ND (<0.50)	ND (<0.50)	**6.3**	**1.1**	**3.1**	**4.5**	**2.9**	**1.7**	**2.2**	**1.5**	**2.3**
Mercury		18	-	-	mg/kg	-	-	**0.23**	-	**0.26**	**0.23**	**0.17**	-	**0.29**	-	**0.26**
Nickel		1600	-	-	mg/kg	-	-	**6.1**	-	**3.2**	**3.2**	**3.2**	-	**1.5**	-	**1.5**
Zinc		23000	-	-	mg/kg	-	-	**9.6**	-	**7.2**	**10**	**5.3**	-	**5.2**	-	**3.5**
Semi-Volatile Organic Compounds																
Acenaphthylene			27000	-	ug/kg	-	-	**990**	-	ND (<667)	ND (<500)	ND (<500)	-	ND (<600)	-	-
Chrysene			15000	-	ug/kg	-	-	**5100**	-	ND (<667)	ND (<500)	ND (<500)	-	ND (<600)	-	-
Fluorene			2300000	-	ug/kg	-	-	**2900**	-	ND (<667)	ND (<500)	**570**	-	ND (<600)	-	-
2-Methylnaphthalene			310000	-	ug/kg	-	-	**5200**	-	ND (<667)	ND (<500)	**1720**	-	ND (<600)	-	-
Naphthalene			3600	-	ug/kg	-	-	**1900**	-	ND (<667)	ND (<500)	**700**	-	ND (<600)	-	-
Phenanthrene			27000	-	ug/kg	-	-	**9600**	-	ND (<667)	ND (<500)	ND (<500)	-	ND (<600)	-	-
B[a]P Equivalent	900		-	-	ug/kg	-	-	**51.0**	-	**3.34**	**2.50**	**2.50**	-	**3.00**	-	-
Total Petroleum Hydrocarbons																
Diesel Range Organics	10000		-	-	mg/kg	ND (<5)	ND (<5)	**27000**	**2900**	**24000**	**10000**	**4700**	ND (<10)	**21000**	**24000**	ND (<5)
Oil Range Organics	10000		-	-	mg/kg	**22**	ND (<10)	**25000**	**4200**	**29000**	**13000**	**4700**	**80**	**16000**	**20000**	ND (<10)

ug/kg - micrograms per kilogram
mg/kg - milligrams per kilogram
PSL - DTSC Project Screening Levels (Risk management level established by DTSC)
CHHSL - California Human Health Screening Level
RSL - EPA Region IX Regional Screening Levels
TTLC - Title 22 Total Threshold Limit Concnetration
Exceeds Screening Value

TABLE 1
SUMMARY OF SOIL ANALYTICAL RESULTS
Kenneth Hahn State Park Eastern Ridgeline Study
Baldwin Hills, California

Analytes	PSL	CHHSL	RSL	TTLC	Boring ID:	R-13	R-14	R-14	R-15	R-15	S-01	S-02	S-03
					Sample ID:	R-13-2'	R-14-1'	R-14-2'	R-15-1'	R-15-2'	S-1-3.5'	S-2-2'	S-3-2'
					Sample Date:	12/09/2011	12/09/2011	12/09/2011	12/09/2011	12/09/2011	12/09/2011	12/09/2011	12/09/2011
					Sample Depth:	2.0	1.0	2.0	1.0	2.0	3.5	2.0	2.0
Metals													
Arsenic	12		-	-	mg/kg	ND (<0.50)	ND (<0.50)	ND (<0.50)	ND (<0.50)	ND (<0.50)	ND (<0.50)	ND (<0.50)	ND (<0.50)
Barium		5200	-	-	mg/kg	-	-	**27.3**	-	**84.3**	**85.6**	**45.9**	**48.7**
Chromium			-	2500	mg/kg	-	-	**1.4**	-	**6.8**	**3.3**	**3.5**	**2.5**
Cobalt		660	-	-	mg/kg	-	-	ND (<0.50)	-	**0.7**	**1.5**	**1.3**	**1.4**
Copper		3000	-	-	mg/kg	-	-	ND (<0.50)	-	**2.6**	**3.2**	**2.8**	**2.4**
Lead		80	-	-	mg/kg	**2.1**	ND (<0.50)	**5.9**	ND (<0.50)	**2.1**	**1.8**	**0.95**	**1.0**
Mercury		18	-	-	mg/kg	-	-	**0.17**	-	**0.35**	**0.14**	**0.23**	**0.21**
Nickel		1600	-	-	mg/kg	-	-	ND (<0.50)	-	**1.7**	**2.1**	**2.2**	**1.6**
Zinc		23000	-	-	mg/kg	-	-	ND (<3.0)	-	**12.7**	**4.8**	**4.4**	**3.8**
Semi-Volatile Organic Compounds													
Acenaphthylene			27000	-	ug/kg	-	-	-	-	-	ND (<200)	ND (<200)	ND (<200)
Chrysene			15000	-	ug/kg	-	-	-	-	-	ND (<200)	ND (<200)	ND (<200)
Fluorene			2300000	-	ug/kg	-	-	-	-	-	ND (<200)	ND (<200)	ND (<200)
2-Methylnaphthalene			310000	-	ug/kg	-	-	-	-	-	ND (<200)	ND (<200)	ND (<200)
Naphthalene			3600	-	ug/kg	-	-	-	-	-	ND (<200)	ND (<200)	ND (<200)
Phenanthrene			27000	-	ug/kg	-	-	-	-	-	ND (<200)	ND (<200)	ND (<200)
B[a]P Equivalent	900		-	-	ug/kg	-	-	-	-	-	**1.00**	**1.00**	**1.00**
Total Petroleum Hydrocarbons													
Diesel Range Organics	10000		-	-	mg/kg	**80**	ND (<5)	ND (<5)	ND (<5)	**4100**	ND (<5)	ND (<5)	ND (<5)
Oil Range Organics	10000		-	-	mg/kg	**410**	**15**	ND (<10)	**26**	**4400**	**12**	ND (<10)	**52**

ug/kg - micrograms per kilogram
mg/kg - milligrams per kilogram
PSL - DTSC Project Screening Levels (Risk management level established by DTSC)
CHHSL - California Human Health Screening Level
RSL - EPA Region IX Regional Screening Levels
TTLC - Title 22 Total Threshold Limit Concnetration
Exceeds Screening Value

FIGURES

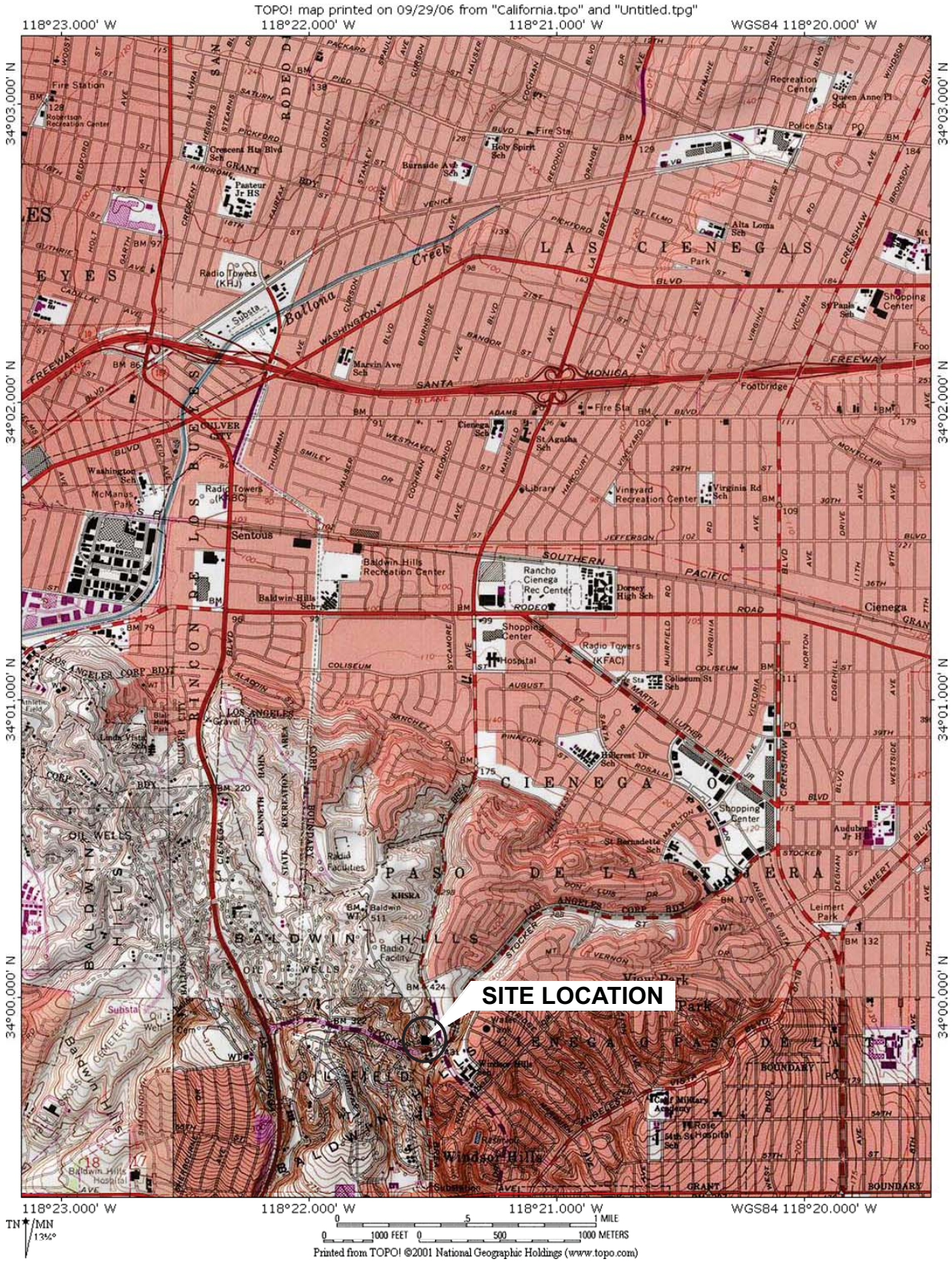

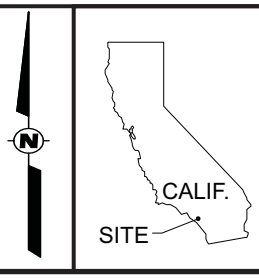

SITE VICINITY MAP

FIGURE 1

Kenneth Hahn State Park
4100 South La Cienega Boulevard
Los Angeles, California
February 9, 2012 Project No. 29403644

URS

I:\PROJECT FILES\DTSC\29403644_DTSC-Kenneth Hahn State Park\400_Technical\450_DRAFT REPORTS\Tech Memo

SITE MAP WITH BORING LOCATIONS

FIGURE 2

Kenneth Hahn State Park
4100 South La Cienega Boulevard
Los Angeles, California
February 9, 2012 Project No. 29403644

URS

I:\PROJECT FILES\DTSC\29403644_DTSC-Kenneth Hahn State Park\400_Technical\450_DRAFT REPORTS\Tech Memo

Approx. Scale
1" = 50'

STOCKPILE SAMPLING LOCATIONS

FIGURE 3

Kenneth Hahn State Park
4100 South La Cienega Boulevard
Los Angeles, California
February 9, 2012 Project No. 29403644

URS

I:\PROJECT FILES\DTSC\29403644_DTSC-Kenneth Hahn State Park\400_Technical\450_DRAFT REPORTS\Tech Memo

APPENDIX A

Project: Kenneth Hahn East Ridge Line
Project Location: 4100 South La Cienega Blvd., Los Angeles, CA
Project Number: 29403644.10000

Log of Boring L-1

Date(s) Drilled	12/9/11	Logged By	S. Korm	Checked By	A. Bahou
Drilling Method		Drilling Contractor	Strongarm Environmental	Total Depth of Borehole ft bgs	1.0
Drill Rig Type	None	Borehole Diameter (inches)	3.25	Approx. Surface Elevation ft msl	---
Approx. Depth Groundwater Encountered	Not Encountered	Sampler Type	Hand Auger	Borehole Backfill	Native Material
Comments					

Feet MSL	Depth, feet	SAMPLES Type	SAMPLES Sample ID	Graphic Log	MATERIAL DESCRIPTION	PID Headspace (ppm)	PID Background (ppm)	Sample Time	REMARKS
	0		L-1-1'		Silty SAND (SM): Fine grained, 10 YR 4/3, coarse, dry, no odor or stain	0.0	0.0	1210	
			L-1-1'DUP					1212	
					Boring terminated at 1' bgs.				
	5								
	10								

URS

Project: Kenneth Hahn East Ridge Line
Project Location: 4100 South La Cienega Blvd., Los Angeles, CA
Project Number: 29403644.10000

Log of Boring L-2

Date(s) Drilled	12/9/11	Logged By	S. Korm	Checked By	A. Bahou
Drilling Method		Drilling Contractor	Strongarm Environmental	Total Depth of Borehole ft bgs	1.0
Drill Rig Type	None	Borehole Diameter (inches)	3.25	Approx. Surface Elevation ft msl	---
Approx. Depth Groundwater Encountered	Not Encountered	Sampler Type	Hand Auger	Borehole Backfill	Native Material
Comments					

Feet MSL	Depth, feet	SAMPLES Type	SAMPLES Sample ID	Graphic Log	MATERIAL DESCRIPTION	PID Headspace (ppm)	PID Background (ppm)	Sample Time	REMARKS
	0		L-2-1'		Silty SAND (SM): 10 YR, loose, dry, no odor or stain	0.0	0.0	1216	
					Boring terminated at 1' bgs.				
	5								
	10								

URS

Project: Kenneth Hahn East Ridge Line
Project Location: 4100 South La Cienega Blvd., Los Angeles, CA
Project Number: 29403644.10000

Log of Boring L-3

Date(s) Drilled	12/9/11	Logged By	S. Korm	Checked By	A. Bahou
Drilling Method		Drilling Contractor	Strongarm Environmental	Total Depth of Borehole ft bgs	1.0
Drill Rig Type	None	Borehole Diameter (inches)	3.25	Approx. Surface Elevation ft msl	---
Approx. Depth Groundwater Encountered	Not Encountered	Sampler Type	Hand Auger	Borehole Backfill	Native Material
Comments					

Feet MSL	Depth, feet	SAMPLES Type	SAMPLES Sample ID	Graphic Log	MATERIAL DESCRIPTION	PID Headspace (ppm)	PID Background (ppm)	Sample Time	REMARKS
	0		L-3-1'		Silty SAND (SM): Fine grained, 10 YR 4/2, dry, loose, no odor or stain	0.0	0.0	1220	
					Boring terminated at 1' bgs.				
	5								
	10								

URS

Project: Kenneth Hahn East Ridge Line
Project Location: 4100 South La Cienega Blvd., Los Angeles, CA
Project Number: 29403644.10000

Log of Boring R-1

Date(s) Drilled	12/9/11	Logged By	S. Korm	Checked By	A. Bahou
Drilling Method	Hand Auger	Drilling Contractor	Strongarm Environmental	Total Depth of Borehole ft bgs	2.5
Drill Rig Type	None	Borehole Diameter (inches)	3.25	Approx. Surface Elevation ft msl	---
Approx. Depth Groundwater Encountered	Not Encountered	Sampler Type	Hand Auger	Borehole Backfill	Native Material
Comments					

Feet MSL	Depth, feet	SAMPLES Type	Sample ID	Graphic Log	MATERIAL DESCRIPTION	PID Headspace (ppm)	PID Background (ppm)	Sample Time	REMARKS
	0								
			R-1-1'		Silty SAND (SM): Medium to fine grained, 10 YR 4/4, moist, no odor or stain	0.0	0.0	0747	
			R-1-2'		SAND with silt (SW): 10 YR 5/6, moist, no odor or stain	0.0	0.0	0757	
					Boring terminated at 2.5' bgs.				
	5								
	10								

URS

Project: Kenneth Hahn East Ridge Line
Project Location: 4100 South La Cienega Blvd., Los Angeles, CA
Project Number: 29403644.10000

Log of Boring R-2

Date(s) Drilled	12/9/11	Logged By	S. Korm	Checked By	A. Bahou
Drilling Method	Hand Auger	Drilling Contractor	Strongarm Environmental	Total Depth of Borehole ft bgs	3.0
Drill Rig Type	None	Borehole Diameter (inches)	3.25	Approx. Surface Elevation ft msl	---
Approx. Depth Groundwater Encountered	Not Encountered	Sampler Type	Hand Auger	Borehole Backfill	Native Material
Comments					

Feet MSL	Depth, feet	SAMPLES Type	SAMPLES Sample ID	Graphic Log	MATERIAL DESCRIPTION	PID Headspace (ppm)	PID Background (ppm)	Sample Time	REMARKS
	0								
			R-2-1'		Silty SAND (SM): Fine grained, 10 YR 6/3, moist, no odor or stain	0.0	0.0	0801	
			R-2-2'		Same as above	0.0	0.0	0804	
			R-2-2' DUP					0810	
					Boring terminated at 3' bgs.				
	5								
	10								

URS

Project: Kenneth Hahn East Ridge Line
Project Location: 4100 South La Cienega Blvd., Los Angeles, CA
Project Number: 29403644.10000

Log of Boring R-3

Date(s) Drilled	12/9/11	Logged By	S. Korm	Checked By	A. Bahou
Drilling Method	Hand Auger	Drilling Contractor	Strongarm Environmental	Total Depth of Borehole ft bgs	2.5
Drill Rig Type	None	Borehole Diameter (inches)	3.25	Approx. Surface Elevation ft msl	---
Approx. Depth Groundwater Encountered	Not Encountered	Sampler Type	Hand Auger	Borehole Backfill	Native Material
Comments					

Feet MSL	Depth, feet	SAMPLES Type	Sample ID	Graphic Log	MATERIAL DESCRIPTION	PID Headspace (ppm)	PID Background (ppm)	Sample Time	REMARKS
	0								
			R-3-1'		Silty SAND with gravel (SM): 10 YR 4/3, dry, hard, no odor or staining	0.0	0.0	0818	
			R-3-2'		SAND with silt (SP): 10 YR 3/3, dry, hard, no odor or staining	0.0	0.0	0821	
					Boring terminated at 2.5' bgs.				
	5								
	10								

URS

Project: Kenneth Hahn East Ridge Line
Project Location: 4100 South La Cienega Blvd., Los Angeles, CA
Project Number: 29403644.10000

Log of Boring R-4

Date(s) Drilled	12/9/11	Logged By	S. Korm	Checked By	A. Bahou
Drilling Method	Hand Auger	Drilling Contractor	Strongarm Environmental	Total Depth of Borehole ft bgs	2.5
Drill Rig Type	None	Borehole Diameter (inches)	3.25	Approx. Surface Elevation ft msl	---
Approx. Depth Groundwater Encountered	Not Encountered	Sampler Type	Hand Auger	Borehole Backfill	Native Material
Comments					

Feet MSL	Depth, feet	SAMPLES Type	Sample ID	Graphic Log	MATERIAL DESCRIPTION	PID Headspace (ppm)	PID Background (ppm)	Sample Time	REMARKS
	0								
			R-4-1'		SAND with silt (SP): Fine to medium grained, 10 YR 6/6, moist, hard, no odor or stain	0.0	0.0	0832	
					Becomes black, no odor				
			R-4-2'		SAND (SP): 10 YR 6/6, moist, loose, no odor or stain	0.0	0.0	0836	
					Boring terminated at 2.5' bgs.				
	5								
	10								

URS

Project: Kenneth Hahn East Ridge Line
Project Location: 4100 South La Cienega Blvd., Los Angeles, CA
Project Number: 29403644.10000

Log of Boring R-5

Date(s) Drilled	12/9/11	Logged By	S. Korm	Checked By	A. Bahou
Drilling Method	Hand Auger	Drilling Contractor	Strongarm Environmental	Total Depth of Borehole ft bgs	3.0
Drill Rig Type	None	Borehole Diameter (inches)	3.25	Approx. Surface Elevation ft msl	---
Approx. Depth Groundwater Encountered	Not Encountered	Sampler Type	Hand Auger	Borehole Backfill	Native Material
Comments					

Feet MSL	Depth, feet	SAMPLES Type	Sample ID	Graphic Log	MATERIAL DESCRIPTION	PID Headspace (ppm)	PID Background (ppm)	Sample Time	REMARKS
	0								
			R-5-1'		Silty SAND (SM): 10 YR 3/2, loose, organic odor, staining	0.0	0.0	0850	
			R-5-2'		Same as above	0.0	0.0	0854	
			R-5-2' DUP			0.0	0.0	0859	
					Boring terminated at 3' bgs.				
	5								
	10								

URS

Project: Kenneth Hahn East Ridge Line
Project Location: 4100 South La Cienega Blvd., Los Angeles, CA
Project Number: 29403644.10000

Log of Boring R-6

Date(s) Drilled	12/9/11	Logged By	S. Korm	Checked By	A. Bahou
Drilling Method	Hand Auger	Drilling Contractor	Strongarm Environmental	Total Depth of Borehole ft bgs	2.5
Drill Rig Type	None	Borehole Diameter (inches)	3.25	Approx. Surface Elevation ft msl	---
Approx. Depth Groundwater Encountered	Not Encountered	Sampler Type	Hand Auger	Borehole Backfill	Native Material
Comments					

Feet MSL	Depth, feet	SAMPLES Type	Sample ID	Graphic Log	MATERIAL DESCRIPTION	PID Headspace (ppm)	PID Background (ppm)	Sample Time	REMARKS
	0								
			R-6-1'		Silty SAND (SM): 10 YR 5/6, moist, loose, no odor or stain	0.0	0.0	0908	
			R-6-2'		SAND (SP): 10 YR 6/6, moist, loose, no odor or stain	0.0	0.0	0911	
					Boring terminated at 2.5' bgs.				
	5								
	10								

URS

Project: Kenneth Hahn East Ridge Line
Project Location: 4100 South La Cienega Blvd., Los Angeles, CA
Project Number: 29403644.10000

Log of Boring R-7

Date(s) Drilled	12/9/11	Logged By	S. Korm	Checked By	A. Bahou
Drilling Method	Hand Auger	Drilling Contractor	Strongarm Environmental	Total Depth of Borehole ft bgs	2.5
Drill Rig Type	None	Borehole Diameter (inches)	3.25	Approx. Surface Elevation ft msl	---
Approx. Depth Groundwater Encountered	Not Encountered	Sampler Type	Hand Auger	Borehole Backfill	Native Material
Comments					

Feet MSL	Depth, feet	SAMPLES Type	SAMPLES Sample ID	Graphic Log	MATERIAL DESCRIPTION	PID Headspace (ppm)	PID Background (ppm)	Sample Time	REMARKS
	0								
			R-7-1'		Silty SAND (SM): 10 YR 4/3, loose, moist, no odor or stain	0.0	0.0	0923	
			R-7-2'		Same as above, 10 YR 5/2	0.0	0.0	0929	
					Boring terminated at 2.5' bgs.				
	5								
	10								

URS

Project: Kenneth Hahn East Ridge Line
Project Location: 4100 South La Cienega Blvd., Los Angeles, CA
Project Number: 29403644.10000

Log of Boring R-8

Date(s) Drilled	12/9/11	Logged By	S. Korm	Checked By	A. Bahou
Drilling Method	Hand Auger	Drilling Contractor	Strongarm Environmental	Total Depth of Borehole ft bgs	2.5
Drill Rig Type	None	Borehole Diameter (inches)	3.25	Approx. Surface Elevation ft msl	---
Approx. Depth Groundwater Encountered	Not Encountered	Sampler Type	Hand Auger	Borehole Backfill	Native Material
Comments					

Feet MSL	Depth, feet	SAMPLES Type	Sample ID	Graphic Log	MATERIAL DESCRIPTION	PID Headspace (ppm)	PID Background (ppm)	Sample Time	REMARKS
	0								
			R-8-1'		Silty SAND (SM): 10 YR 4/4, hard, no staining or odor	0.0	0.0	0943	
			R-8-2'		CLAY with silt (CL): 10 YR 3/2, hard, no staining or odor	0.0	0.0	0947	
					Boring terminated at 2.5' bgs.				
	5								
	10								

URS

Project: Kenneth Hahn East Ridge Line
Project Location: 4100 South La Cienega Blvd., Los Angeles, CA
Project Number: 29403644.10000

Log of Boring R-9

Date(s) Drilled	12/9/11	Logged By	S. Korm	Checked By	A. Bahou
Drilling Method	Hand Auger	Drilling Contractor	Strongarm Environmental	Total Depth of Borehole ft bgs	3.0
Drill Rig Type	None	Borehole Diameter (inches)	3.25	Approx. Surface Elevation ft msl	---
Approx. Depth Groundwater Encountered	Not Encountered	Sampler Type	Hand Auger	Borehole Backfill	Native Material
Comments					

Feet MSL	Depth, feet	SAMPLES Type	Sample ID	Graphic Log	MATERIAL DESCRIPTION	PID Headspace (ppm)	PID Background (ppm)	Sample Time	REMARKS
	0								
			R-9-1'		Silty SAND (SM): 10 YR 4/2, hard, moist, no odor or stain	0.0	0.0	1003	
			R-9-2'		Sandy SILT (ML): 10 YR 2/2, hard, odor and stain	6.0	0.0	1005	
					Boring terminated at 3' bgs.				
	5								
	10								

URS

Project: Kenneth Hahn East Ridge Line
Project Location: 4100 South La Cienega Blvd., Los Angeles, CA
Project Number: 29403644.10000

Log of Boring R-10

Date(s) Drilled	12/9/11	Logged By	S. Korm	Checked By	A. Bahou
Drilling Method	Hand Auger	Drilling Contractor	Strongarm Environmental	Total Depth of Borehole ft bgs	2.5
Drill Rig Type	None	Borehole Diameter (inches)	3.25	Approx. Surface Elevation ft msl	---
Approx. Depth Groundwater Encountered	Not Encountered	Sampler Type	Hand Auger	Borehole Backfill	Native Material
Comments					

Feet MSL	Depth, feet	SAMPLES Type	SAMPLES Sample ID	Graphic Log	MATERIAL DESCRIPTION	PID Headspace (ppm)	PID Background (ppm)	Sample Time	REMARKS
	0								
			R-10-1'		Silty SAND (SM): fine to medium grained sand, 10 YR 3/3, dry, loose, no odor or staining	0.0	0.0	1021	
			R-10-2'		Same as above	0.0	0.0	1025	
					Boring terminated at 2.5' bgs.				
	5								
	10								

URS

Project: Kenneth Hahn East Ridge Line
Project Location: 4100 South La Cienega Blvd., Los Angeles, CA
Project Number: 29403644.10000

Log of Boring R-11

Date(s) Drilled	12/9/11	Logged By	S. Korm	Checked By	A. Bahou
Drilling Method	Hand Auger	Drilling Contractor	Strongarm Environmental	Total Depth of Borehole ft bgs	3.0
Drill Rig Type	None	Borehole Diameter (inches)	3.25	Approx. Surface Elevation ft msl	---
Approx. Depth Groundwater Encountered	Not Encountered	Sampler Type	Hand Auger	Borehole Backfill	Native Material
Comments					

Feet MSL	Depth, feet	SAMPLES Type	SAMPLES Sample ID	Graphic Log	MATERIAL DESCRIPTION	PID Headspace (ppm)	PID Background (ppm)	Sample Time	REMARKS
	0								
			R-11-1'		Sandy SILT (ML): 10 YR 2/2, hard, dry, no odor or staining	0.0	0.0	1037	
			R-11-2'		Sandy SILT (ML): 10 YR 2/1. soft, dry, black stain, strong odor	4.5	0.0	1040	
					Boring terminated at 3' bgs.				
	5								
	10								

URS

Project: Kenneth Hahn East Ridge Line
Project Location: 4100 South La Cienega Blvd., Los Angeles, CA
Project Number: 29403644.10000

Log of Boring R-12

Date(s) Drilled	12/9/11	Logged By	S. Korm	Checked By	A. Bahou
Drilling Method	Hand Auger	Drilling Contractor	Strongarm Environmental	Total Depth of Borehole ft bgs	3.5
Drill Rig Type	None	Borehole Diameter (inches)	3.25	Approx. Surface Elevation ft msl	---
Approx. Depth Groundwater Encountered	Not Encountered	Sampler Type	Hand Auger	Borehole Backfill	Native Material
Comments					

Feet MSL	Depth, feet	SAMPLES Type	Sample ID	Graphic Log	MATERIAL DESCRIPTION	PID Headspace (ppm)	PID Background (ppm)	Sample Time	REMARKS
	0								
			R-12-1'		Silty SAND (SM): Fine grained, dark brown (10 YR 3/3), loose, dry, no odor or stain	0.0		1059	
			R-12-2'		Sandy SILT (ML): Black (10 YR 2/1), dry, hard, strong odor, black stain	6.0	0.0	1103	
			R-12-2' DUP		Same as above	6.0	0.0	1108	
					Boring terminated at 3.5' bgs.				
	5								
	10								

URS

Project: Kenneth Hahn East Ridge Line **Project Location:** 4100 South La Cienega Blvd., Los Angeles, CA **Project Number:** 29403644.10000	**Log of Boring R-13** Sheet 1 of 1

Date(s) Drilled	**12/9/11**	Logged By	**S. Korm**	Checked By	**A. Bahou**
Drilling Method	**Hand Auger**	Drilling Contractor	**Strongarm Environmental**	Total Depth of Borehole ft bgs	**2.5**
Drill Rig Type	**None**	Borehole Diameter (inches)	**3.25**	Approx. Surface Elevation ft msl	**---**
Approx. Depth Groundwater Encountered	**Not Encountered**	Sampler Type	**Hand Auger**	Borehole Backfill	**Native Material**
Comments					

Feet MSL	Depth, feet	SAMPLES Type	SAMPLES Sample ID	Graphic Log	MATERIAL DESCRIPTION	PID Headspace (ppm)	PID Background (ppm)	Sample Time	REMARKS
	0								
			R-13-1'		Silty SAND (SM): Fine grained, dark brown (10 YR 3/3), moist, loose, no odor or stain	0.0	0.0	1116	
			R-13-2'		Same as above	0.0	0.0	1122	
					Boring terminated at 2.5' bgs.				
	5								
	10								

URS

Project: Kenneth Hahn East Ridge Line
Project Location: 4100 South La Cienega Blvd., Los Angeles, CA
Project Number: 29403644.10000

Log of Boring R-14

Date(s) Drilled	12/9/11	Logged By	S. Korm	Checked By	A. Bahou
Drilling Method	Hand Auger	Drilling Contractor	Strongarm Environmental	Total Depth of Borehole ft bgs	2.5
Drill Rig Type	None	Borehole Diameter (inches)	3.25	Approx. Surface Elevation ft msl	---
Approx. Depth Groundwater Encountered	Not Encountered	Sampler Type	Hand Auger	Borehole Backfill	Native Material
Comments					

Feet MSL	Depth, feet	SAMPLES Type	SAMPLES Sample ID	Graphic Log	MATERIAL DESCRIPTION	PID Headspace (ppm)	PID Background (ppm)	Sample Time	REMARKS
	0								
		■	R-14-1'		Silty SAND (SM): Fine grained, 10 YR 3/2, loose, no odor or stain	0.0	0.0	1137	
		■	R-14-2'		CLAY with silt (CL): 10 YR 4/2, no odor or stain	0.0	0.0	1140	
					Boring terminated at 2.5' bgs.				
	5								
	10								

URS

Project: Kenneth Hahn East Ridge Line
Project Location: 4100 South La Cienega Blvd., Los Angeles, CA
Project Number: 29403644.10000

Log of Boring R-15

Date(s) Drilled	12/9/11	Logged By	S. Korm	Checked By	A. Bahou
Drilling Method	Hand Auger	Drilling Contractor	Strongarm Environmental	Total Depth of Borehole ft bgs	3.0
Drill Rig Type	None	Borehole Diameter (inches)	3.25	Approx. Surface Elevation ft msl	---
Approx. Depth Groundwater Encountered	Not Encountered	Sampler Type	Hand Auger	Borehole Backfill	Native Material
Comments					

Feet MSL	Depth, feet	SAMPLES Type	SAMPLES Sample ID	Graphic Log	MATERIAL DESCRIPTION	PID Headspace (ppm)	PID Background (ppm)	Sample Time	REMARKS
	0								
			R-15-1'		Silty SAND (SM): Fine grained, 10 YR 4/4, loose, dry, no stain or odor	0.0	0.0	1148	
			R-15-2'		Silty CLAY (CL): 10 YR 4/4, hard, dry, staining, no odor	0.0	0.0	1152	
					Boring terminated at 3' bgs.				
	5								
	10								

URS

APPENDIX B

TABLE B-1
SOIL ANALYTICAL RESULTS CARBON CHAIN COMPOUNDS
Kenneth Hahn State Park Eastern Ridgeline Study
Baldwin Hills, California

Site ID	Sample ID	Sample Date	Sample Depth	Diesel Range Organics mg/kg	Oil Range Organics mg/kg
L-01	L-1-1'	12/09/2011	1.0	ND (<5)	42
L-01	L-1-1'(DUP)	12/09/2011	1.0	ND (<5)	36
L-02	L-2-1'	12/09/2011	1.0	ND (<5)	16
L-03	L-3-1'	12/09/2011	1.0	ND (<5)	65
R-01	R-1-1'	12/09/2011	1.0	ND (<5)	ND (<10)
R-01	R-1-2'	12/09/2011	2.0	ND (<5)	ND (<10)
R-02	R-2-1'	12/09/2011	1.0	ND (<5)	ND (<10)
R-02	R-2-2'	12/09/2011	2.0	ND (<5)	ND (<10)
R-02	R-2-2' (DUP)	12/09/2011	2.0	ND (<5)	ND (<10)
R-03	R-3-1'	12/09/2011	1.0	ND (<50)	420
R-03	R-3-2'	12/09/2011	2.0	ND (<5)	33
R-04	R-4-1'	12/09/2011	1.0	ND (<5)	ND (<10)
R-04	R-4-2'	12/09/2011	2.0	ND (<5)	ND (<10)
R-05	R-5-1'	12/09/2011	1.0	ND (<50)	150
R-05	R-5-2'	12/09/2011	2.0	ND (<5)	ND (<10)
R-06	R-6-1'	12/09/2011	1.0	ND (<5)	47
R-06	R-6-2'	12/09/2011	2.0	ND (<5)	ND (<10)
R-07	R-7-1'	12/09/2011	1.0	ND (<50)	250
R-07	R-7-2'	12/09/2011	2.0	ND (<5)	ND (<10)
R-08	R-8-1'	12/09/2011	1.0	ND (<5)	11
R-08	R-8-2'	12/09/2011	2.0	ND (<5)	22
R-09	R-9-1'	12/09/2011	1.0	ND (<5)	ND (<10)
R-09	R-9-2'	12/09/2011	2.0	27000	25000
R-10	R-10-1'	12/09/2011	1.0	2900	4200
R-10	R-10-2'	12/09/2011	2.0	24000	29000
R-11	R-11-1'	12/09/2011	1.0	10000	13000
R-11	R-11-2'	12/09/2011	2.0	4700	4700
R-12	R-12-1'	12/09/2011	1.0	ND (<10)	80
R-12	R-12-2'	12/09/2011	2.0	21000	16000
R-12	R-12-2' (DUP)	12/09/2011	2.0	24000	20000
R-13	R-13-1'	12/09/2011	1.0	ND (<5)	ND (<10)
R-13	R-13-2'	12/09/2011	2.0	80	410
R-14	R-14-1'	12/09/2011	1.0	ND (<5)	15
R-14	R-14-2'	12/09/2011	2.0	ND (<5)	ND (<10)
R-15	R-15-1'	12/09/2011	1.0	ND (<5)	26
R-15	R-15-2'	12/09/2011	2.0	4100	4400
S-01	S-1-3.5'	12/09/2011	3.5	ND (<5)	12
S-02	S-2-2'	12/09/2011	2.0	ND (<5)	ND (<10)
S-03	S-3-2'	12/09/2011	2.0	ND (<5)	52

Notes:
1. mg/kg = milligrams per kilogram
2. ND = non detect

TABLE B-2
SOIL ANALYTICAL RESULTS SEMI-VOLATILE ORGANIC COMPOUNDS
Kenneth Hahn State Park Eastern Ridgeline Study
Baldwin Hills, California

	Site ID:	R-09	R-10	R-11	R-11	R-12	S-01	S-02	S-03
	Sample ID:	R-9-2'	R-10-2'	R-11-1'	R-11-2'	R-12-2'	S-1-3.5'	S-2-2'	S-3-2'
	Sample Date:	12/09/2011	12/09/2011	12/09/2011	12/09/2011	12/09/2011	12/09/2011	12/09/2011	12/09/2011
	Sample Depth:	2.0	2.0	1.0	2.0	2.0	3.5	2.0	2.0
ANALYTE	Units	CONC	CONC	CONC	CONC	CONC	CONC	CONC	CONC
Acenaphthene	ug/kg	ND (<500)	ND (<667)	ND (<500)	ND (<500)	ND (<600)	ND (<200)	ND (<200)	ND (<200)
Acenaphthylene	ug/kg	990	ND (<667)	ND (<500)	ND (<500)	ND (<600)	ND (<200)	ND (<200)	ND (<200)
Aniline	ug/kg	ND (<500)	ND (<667)	ND (<500)	ND (<500)	ND (<600)	ND (<200)	ND (<200)	ND (<200)
Anthracene	ug/kg	ND (<500)	ND (<667)	ND (<500)	ND (<500)	ND (<600)	ND (<200)	ND (<200)	ND (<200)
Benzidine	ug/kg	ND (<500)	ND (<667)	ND (<500)	ND (<500)	ND (<600)	ND (<200)	ND (<200)	ND (<200)
Benzo(a)anthracene	ug/kg	ND (<500)	ND (<667)	ND (<500)	ND (<500)	ND (<600)	ND (<200)	ND (<200)	ND (<200)
Benzo(a)pyrene	ug/kg	ND (<500)	ND (<667)	ND (<500)	ND (<500)	ND (<600)	ND (<200)	ND (<200)	ND (<200)
Benzo(b)fluoranthene	ug/kg	ND (<500)	ND (<667)	ND (<500)	ND (<500)	ND (<600)	ND (<200)	ND (<200)	ND (<200)
Benzo(g,h,i)perylene	ug/kg	ND (<500)	ND (<667)	ND (<500)	ND (<500)	ND (<600)	ND (<200)	ND (<200)	ND (<200)
Benzo(k)fluoranthene	ug/kg	ND (<500)	ND (<667)	ND (<500)	ND (<500)	ND (<600)	ND (<200)	ND (<200)	ND (<200)
Benzyl alcohol	ug/kg	ND (<1000)	ND (<1320)	ND (<1000)	ND (<1000)	ND (<1200)	ND (<400)	ND (<400)	ND (<400)
Bis(2-chlorisopropyl)ether	ug/kg	ND (<500)	ND (<667)	ND (<500)	ND (<500)	ND (<600)	ND (<200)	ND (<200)	ND (<200)
Bis(2-chloroethoxy)methane	ug/kg	ND (<500)	ND (<667)	ND (<500)	ND (<500)	ND (<600)	ND (<200)	ND (<200)	ND (<200)
Bis(2-chloroethyl)ether	ug/kg	ND (<500)	ND (<667)	ND (<500)	ND (<500)	ND (<600)	ND (<200)	ND (<200)	ND (<200)
Bis(2-ethylhexyl)phthalate	ug/kg	ND (<500)	ND (<667)	ND (<500)	ND (<500)	ND (<600)	ND (<200)	ND (<200)	ND (<200)
4-Bromophenyl phenyl ether	ug/kg	ND (<500)	ND (<667)	ND (<500)	ND (<500)	ND (<600)	ND (<200)	ND (<200)	ND (<200)
Butylbenzylphthalate	ug/kg	ND (<500)	ND (<667)	ND (<500)	ND (<500)	ND (<600)	ND (<200)	ND (<200)	ND (<200)
Carbazole	ug/kg	ND (<500)	ND (<667)	ND (<500)	ND (<500)	ND (<600)	ND (<200)	ND (<200)	ND (<200)
4-Chloro-3-methylphenol	ug/kg	ND (<500)	ND (<667)	ND (<500)	ND (<500)	ND (<600)	ND (<200)	ND (<200)	ND (<200)
4-Chloroaniline	ug/kg	ND (<500)	ND (<667)	ND (<500)	ND (<500)	ND (<600)	ND (<200)	ND (<200)	ND (<200)
2-Chloronaphthalene	ug/kg	ND (<500)	ND (<667)	ND (<500)	ND (<500)	ND (<600)	ND (<200)	ND (<200)	ND (<200)
2-Chlorophenol	ug/kg	ND (<500)	ND (<667)	ND (<500)	ND (<500)	ND (<600)	ND (<200)	ND (<200)	ND (<200)
4-Chlorophenyl phenyl ether	ug/kg	ND (<500)	ND (<667)	ND (<500)	ND (<500)	ND (<600)	ND (<200)	ND (<200)	ND (<200)
Chrysene	ug/kg	5100	ND (<667)	ND (<500)	ND (<500)	ND (<600)	ND (<200)	ND (<200)	ND (<200)
Di-n-butylphthalate	ug/kg	ND (<500)	ND (<667)	ND (<500)	ND (<500)	ND (<600)	ND (<200)	ND (<200)	ND (<200)
Di-n-octylphthalate	ug/kg	ND (<500)	ND (<667)	ND (<500)	ND (<500)	ND (<600)	ND (<200)	ND (<200)	ND (<200)
Dibenzo(a,h)anthracene	ug/kg	ND (<500)	ND (<667)	ND (<500)	ND (<500)	ND (<600)	ND (<200)	ND (<200)	ND (<200)
Dibenzofuran	ug/kg	ND (<500)	ND (<667)	ND (<500)	ND (<500)	ND (<600)	ND (<200)	ND (<200)	ND (<200)
1,2-Dichlorobenzene	ug/kg	ND (<500)	ND (<667)	ND (<500)	ND (<500)	ND (<600)	ND (<200)	ND (<200)	ND (<200)
1,3-Dichlorobenzene	ug/kg	ND (<500)	ND (<667)	ND (<500)	ND (<500)	ND (<600)	ND (<200)	ND (<200)	ND (<200)
1,4-Dichlorobenzene	ug/kg	ND (<500)	ND (<667)	ND (<500)	ND (<500)	ND (<600)	ND (<200)	ND (<200)	ND (<200)
3,3'-Dichlorobenzidine	ug/kg	ND (<500)	ND (<667)	ND (<500)	ND (<500)	ND (<600)	ND (<200)	ND (<200)	ND (<200)
2,4-Dichlorophenol	ug/kg	ND (<500)	ND (<667)	ND (<500)	ND (<500)	ND (<600)	ND (<200)	ND (<200)	ND (<200)
Diethylphthalate	ug/kg	ND (<500)	ND (<667)	ND (<500)	ND (<500)	ND (<600)	ND (<200)	ND (<200)	ND (<200)
2,4-Dimethylphenol	ug/kg	ND (<500)	ND (<667)	ND (<500)	ND (<500)	ND (<600)	ND (<200)	ND (<200)	ND (<200)
Dimethylphthalate	ug/kg	ND (<500)	ND (<667)	ND (<500)	ND (<500)	ND (<600)	ND (<200)	ND (<200)	ND (<200)
2,4-Dinitrophenol	ug/kg	ND (<500)	ND (<667)	ND (<500)	ND (<500)	ND (<600)	ND (<200)	ND (<200)	ND (<200)
2,4-Dinitrotoluene	ug/kg	ND (<500)	ND (<667)	ND (<500)	ND (<500)	ND (<600)	ND (<200)	ND (<200)	ND (<200)
2,6-Dinitrotoluene	ug/kg	ND (<500)	ND (<667)	ND (<500)	ND (<500)	ND (<600)	ND (<200)	ND (<200)	ND (<200)
Fluoranthene	ug/kg	ND (<500)	ND (<667)	ND (<500)	ND (<500)	ND (<600)	ND (<200)	ND (<200)	ND (<200)
Fluorene	ug/kg	2900	ND (<667)	ND (<500)	570	ND (<600)	ND (<200)	ND (<200)	ND (<200)
Hexachlorobenzene	ug/kg	ND (<500)	ND (<667)	ND (<500)	ND (<500)	ND (<600)	ND (<200)	ND (<200)	ND (<200)
Hexachlorobutadiene	ug/kg	ND (<500)	ND (<667)	ND (<500)	ND (<500)	ND (<600)	ND (<200)	ND (<200)	ND (<200)
Hexachlorocyclopentadiene	ug/kg	ND (<500)	ND (<667)	ND (<500)	ND (<500)	ND (<600)	ND (<200)	ND (<200)	ND (<200)
Hexachloroethane	ug/kg	ND (<500)	ND (<667)	ND (<500)	ND (<500)	ND (<600)	ND (<200)	ND (<200)	ND (<200)
Indeno(1,2,3-c,d)pyrene	ug/kg	ND (<500)	ND (<667)	ND (<500)	ND (<500)	ND (<600)	ND (<200)	ND (<200)	ND (<200)
Isophorone	ug/kg	ND (<500)	ND (<667)	ND (<500)	ND (<500)	ND (<600)	ND (<200)	ND (<200)	ND (<200)
2-Methylnaphthalene	ug/kg	5200	ND (<667)	ND (<500)	1720	ND (<600)	ND (<200)	ND (<200)	ND (<200)
2-Methylphenol	ug/kg	ND (<500)	ND (<667)	ND (<500)	ND (<500)	ND (<600)	ND (<200)	ND (<200)	ND (<200)
4-Methylphenol	ug/kg	ND (<500)	ND (<667)	ND (<500)	ND (<500)	ND (<600)	ND (<200)	ND (<200)	ND (<200)
Naphthalene	ug/kg	1900	ND (<667)	ND (<500)	700	ND (<600)	ND (<200)	ND (<200)	ND (<200)
2-Nitroaniline	ug/kg	ND (<500)	ND (<667)	ND (<500)	ND (<500)	ND (<600)	ND (<200)	ND (<200)	ND (<200)
3-Nitroaniline	ug/kg	ND (<500)	ND (<667)	ND (<500)	ND (<500)	ND (<600)	ND (<200)	ND (<200)	ND (<200)

TABLE B-2
SOIL ANALYTICAL RESULTS SEMI-VOLATILE ORGANIC COMPOUNDS
Kenneth Hahn State Park Eastern Ridgeline Study
Baldwin Hills, California

	Site ID:	R-09	R-10	R-11	R-11	R-12	S-01	S-02	S-03
	Sample ID:	R-9-2'	R-10-2'	R-11-1'	R-11-2'	R-12-2'	S-1-3.5'	S-2-2'	S-3-2'
	Sample Date:	12/09/2011	12/09/2011	12/09/2011	12/09/2011	12/09/2011	12/09/2011	12/09/2011	12/09/2011
	Sample Depth:	2.0	2.0	1.0	2.0	2.0	3.5	2.0	2.0
ANALYTE	Units	CONC	CONC	CONC	CONC	CONC	CONC	CONC	CONC
4-Nitroaniline	ug/kg	ND (<500)	ND (<667)	ND (<500)	ND (<500)	ND (<600)	ND (<200)	ND (<200)	ND (<200)
Nitrobenzene	ug/kg	ND (<500)	ND (<667)	ND (<500)	ND (<500)	ND (<600)	ND (<200)	ND (<200)	ND (<200)
2-Nitrophenol	ug/kg	ND (<500)	ND (<667)	ND (<500)	ND (<500)	ND (<600)	ND (<200)	ND (<200)	ND (<200)
4-Nitrophenol	ug/kg	ND (<500)	ND (<667)	ND (<500)	ND (<500)	ND (<600)	ND (<200)	ND (<200)	ND (<200)
N-Nitrosodimethylamine	ug/kg	ND (<500)	ND (<667)	ND (<500)	ND (<500)	ND (<600)	ND (<200)	ND (<200)	ND (<200)
N-Nitrosodiphenylamine	ug/kg	ND (<500)	ND (<667)	ND (<500)	ND (<500)	ND (<600)	ND (<200)	ND (<200)	ND (<200)
N-Nitrosodipropylamine	ug/kg	ND (<500)	ND (<667)	ND (<500)	ND (<500)	ND (<600)	ND (<200)	ND (<200)	ND (<200)
Pentachlorophenol	ug/kg	ND (<2500)	ND (<3300)	ND (<2500)	ND (<2500)	ND (<3000)	ND (<1000)	ND (<1000)	ND (<1000)
Phenanthrene	ug/kg	9600	ND (<667)	ND (<500)	ND (<500)	ND (<600)	ND (<200)	ND (<200)	ND (<200)
Phenol	ug/kg	ND (<500)	ND (<667)	ND (<500)	ND (<500)	ND (<600)	ND (<200)	ND (<200)	ND (<200)
Pyrene	ug/kg	ND (<500)	ND (<667)	ND (<500)	ND (<500)	ND (<600)	ND (<200)	ND (<200)	ND (<200)
Pyridine	ug/kg	ND (<500)	ND (<667)	ND (<500)	ND (<500)	ND (<600)	ND (<200)	ND (<200)	ND (<200)
1,2,4-Trichlorobenzene	ug/kg	ND (<500)	ND (<667)	ND (<500)	ND (<500)	ND (<600)	ND (<200)	ND (<200)	ND (<200)
2,4,5-Trichlorophenol	ug/kg	ND (<500)	ND (<667)	ND (<500)	ND (<500)	ND (<600)	ND (<200)	ND (<200)	ND (<200)
2,4,6-Trichlorophenol	ug/kg	ND (<500)	ND (<667)	ND (<500)	ND (<500)	ND (<600)	ND (<200)	ND (<200)	ND (<200)

Notes:
1. ug/kg = micrograms per kilogram
2. ND = non detect

TABLE B-3
SOIL ANALYTICAL RESULTS METALS
Kenneth Hahn State Park Eastern Ridgeline Study
Baldwin Hills, California

	Site ID:	L-01	L-01	L-02	L-03	R-01	R-01	R-02	R-02	R-02	R-03	R-03	R-04	R-04
	Sample ID:	L-1-1'	L-1-1'(DUP)	L-2-1'	L-3-1'	R-1-1'	R-1-2'	R-2-1'	R-2-2'	R-2-2' (DUP)	R-3-1'	R-3-2'	R-4-1'	R-4-2'
	Sample Date:	12/09/2011	12/09/2011	12/09/2011	12/09/2011	12/09/2011	12/09/2011	12/09/2011	12/09/2011	12/09/2011	12/09/2011	12/09/2011	12/09/2011	12/09/2011
	Sample Depth:	1.0	1.0	1.0	1.0	1.0	2.0	1.0	2.0	2.0	1.0	2.0	1.0	2.0
ANALYTE	Units	CONC	CONC	CONC	CONC	CONC	CONC	CONC	CONC	CONC	CONC	CONC	CONC	CONC
Antimony	mg/kg			ND (<0.50)										
Arsenic	mg/kg	ND (<0.50)	ND (<0.50)	ND (<0.50)	ND (<0.50)	ND (<0.50)	ND (<0.50)	ND (<0.50)	ND (<0.50)	ND (<0.50)	ND (<0.50)	ND (<0.50)	ND (<0.50)	ND (<0.50)
Barium	mg/kg			14.9										
Beryllium	mg/kg			ND (<0.50)										
Cadmium	mg/kg			ND (<0.50)										
Chromium	mg/kg			1.7										
Cobalt	mg/kg			ND (<0.50)										
Copper	mg/kg			0.81										
Lead	mg/kg	ND (<0.50)	ND (<0.50)	ND (<0.50)	0.91	ND (<0.50)	ND (<0.50)	ND (<0.50)	ND (<0.50)	ND (<0.50)	ND (<0.50)	ND (<0.50)	ND (<0.50)	ND (<0.50)
Mercury	mg/kg			0.060										
Molybdenum	mg/kg			ND (<0.50)										
Nickel	mg/kg			0.62										
Selenium	mg/kg			ND (<0.50)										
Silver	mg/kg			ND (<0.50)										
Thallium	mg/kg			ND (<1.0)										
Vanadium	mg/kg			ND (<1.0)										
Zinc	mg/kg			3.4										

Notes:
1. mg/kg = milligrams per kilogram
2. ND = non detect

TABLE B-3
SOIL ANALYTICAL RESULTS METALS
Kenneth Hahn State Park Eastern Ridgeline Study
Baldwin Hills, California

	Site ID:	R-05	R-05	R-06	R-06	R-07	R-07	R-08	R-08	R-09	R-09	R-10	R-10	R-11
	Sample ID:	R-5-1'	R-5-2'	R-6-1'	R-6-2'	R-7-1'	R-7-2'	R-8-1'	R-8-2'	R-9-1'	R-9-2'	R-10-1'	R-10-2'	R-11-1'
	Sample Date:	12/09/2011	12/09/2011	12/09/2011	12/09/2011	12/09/2011	12/09/2011	12/09/2011	12/09/2011	12/09/2011	12/09/2011	12/09/2011	12/09/2011	12/09/2011
	Sample Depth:	1.0	2.0	1.0	2.0	1.0	2.0	1.0	2.0	1.0	2.0	1.0	2.0	1.0
ANALYTE	Units	CONC	CONC	CONC	CONC	CONC	CONC	CONC	CONC	CONC	CONC	CONC	CONC	CONC
Antimony	mg/kg										ND (<0.50)		ND (<0.50)	ND (<0.50)
Arsenic	mg/kg	ND (<0.50)	ND (<0.50)	ND (<0.50)	ND (<0.50)	ND (<0.50)	ND (<0.50)	ND (<0.50)	ND (<0.50)	ND (<0.50)	7.9	ND (<0.50)	5.1	4.1
Barium	mg/kg										96.2		35.6	63.9
Beryllium	mg/kg										ND (<0.50)		ND (<0.50)	ND (<0.50)
Cadmium	mg/kg										ND (<0.50)		ND (<0.50)	ND (<0.50)
Chromium	mg/kg										30.8		16.6	16.6
Cobalt	mg/kg										1.6		1.0	1.1
Copper	mg/kg										7.7		4.2	4.1
Lead	mg/kg	0.62	ND (<0.50)	ND (<0.50)	ND (<0.50)	0.93	ND (<0.50)	ND (<0.50)	ND (<0.50)	ND (<0.50)	6.3	1.1	3.1	4.5
Mercury	mg/kg										0.23		0.26	0.23
Molybdenum	mg/kg										ND (<0.50)		ND (<0.50)	ND (<0.50)
Nickel	mg/kg										6.1		3.2	3.2
Selenium	mg/kg										ND (<0.50)		ND (<0.50)	ND (<0.50)
Silver	mg/kg										ND (<0.50)		ND (<0.50)	ND (<0.50)
Thallium	mg/kg										ND (<1.0)		ND (<1.0)	ND (<1.0)
Vanadium	mg/kg										ND (<1.0)		ND (<1.0)	ND (<1.0)
Zinc	mg/kg										9.6		7.2	10

Notes:
1. mg/kg = milligrams per kilogra
2. ND = non detect

TABLE B-3
SOIL ANALYTICAL RESULTS METALS
Kenneth Hahn State Park Eastern Ridgeline Study
Baldwin Hills, California

	Site ID:	R-11	R-12	R-12	R-12	R-13	R-13	R-14	R-14	R-15	R-15	S-01	S-02	S-03
	Sample ID:	R-11-2'	R-12-1'	R-12-2'	R-12-2' (DUP)	R-13-1'	R-13-2'	R-14-1'	R-14-2'	R-15-1'	R-15-2'	S-1-3.5'	S-2-2'	S-3-2'
	Sample Date:	12/09/2011	12/09/2011	12/09/2011	12/09/2011	12/09/2011	12/09/2011	12/09/2011	12/09/2011	12/09/2011	12/09/2011	12/09/2011	12/09/2011	12/09/2011
	Sample Depth:	2.0	1.0	2.0	2.0	1.0	2.0	1.0	2.0	1.0	2.0	3.5	2.0	2.0
ANALYTE	Units	CONC	CONC	CONC	CONC	CONC	CONC	CONC	CONC	CONC	CONC	CONC	CONC	CONC
Antimony	mg/kg	ND (<0.50)		ND (<0.50)		ND (<0.50)			ND (<0.50)		ND (<0.50)	ND (<0.50)	ND (<0.50)	ND (<0.50)
Arsenic	mg/kg	2.1	ND (<0.50)	ND (<0.50)	ND (<0.50)	ND (<0.50)	ND (<0.50)	ND (<0.50)	ND (<0.50)	ND (<0.50)	ND (<0.50)	ND (<0.50)	ND (<0.50)	ND (<0.50)
Barium	mg/kg	165		36		43.6			27.3		84.3	85.6	45.9	48.7
Beryllium	mg/kg	ND (<0.50)		ND (<0.50)		ND (<0.50)			ND (<0.50)		ND (<0.50)	ND (<0.50)	ND (<0.50)	ND (<0.50)
Cadmium	mg/kg	ND (<0.50)		ND (<0.50)		ND (<0.50)			ND (<0.50)		ND (<0.50)	ND (<0.50)	ND (<0.50)	ND (<0.50)
Chromium	mg/kg	6.9		6.7		2.2			1.4		6.8	3.3	3.5	2.5
Cobalt	mg/kg	1.3		ND (<0.50)		1.1			ND (<0.50)		0.7	1.5	1.3	1.4
Copper	mg/kg	4.0		2.2		2.3			ND (<0.50)		2.6	3.2	2.8	2.4
Lead	mg/kg	2.9	1.7	2.2	1.5	2.3	2.1	ND (<0.50)	5.9	ND (<0.50)	2.1	1.8	0.95	1.0
Mercury	mg/kg	0.17		0.29		0.26			0.17		0.35	0.14	0.23	0.21
Molybdenum	mg/kg	ND (<0.50)		ND (<0.50)		ND (<0.50)			ND (<0.50)		ND (<0.50)	ND (<0.50)	ND (<0.50)	ND (<0.50)
Nickel	mg/kg	3.2		1.5		1.5			ND (<0.50)		1.7	2.1	2.2	1.6
Selenium	mg/kg	ND (<0.50)		ND (<0.50)		ND (<0.50)			ND (<0.50)		ND (<0.50)	ND (<0.50)	ND (<0.50)	ND (<0.50)
Silver	mg/kg	ND (<0.50)		ND (<0.50)		ND (<0.50)			ND (<0.50)		ND (<0.50)	ND (<0.50)	ND (<0.50)	ND (<0.50)
Thallium	mg/kg	ND (<1.0)		ND (<1.0)		ND (<1.0)			ND (<1.0)		ND (<1.0)	ND (<1.0)	ND (<1.0)	ND (<1.0)
Vanadium	mg/kg	ND (<1.0)		ND (<1.0)		ND (<1.0)			ND (<1.0)		ND (<1.0)	ND (<1.0)	ND (<1.0)	ND (<1.0)
Zinc	mg/kg	5.3		5.2		3.5			ND (<3.0)		12.7	4.8	4.4	3.8

Notes:
1. mg/kg = milligrams per kilogra
2. ND = non detect

APPENDIX C

CHEMTEK ENVIRONMENTAL LABORATORIES INC.

"An environment-friendly company"

13554 Larwin Circle, Santa Fe Springs, CA 90670

Tel. (562) 926-9848 FAX (562) 926-8324

CA Dept of Health Accredited. (ELAP No. 1435)

CERTIFICATE OF ANALYSIS

Job No. 112041 Date: 12-23-11

This is the Certificate of Analysis for the following samples:

Client	: URS
Contact person	: Alexis Bahou
Project #	: 29403644
Project Site	: Ken Hahn E. Ridgeline 4100 S. La Cienega Blvd.
Date of sample	: 12-09-11
Date received	: 12-09-11
Number of samples	: 41
Sample matrix	: soil,water

Samples were labeled as follows

SAMPLE IDENTIFICATION	DATE SAMPLED	LABORATORY NUMBER
R-1-1′	12/09/11	112041-01A
R-1-2′	12/09/11	112041-02A
R-2-1′	12/09/11	112041-03A
R-2-2′	12/09/11	112041-04A
R-2-2′(dup)	12/09/11	112041-05A
R-3-1′	12/09/11	112041-06A
R-3-2′	12/09/11	112041-07A
R-4-1′	12/09/11	112041-08A
R-4-2′	12/09/11	112041-09A
R-5-1′	12/09/11	112041-10A
R-5-2′	12/09/11	112041-11A
R-5-2′(dup)	12/09/11	112041-12A
R-6-1′	12/09/11	112041-13A
R-6-2′	12/09/11	112041-14A
R-7-1′	12/09/11	112041-15A
R-7-2′	12/09/11	112041-16A
R-8-1′	12/09/11	112041-17A
R-8-2′	12/09/11	112041-18A
R-9-1′	12/09/11	112041-19A
R-9-2′	12/09/11	112041-20A
R-10-1′	12/09/11	112041-21A
R-10-2′	12/09/11	112041-22A
R-11-1′	12/09/11	112041-23A
R-11-2′	12/09/11	112041-24A
R-12-1′	12/09/11	112041-25A
R-12-2′	12/09/11	112041-26A
R-12-2′(dup)	12/09/11	112041-27A
R-13-1′	12/09/11	112041-28A
R-13-2′	12/09/11	112041-29A
R-14-1′	12/09/11	112041-30A

SAMPLE IDENTIFICATION	DATE SAMPLED	LABORATORY NUMBER
R-14-2′	12/09/11	112041-31A
R-15-1′	12/09/11	112041-32A
R-15-2′	12/09/11	112041-33A
L-1-1′	12/09/11	112041-34A
L-1-1′ (dup)	12/09/11	112041-35A
L-2-1′	12/09/11	112041-36A
L-3-1′	12/09/11	112041-37A
S-1-3.5′	12/09/11	112041-38A
S-2-2′	12/09/11	112041-39A
S-3-2′	12/09/11	112041-40A
EB-1	12/09/11	112041-41A

Reviewed and Approved by:

Michael C.C. Lu
Laboratory Director

CHEMTEK ENVIRONMENTAL LAB.
LABORATORY ANALYSIS REPORT

Client : URS
Project : Ken Hahn E. Ridgeline
Job No. : 112041 Date: 12-23-11

Analysis:EPA 8015M (TPH Diesel range, Oil range)Unit: mg/kg or ppm

Sample ID : See below Sample date : 12-09-11
Sample matrix : soil Analysis date : 12-13/14-11

Sample				C13-C22	DF	DLR	C23-C36	DF	DLR
R-1-1′				ND	1	5.0	ND	1	10
R-1-2′				ND	1	5.0	ND	1	10
R-2-1′				ND	1	5.0	ND	1	10
R-2-2′				ND	1	5.0	ND	1	10
R-2-2′ (dup)				ND	1	5.0	ND	1	10
R-3-1′				ND	10	50	420	10	100
R-3-2′				ND	1	5.0	33	1	10
R-4-1′				ND	1	5.0	ND	1	10
R-4-2′				ND	1	5.0	ND	1	10
R-5-1′				ND	10	50	150	10	100
R-5-2′				ND	1	5.0	ND	1	10
R-5-2′ (dup)				ND	1	5.0	ND	1	10
R-6-1′				ND	1	5.0	47	1	10
R-6-2′				ND	1	5.0	ND	1	10
R-7-1′				ND	10	50	250	10	100
R-7-2′				ND	1	5.0	ND	1	10
R-8-1′				ND	1	5.0	11	1	10
R-8-2′				ND	1	5.0	22	1	10
R-9-1′				ND	1	5.0	ND	1	10
R-9-2′				27,000	10	50	25,000	10	100
R-10-1′				2,900	10	50	4,200	10	100
R-10-2′				24,000	20	100	29,000	20	200
R-11-1′				10,000	10	50	13,000	10	100
R-11-2′				4,700	10	50	4,700	10	100
R-12-1′				ND	2	10	80	2	20
R-12-2′				21,000	10	50	16,000	10	100
R-12-2′ (dup)				24,000	10	50	20,000	10	100
R-13-1′				ND	1	5.0	ND	1	10
R-13-2′				80	1	5.0	410	1	10
R-14-1′				ND	1	5.0	15	1	10
R-14-2′				ND	1	5.0	ND	1	10
R-15-1′				ND	1	5.0	26	1	10
R-15-2′				4,100	10	50	4,400	10	100
L-1-1′				ND	1	5.0	42	1	10
L-1-1′ (dup)				ND	1	5.0	36	1	10
L-2-1′				ND	1	5.0	16	1	10
L-3-1′				ND	1	5.0	65	1	10
S-1-3.5′				ND	1	5.0	12	1	10
S-2-2′				ND	1	5.0	ND	1	10
S-3-2′				ND	1	5.0	52	1	10

ND : NOT DETECTED BELOW DLR
DLR: DETECTION LIMIT FOR REPORTING PURPOSES

CHEMTEK ENVIRONMENTAL LAB.
LABORATORY ANALYSIS REPORT

Client : URS
Project : Ken Hahn E. Ridgeline
Job No. : 112041 Date: 12-23-11

Analysis:EPA 8015M (TPH Diesel range, Oil range)Unit: mg/l or ppm

Sample ID : See below Sample date : 12-09-11
Sample matrix : water Analysis date : 12-14-11

Sample				C13-C22	DF	DLR	C23-C36	DF	DLR
EB-1				ND	1	3.0	ND	1	5.0

ND : NOT DETECTED BELOW DLR
DLR: DETECTION LIMIT FOR REPORTING PURPOSES

CHEMTEK ENVIRONMENTAL LAB.
LABORATORY ANALYSIS REPORT

Client : URS
Project : Ken Hahn E. Ridgeline
Job No. : 112041 Date: 12-23-11

Analysis:EPA 8270C(Semi-VOCs Organics by GC-MS) Unit: µg/Kg or ppb
Sample ID : R-9-2' Sample date : 12/09/11
Sample matrix : soil Analysis date : 12/23/11
Dilution Factor : 2.5

Compound	Result	DLR	Compound	Result	DLR
Phenol	ND	500	Acenaphthene	ND	500
bis(2-Chloroethyl)Ether	ND	500	2,4-Dinitrophenol	ND	500
2-Chlorophenol	ND	500	Dibenzofuran	ND	500
1,3-Dichlorobenzene	ND	500	4-Nitrophenol	ND	500
1,4-Dichlorobenzene	ND	500	2,4-Dinitrotoluene	ND	500
Benzyl alcohol	ND	1000	Fluorene	2,900	500
1,2-Dichlorobenzene	ND	500	Diethyl Phthalate	ND	500
2-Methylphenol(O-cresol)	ND	500	4-Chlorophenyl Phenyl Ether	ND	500
bis(2-Chloroisopropyl)Ether	ND	500	4-Nitroaniline	ND	500
n-Nitroso-di-n-Propylamine	ND	500	4,6-Dinitro-2-methylphenol	ND	500
4-Methylphenol(P-cresol)	ND	500	N-Nitrosodiphenylamine	ND	500
Hexachloroethane	ND	500	4-Bromophenyl Phenyl Ether	ND	500
Nitrobenzene	ND	500	Hexachlorobenzene(total)	ND	500
Isophorone	ND	500	Pentachlorophenol	ND	2500
2-Nitrophenol	ND	500	Phenanthrene	9,600	500
2,4-Dimethylphenol	ND	500	Anthracene	ND	500
bis(2-Chloroethoxy) Methane	ND	500	Di-n-Butyl Phthalate	ND	500
2,4-Dichlorophenol	ND	500	Fluoranthene	ND	500
1,2,4-Trichlorobenzene	ND	500	Pyrene	ND	500
Naphthalene	1,900	500	Butyl Benzyl Phthalate	ND	500
4-Chloroaniline	ND	500	Benzo(a)anthracene	ND	500
Hexachlorobutadiene	ND	500	3,3-Dichlorobenzidine	ND	500
4-Chloro-3-Methylphenol	ND	500	Chrysene	5,100	500
2-Methlynaphthalene	5,200	500	bis(2-Ethylhexyl) Phthalate	ND	500
Hexachlorocyclopentadiene	ND	500	Di-N-Octyl Phthalate	ND	500
2,4,6-Trichlorophenol	ND	500	Benzo(b)flouranthene	ND	500
2,4,5-Trichlorophenol	ND	500	Benzo(k)flouranthene	ND	500
2-Chloronaphthalene	ND	500	Benzo(a)pyrene	ND	500
2-Nitroaniline	ND	500	Indeno(1,2,3-C,D)Pyrene	ND	500
Dimethyl Phthalate	ND	500	Dibenz(a,h)anthracene	ND	500
Acenaphthylene	990	500	Benzo(g,h,i)perylene	ND	500
2,6-Dinitrotoluene	ND	500	N-Nitrosodiemethylamine	ND	500
3-Nitroaniline	ND	500	Pyridine	ND	500
Carbazole	ND	500	Aniline	ND	500
			Benzidine	ND	500

ND : NOT DETECTED BELOW DLR
DLR: DETECTION LIMIT FOR REPORTING PURPOSES

CHEMTEK ENVIRONMENTAL LAB.
LABORATORY ANALYSIS REPORT

Client : URS
Project : Ken Hahn E. Ridgeline
Job No. : 112041 Date: 12-23-11

Analysis:EPA 8270C(Semi-VOCs Organics by GC-MS) Unit: µg/Kg or ppb
Sample ID : R-10-2' Sample date : 12/09/11
Sample matrix : soil Analysis date : 12/23/11
Dilution Factor : 3.3

Compound	Result	DLR	Compound	Result	DLR
Phenol	ND	667	Acenaphthene	ND	667
bis(2-Chloroethyl)Ether	ND	667	2,4-Dinitrophenol	ND	667
2-Chlorophenol	ND	667	Dibenzofuran	ND	667
1,3-Dichlorobenzene	ND	667	4-Nitrophenol	ND	667
1,4-Dichlorobenzene	ND	667	2,4-Dinitrotoluene	ND	667
Benzyl alcohol	ND	1320	Fluorene	ND	667
1,2-Dichlorobenzene	ND	667	Diethyl Phthalate	ND	667
2-Methylphenol(O-cresol)	ND	667	4-Chlorophenyl Phenyl Ether	ND	667
bis(2-Chloroisopropyl)Ether	ND	667	4-Nitroaniline	ND	667
n-Nitroso-di-n-Propylamine	ND	667	4,6-Dinitro-2-methylphenol	ND	667
4-Methylphenol(P-cresol)	ND	667	N-Nitrosodiphenylamine	ND	667
Hexachloroethane	ND	667	4-Bromophenyl Phenyl Ether	ND	667
Nitrobenzene	ND	667	Hexachlorobenzene(total)	ND	667
Isophorone	ND	667	Pentachlorophenol	ND	3300
2-Nitrophenol	ND	667	Phenanthrene	ND	667
2,4-Dimethylphenol	ND	667	Anthracene	ND	667
bis(2-Chloroethoxy) Methane	ND	667	Di-n-Butyl Phthalate	ND	667
2,4-Dichlorophenol	ND	667	Fluoranthene	ND	667
1,2,4-Trichlorobenzene	ND	667	Pyrene	ND	667
Naphthalene	ND	667	Butyl Benzyl Phthalate	ND	667
4-Chloroaniline	ND	667	Benzo(a)anthracene	ND	667
Hexachlorobutadiene	ND	667	3,3-Dichlorobenzidine	ND	667
4-Chloro-3-Methylphenol	ND	667	Chrysene	ND	667
2-Methlynaphthalene	ND	667	bis(2-Ethylhexyl) Phthalate	ND	667
Hexachlorocyclopentadiene	ND	667	Di-N-Octyl Phthalate	ND	667
2,4,6-Trichlorophenol	ND	667	Benzo(b)flouranthene	ND	667
2,4,5-Trichlorophenol	ND	667	Benzo(k)flouranthene	ND	667
2-Chloronaphthalene	ND	667	Benzo(a)pyrene	ND	667
2-Nitroaniline	ND	667	Indeno(1,2,3-C,D)Pyrene	ND	667
Dimethyl Phthalate	ND	667	Dibenz(a,h)anthracene	ND	667
Acenaphthylene	ND	667	Benzo(g,h,i)perylene	ND	667
2,6-Dinitrotoluene	ND	667	N-Nitrosodiemethylamine	ND	667
3-Nitroaniline	ND	667	Pyridine	ND	667
Carbazole	ND	667	Aniline	ND	667
			Benzidine	ND	667

ND : NOT DETECTED BELOW DLR
DLR: DETECTION LIMIT FOR REPORTING PURPOSES

CHEMTEK ENVIRONMENTAL LAB.
LABORATORY ANALYSIS REPORT

Client : URS
Project : Ken Hahn E. Ridgeline
Job No. : 112041 Date: 12-23-11

Analysis:EPA 8270C(Semi-VOCs Organics by GC-MS) Unit: µg/Kg or ppb
Sample ID : R-11-1' Sample date : 12/09/11
Sample matrix : soil Analysis date : 12/23/11
Dilution Factor : 2.5

Compound	Result	DLR	Compound	Result	DLR
Phenol	ND	500	Acenaphthene	ND	500
bis(2-Chloroethyl)Ether	ND	500	2,4-Dinitrophenol	ND	500
2-Chlorophenol	ND	500	Dibenzofuran	ND	500
1,3-Dichlorobenzene	ND	500	4-Nitrophenol	ND	500
1,4-Dichlorobenzene	ND	500	2,4-Dinitrotoluene	ND	500
Benzyl alcohol	ND	1000	Fluorene	ND	500
1,2-Dichlorobenzene	ND	500	Diethyl Phthalate	ND	500
2-Methylphenol(O-cresol)	ND	500	4-Chlorophenyl Phenyl Ether	ND	500
bis(2-Chloroisopropyl)Ether	ND	500	4-Nitroaniline	ND	500
n-Nitroso-di-n-Propylamine	ND	500	4,6-Dinitro-2-methylphenol	ND	500
4-Methylphenol(P-cresol)	ND	500	N-Nitrosodiphenylamine	ND	500
Hexachloroethane	ND	500	4-Bromophenyl Phenyl Ether	ND	500
Nitrobenzene	ND	500	Hexachlorobenzene(total)	ND	500
Isophorone	ND	500	Pentachlorophenol	ND	2500
2-Nitrophenol	ND	500	Phenanthrene	ND	500
2,4-Dimethylphenol	ND	500	Anthracene	ND	500
bis(2-Chloroethoxy) Methane	ND	500	Di-n-Butyl Phthalate	ND	500
2,4-Dichlorophenol	ND	500	Fluoranthene	ND	500
1,2,4-Trichlorobenzene	ND	500	Pyrene	ND	500
Naphthalene	ND	500	Butyl Benzyl Phthalate	ND	500
4-Chloroaniline	ND	500	Benzo(a)anthracene	ND	500
Hexachlorobutadiene	ND	500	3,3-Dichlorobenzidine	ND	500
4-Chloro-3-Methylphenol	ND	500	Chrysene	ND	500
2-Methlynaphthalene	ND	500	bis(2-Ethylhexyl) Phthalate	ND	500
Hexachlorocyclopentadiene	ND	500	Di-N-Octyl Phthalate	ND	500
2,4,6-Trichlorophenol	ND	500	Benzo(b)flouranthene	ND	500
2,4,5-Trichlorophenol	ND	500	Benzo(k)flouranthene	ND	500
2-Chloronaphthalene	ND	500	Benzo(a)pyrene	ND	500
2-Nitroaniline	ND	500	Indeno(1,2,3-C,D)Pyrene	ND	500
Dimethyl Phthalate	ND	500	Dibenz(a,h)anthracene	ND	500
Acenaphthylene	ND	500	Benzo(g,h,i)perylene	ND	500
2,6-Dinitrotoluene	ND	500	N-Nitrosodiemethylamine	ND	500
3-Nitroaniline	ND	500	Pyridine	ND	500
Carbazole	ND	500	Aniline	ND	500
			Benzidine	ND	500

ND : NOT DETECTED BELOW DLR
DLR: DETECTION LIMIT FOR REPORTING PURPOSES

CHEMTEK ENVIRONMENTAL LAB.
LABORATORY ANALYSIS REPORT

Client : URS
Project : Ken Hahn E. Ridgeline
Job No. : 112041 Date: 12-23-11

Analysis:EPA 8270C(Semi-VOCs Organics by GC-MS) Unit: µg/Kg or ppb
Sample ID : R-11-2' Sample date : 12/09/11
Sample matrix : soil Analysis date : 12/23/11
Dilution Factor : 2.5

Compound	Result	DLR	Compound	Result	DLR
Phenol	ND	500	Acenaphthene	ND	500
bis(2-Chloroethyl)Ether	ND	500	2,4-Dinitrophenol	ND	500
2-Chlorophenol	ND	500	Dibenzofuran	ND	500
1,3-Dichlorobenzene	ND	500	4-Nitrophenol	ND	500
1,4-Dichlorobenzene	ND	500	2,4-Dinitrotoluene	ND	500
Benzyl alcohol	ND	1000	Fluorene	570	500
1,2-Dichlorobenzene	ND	500	Diethyl Phthalate	ND	500
2-Methylphenol(O-cresol)	ND	500	4-Chlorophenyl Phenyl Ether	ND	500
bis(2-Chloroisopropyl)Ether	ND	500	4-Nitroaniline	ND	500
n-Nitroso-di-n-Propylamine	ND	500	4,6-Dinitro-2-methylphenol	ND	500
4-Methylphenol(P-cresol)	ND	500	N-Nitrosodiphenylamine	ND	500
Hexachloroethane	ND	500	4-Bromophenyl Phenyl Ether	ND	500
Nitrobenzene	ND	500	Hexachlorobenzene(total)	ND	500
Isophorone	ND	500	Pentachlorophenol	ND	2500
2-Nitrophenol	ND	500	Phenanthrene	ND	500
2,4-Dimethylphenol	ND	500	Anthracene	ND	500
bis(2-Chloroethoxy) Methane	ND	500	Di-n-Butyl Phthalate	ND	500
2,4-Dichlorophenol	ND	500	Fluoranthene	ND	500
1,2,4-Trichlorobenzene	ND	500	Pyrene	ND	500
Naphthalene	700	500	Butyl Benzyl Phthalate	ND	500
4-Chloroaniline	ND	500	Benzo(a)anthracene	ND	500
Hexachlorobutadiene	ND	500	3,3-Dichlorobenzidine	ND	500
4-Chloro-3-Methylphenol	ND	500	Chrysene	ND	500
2-Methlynaphthalene	1,720	500	bis(2-Ethylhexyl) Phthalate	ND	500
Hexachlorocyclopentadiene	ND	500	Di-N-Octyl Phthalate	ND	500
2,4,6-Trichlorophenol	ND	500	Benzo(b)flouranthene	ND	500
2,4,5-Trichlorophenol	ND	500	Benzo(k)flouranthene	ND	500
2-Chloronaphthalene	ND	500	Benzo(a)pyrene	ND	500
2-Nitroaniline	ND	500	Indeno(1,2,3-C,D)Pyrene	ND	500
Dimethyl Phthalate	ND	500	Dibenz(a,h)anthracene	ND	500
Acenaphthylene	ND	500	Benzo(g,h,i)perylene	ND	500
2,6-Dinitrotoluene	ND	500	N-Nitrosodiemethylamine	ND	500
3-Nitroaniline	ND	500	Pyridine	ND	500
Carbazole	ND	500	Aniline	ND	500
			Benzidine	ND	500

ND : NOT DETECTED BELOW DLR
DLR: DETECTION LIMIT FOR REPORTING PURPOSES

CHEMTEK ENVIRONMENTAL LAB.
LABORATORY ANALYSIS REPORT

Client : URS
Project : Ken Hahn E. Ridgeline
Job No. : 112041 Date: 12-23-11

Analysis:EPA 8270C(Semi-VOCs Organics by GC-MS) Unit: µg/Kg or ppb
Sample ID : R-12-2' Sample date : 12/09/11
Sample matrix : soil Analysis date : 12/23/11
Dilution Factor : 3

Compound	Result	DLR	Compound	Result	DLR
Phenol	ND	600	Acenaphthene	ND	600
bis(2-Chloroethyl)Ether	ND	600	2,4-Dinitrophenol	ND	600
2-Chlorophenol	ND	600	Dibenzofuran	ND	600
1,3-Dichlorobenzene	ND	600	4-Nitrophenol	ND	600
1,4-Dichlorobenzene	ND	600	2,4-Dinitrotoluene	ND	600
Benzyl alcohol	ND	1200	Fluorene	ND	600
1,2-Dichlorobenzene	ND	600	Diethyl Phthalate	ND	600
2-Methylphenol(O-cresol)	ND	600	4-Chlorophenyl Phenyl Ether	ND	600
bis(2-Chloroisopropyl)Ether	ND	600	4-Nitroaniline	ND	600
n-Nitroso-di-n-Propylamine	ND	600	4,6-Dinitro-2-methylphenol	ND	600
4-Methylphenol(P-cresol)	ND	600	N-Nitrosodiphenylamine	ND	600
Hexachloroethane	ND	600	4-Bromophenyl Phenyl Ether	ND	600
Nitrobenzene	ND	600	Hexachlorobenzene(total)	ND	600
Isophorone	ND	600	Pentachlorophenol	ND	3000
2-Nitrophenol	ND	600	Phenanthrene	ND	600
2,4-Dimethylphenol	ND	600	Anthracene	ND	600
bis(2-Chloroethoxy) Methane	ND	600	Di-n-Butyl Phthalate	ND	600
2,4-Dichlorophenol	ND	600	Fluoranthene	ND	600
1,2,4-Trichlorobenzene	ND	600	Pyrene	ND	600
Naphthalene	ND	600	Butyl Benzyl Phthalate	ND	600
4-Chloroaniline	ND	600	Benzo(a)anthracene	ND	600
Hexachlorobutadiene	ND	600	3,3-Dichlorobenzidine	ND	600
4-Chloro-3-Methylphenol	ND	600	Chrysene	ND	600
2-Methlynaphthalene	ND	600	bis(2-Ethylhexyl) Phthalate	ND	600
Hexachlorocyclopentadiene	ND	600	Di-N-Octyl Phthalate	ND	600
2,4,6-Trichlorophenol	ND	600	Benzo(b)flouranthene	ND	600
2,4,5-Trichlorophenol	ND	600	Benzo(k)flouranthene	ND	600
2-Chloronaphthalene	ND	600	Benzo(a)pyrene	ND	600
2-Nitroaniline	ND	600	Indeno(1,2,3-C,D)Pyrene	ND	600
Dimethyl Phthalate	ND	600	Dibenz(a,h)anthracene	ND	600
Acenaphthylene	ND	600	Benzo(g,h,i)perylene	ND	600
2,6-Dinitrotoluene	ND	600	N-Nitrosodiemethylamine	ND	600
3-Nitroaniline	ND	600	Pyridine	ND	600
Carbazole	ND	600	Aniline	ND	600
			Benzidine	ND	600

ND : NOT DETECTED BELOW DLR
DLR: DETECTION LIMIT FOR REPORTING PURPOSES

CHEMTEK ENVIRONMENTAL LAB.
LABORATORY ANALYSIS REPORT

Client : URS
Project : Ken Hahn E. Ridgeline
Job No. : 112041 Date: 12-23-11

Analysis:EPA 8270C(Semi-VOCs Organics by GC-MS) Unit: µg/Kg or ppb
Sample ID : S-1-3.5' Sample date : 12/09/11
Sample matrix : soil Analysis date : 12/20/11
Dilution Factor : 1

Compound	Result	DLR	Compound	Result	DLR
Phenol	ND	200	Acenaphthene	ND	200
bis(2-Chloroethyl)Ether	ND	200	2,4-Dinitrophenol	ND	200
2-Chlorophenol	ND	200	Dibenzofuran	ND	200
1,3-Dichlorobenzene	ND	200	4-Nitrophenol	ND	200
1,4-Dichlorobenzene	ND	200	2,4-Dinitrotoluene	ND	200
Benzyl alcohol	ND	400	Fluorene	ND	200
1,2-Dichlorobenzene	ND	200	Diethyl Phthalate	ND	200
2-Methylphenol(O-cresol)	ND	200	4-Chlorophenyl Phenyl Ether	ND	200
bis(2-Chloroisopropyl)Ether	ND	200	4-Nitroaniline	ND	200
n-Nitroso-di-n-Propylamine	ND	200	4,6-Dinitro-2-methylphenol	ND	200
4-Methylphenol(P-cresol)	ND	200	N-Nitrosodiphenylamine	ND	200
Hexachloroethane	ND	200	4-Bromophenyl Phenyl Ether	ND	200
Nitrobenzene	ND	200	Hexachlorobenzene(total)	ND	200
Isophorone	ND	200	Pentachlorophenol	ND	1000
2-Nitrophenol	ND	200	Phenanthrene	ND	200
2,4-Dimethylphenol	ND	200	Anthracene	ND	200
bis(2-Chloroethoxy) Methane	ND	200	Di-n-Butyl Phthalate	ND	200
2,4-Dichlorophenol	ND	200	Fluoranthene	ND	200
1,2,4-Trichlorobenzene	ND	200	Pyrene	ND	200
Naphthalene	ND	200	Butyl Benzyl Phthalate	ND	200
4-Chloroaniline	ND	200	Benzo(a)anthracene	ND	200
Hexachlorobutadiene	ND	200	3,3-Dichlorobenzidine	ND	200
4-Chloro-3-Methylphenol	ND	200	Chrysene	ND	200
2-Methlynaphthalene	ND	200	bis(2-Ethylhexyl) Phthalate	ND	200
Hexachlorocyclopentadiene	ND	200	Di-N-Octyl Phthalate	ND	200
2,4,6-Trichlorophenol	ND	200	Benzo(b)flouranthene	ND	200
2,4,5-Trichlorophenol	ND	200	Benzo(k)flouranthene	ND	200
2-Chloronaphthalene	ND	200	Benzo(a)pyrene	ND	200
2-Nitroaniline	ND	200	Indeno(1,2,3-C,D)Pyrene	ND	200
Dimethyl Phthalate	ND	200	Dibenz(a,h)anthracene	ND	200
Acenaphthylene	ND	200	Benzo(g,h,i)perylene	ND	200
2,6-Dinitrotoluene	ND	200	N-Nitrosodiemethylamine	ND	200
3-Nitroaniline	ND	200	Pyridine	ND	200
Carbazole	ND	200	Aniline	ND	200
			Benzidine	ND	200

ND : NOT DETECTED BELOW DLR
DLR: DETECTION LIMIT FOR REPORTING PURPOSES

CHEMTEK ENVIRONMENTAL LAB.
LABORATORY ANALYSIS REPORT

Client : URS
Project : Ken Hahn E. Ridgeline
Job No. : 112041 Date: 12-23-11

Analysis:EPA 8270C(Semi-VOCs Organics by GC-MS) Unit: µg/Kg or ppb
Sample ID : S-2-2' Sample date : 12/09/11
Sample matrix : soil Analysis date : 12/20/11
Dilution Factor : 1

Compound	Result	DLR	Compound	Result	DLR
Phenol	ND	200	Acenaphthene	ND	200
bis(2-Chloroethyl)Ether	ND	200	2,4-Dinitrophenol	ND	200
2-Chlorophenol	ND	200	Dibenzofuran	ND	200
1,3-Dichlorobenzene	ND	200	4-Nitrophenol	ND	200
1,4-Dichlorobenzene	ND	200	2,4-Dinitrotoluene	ND	200
Benzyl alcohol	ND	400	Fluorene	ND	200
1,2-Dichlorobenzene	ND	200	Diethyl Phthalate	ND	200
2-Methylphenol(O-cresol)	ND	200	4-Chlorophenyl Phenyl Ether	ND	200
bis(2-Chloroisopropyl)Ether	ND	200	4-Nitroaniline	ND	200
n-Nitroso-di-n-Propylamine	ND	200	4,6-Dinitro-2-methylphenol	ND	200
4-Methylphenol(P-cresol)	ND	200	N-Nitrosodiphenylamine	ND	200
Hexachloroethane	ND	200	4-Bromophenyl Phenyl Ether	ND	200
Nitrobenzene	ND	200	Hexachlorobenzene(total)	ND	200
Isophorone	ND	200	Pentachlorophenol	ND	1000
2-Nitrophenol	ND	200	Phenanthrene	ND	200
2,4-Dimethylphenol	ND	200	Anthracene	ND	200
bis(2-Chloroethoxy) Methane	ND	200	Di-n-Butyl Phthalate	ND	200
2,4-Dichlorophenol	ND	200	Fluoranthene	ND	200
1,2,4-Trichlorobenzene	ND	200	Pyrene	ND	200
Naphthalene	ND	200	Butyl Benzyl Phthalate	ND	200
4-Chloroaniline	ND	200	Benzo(a)anthracene	ND	200
Hexachlorobutadiene	ND	200	3,3-Dichlorobenzidine	ND	200
4-Chloro-3-Methylphenol	ND	200	Chrysene	ND	200
2-Methlynaphthalene	ND	200	bis(2-Ethylhexyl) Phthalate	ND	200
Hexachlorocyclopentadiene	ND	200	Di-N-Octyl Phthalate	ND	200
2,4,6-Trichlorophenol	ND	200	Benzo(b)flouranthene	ND	200
2,4,5-Trichlorophenol	ND	200	Benzo(k)flouranthene	ND	200
2-Chloronaphthalene	ND	200	Benzo(a)pyrene	ND	200
2-Nitroaniline	ND	200	Indeno(1,2,3-C,D)Pyrene	ND	200
Dimethyl Phthalate	ND	200	Dibenz(a,h)anthracene	ND	200
Acenaphthylene	ND	200	Benzo(g,h,i)perylene	ND	200
2,6-Dinitrotoluene	ND	200	N-Nitrosodiemethylamine	ND	200
3-Nitroaniline	ND	200	Pyridine	ND	200
Carbazole	ND	200	Aniline	ND	200
			Benzidine	ND	200

ND : NOT DETECTED BELOW DLR
DLR: DETECTION LIMIT FOR REPORTING PURPOSES

CHEMTEK ENVIRONMENTAL LAB.
LABORATORY ANALYSIS REPORT

Client : URS
Project : Ken Hahn E. Ridgeline
Job No. : 112041 Date: 12-23-11

Analysis:EPA 8270C(Semi-VOCs Organics by GC-MS) Unit: µg/Kg or ppb
Sample ID : S-3-2' Sample date : 12/09/11
Sample matrix : soil Analysis date : 12/20/11
Dilution Factor : 1

Compound	Result	DLR	Compound	Result	DLR
Phenol	ND	200	Acenaphthene	ND	200
bis(2-Chloroethyl)Ether	ND	200	2,4-Dinitrophenol	ND	200
2-Chlorophenol	ND	200	Dibenzofuran	ND	200
1,3-Dichlorobenzene	ND	200	4-Nitrophenol	ND	200
1,4-Dichlorobenzene	ND	200	2,4-Dinitrotoluene	ND	200
Benzyl alcohol	ND	400	Fluorene	ND	200
1,2-Dichlorobenzene	ND	200	Diethyl Phthalate	ND	200
2-Methylphenol(O-cresol)	ND	200	4-Chlorophenyl Phenyl Ether	ND	200
bis(2-Chloroisopropyl)Ether	ND	200	4-Nitroaniline	ND	200
n-Nitroso-di-n-Propylamine	ND	200	4,6-Dinitro-2-methylphenol	ND	200
4-Methylphenol(P-cresol)	ND	200	N-Nitrosodiphenylamine	ND	200
Hexachloroethane	ND	200	4-Bromophenyl Phenyl Ether	ND	200
Nitrobenzene	ND	200	Hexachlorobenzene(total)	ND	200
Isophorone	ND	200	Pentachlorophenol	ND	1000
2-Nitrophenol	ND	200	Phenanthrene	ND	200
2,4-Dimethylphenol	ND	200	Anthracene	ND	200
bis(2-Chloroethoxy) Methane	ND	200	Di-n-Butyl Phthalate	ND	200
2,4-Dichlorophenol	ND	200	Fluoranthene	ND	200
1,2,4-Trichlorobenzene	ND	200	Pyrene	ND	200
Naphthalene	ND	200	Butyl Benzyl Phthalate	ND	200
4-Chloroaniline	ND	200	Benzo(a)anthracene	ND	200
Hexachlorobutadiene	ND	200	3,3-Dichlorobenzidine	ND	200
4-Chloro-3-Methylphenol	ND	200	Chrysene	ND	200
2-Methlynaphthalene	ND	200	bis(2-Ethylhexyl) Phthalate	ND	200
Hexachlorocyclopentadiene	ND	200	Di-N-Octyl Phthalate	ND	200
2,4,6-Trichlorophenol	ND	200	Benzo(b)flouranthene	ND	200
2,4,5-Trichlorophenol	ND	200	Benzo(k)flouranthene	ND	200
2-Chloronaphthalene	ND	200	Benzo(a)pyrene	ND	200
2-Nitroaniline	ND	200	Indeno(1,2,3-C,D)Pyrene	ND	200
Dimethyl Phthalate	ND	200	Dibenz(a,h)anthracene	ND	200
Acenaphthylene	ND	200	Benzo(g,h,i)perylene	ND	200
2,6-Dinitrotoluene	ND	200	N-Nitrosodiemethylamine	ND	200
3-Nitroaniline	ND	200	Pyridine	ND	200
Carbazole	ND	200	Aniline	ND	200
			Benzidine	ND	200

ND : NOT DETECTED BELOW DLR
DLR: DETECTION LIMIT FOR REPORTING PURPOSES

CHEMTEK ENVIRONMENTAL LAB.
LABORATORY ANALYSIS REPORT

Client : URS
Project : Ken Hahn E. Ridgeline
Job No. : 112041 Date: 12-23-11

Analysis : TTLC Metals (Title 22)
Method : AA Flame (EPA 7000 series)
Reporting Unit: mg/L or ppm

Sample ID : see below
Sample type : water
Sample date : 12-09-11
Analysis date: 12-15-11

Element	Sample ID				Detection Limit
	EB-1				mg/L
Antimony	ND				0.05
Arsenic	ND				0.05
Barium	ND				0.05
Beryllium	ND				0.05
Cadmium	ND				0.05
Chromium	ND				0.05
Cobalt	ND				0.05
Copper	ND				0.05
Lead	ND				0.05
Mercury	ND				0.01
Molybdenum	ND				0.05
Nickel	ND				0.05
Selenium	ND				0.05
Silver	ND				0.05
Thallium	ND				0.10
Vanadium	ND				0.05
Zinc	ND				0.50

TTLC: Total Threshold Limit Concentration
ND : Not detected at specified limit

CHEMTEK ENVIRONMENTAL LAB.
LABORATORY ANALYSIS REPORT

Client : URS
Project : Ken Hahn E. Ridgeline
Job No. : 112041 Date: 12-23-11

Analysis : TTLC Metals (Title 22)
Method : AA Flame (EPA 7000 series)
Reporting Unit: mg/Kg or ppm

Sample ID : see below
Sample type : soil
Sample date : 12-09-11
Analysis date: 12-23-11

Element	Sample ID				Detection Limit
	S-1-3.5	S-2-2′	S-3-2′	R-10-2′	mg/Kg
Antimony	ND	ND	ND	ND	0.50
Arsenic	ND	ND	ND	5.1	0.50
Barium	85.6	45.9	48.7	35.6	1.00
Beryllium	ND	ND	ND	ND	0.50
Cadmium	ND	ND	ND	ND	0.50
Chromium	3.3	3.5	2.5	16.6	0.50
Cobalt	1.5	1.3	1.4	1.0	0.50
Copper	3.2	2.8	2.4	4.2	0.50
Lead	1.8	0.95	1.0	3.1	0.50
Mercury	0.14	0.23	0.21	0.26	0.05
Molybdenum	ND	ND	ND	ND	0.50
Nickel	2.1	2.2	1.6	3.2	0.50
Selenium	ND	ND	ND	ND	0.50
Silver	ND	ND	ND	ND	0.50
Thallium	ND	ND	ND	ND	1.00
Vanadium	ND	ND	ND	ND	1.00
Zinc	4.8	4.4	3.8	7.2	3.00

TTLC: Total Threshold Limit Concentration
ND : Not detected at specified limit

CHEMTEK ENVIRONMENTAL LAB.
LABORATORY ANALYSIS REPORT

Client : URS
Project : Ken Hahn E. Ridgeline
Job No. : 112041 Date: 12-23-11

Analysis : TTLC Metals (Title 22)
Method : AA Flame (EPA 7000 series)
Reporting Unit: mg/Kg or ppm

Sample ID : see below
Sample type : soil
Sample date : 12-09-11
Analysis date: 12-23-11

Element	Sample ID				Detection Limit
	R-11-1′	R-9-2′	R-12-2′	R-11-2′	mg/Kg
Antimony	ND	ND	ND	ND	0.50
Arsenic	4.1	7.9	ND	2.1	0.50
Barium	63.9	96.2	36.0	165	1.00
Beryllium	ND	ND	ND	ND	0.50
Cadmium	ND	ND	ND	ND	0.50
Chromium	16.6	30.8	6.7	6.9	0.50
Cobalt	1.1	1.6	ND	1.3	0.50
Copper	4.1	7.7	2.2	4.0	0.50
Lead	4.5	6.3	2.2	2.9	0.50
Mercury	0.23	0.23	0.29	0.17	0.05
Molybdenum	ND	ND	ND	ND	0.50
Nickel	3.2	6.1	1.5	3.2	0.50
Selenium	ND	ND	ND	ND	0.50
Silver	ND	ND	ND	ND	0.50
Thallium	ND	ND	ND	ND	1.00
Vanadium	ND	ND	ND	ND	1.00
Zinc	10.0	9.6	5.2	5.3	3.00

TTLC: Total Threshold Limit Concentration
ND : Not detected at specified limit

CHEMTEK ENVIRONMENTAL LAB.
LABORATORY ANALYSIS REPORT

Client : URS
Project : Ken Hahn E. Ridgeline
Job No. : 112041 Date: 12-23-11

Analysis : TTLC Metals (Title 22)
Method : AA Flame (EPA 7000 series)
Reporting Unit: mg/Kg or ppm

Sample ID : see below
Sample type : soil
Sample date : 12-09-11
Analysis date: 12-23-11

Element	Sample ID				Detection Limit
	R-13-1′	R-14-2′	R-15-2′	L-2-1′	mg/Kg
Antimony	ND	ND	ND	ND	0.50
Arsenic	ND	ND	ND	ND	0.50
Barium	43.6	27.3	84.3	14.9	1.00
Beryllium	ND	ND	ND	ND	0.50
Cadmium	ND	ND	ND	ND	0.50
Chromium	2.2	1.4	6.8	1.7	0.50
Cobalt	1.1	ND	0.70	0.70	0.50
Copper	2.3	ND	2.6	0.81	0.50
Lead	2.3	5.9	2.1	ND	0.50
Mercury	0.26	0.17	0.35	0.06	0.05
Molybdenum	ND	ND	ND	ND	0.50
Nickel	1.5	ND	1.7	0.62	0.50
Selenium	ND	ND	ND	ND	0.50
Silver	ND	ND	ND	ND	0.50
Thallium	ND	ND	ND	ND	1.00
Vanadium	ND	ND	ND	ND	1.00
Zinc	3.5	ND	12.7	3.4	3.00

TTLC: Total Threshold Limit Concentration
ND : Not detected at specified limit

CHEMTEK ENVIRONMENTAL LAB.
LABORATORY ANALYSIS REPORT

Client : URS
Project : Ken Hahn E. Ridgeline
Job No. : 112041 Date: 12-23-11
Analysis : Lead
Method : EPA 7420
Reporting Unit: mg/Kg or ppm
Sample Date : 12-09-11
Sample type : soil

Sample ID	Analysis Date	Lead (mg/Kg)
R-1-1′	12/15/11	ND
R-1-2′	12/15/11	ND
R-2-1′	12/15/11	ND
R-2-2′	12/15/11	ND
R-2-2′ (dup)	12/15/11	ND
R-3-1′	12/15/11	ND
R-3-2′	12/15/11	ND
R-4-1′	12/15/11	ND
R-4-2′	12/15/11	ND
R-5-1′	12/15/11	0.62
R-5-2′	12/15/11	ND
R-5-2′ (dup)	12/15/11	ND
R-6-1′	12/15/11	ND
R-6-2′	12/15/11	ND
R-7-1′	12/15/11	0.93
R-7-2′	12/15/11	ND
R-8-1′	12/15/11	ND
R-8-2′	12/15/11	ND
R-9-1′	12/15/11	ND
R-9-2′	12/15/11	2.4
R-10-1′	12/15/11	1.1
R-10-2′	12/15/11	2.7
R-11-1′	12/15/11	1.9
R-11-2′	12/15/11	1.1
R-12-1′	12/15/11	1.7
R-12-2′	12/15/11	2.2
R-12-2′ (dup)	12/15/11	1.5
R-13-1′	12/15/11	1.3
R-13-2′	12/15/11	2.1
R-14-1′	12/15/11	ND
R-14-2′	12/15/11	ND
R-15-1′	12/15/11	ND
R-15-2′	12/15/11	2.1
L-1-1′	12/15/11	ND
L-1-1′ (dup)	12/15/11	ND
L-2-1′	12/15/11	ND
L-3-1′	12/15/11	0.91
S-1-3.5′	12/15/11	0.64
S-2-2′	12/15/11	ND
S-3-2′	12/15/11	ND
Detection Limit		0.50

TTLC: Total Threshold Limit Concentration
ND: Not detected at specified limit

CHEMTEK ENVIRONMENTAL LAB.
LABORATORY ANALYSIS REPORT

Client : URS
Project : Ken Hahn E. Ridgeline
Job No. : 112041 Date: 12-23-11
Analysis : Arsenic
Method : EPA 7060
Reporting Unit: mg/Kg or ppm
Sample Date : 12-09-11
Sample type : soil

Sample ID	Analysis Date	Arsenic (mg/Kg)
R-1-1′	12/15/11	ND
R-1-2′	12/15/11	ND
R-2-1′	12/15/11	ND
R-2-2′	12/15/11	ND
R-2-2′ (dup)	12/15/11	ND
R-3-1′	12/15/11	ND
R-3-2′	12/15/11	ND
R-4-1′	12/15/11	ND
R-4-2′	12/15/11	ND
R-5-1′	12/15/11	ND
R-5-2′	12/15/11	ND
R-5-2′ (dup)	12/15/11	ND
R-6-1′	12/15/11	ND
R-6-2′	12/15/11	ND
R-7-1′	12/15/11	ND
R-7-2′	12/15/11	ND
R-8-1′	12/15/11	ND
R-8-2′	12/15/11	ND
R-9-1′	12/15/11	ND
R-9-2′	12/15/11	5.6
R-10-1′	12/15/11	ND
R-10-2′	12/15/11	2.9
R-11-1′	12/15/11	4.6
R-11-2′	12/15/11	1.1
R-12-1′	12/15/11	ND
R-12-2′	12/15/11	ND
R-12-2′ (dup)	12/15/11	ND
R-13-1′	12/15/11	ND
R-13-2′	12/15/11	ND
R-14-1′	12/15/11	ND
R-14-2′	12/15/11	ND
R-15-1′	12/15/11	ND
R-15-2′	12/15/11	ND
L-1-1′	12/15/11	ND
L-1-1′ (dup)	12/15/11	ND
L-2-1′	12/15/11	ND
L-3-1′	12/15/11	ND
S-1-3.5′	12/15/11	ND
S-2-2′	12/15/11	ND
S-3-2′	12/15/11	ND
		0.50

TTLC: Total Threshold Limit Concentration
ND: Not detected at specified limit

CHEMTEK Environmental Laboratories Inc.
13554 Larwin Circle, Santa Fe Springs, CA 90670
Tel. (562) 926-9848 FAX (562) 926-8324 Email: ChemtekLabs@hotmail.com
CA Dept of Health Accredited. (ELAP No. 1435) & Mobile Lab (ELAP No. 2629)

CHAIN OF CUSTODY RECORD

112041

Job No.: 29/03644

CUSTOMER INFORMATION

COMPANY NAME: UPS
PROJECT CONTACT: ALEXIS BATHOW
ADDRESS: 915 WILSHIRE BLVD. SUITE 700
CITY, STATE, ZIP: LOS ANGELES, CA 90017
PHONE: 213 991-1412 FAX: 213 991-2412
EMAIL: ALEXIS.BATHOW@UPS.COM

PROJECT INFORMATION

PROJECT NAME: KEN MARK / PIRELLI
SITE ADDRESS: 1400 S. LA CANADA BLVD
SAMPLED BY: CH KAMM
☑ EDF
TAT ☑ NORM ☐ 24 hr ☐ 48 hr ☐ Other

ANALYSIS REQUIRED

SAMPLE ID	DATE SAMPLED	TIME SAMPLED	TYPE *	REMARKS	NO. OF CONT	8015M TPH G	8015M TPH D & TPH O	BTEX/MTBE (8021 B)	VOCs (8260 B) FULL	OXYGENATES (8260 B) SHORT	TRPH (418.1)	COD / TSS	pH, Conductivity, Turbidity	Sulfide, Cyanide, O&G	CAM 17 Metals	As ina 1010	Pb ina 7420	SVOCs, SPAHs, PAHs 8270C	
R-15-2'	12/9/11	1152	SOIL		1		✓									✓	✓		
L-1-1'		1200																	
L-1-1' (dup)		1212																	
L-2-1'		1216																	
L-3-1'		1220																	
S-1-3.5'		1237													✓			✓	
S-2-3'		1245																	
S-3-2'		1253																	
EB-1		1300	H_2O		3		✓								✓	✓	✓	✓	

~~Analyze metals & SVOCs (+PAHs) for the five samples w/ highest TPH concentrations from samples starting w/ "R" and/or "L" + [R-9-2', R-11-2', R-12-2', & R-13-1']~~

PER PM:
Add SVOCs (+ PAHs) & CAM 17 Metals to Five samples w/ highest TPH-d & TPH-O conc.
* R-9-2' add SVOCs (+PAHs) & CAM 17 metals
* R-11-2' add SVOCs (+PAHs)
* R-12-2' add SVOCs (+PAHs)
* R-13-1' add CAM 17 metals

SIGNATURE	PRINT NAME	COMPANY NAME	DATE	TIME
RELINQUISHED BY:	SUE KAMM	UPS	12/9/11	1400
RECEIVED BY:				
RELINQUISHED BY:				
RECEIVED FOR LABORATORY BY:	Martinez	Chemtek	12/9/11	1700

* R-14-2 add CAM 17 metals
* R-15-2 add Cam 17 metals
* L-2-1 add CAM 17 metals

NOTE: Samples are discarded 30 days after results are reported unless other arrangements are made.

*Type: SO-Soil GW-Ground Water WW-Waste Water AQ-Aqueous A-Air OT-Other

Distribution : WHITE with report / YELLOW to CHEMTEK / PINK to courier

* FOR EB-1 run TPH-d, TPH-O, As & Pb