CVS/pharmacy

909 S. ATLANTIC BLVD. EAST LOS ANGELES, CA 90022-4003, CVS STORE NO. 4524

ISSUED FOR BID / PERMIT

DRAWING INDEX

■ CS COVER SHEET

HISTORICAL MITIGATION MEASURES
■ HMM-1 CONDITIONS OF APPROVAL
■ HMM-2 MITIGATION MEASURES
■ HMM-3 MITIGATION MEASURES
■ HMM-4 MITIGATION MEASURES

CIVIL (FOR REFERENCE ONLY)
■ C-1 TITLE
■ C-2 GENERAL NOTES
■ C-3 WHITTIER BLVD. DEMOLITION PLAN
■ C-4 SITE AND ATLANTIC BLVD. DEMOLITION PLAN
■ C-5 LOUIS PLACE/SOUTH DEMOLITION PLAN
■ C-6 HORIZONTAL CONTROL PLAN/NORTH
■ C-7 HORIZONTAL CONTROL PLAN/SOUTH
■ C-8 WHITTIER BLVD. IMPROVEMENT PLAN
■ C-9 ATLANTIC BLVD. IMPROVEMENT PLAN
■ C-10 LOUIS PLACE IMPROVEMENT PLAN
■ C-11 GRADING PLAN - NORTH
■ C-12 GRADING PLAN - SOUTH
■ C-13 SITE IMPROVEMENTS - NORTH
■ C-14 SITE IMPROVEMENTS - SOUTH
■ C-15 DETAILS
■ C-16 DETAILS
■ C-17 DETAILS
■ C-18 SITE AND STREET STRIPING PLAN
■ C-19 TRAFFIC SIGNED MODIFICATION PLAN

LANDSCAPE
■ L-1 IRRIGATION PLAN, NOTES, & DETAILS
■ L-2 LANDSCAPE PLAN

HISTORICAL PRESERVATION & DEMOLITION
■ HPD-1.1 HP & D - FLOOR PLAN
■ HPD-1.2 HP & D - MEZZANINE PLAN
■ HPD-3.1 HP & D - REFLECTED CEILING PLAN
■ HPD-3.1.1 HP & D - UPPER & MEZZ REFLECTED CEILING PLAN
■ HPD-4.1 HP & D - EXTERIOR ELEVATIONS
■ HPD-4.2 HP & D - EXTERIOR ELEVATIONS
■ HPD-5.1 HP & D - BUILDING SECTIONS/ ELEVATIONS

ARCHITECTURAL
■ AS-1.1 SITE PLAN (REFER TO C-18)
■ AS-1.2 (NOT USED)
■ A-0.1 CODE INFORMATION & EXIT PLANS
■ A-0.2 (NOT USED)
■ A-0.3 (NOT USED)
■ A-1.1 FLOOR PLAN
■ A-1.2 SECTIONS, DETAILS, & PARTITION TYPES
■ A-1.3 SECTIONS, & DETAILS
■ A-1.4 INTERIOR PERIMETER WALL SETIONS
■ A-1.5 MEZZANINE & EQUIPMENT PLATFORM
■ A-2.1 ROOF PLAN & DETAILS
■ A-3.1 REFLECTED CEILING PLAN & DETAILS
■ A-3.1.1 MEZZ' & EQUIP' PLATFORM REFLECTED CEILING PLAN
■ A-3.2 CEILING DETAILS
■ A-3.3 UPPER REFLECTED CEILING PLAN
■ A-4.1 EXTERIOR ELEVATIONS
■ A-4.2 INTERIOR ELEVATIONS - RETAIL AREA & DETAILS
■ A-5.1 WALL SECTIONS & DETAILS
■ A-5.2 PHARMACY SECTIONS & DETAILS
■ A-5.3 DRIVE-THRU PLAN, SECTIONS, & DETAILS
■ A-5.4 (NOT USED)
■ A-5.5 (NOT USED)
■ A-5.6 (NOT USED)
■ A-6.1 PHARMACY PLAN, SECTIONS, & ELEVATIONS
■ A-6.2 (NOT USED)
■ A-6.3 (NOT USED)
■ A-6.4 ENLARGED PLANS, DETAILS, & ELEVATIONS
■ A-7.1 DOOR & WINDOW DETAILS
■ A-7.2 SCHEDULES & DETAILS
■ A-7.3 FLOOR FINISH PLAN
■ A-8.1 SIGNAGE DETAILS (INTERIOR ONLY)
■ F-1 MERCHANDISE PLAN

STRUCTURAL
■ S-1 GENERAL STRUCTURAL NOTES
■ S-2 FOUNDATION PLAN & SCHEDULES
■ S-3 FRAMING PLANS
■ S-4 FRAMING PLANS
■ S-5 SECTIONS & DETAILS
■ S-6 SECTIONS & DETAILS
■ S-7 SECTIONS & DETAILS
■ S-8 SECTIONS & DETAILS
■ S-9 SECTIONS & DETAILS
■ S-10 DETAILS
■ S-11 DUMPSTER ENCLOURE PLAN & DETAILS

MECHANICAL/PLUMBING
■ M-0.1 CERTIFICATES OF COMPLIANCE
■ M-1.1 MECHANICAL HVAC FLOOR PLAN
■ M-1.2 MECHANICAL HVAC MEZZANINE PLAN
■ M-1.3 MECHANICAL SCHEDULES & DETAILS
■ M-1.4 MECHANICAL DETAILS
■ P-1.1 PLUMBING PLAN
■ P-1.2 PLUMBING RISERS
■ P-1.3 PLUMBING NOTES, DETAILS, & SCHEDULE

FIRE PROTECTION
■ FP-0 NOTES, DETAILS & REQUIREMENTS
■ FP-1 SITE PIPING PLAN
■ FP-2 SECTION, DETAILS & CALCS
■ FP-3 MEZZ. LEVEL PIPING PLAN
■ FP-4 FLOOR PIPING PLAN

ELECTRICAL
■ SE-1.1 SITE ELECTRICAL PLAN
■ SE-1.2 PHOTOMETRICS
■ E-0.1 CERTIFICATES OF COMPLIANCE & MANDATORY MEASURES
■ E-1.1 LIGHTING PLANS
■ E-1.2 POWER PLAN & LEGEND
■ E-1.3 PHARMACY & MEZZANINE POWER PLANS
■ E-1.4 PHARMACY POWER PLANS
■ E-2.1 POWER DETAILS
■ E-3.1 ELECTRICAL SCHEDULES & RISER DIAGRAM
■ E-3.2 ELECTRICAL NOTES & EMS DIAGRAM

PROJECT INFORMATION

The building shall be in compliance with the

2007 California Building Code ( ) = Referenced Section, with 2008 County of L. A. Amendments
2007 California Mechanical Code, with 2008 County of L. A. Amendments
2007 California Plumbing Code, with 2008 County of L. A. Amendments
2007 California Electrical Code, with 2008 County of L. A. Amendments
2007 California Historical Building Code, (Title 24, Part 8)

2007 California Energy Code (Title 24, Part 6)
2007 California Fire Code (Title 24, Part 9)
2007 California Building Code (Includes Accessibility) (Title 24, Part 2)

TEAM MEMBERS

LANDLORD:	CHARLES COMPANY 9034 W. SUNSET BLVD. WEST HOLLYWOOD CA 90069	JACK KURCHIAN TEL: (310) 247-0900 FAX: (310) 247-1525
ARCHITECT:	RKAA 18662 MACARTHUR BLVD. SUITE 200 IRVINE, CA 92612	CRAIG JOHNSON TEL: (949) 798-3838 FAX: (949) 798-3841
TENANT PROJECT MANAGER:	CVS/PHARMACY, INC. 777 S. HARBOR BLVD. SUITE E163 LA HABRA, CA 90631	ROBERT JAYE TEL: (714) 681-5512 FAX: (401) 652-9113
CONTRACTOR:	COMPANY NAME STREET ADDRESS SUITE NUMBER CITY, STATE, ZIP CODE	PROJECT CONTACT TEL: (000) 000-0000 FAX: (000) 000-0000
CIVIL ENGINEER:	AAE, INC. 1815 E. HEIM AVE. SUITE #100 ORANGE, CA 92865	KEN PUTNAM, P.E. TEL: (714) 940-0100 FAX: (714) 940-0700
STRUCTURAL ENGINEER:	LEE&LEE STRUCTURAL ENG. INC. 3550 WILSHIRE BLVD. SUITE #480 LOS ANGELES, CA 90010	SANG LEE/S.E. TEL : (213) 351-0034 FAX: (213) 368-0034
MECHANICAL/ PLUMBING/ ELECTRICAL ENGINEER:	RPM ENGINEERS, INC. 102 DISCOVERY IRVINE, CA 92618	MAURICE YEE, P.E. TEL: (949) 450-1229 x205 FAX: (949) 450-1454
HISTORICAL ARCHITECT:	CHATTEL ARCHITECTURE 13417 VENTURA BLVD. SHERMAN OAKS CA 91432-9795	ROBERT CHATTEL, A.I.A. TEL: (818) 788-7954 x7 FAX: (818) 788-9795
FIRE PROTECTION CONSULTANT	BAY CITY FIRE PROTECTION, INC. 22715 VICTORY BLVD WEST HILLS CA 91307	ASHGAN SHAHBODAGHLOO TEL: (818) 610-3062 FAX: (818) 230-7773

ABBREVIATIONS

(ABBREVIATIONS SHOWN ARE NOT NECESSARILY USED ON THE DRAWINGS)

A
AB ANCHOR BOLT
A/C AIR CONDITIONING
AC ALTERNATING CURRENT
ACI AMERICAN CONCRETE INSTITUTE
ADA AMERICANS WITH DISABILITIES ACT
ADJ ADJUSTABLE
AFF ABOVE FINISHED FLOOR
AISC AMERICAN INSTITUTE OF STEEL CONS.
ALUM ALUMINUM
AMP AMPERE, AMPS
ARCH ARCHITECT, ARCHITECTURAL
ASHRAE AMERICAN SOCIETY OF HEATING, REFRIGERATION AND AIR CONDITIONING ENGINEERS
ASTM AMERICAN SOCIETY OF TESTING AND MATERIALS

B
BLDG BUILDING
BM BEAM
BOTT BOTTOM
BTU BRITISH THERMAL UNIT
BOF BOTTOM OF FOOTING
BRG BEARING

C
CF CUBIC FEET
CD CONDENSATE
CERTS CERTIFICATES
CFM CUBIC FEET PER MINUTE
CKT CIRCUIT
℄ CENTERLINE
CLG CEILING
CLR CLEAR OR CLEARANCE
CMU CONCRETE MASONRY UNIT
CO CLEANOUT
COL COLUMN
CONC CONCRETE, CONCENTRIC
CONT CONTINUOUS, CONTINUATION
COORD COORDINATE

C (CONTINUED)
CJ CONTROL JOINT
CTR CENTER
CV CHECK VALVE
CW COLD WATER

D
DBL DOUBLE
DC DIRECT CURRENT
DEG DEGREES
DEFS DIRECT-APPLIED EXTERIOR FINISH SYSTEM
DIA DIAMETER
DIM DIMENSION
DL DEADLOAD
DN DOWN
DS DOWNSPOUT
DTL DETAIL
DWGS DRAWINGS

E
EA EACH
EF EXHAUST FAN
EXPANSION JOINT
ELEV ELEVATION
EIFS EXTERIOR INSULATION AND FINISH SYSTEM
ELEC ELECTRICAL
EMBED EMBEDMENT
EMP EMPLOYEE
EMS ENERGY MANAGEMENT SYSTEM
ENCL ENCLOSURE
EOD EDGE OF DECK
EQ EQUAL
EQUIP EQUIPMENT
EXGR EXTERIOR GRADE
EXH EXHAUST
EXP EXPANSION
EXIST EXISTING
EXT EXTERNAL, EXTERIOR
EW EACH WAY
EWC ELECTRIC WATER COOLER

F
FA FIRE ALARM
FACP FIRE ALARM CONTROL PANEL
FCO FLOOR CLEANOUT
FD FIRE DAMPER, FLOOR DRAIN
FIN FINISH (ED)
FIXT FIXTURE
FDN FOUNDATION
FLG FLANGE
FTG FOOTING
FF FINISHED FLOOR
FLR FLOOR
FR FIRE-RETARDANT-TREATED MATERIALS
FRP FIBERGLASS REINFORCED PANEL
FT FOOT, FEET

G
GA GAUGE
GALV GALVANIZED
GC GENERAL CONTRACTOR
GB GRADE BEAM
GWB GYPSUM WALL BOARD
GAB GRADED AGGREGATE BASE
GYP GYPSUM WALL BOARD

H
HGT HEIGHT
HORIZ HORIZONTAL
HP HORSEPOWER OR HIGH POINT
HTR HEATER
HVAC HEATING, VENTILATING AND AIR CONDITIONING

I
ID INSIDE DIAMETER
IE INVERT ELEVATION
INT INTERIOR
IN INCH, INCHES
INSUL INSULATION

J
J-BOX JUNCTION BOX
JT JOINT
JST JOIST

K
k KIPS (1000 LBS)
kV KILOVOLT
kVA KILOVOLT-AMPS
kW KILOWATT
kWH KILOWATT-HOUR

L
LB POUNDS
LF LINEAR FEET
LL LIVE LOAD, LANDLORD
LLH LONG LEG HORIZONTAL
LLV LONG LEG VERTICAL
LONG LONGITUDINAL
LP LOW POINT
LTG LIGHTING
LWC LIGHT WEIGHT CONCRETE
L LENGTH

M
MAX MAXIMUM
MDP MAIN DISTRIBUTION PANEL
MECH MECHANICAL
MEZZ MEZZANINE
MFR MANUFACTURER
MIN MINIMUM
MLO MAIN LUGS ONLY
MO MASONRY OPENING
MSB MAIN SWITCHBOARD
MTD MOUNTED

N
N/A NOT APPLICABLE
NEC NATIONAL ELECTRICAL CODE
NEMA NATIONAL ELECTRICAL MANUFACTURER'S ASSOC.
NF NEAR FACE

N (CONTINUED)
NFPA NATIONAL FIRE PROTECTION ASSOCIATION
NIC NOT IN CONTRACT
NL NIGHT LIGHT
NO NUMBER
NOM NOMINAL
NTS NOT TO SCALE

O
OA OUTSIDE AIR
OC ON CENTER
OCC OCCUPANTS
OF OUTSIDE FACE
OD OUTSIDE DIAMETER
OH OPPOSITE HAND
OPNG OPENING
OSB ORIENTED STRAND BOARD
OSHA OCCUPATIONAL SAFETY AND HEALTH ADMINISTRATION

P
PAR PARALLEL
PC PIECE
PDU POWER DISTRIBUTION UNIT
PH PHASE
PL PLATE
PLBG PLUMBING
PNL PANEL
PIV POST INDICATOR VALVE
PSF POUNDS PER SQUARE FOOT
PVC POLYVINYL CHLORIDE
PWD PLYWOOD

Q
QTY QUANTITY

R
RA RETURN AIR
RAD RADIUS
RCP REFLECTED CEILING PLAN,
RD ROOF DRAIN
RE: REFERENCE, REFER
REINF REINFORCING
REQD REQUIRED
RO ROUGH OPENING
RPM REVOLUTIONS PER MINUTE
RTU ROOFTOP UNIT

S
SCHED SCHEDULED
SD SMOKE DAMPER, STORM DRAIN
SECT SECTION
S SENSOR
SF SQUARE FEET
SHT SHEET
SIM SIMILAR
SHT MTL SHEET METAL
SPEC SPECIFICATION
SQ SQUARE
SS STAINLESS STEEL, SANITARY SEWER
STD STANDARD
STL STEEL
STIFF STIFFENER
STIR STIRRUPS
STRUCT STRUCTURAL
SUSP SUSPENDED
SJ SAW JOINT

T
T&B TOP AND BOTTOM
T/FTG TOP OF FOOTING
TEMP TEMPERATURE
THICK THICKNESS
THRESH THRESHOLD
TO TOP OF
TOJ TOP OF JOIST
TOS TOP OF STEEL

T (CONTINUED)
THRU THROUGH
T THERMOSTAT
TYP TYPICAL
T THICKNESS (STRUCT)
TS TUBULAR STEEL (STRUCT)
TRS TRUSS (STRUCT)

U
UL UNDERWRITERS LABORATORIES, INC.
UON UNLESS OTHERWISE NOTED
UPS UNINTERRUPTIBLE POWER SUPPLY

V
V VOLT
VA VOLT-AMPERE
VERT VERTICAL
VIF VERIFY IN FIELD
VRC VERTICAL RECIPROCATING CONVEYOR
VTR VENT THROUGH ROOF

W
W WIDTH
W/ WITH
W/O WITHOUT
WCO WALL CLEANOUT
WC WATER CLOSET
WD WOOD
WL WIND LOAD
WP WEATHERPROOF
WO WALL OPENING
WWF WELDED WIRE FABRIC
WF WIDE FLANGE (STRUCT)

X
XFMR TRANSFORMER

Y
YD YARD

DEFERRED SUBMITTALS

1. EXTERIOR SIGNAGE.
2. FIRE SPRINKLER / FIRE ALARM PLANS.
3. VERTICAL RECIPROCATING CONVEYOR.
4. LANDSCAPING
5. STORE FIXTURES (INCLUDING LIGHT FIXTURE SUPPORT), SEE 3/A-3.1

SYMBOLS

1.5 — CENTERLINE OF COLUMN
3 / A-5.1 — ELEVATION MARK
23 / A-7.1 — ENLARGED PLAN DETAIL MARK
3 / A-5.1 — SECTION MARK 'SIM' - SIMILAR 'OH' - OPPOSITE HAND

SECRETARY OF THE INTERIOR'S STANDARDS FOR REHABILITATION:

1. A PROPERTY WILL BE USED AS IT WAS HISTORICALLY OR BE GIVEN A NEW USE THAT REQUIRES MINIMAL CHANGE TO ITS DISTINCTIVE MATERIALS, FEATURES, SPACES, AND SPATIAL RELATIONSHIPS.
2. THE HISTORIC CHARACTER OF A PROPERTY WILL BE RETAINED AND PRESERVED. THE REMOVAL OF DISTINCTIVE MATERIALS OR ALTERATION OF FEATURES, SPACES, AND SPATIAL RELATIONSHIPS THAT CHARACTERIZE A PROPERTY WILL BE AVOIDED.
3. EACH PROPERTY WILL BE RECOGNIZED AS A PHYSICAL RECORD OF ITS TIME, PLACE, AND USE. CHANGES THAT CREATE A FALSE SENSE OF HISTORICAL DEVELOPMENT, SUCH AS ADDING CONJECTURAL FEATURES OR ELEMENTS FROM OTHER HISTORIC PROPERTIES, WILL NOT BE UNDERTAKEN.
4. CHANGES TO A PROPERTY THAT HAVE ACQUIRED HISTORIC SIGNIFICANCE IN THEIR OWN RIGHT WILL BE RETAINED AND PRESERVED.
5. DISTINCTIVE MATERIALS, FEATURES, FINISHES, AND CONSTRUCTION TECHNIQUES OR EXAMPLES OF CRAFTSMANSHIP THAT CHARACTERIZE A PROPERTY WILL BE PRESERVED.
6. DETERIORATED HISTORIC FEATURES WILL BE REPAIRED RATHER THAN REPLACED. WHERE THE SEVERITY OF DETERIORATION REQUIRES REPLACEMENT OF A DISTINCTIVE FEATURE, THE NEW FEATURE WILL MATCH THE OLD IN DESIGN, COLOR, TEXTURE, AND, WHERE POSSIBLE, MATERIALS. REPLACEMENT OF MISSING FEATURES WILL BE SUBSTANTIATED BY DOCUMENTARY AND PHYSICAL EVIDENCE.
7. CHEMICAL OR PHYSICAL TREATMENTS, IF APPROPRIATE, WILL BE UNDERTAKEN USING THE GENTLEST MEANS POSSIBLE. TREATMENTS THAT CAUSE DAMAGE TO HISTORIC MATERIALS WILL NOT BE USED.
8. ARCHAEOLOGICAL RESOURCES WILL BE PROTECTED AND PRESERVED IN PLACE. IF SUCH RESOURCES MUST BE DISTURBED, MITIGATION MEASURES WILL BE UNDERTAKEN.
9. NEW ADDITIONS, EXTERIOR ALTERATIONS, OR RELATED NEW CONSTRUCTION WILL NOT DESTROY HISTORIC MATERIALS, FEATURES, AND SPATIAL RELATIONSHIPS THAT CHARACTERIZE THE PROPERTY. THE NEW WORK SHALL BE DIFFERENTIATED FROM THE OLD AND WILL BE COMPATIBLE WITH THE HISTORIC MATERIALS, FEATURES, SIZE, SCALE AND PROPORTION, AND MASSING TO PROTECT THE INTEGRITY OF THE PROPERTY AND ITS ENVIRONMENT.
10. NEW ADDITIONS AND ADJACENT OR RELATED NEW CONSTRUCTION WILL BE UNDERTAKEN IN SUCH A MANNER THAT, IF REMOVED IN THE FUTURE, THE ESSENTIAL FORM AND INTEGRITY OF THE HISTORIC PROPERTY AND ITS ENVIRONMENT WOULD BE UNIMPAIRED.

1/31/2011 10:59:33 AM

GENERAL NOTES

1. CONTRACTORS SHALL NOT SCALE THESE DRAWINGS FOR CONSTRUCTION PURPOSES. IN THE EVENT OF OMISSION OF NECESSARY DIMENSIONS OR INFORMATION, CONTRACTOR SHALL NOTIFY ARCHITECT. FIGURED AND CALCULATED DIMENSION TAKES PRECEDENCE OVER SCALED MEASUREMENTS. DETAILED DRAWINGS AND LARGER SCALE DRAWINGS TAKE PRECEDENCE OVER SMALLER SCALE DRAWINGS. ALL PLAN DETAILS AND WALL SECTIONS ARE ASSUMED TO BE TYPICAL CONDITIONS UNLESS DETAILED OR NOTED OTHERWISE.
2. ALL FINISHED FLOOR ELEVATIONS RE: TO ARCHITECTURAL DRAWINGS ONLY. RE: CIVIL DRAWINGS FOR RELATIONSHIP TO PROJECT BENCHMARK(S).
3. VERIFY ALL DIMENSIONS, CONDITIONS, AND GRADES AT JOB SITE. ALL CONTRACTORS SHALL COORDINATE THEIR WORK WITH OTHER TRADES AND REPORT DISCREPANCIES, PRIOR TO THEIR CONSTRUCTION, TO THE ARCHITECT FOR REVIEW AND CLARIFICATION OR ACTION.
4. VERIFY SIZE, LOCATIONS AND CHARACTERISTICS OF ALL EQUIPMENT TO BE FURNISHED WITH MANUFACTURERS OR SUPPLIERS BEFORE BEGINNING CONSTRUCTION.
5. VERIFY SIZE AND LOCATION OF ALL OPENINGS FOR MECHANICAL AND ELECTRICAL EQUIPMENT AND RELATED WORK WITH CONTRACTORS INVOLVED AND EQUIPMENT TO BE FURNISHED. FOR CONSTRUCTION DETAILS NOT SHOWN, USE THE MANUFACTURER'S STANDARD DETAILS OR APPROVED SHOP DRAWINGS / DATA SHEETS IN ACCORDANCE WITH THE PROJECT SPECIFICATIONS.
6. CEILING HEIGHTS SCHEDULED ON THE ROOM FINISH SCHEDULE OR REFLECTED CEILING PLAN ARE TAKEN FROM THE FINISHED FLOOR ELEVATION.
7. ALL PLAN DIMENSIONS ARE TO FINISHED FACE OF FINISHED WALLS, FACE OF MASONRY, AND CENTERLINE OF COLUMNS, UNLESS NOTED OTHERWISE.
8. VERIFY ALL ELEVATIONS AND DIMENSIONS OF STRUCTURAL ELEMENTS WITH ARCHITECTURAL DRAWINGS. IN CASE OF CONFLICT, NOTIFY ARCHITECT. THE CONTRACTORS SHALL VERIFY ALL DIMENSIONS AND BE RESPONSIBLE FOR THEM. ALL DIMENSIONAL DISCREPANCIES ARE TO BE BROUGHT TO THE ATTENTION OF THE ARCHITECT.
9. ADD SUFFICIENT BLOCKING IN STUD WALLS TO SUPPORT ALL ITEMS OR EQUIPMENT SHOWN OR SPECIFIED TO BE ATTACHED TO THE WALLS. PROVIDE ADDITIONAL STRUCTURAL SUPPORT (ANGLES, CHANNELS, ETC.) WITHIN WALLS WHERE THE WEIGHT OF ATTACHED ITEMS OR EQUIPMENT IS TOO GREAT TO BE SUPPORTED BY METAL STUDS. PROVIDE BLOCKING FOR OWNER FURNISHED OR INSTALLED ITEMS.
10. PARTITIONS WHERE INDICATED BY SYMBOL ARE TO EXTEND AND SEAL AGAINST THE BOTTOM OF THE DECK ABOVE, EXCEPT AS DETAILED WHERE HISTORICAL SURFACES OCCUR.
11. INSTALL METAL TRIM ON ALL GYPSUM BOARD EDGES ABUTTING OTHER MATERIALS OR STOPPING SHORT OF OTHER MATERIALS TO FORM A REVEAL OR RECESS.
12. USE METAL CORNER BEADS ON ALL GYPSUM BOARD EXTERIOR CORNERS.
13. COORDINATE WITH MECHANICAL CONTRACTOR FOR LOCATIONS OF ALL FLOOR DRAINS.
14. ALL PLUMBING WET WALLS (EXCLUDING CHASES) SHALL BE FRAMED WITH 6" METAL STUDS.
15. ALL PRODUCTS UTILIZED IN THIS CONSTRUCTION SHALL BE ASBESTOS FREE.
16. TRANSITION OF DIFFERENT FLOORING MATERIALS AT DOORWAYS SHALL OCCUR AT CENTERLINE OF DOORS TYPICALLY.
17. PAINT ALL WALL SURFACES, DOOR FRAMES, BULKHEADS AND CEILINGS IN ROOMS WHERE INDICATED ON ROOM FINISH SCHEDULE. PAINT BEHIND ALL MOVEABLE ITEMS ADJACENT TO WALLS RECEIVING PAINT AND RELOCATE ITEMS.
18. ALL WEATHER - EXPOSED SURFACES SHALL HAVE A WEATHER RESISTIVE BARRIER TO PROTECT THE INTERIOR WALL COVERING. EXTERIOR OPENINGS SHALL BE FLASHED IN SUCH A MANNER AS TO MAKE THEM WATERPROOF.
19. ALL COMPOSITE WOOD PRODUCTS SUCH AS PLYWOOD AND OSB MUST BE IN COMPLIANT WITH THE CALIFORNIA AIR RESOURCES BOARD (CARB) REGULATIONS ON FORMALDEHYDE EMISSIONS STANDARDS. ALL DOCUMENTATION AND LABELING SHALL BE PROVIDED AS REQUIRED BY THE LATEST CARB REQUIREMENTS.
20. IF ANY OF THE ITEMS, DEEMED IMPORTANT BY THE HISTORICAL ARCHITECT, ARE NOT ADDRESSED IN THE REVISED CDs, THE HISTORICAL ARCHITECT WILL PROVIDE THE LANDMARKS AND RECORDS COMMISSION WITH A LIST OF ITEMS THAT THEY SHOULD REQUIRE BE IMPLEMENTED.

LOCATION MAP

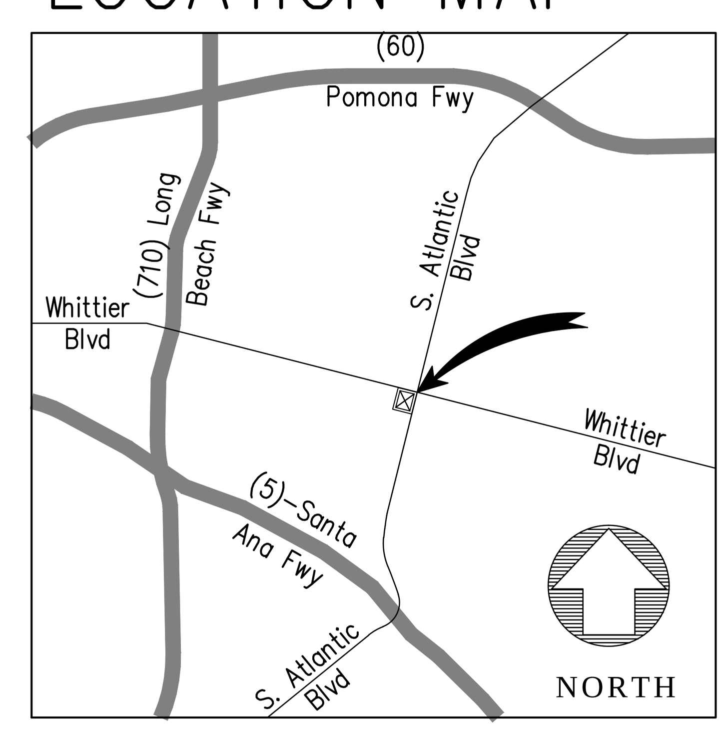

RESPONSIBILITY SCHEDULE (TURNKEY)

Revised: 02/19/09

DIV	DESCRIPTION	LANDLORD GC FURNISH	LANDLORD GC UNLOAD	LANDLORD GC INSTALL	CVS GC FURNISH	CVS GC UNLOAD	CVS GC INSTALL	REMARKS
1	GENERAL RQUIREMENTS							
	1. Permits and Fees	X						Includes building permit & tap fees and winter conditions if applicable and approved by CVS Project Manager and Director of Construction as an allowance.
2	SITE CONSTRUCTION							
	1. Landscaping	X	X	X				
	2. Outdoor Trash Recaptacle	X	X	X				
3	CONCRETE							
	1. Concrete Testing	X						Landlord GC to include concrete testing.
4	MASONRY	X	X	X				
5	METALS	X	X	X				
6	WOOD AND PLASTIC							
	1. Millwork (Includes Cart Corral)		X	X	X			
	2. Carpentry	X	X	X				
7	THERMAL MOISTURE PROTECTION	X	X	X				
8	DOORS AND WINDOWS							
	1. Drive-Thru Window	X	X	X				Landlord GC to provide complete installation of window unt. Coordinate all electrical requirements with vendor. Allow 6-8 weeks from time of order to site delivery. Call CVS National Account vendor for quote. All items are under Landlord GC's contract.
	2. Entrance Doors	X	X	X				Landlord GC to supply/install glass, glazing and perimeter caulking. Allow 6-8 weeks lead from time of order to site delivery/ installation. Call CVS National Account vendor for quote.
	3. Building Security Grilles	X	X	X				High security stores only. Confirm with CVS Project Manager.
	4. Rolling Service Door	X	X	X				Installation by product distributor. Landlord GC to provide metal angle jamb/head rough opening prior to installation. CVS to supply padlock.
	5. RX Dept. Security Grille	X	X	X				Landlord GC to provide necessary structural support. Actual product install is by CVS National Account vendor under Landlords GC's contract.
9	FINISHES							
	1. Carpet Tile	X	X	X				Landlord GC to obtain quote from CVS National Account vendor. Carpet price will include installation and adhesive. CVS responsible for Drive Aisle install through National Account vendor after gondola installation.
	2. VCT	X	X	X				
	3. Wall Covering	X	X	X				
10	SPECIALTIES							
	1. Bulletin Board	X	X	X				
	2. Pylon Signs Electronic Message Board (EMB)				X	X	X	Landlord GC to supply electrical, including conduits for EMB to each pylon per approved town/city site plan. CVS National Account vendor is responsible for foundation, EMB and final electrical connections. All items are under the Landlord GC's contract.
	3. Monument Signs Electronic Message Board (If applicable)				X	X	X	Landlord GC to supply electrical, including conduits for EMB to each monument (if applicable) per approved town/city site plan. CVS National Account vendor is responsible for foundation, EMB and final electrical connections. All items are under the Landlord GC's contract.
	4. Drive-Thru Signs				X	X	X	See Site Plan.
	5. Building Signs				X	X	X	Landlord GC to supply electrical and plywood backing. CVS National Account vendor is responsible for final electrical connections. All items are under the Landlord GC's contract.
	6. Interior Signs				X	X	X	
	7. Fire Extinguishers	X	X	X				
	8. Toilet Accessories	X	X	X				
	9. UNIWEB/ Early Release Lozier				X	X	X	
11	EQUIPMENT							
	1. Safe				X	X	X	
	2. Compactor	X	X	X				Landlord GC to furnish and install compactor door and frame for thru-wall chute, mag-switch and start/stop station.
	3. Compactor Pad/ Enclosure	X		X				
	4. Dumpster				X	X	X	
	5. Dumpster Pad/ Enclosure	X		X				
	6. Walk-In Cooler	X	X	X				Landlord GC to purchase from CVS National Account vendor.
	7. Refrigerators/Freezers				X	X	X	Electrical outlet by Landlord GC. CVS to provide/ CVS vendor to install.
12	FURNISHINGS							
	1. Steel Gondola				X	X	X	Note: Install is dictated by local labor union issues. In union areas the Landlord's GC is responsible for the install. In non-union areas, CVS Store Set-up is responsible. There are exceptions therefore please confirm with CVS Project Manager. See merchandise plan.
	2. Wall Strapping	X	X	X				Landlord GC to provide wall strapping along perimeter walls per CVS merchandise plan.
13	SPECIAL CONSTRUCTION							
	1. Fire Alarm	X	X	X				Landlord GC to purchase from CVS National Account vendor.
14	CONVEYING SYSTEMS							
	1. Vertical Lift or Conveyor Unit	X	X	X				
	2. Pneumatic Tube Delivery System	X	X	X				Installed by CVS National Account vendor. Under Landlord's GC contract.
15	MECHANICAL/ PLUMBING							
	1. Water Meter	X	X	X				Includes tap fees.
	2. Irrigation Meter	X	X	X				Includes tap fees.
	3. Gas Meter	X	X	X				Includes tap fees.
	4. Water Purification System	X	X	X				Landlord GC to purchase from CVS National Account vendor.
16	ELECTRICAL							
	1. Site Lighting	X	X	X				Landlord GC to purchase from CVS National Account vendor. Includes poles, fixtures and circuiting.
	2. Building Lighting	X	X	X				Landlord GC to purchase from CVS National Account vendor. Includes interior and exterior lighting.
	3. Compactor Disconnect	X	X	X				Coordinate with compator location.
	4. EAS and POS Cabling	X	X	X				Landlord GC to purchase from CVS National Account vendor. CVS to connect equipement. All conduit by Landlord GC.
	5. Telephone Conduit	X	X	X				All conduit by Landlord GC from street to building with pull string rquirements from telephone company. Landlord GC to install plywood backer board in electrical area per CVS construction plans. CVS to order phone service.
	6. Telephone System				X	X	X	CVS to connect to equipment. All conduit by Landlord GC.
	7. EMS Relay Panel	X	X	X				Landlord GC to purchase from CVS National Account vendor. Landlord GC to install cabinet.
	8. Pylon/ Monument Signs				X	X	X	Landlord GC to supply electrical. CVS National Account vendor is responsible for foundation and final electrical connections. All items are under the Landlord's GC contract.
	9. Drive-Thru Signs				X	X	X	
	10. Building Signs				X	X	X	Landlord GC to supply electrical and plywood backing. CVS National Account vendor is responsible for final electrical connections. All items are under the Landlord's GC contract.
	11. EMS System Connection	X	X	X				Landlord GC to purchase from CVS National Account vendor. Landlord GC to install relay panel. Final programming by CVS.
	12. Switchgear and Disconnects	X	X	X				Landlord GC to purchase from CVS National Account vendor. Main contactor connections and installation by Landlord GC.
	13. Electrical Meter	X	X	X				
	14. Burglar Alarm/ CCTV	X	X	X				Landlord GC to purchase from CVS National Account vendor. Landlord GC to furnish all conduits/ outlets.

ROBERT KUBICEK Architects And Associates, Inc.
18662 MacArthur Blvd. Ste.200
Irvine, California 92612
(949) 798-3838
www.rkaa.com

LICENSED ARCHITECT CRAIG JOHNSON NO. C12434 STATE OF CALIFORNIA

COPYRIGHT 2011, ALL RIGHTS RESERVED. ROBERT KUBICEK ARCHITECTS AND ASSOC, INC. THIS DRAWING IS AN INSTRUMENT OF SERVICE. IT IS THE PROPERTY OF ROBERT KUBICEK ARCHITECTS AND ASSOC, INC. AND MAY NOT BE REPRODUCED, OR REPRODUCTION HERE OF USED, WITHOUT WRITTEN PERMISSION OF THE ARCHITECT.

date:	
10/4/10	Bldg. Dept. Submittal
10/15/10	Health Dept. Submittal
1/6/11	Chattel Architecture Submittal
1/27/11	Chattel Architecture Submittal

NOTICE OF ALTERNATE BILLING OR PAYMENT CYCLE: THIS CONTRACT MAY ALLOW THE OWNER TO REQUIRE THE SUBMISSION OF BILLINGS OR ESTIMATES IN BILLING CYCLES OTHER THAN THIRTY DAYS. THIS CONTRACT MAY ALLOW THE OWNER TO MAKE PAYMENT ON SOME ALTERNATIVE SCHEDULE AFTER CERTIFICATION AND APPROVAL OF BILLING AND ESTIMATES. A WRITTEN DESCRIPTION OF SUCH OTHER BILLING AND/OR CYCLE APPLICABLE TO THE PROJECT IS AVAILABLE FROM THE OWNER AT THE OFFICES OF

OR HIS DESIGNATED AGENT SHALL PROVIDE THIS WRITTEN DESCRIPTION ON REQUEST

DEVELOPER:
CHARLES COMPANY
9034 W. SUNSET BLVD.
WEST HOLLYWOOD
CA 90069
TEL (310) 247-0900
FAX (310) 247-1525

CVS pharmacy
STORE #4524
909 S. ATLANTIC BLVD
LOS ANGELES, CA

design RKA
drawn RKA
check RKA

sheet CS
of
job 09151

CONDITIONS OF APPROVAL
CONDITIONAL USE PERMIT NO. 2008-00136-(1)

1. This grant authorizes the sale of alcoholic beverages for off-site consumption and a drive-through pharmacy window at a proposed retail pharmacy, subject to the following conditions of approval.
2. Unless otherwise apparent from the context, the term "permittee" shall include the applicant and any other person, corporation, or other entity making use of this grant.
3. Thi gra t hall t be e e ti e r a purp e u le a d u til the permittee, a d the er the ub e t pr pert i ther tha the permittee, ha e iled at the i e the L A gele C u t ("C u t ") Departme t Regional Planning ("Regional Planning") their affidavit stating that they are aware of, and agree to accept, all the conditions of this grant and that the conditions of the grant have been recorded as required by Condition N . 7, a d u til all re uired m ie ha e bee paid pur ua t t C diti N . 10 a d 12. N t ith ta di g the reg i g, thi C diti N . 3 a d C diti N . 4 a d 5 hall be e e ti e immediatel up i al appr al of this grant by the County. The recorded affidavit shall be filed and the required monies shall be paid within three days of the approval of this grant.
4. The permittee shall defend, indemnify, and hold harmless the County, its agents, officers, and employees from any claim, action, or proceeding against the County or its agents, officers, or employees to attack, set aside, id, r a ul thi permit appr al, hi h a ti i br ught ithi the appli able time peri d e ti 65009 the Cali r ia G er me t C de r a ther appli able limitati peri d. The C u t hall pr mptl ti the permittee of any claim, action, or proceeding and the County shall reasonably cooperate in the defense. If the County fails to promptly notify the permittee of any claim, action, or proceeding, or if the County fails to reasonably cooperate in the defense, the permittee shall not thereafter be responsible to defend, indemnify, or hold harmless the County.
5. I the e e t that a laim, a ti , r pr eedi g a de ribed ab e i iled agai t the C u t , the permittee hall ithi 10 da the ili g pa Regi al Pla i g a i itial dep it $5,000, r m hi h a tual t shall be billed and deducted for the purpose of defraying the expenses involved in Regional Planning's cooperation in the defense, including, but not limited to, depositions, testimony, and other assistance to the permittee or permittee's counsel. The permittee shall also pay the following supplemental deposits, from which actual costs shall be billed and deducted:
   a. I duri g the litigati pr e , a tual t i urred rea h 80 per e t the am u t dep it, the permittee hall dep it additi al u d u i ie t t bri g the bala e up t the am u t the i itial dep it. There i no limit to the number of supplemental deposits that may be required prior to completion of the litigation; and
   b. At the sole discretion of the permittee, the amount of an initial or supplemental deposit may exceed the minimum amounts defined herein.

   The t r lle ti a d dupli ati re rd a d ther related d ume t hall be paid b the permittee i a rda e ith e ti 2.170.010 the L A gele C u t C de ("C u t C de").
6. If any provision of this grant is held or declared to be invalid by a court of competent jurisdiction, the permit shall be void and the privileges granted hereunder shall lapse.
7. Prior to the use of this grant, the terms and conditions of the grant shall be recorded in the office of the County Registrar-Recorder/County Clerk. In addition, upon any transfer or lease of the subject property during the term of this grant, the permittee shall promptly provide a copy of the grant and its terms and conditions to the transferee or lessee, as applicable, of the subject property. Upon recordation, an official copy of the recorded conditions shall be provided to the Director of Regional Planning ("Director").
8. **This grant will terminate on July 20, 2030**, u le re e ed b the Dire t r r e additi al peri d 10 ear , t t ex eed a t tal gra t term 30 ear , up the permittee re ue t made i a rda e ith the pr edure et rth i Part 12 Chapter 22.56 the C u t C de a d ti i ati per ub e ti A.10. e ti 22.56.030 the C u t C de. A re ue t r Dire t r Re ie mu t be made at lea t ix m th be re the expiration date. Entitlement to use of the property thereafter shall be subject to the regulations then in effect. At least six months prior to the expiration of this permit and in the event that the permittee intends to continue operations after such date, a new conditional use permit ("CUP") application shall be filed with Regional Planning. The application shall be a request for continuance of the use permitted under this grant, whether or not it includes a modification to the use at that time.
9. This grant shall expire unless used within two years from the date of final approval by the County. The date of final approval is the date of the approval action. A single one-year time extension may be requested in writing and with the payment of the applicable fee prior to such expiration date.
10. The property shall be maintained and operated in full compliance with the conditions of this grant and any law, statute, ordinance, or other regulation applicable to any development or activity on the property. Failure of the permittee to cease any development or activity not in full compliance shall be a violation of these conditions. The permittee shall deposit with the County the sum of $4,000.00. The deposit shall be placed in a performance fund, which shall be used exclusively to compensate Regional Planning for all expenses incurred while inspecting the premises to determine the permittee's compliance with the conditions of approval. The dep it pr ide r 20 bie ial (e e er other year) inspections. Inspections shall be unannounced.
11. If additional inspections are required to ensure compliance with the conditions of this grant, or if any inspection discloses that the property is being used in violation of any one of the conditions of this grant, the permittee shall be financially responsible and shall reimburse Regional Planning for all additional enforcement efforts necessary to bring the property into compliance. Inspections shall be made to ensure compliance with the conditions of this grant as well as adherence to development in accordance with the approved site plan on file at Regional Planning. The amount charged for additional inspections shall be $200 per inspection, or the current recovery cost, whichever is greater.
12. Within three days of the approval date of this grant, the permittee shall remit processing fees payable to the County in connection with the filing and posting of a Notice of Determination for this project and its entitlements i mplia e ith e ti 21152 the Cali r ia Publi Re ur e C de. U le a Certi i ate Exempti i i ued b the Cali r ia Departme t Fi h a d Game pur ua t t e ti 711.4 the Fi h a d Game C de, the following applicable fee required is $2,867.25 ($2,792.25 r a E ir me tal Impa t Rep rt plu $75 pr e i g ee). N la d u e pr e t ub e t t thi re uireme t i al, e ted, r perati e u til the ee i paid.
13. Notice is hereby given that any person violating a provision of this grant is guilty of a misdemeanor. Notice is further given that the County Regional Planning Commission or a County Hearing Officer may, after conducting a public hearing, revoke or modify this grant if it is found that these conditions have been violated, or that this grant has been exercised so as to be detrimental to the public health, safety, or so as to be a nuisance.
14. Upon approval of this grant, the permittee shall contact the Fire Prevention Bureau of the County Fire Department to determine what facilities may be necessary to protect the property from fire hazard. Any necessary facilities including, but not limited to, water mains, fire hydrants, and fire flow facilities, shall be provided to the satisfaction of and within the time periods established by said department.
15. All requirements of Title 22 of the County Code (Zoning Ordinance) and of the specific zoning of the property must be complied with unless otherwise set forth in these conditions or shown on the approved plans.
16. The subject property shall be developed and maintained in substantial compliance with the plans marked Exhibit "A." In the event that subsequent revised plans are submitted, the permittee shall submit three copies of the proposed plans to the Director for review and approval. All revised plans must be accompanied by the written authorization of the property owner.
17. All structures in the development shall comply with the requirements of the Division of Building and Safety of the County Department of Public Works.
18. The permittee shall maintain the property in a neat and orderly fashion. The permittee shall maintain free of litter all areas on the premises over which the permittee has control.
19. All landscaped areas shall be continuously and properly maintained in good condition.
20. A la d ape pla hall be ubmitted t Regi al Pla i g r re ie ithi 60 da the date appr al r the CUP that mplie ith the re uireme t the Ea t L.A. C mmu it Sta dard Di tri t.
21. All structures, walls, and fences open to public view shall remain free of extraneous markings, drawings, or signage. These shall include any of the above that do not directly relate to the business being operated on the premises or that do not provide pertinent information about said premises. The only exceptions shall be seasonal decorations or signage provided under the auspices of a civic or non-profit organization.
22. I the e e t gra iti r ther extra e u mar i g urri g, the permittee hall rem e r er aid mar i g , dra i g , r ig age ithi 24 h ur u h urre e, eather permitti g. Pai t utili ed i eri g such markings shall be of a color that matches, as closely as possible, the color of the adjacent surfaces. The only exceptions shall be seasonal decorations or signage provided under the auspices of a civic or non-profit organization.
23. Any sign to be located on the property is subject to a separate sign review that shall be filed with Regional Planning for review and approval. This CUP provides no exemptions to Title 22 of the County Code sign provisions, except for the re-use of the former Jim's Burgers sign, which is a legal non-conforming sign.
24. The placement of portable signs on sidewalks adjacent to the property and temporary signs on walls and poles is prohibited. No outdoor sales, storage, or display of merchandise is allowed.
25. All regulations of the State of California prohibiting the sale of alcoholic beverages to minors shall be strictly enforced.
26. The permittee is required to purchase for its use or to retire an existing alcohol license in the area as a condition to the issuance of the certificate of occupancy for the building. If at the time of occupancy, despite evidence provided to the Director of best efforts, the permittee requires additional time, the permittee may request additional time in writing from the Director. The Director will have the discretion to allow occupancy and grant time to purchase the required license.
27. The permittee shall abide by all requirements, licensing or otherwise, established for the sale of alcoholic beverages by the California State Department of Alcoholic Beverage Control ("ABC").
28. The hel pa e de ted t the ale al h li be erage hall be limited t t m re tha i e per e t the t tal hel pa e i the e tabli hme t, a d ithi 90 da appr al, the permittee hall ubmit a hel pla depicting the area for sale of alcohol identified as Exhibit "B."
29. The permittee hall di pla al h li be erage l i the ler r hel i g de ig ated r t rage aid be erage a depi ted the " hel pla " labeled Exhibit "B." N additi al di pla al h li be erage hall be provided elsewhere on the premises.
30. There shall be no beer sold in single containers less than one quart or in less than six-pack quantities if less than one quart size containers.
31. The consumption of alcoholic beverages shall be prohibited on the property. The permittee shall post signage on the premises prohibiting consumption of alcoholic beverages on the premises.
32. There shall be no loitering permitted on the premises under the control of the permittee. Signage shall be posted on the premises prohibiting loitering.
33. The pharmacy proposed for the property may operate 24 hours per day. All alcohol sales, however, shall be limited to the hours of 9:00 a.m. to 10:00 p.m. during all days of operation.
34. All employees authorized to sell alcoholic beverages shall participate in the License Education on Alcohol and Drugs (LEAD) Program offered by ABC. This training shall be ongoing and all new employees shall be required to attend. The permittee shall display a certificate or plaque in the lobby of the establishment indicating its participation in this program.
35. Exterior security cameras shall be installed to provide coverage of all entrances and exits. A video recording shall be made and retained for a period of at least two weeks.
36. The permittee shall provide adequate lighting above all entrances and exits to the premises. The lighting shall be of sufficient power to illuminate and make easily discernable the appearance and conduct of all persons entering or exiting the premises during operating hours and shall be designed to direct light and glare only onto the facility premises. Said lighting and glare shall be deflected, shaded, and focused away from all adjoining properties.
37. The permittee shall hire a security guard for the premises and the security guard shall be required to be on the premises during all hours of operation.
38. A mi imum 41 par i g pa e hall be mai tai ed ite, three hi h mu t be r ha di ap par i g. The re uired par i g pa e hall be ti u u l a ailable r ehi ular par i g l a d hall t be u ed r storage, automobile repair, or any other unauthorized use.
39. All parking lot lighting and other exterior lighting shall be hooded and directed away from neighboring residences to prevent direct illumination and glare, and shall be turned off within 30 minutes after conclusion of activities, with the exception of sensor-activated security lights and/or low level lighting along all pedestrian walkways leading to and from the parking lot.
40. The conditions of this grant shall be retained on the premises at all times and be immediately produced upon request of any County Sheriff, Zoning Inspector, or ABC. The manager and all employees of the facility shall be knowledgeable of the conditions herein.
41. The permittee shall comply with all mitigation measures identified in the attached Mitigation Monitoring and Reporting Program ("MMRP").
42. The permittee hall dep it the um $3,000.00 ith Regi al Pla i g ithi 30 da permit appr al i rder t de ra the t re ie i g a d eri i g the i rmati tai ed i the rep rt re uired b the MMRP.
43. The permittee shall abide by the following conditions related to the renovation of the former Golden Gate Theater:
   a. The term "stabilized" shall mean "the act or process of applying measures designed to re-establish a weather resistant enclosure and the structural stability of an unsafe or deteriorated property while maintaining the essential form as it exists at present" (Stabilization Treatment Standard, The Secretary of the Interior's Standards for the Treatment of Historic Properties, 1983).
   b. The term "conserved" shall mean "preservation from loss, depletion, waste, or harm" (Martin E. Weaver. *Conserving Buildings: A Guide to Techniques and Materials*. New York: John Wiley & Sons, Inc., 1993).
   c. References to "Gridlines" shall refer to the gridlines depicted on the floor plan marked Exhibit "C."
   d. At lea t 75 per e t the a ailable eili g pa e i ti g the rigi al l bb eili g l ated bet ee Gridli e G-J a d Gridli e 1-6, the rigi al u der ide the bal eili g l ated bet ee Gridli e C-F a d Gridli e 1-6, a d the rigi al audit rium eili g l ated bet ee Gridli e B-D a d Gridli e 1-6, hall remai exp ed. Thi diti re uire ea h the ide ti ied, a ailable eili g pa e t remai 75 per e t exposed. For purposes of this condition, "available ceiling space" shall mean the historic, decorative coffered portion of the ceiling with allowance for existing and new penetrations to account for building systems. Treatment of the underside of the lobby ceiling, the underside of the balcony ceiling, and the original auditorium ceiling shall include painting, and exposed original gold ornamentation shall be stabilized and conserved.
   e. Four extant lighting fixtures mounted at the underside of the balcony ceiling shall be retained and used to provide lighting, if feasible, or if not feasible shall be retained for decorative purposes; however, the lighting fixtures may be moved within the underside of the balcony to provide visual balance. New florescent fixtures shall be designed so as not to detract from the historic elements.
   f. The original walls in the lobby and underside of the balcony area located between Gridlines C-J and Gridlines 1-6, shall be encapsulated behind new partition walls containing some of the tenant's retail display units, shelving, and lighting.
   g. Ne partiti all e ap ulati g the rigi al audit rium all bet ee Gridli e B-C a d Gridli e 1-6 hall t ex eed 10 eet i height. Ne partiti all hall tai me the te a t retail di pla u it , hel i g, a d lighti g. Te a t graphi di pla hall be permitted up t 15 eet i height. The rigi al audit rium all hall be exp ed ab e the e partiti all a d te a t graphi di pla . The p rti the pr e ium ar h ab e 10 eet i height a d the leadi g edge the bal hall be exp ed. The r ame t urr u di g the t al e bal ie la i g the pr e ium ar h l ated mid a bet ee Gridli e B-C a d bet ee Gridli e 1-2 a d bet ee Gridli e 5-6 hall be at lea t 75 per e t exp ed. Treatme t the exp ed all hall i lude pai ti g, a d exp ed rigi al g ld r ame tati hall be tabili ed a d conserved.
   h. The four existing lighting fixtures mounted at the underside of the balcony ceiling shall be retained in place or crated and stored on site. A minimum of one lighting fixture shall be included in the renovated interior and remain visible to the public. This fixture need not be kept in its original location.
   i. The lobby concession shell shall be crated and stored on site.
   j. The original auditorium floor shall be leveled in a reversible manner.
   k. The mezzanine shall be encapsulated.
   l. Original materials to be stored on site shall be inventoried and stored in the mezzanine or balcony. The inventory of all stored materials shall remain in the mezzanine storage area, and a copy shall remain on file at Regional Planning. The inventory shall include instructions stating that the original materials shall not be discarded. Storage crates shall be clearly marked "do not discard" or similar language to indicate that the stored items shall not be discarded.
   m. The balcony and mezzanine shall be mothballed according to guidance provided by the National Park Service in *Preservation Brief 31: Mothballing Historic Building*, which includes three major actions: documentation, stabilization, and mothballing. Access to the mezzanine and balcony shall be provided by an exterior staircase.
   n. The te a t hall i rp rate a mi imum ix hi t ri ph t graph a d pa el i t the i teri r de ig that are at lea t 16-i h x 20-i h.

HISTORIC PRESERVATION CONDITIONS OF APPROVAL

18662 MacArthur Blvd.
Ste.200
Irvine, California 92612
(949) 798-3838
www.rkaa.com

ROBERT KUBICEK
Architects And Associates, Inc.

LICENSED ARCHITECT
CRAIG JOHNSON
NO. C12434
STATE OF CALIFORNIA

COPYRIGHT 2011 , ALL RIGHTS RESERVED. ROBERT KUBICEK ARCHITECTS AND ASSOC, INC. THIS DRAWING IS AN INSTRUMENT OF SERVICE. IT IS THE PROPERTY OF ROBERT KUBICEK ARCHITECTS AND ASSOC, INC. AND MAY NOT BE REPRODUCED, OR REPRODUCTION HERE OF USED, WITHOUT WRITTEN PERMISSION OF THE ARCHITECT.

date:	
10/4/10	Bldg. Dept. Submittal
10/15/10	Health Dept. Submittal
1/6/11	Chattel Architecture Submittal
1/27/11	Chattel Architecture Submittal

NOTICE OF ALTERNATE BILLING OR PAYMENT CYCLE: THIS CONTRACT MAY ALLOW THE OWNER TO REQUIRE THE SUBMISSION OF BILLINGS OR ESTIMATES IN BILLING CYCLES OTHER THAN THIRTY DAYS. THIS CONTRACT MAY ALLOW THE OWNER TO MAKE PAYMENT ON SOME ALTERNATIVE SCHEDULE AFTER CERTIFICATION AND APPROVAL OF BILLING AND ESTIMATES. A WRITTEN DESCRIPTION OF SUCH OTHER BILLING AND/OR CYCLE APPLICABLE TO THE PROJECT IS AVAILABLE FROM THE OWNER AT THE OFFICES OF

OR HIS DESIGNATED AGENT SHALL PROVIDE THIS WRITTEN DESCRIPTION ON REQUEST

DEVELOPER:
CHARLES COMPANY
9034 W. SUNSET BLVD.
WEST HOLLYWOOD
CA 90069
TEL (310) 247-0900
FAX (310) 247-1525

CVS pharmacy
STORE #4524
909 S. ATLANTIC BLVD
LOS ANGELES, CA

design RKA
drawn RKA
check RKA

sheet HMM-1
of
job 09151

Golden Gate Theater Re-Use Project
909 & 933 S. Atlantic Boulevard/Project No. RCUPT200800136/Environmentaql Review No. RENVT200500198
Mitigation Monitoring Program

Mitigation Measure	Responsible Agency or Party	Action Required	Monitoring Agency or Party	Timing
Aesthetics				
Mitigation Measure 3.1.1: Building security lighting and parking lot lighting shall be designed so that no substantial light or glare would impact nighttime views of the surrounding area.	Project Applicant	Design building and security lighting so that no substantial light or glare would impact nighttime views of the surrounding area.	Los Angeles County Department of Public Works and Los Angeles County Department of Regional Planning	During construction and Project lifetime
Mitigation Measure 3.1.2: Lighting shall be directed downward and inward to the greatest extent possible in order to limit lighting impacts, yet provide for adequate safety and security for building occupants and visitors.	Project Applicant	Direct lighting downward and inward to limit lighting impacts, yet provide adequate safety and security for building occupants and visitors.	Los Angeles County Department of Public Works and Los Angeles County Department of Regional Planning	During construction and Project lifetime
Mitigation Measure 3.1.3: Lighting design features that would reduce light and glare impacts shall be incorporated into the final project design. These features include the use of low wattage bulbs with prismatic glass coverings that inhibit the spread of light and the sheilding of lights to reduce glare such that neither the light source nor its image from a feflective surface is directly visible from any point measured five feet from the property line.	Project Applicant	Incorporate lighting design features that would reduce light and glare impacts including the use of low wattage bulbs and prismatic glass coverings on exterior light fixtures.	Los Angeles County Department of Public Works and Los Angeles County Department of Regional Planning	During construction and Project lifetime
Aesthetics				
Mitigation Measure 3.2.1: Maintenance, repair, stabilizaton, restoration, preservation, and conservation of all of the exterior and certain elements of the interior of the Golden Gate Theater Building shall be conducted in a manner consistent with the Rehabilitation Standards of the Secretary of the Interior's Standards for Treatment of Historic Properties with Guidelines for Preserving, Rehabilitating, Restoring and Reconstructing Historic Buildings (Secretary's Standards, 1995), Weeks and Grimmer, as set forth in the Final EIR. Prior to the issuance of a building permit and to the satisfaction of the Los Angeles County Department of Regional Planning (DRP), the project developer shall retain a qualified professional architectural historian to prepare a Secretary's Standards conformance report, and oversee and advise on the rehabilitation of the Golden Gate Theater Building. Supervision will include activities relating to materials selection, construction methods, and aesthetic and physical exterior and interior alterations that are to be utilized, and the manner in which they are to be employed in rehabilitation of the historical resource. At a minimum, the project shall retain key elements essential to theater function, as set forth in the Final EIR. The design development plans shall be reviewed with the California Historical Building Code (CHBC, Part 8 of Title 24) provisions for compliance to the best reasonable extent.	Project Applicant	Hire a proffessional architectural historian to oversee and advise on the rehabilitation plan, and review the design development plans against the State Historical Building Code for compliance to the maximum extent possible.	Los Angeles County Department of Regional Planning	Prior to issuance of building permit
Mitigation Measure 3.2.2: The Los Angeles County Historical Landmards and Records Commission shall review and approve the disign development plans for consistency of the maintenance, repair, stabilization, restoration, preservation and conservation of the exterior and certain elements of the Golden Gate Theater Building as noted in Mitigation Measure 3.2.1 with the Secretary of the Interior's Standards for Rehabilitation.	Project Applicant	Obtain approval of the design development plans from the Los Angeles County Historical Landmarks Commission	Los Angeles County Department of Regional Planning and Los Angeles County Historical Landmarks Commission	Prior to issuance of building permit
Mitigation Measure 3.2.3: Historic American Building Survey" (HABS) documentation shall be prepared to the satisfaction of the DRP. Such a procedure involves the recording of structure through a written report and large-format photographs. The documentation would be completed on standardized forms and would be accurate in detail to such an extent that after alteration, the structure could be restored/reconstructed from the survey data: Copies of the documents shall be filed with the appropriate State (State of California, Office of Historic Preservation) and local repositories (Los Angeles County Central Library).	Project Applicant	Submit a Historic American Building Survey for approval by Los Angeles County Department of Regional Planning; the survey shall be filed once approved	Los Angeles County Department of Regional Planning, State of California Office of Historic Preservation, and Los Angeles County Central Library	Prior to issuance of building permit
Mitigation Measure 3.2.4: All repair and cleaning work on architecturally of historically significant features shall be conducted according to the design development plans and specifications prepared by a qualified preservation architect to the satisfaction of the Department of Regional Planning. In addition, the repair and cleaning work shall be conducted by a contractor experienced and qualified in the repair or cleaning of such features as ornamental plaster and iron work.	Project Applicant	Have design development plans and specifications prepared by a qualified preservation architect. Hire an experienced and qualified contractor to repair or clean any of the historically signficant features.	Los Angeles County Department of Public Works and Los Angeles County Department of Regional Planning	Prior to issuance of building permit and during construction
Mitigation Measure 3.2.5: A Secretary's Standards conformance report shall be prepared by a qualified professional architectural historian identified in Mitigation Measure 3.2.1 to evaluate the design development plans of the modified project design for conformance with the Secretary of the Interior's Standards for Treatment of Historical Properties noted in Mitigation Measure 3.2.1 The design development plans shall include, but are not limited to, the following: • A study of options to minimize the number of attachments necessary to connect banner signage to the building exterior if any banner signage is proposed. • A study on the feasibility of heating and cooling the high volume auditorium space. A range of options for treatment of the high volume auditorium space between the balcony edge and stage shall be evaluated based on specific needs of the tenant, with the goal of exposing the volume of the space and decorative ceiling and walls to the maximum extent feasible. In addition, cleaning of the attic space between the historic ceiling and the roof of the auditorium shall be studied and the treatment of this issue may factor into the ability to expose all or certain portions of the historic ceiling. • A study of a range of options for treatment of the new wall to emphasize the stage space. It may be painted in *tromp l'oeil* fashion to mimic a partially drawn-up stage curtain or will otherwise be finished in a fashion emphasizing the stage area. • A range of options for treatment of the coffered underside of the balcony shall be evaluated based on specific needs of the tenant. A suspended grid system incorporation light fixtures without acoustical ceiling tiles (exposing the underside of the balcony) shall be considered. • Further consideration on the retention rather than removal of the exiting fire escape stair on the east elevation. • Selection of paint color choices for the building exterior based on tenant needs and recommendations provided by the qualified architectural historian identified in Mitigation Measure 3.2.1	Project Applicant	Minimize the number of attachments necessary to connect banner signage to the building; Expose as much volume of space in the auditorium area between the the balcony and edge of the stage as reasonably possible; treat the walls to emphasize the stage space; expose the coffered underside of the balcony as reasonably possible; retain the fire escape stairs if possible; paint the building the color recommended by the qualified architectural historian; conduct required studies	Los Angeles County Department of Regional Planning and Los Angeles County Historical Landmarks Commission	Prior to issuance of building permit
Mitigation Measure 3.2.6: The decorative features, including ornament and openings on the north elevation shall be retained and shall be cleaned and maintained with gentlest means possible at less than 400 psi, to be determined after inspection and recommendation by a qualified masonry restoration specialist.	Project Applicant	Clean and maintain the exterior of the building using the gentlest means possible	Los Angeles County Department of Regional Planning	During construction and Project Operation
Mitigation Measure 3.2.7: Detailed, hand measured drawings and selective templates prepared by a qualified preservation architect shall be made of the lobby stair for possible future reconstruction.	Project Applicant	Provide hand measured drawings of the lobby stair.	Los Angeles County Department of Regional Planning	Prior to issuance of building permit
Mitigation Measure 3.2.8: Alterations to the Golden Gate Theater building (interior or exterior) shall be prohibited until a tenant has signed a lease.	Project Applicant	Submit a signed lease by the tenant prior to any alterations to the building being conducted.	Los Angeles County Department of Regional Planning	Prior to issuance of building permit
Solid Waste				
Mitigation Measure 3.3.1: The project shall implement a recycling program for the diversion of recyclable cardboard packaging materials. The program will entail the separation of eligible materials from its solid waste stream for transfer to and re-use by recycling entities.	Project Applicant	Implement a recycling program	Los Angeles County Department of Public Works	Occupancy
Mitigation Measure 3.3.2: The project shall provide recycling bins to promote recycling of paper, metal, glass, and other recyclable materials.	Project Applicant	provide recycling bins on the site.	Los Angeles County Department of Public Works	During Occupancy
Mitigation Measure 3.3.2: - The project shall comply with Chapter 20.87 of the Los Angeles County Code requiring that a minimum of 50% of the construction and demolition debris generated by the proposed project be recycled or reused. A Construction and Demolition Debris Recycling and Reuse Plan shall be filed with the Los Angeles County Department of Public Works and an approval shall be obtained in conformance with the County Code requirements. Recycling and reuse of the construction and demolition debris shall be performed in accordance with the approved plan, and the requisite Progress Report Form(s), Final Compliance Report Form, and any required Recycling and Reuse Amendment Forms shall be submitted as required.	Project Applicant	Prepare a recycling and Reuse plan that requires 50% of the demolition and construction debris to be recycled.	Los Angeles County Department of Public Works	During Construction
Mitigation Measure 3.3.4: The proposed re-opening of the Jim's Burgers building as a restaurant shall require provision of a grease treatment device and shall be subject to review and approval by the County Department of Public Works.	Project Applicant	Install a grease treatment device.	Los Angeles County Department of Public Works	During Construction
Mitigation Measure 3.3.5: Should any operation within the subject project include the construction, installation, modification, or removal of underground storage tanks, industrial waste treatment or disposal facilities, and/or storm water treatment facilities, Public Works' Environmental Programs Division shall be contacted for required approvals and operating permits	Project Applicant	Obtain approval and operating permits if required	Los Angeles County Department of Public Works	During Construction
Traffic				
Mitigation Measure 3.4.1: The eastbound approach of Whittier Boulevard to Atlantic Boulevard, adjacent to the site shall be widened to provide an eastbound right-turn lane to the satisfaction of the Los Angeles County Department of Public Works. The new lane shall be 100 feet in length, measured from the existing crosswalk/limit line. A 60 foot long transition shall connect the new, widened curb to the existing curb in front of the new commercial development to the west of the pharmacy site. The right-turn lane shall be 12 feet wide and the two straight lanes adjacent to it shall each be widened by re-striping from 10 feet to 11 feet.	Project Applicant	Obtain approval and operating permits if required	Los Angeles County Department of Public Works	During Construction
Mitigation Measure 3.4.2: In order to maintain the existing sidewalk width of 15 feet, the project developer shall dedicate a width of approximately six feet along the entire Whittier Boulevard frontage of the drug store site.	Project Applicant	Dedicate 6 feet along Whittier Boulevard.	Los Angeles County Department of Public Works	Prior to issuance of grading or building permit
Mitigation Measure 3.4.3: All truck traffic associated with project construction shall utilize Atlantic Boulevard or any other acceptable haul route for access to and from the project site to the satisfaction of the Los Angeles County Department of Public Works.	Project Applicant	All truck traffic during construction shall use Atlantic Boulevard..	Los Angeles County Department of Public Works	During Construction
Mitigation Measure 3.4.4: Prior to the issuance of grading or building permits, the following items shall be submitted to the Los Angeles County Department of Public Works, Traffic and Lighting Division for review and approval: 1) Detailed striping and traffic signal plans for the proposed mitigation measures. The plans shall include any necessary modifications to the existing photo red light system at the intersection of Atlantic Boulevard at Whittier Boulevard. 2) A 40-foot-scale site plan of the project showing site access locations, interior circulation, parking, adjacent intersections/driveways, and opposite driveways along the project site.	Project Applicant	Submittal and approval of striping and traffic signal plans.	Los Angeles County Department of Public Works	Prior to issuance of grading or building permit
Noise				
Mitigation Measure 3.5.1 - All project construction activities shall only occur between 7:00 a.m. and 8:00 p.m. daily and not on Sundays and legal holidays. Construction truck access and haul routes shall be reviewed and approved by the County prior to commencing work. Additionally, all construction personnel shall park on-site.	Project Applicant	Restrict construction activity to hours noted.	Los Angeles County Department of Public Works and Los Angeles County Department of Public Health	Prior to issuance of grading or building permit
Mitigation Measure 3.5.2 - All construction equipment shall be in proper operating condition and fitted with standard factory noise attenuation features. All equipment shall be properly maintained to assure that no additional noise, due to worn or improperly maintained parts, would be generated.	Project Applicant	Maintain construction equipment and implement noise controls on fixed equipment.	Los Angeles County Department of Public Health and Construction Contractor	During Construction
Mitigation Measure 3.5.3 - The project shall incorporate design features and measures that locate noise sources such as parking areas, loading zones, trash bins, and mechanical equipment as far away from the noise sensitive receptor locations as possible to the satisfaction of the County Department of Public Health.	Project Applicant	Locate parking, loading, trash bins, and mechanical equipment as far away from residences, schools or other sensitive land uses.	Los Angeles County Department of Public Health	Prior to issuance of building permit
Mitigation Measure 3.5.4: The noise generated by the project shall remain within standards dictated by the Los Angeles County Code, Title 12 Environmental Protection, Section 12.08.440 and other applicable sections.	Project Applicant	Monitor construction noise	Los Angeles County Department of Public Health and Construction Contractor	During construction and occupancy
Mitigation Measure 3.5.5: In consideration of the nearest sensitive receptor, Media Arts and Entertainment Design Academy High School, noise from the project's air-conditioning or refrigeration equipment shall not exceed 55 dBA (Leq) on any point on the neighboring property line.	Project Applicant	Monitor air-conditioning and/or refrigeration equipment noise.	Los Angeles County Department of Public Health	Occupancy
Mitigation Measure 3.5.6: The proposed project is located within 500 feet of a residential area, therefore, collecting refuse with a collection vehicle between the hours of 10:00 PM and 6:00 AM is prohibited (LA County Code Title 12, Environmental Protection Section 12.08.520).	Project Applicant	Restrict refuge pick-up to the hours noted.	Los Angeles County Department of Public Health	Occupancy
Global Climate Change				
Mitigation Measure 3.6.1 - Energy efficient appliances and office equipment (pursuant to Energy Star or Green Machine ratings or other equivalent rating systems) shall be utilized throughout the building.	Project Applicant/ Tenant	Install energy efficient appliances.	Project Applicant/Tenant, Los Angeles County Department of Regional Planning, and Los Angeles County Department of Public Works	Occupancy
Mitigation Measure 3.6.2 - The buildings shall be equipped with fluorescent lighting for all overhead lighting which uses 75% less energy than incandescent lighting while delivering the same amount of illumination.	Project Applicant/ Tenant	Install fluorescent lighting to all overhead light fixtures.	Los Angeles County Department of Public Works	During construction and occupancy
Mitigation Measure 3.6.3 - Measures to address the urba heat i la d e e t hall be pr ided thr ugh the provision of light-colored roofing materials and the planting of shade trees within the parking lot, along the south and east sides of the restaurant building and along a majority of the perimeter of the project site.	Project Applicant	Install light-colored roofing materials and plant shade trees in the areas noted.	Los Angeles County Department of Regional Planning and Los Angeles County Department of Public Works	During construction and occupancy
Mitigation Monitoring				
Mitigation Compliance As a means of ensuring compliance of the above mitigation measures, the applicant and/or subsequent owner(s) are responsible for submitting annual mitigation compliance report to the Los Angeles County Department of Regional Planning for review, and for replenishing the mitigation monitoring account if necessary until such time as the mitigation measures have been implemented and completed.	Project Applicant and/or Subsequent Owner(s)	Submittal of annual mitigation compliance report; replenishing mitigation monitoring account.	Los Angeles County Department of Regional Planning	Annually until such time as all mitigation measures have been implemented and completed

HISTORIC PRESERVATION & DEMOLITION MITIGATION MEASURES

1/27/2011 2:41:11 PM

18662 MacArthur Blvd. Ste.200
Irvine, California 92612
(949) 798-3838
www.rkaa.com

ROBERT KUBICEK Architects And Associates, Inc.

LICENSED ARCHITECT
CRAIG JOHNSON
NO. C12434
STATE OF CALIFORNIA

COPYRIGHT 2011 , ALL RIGHTS RESERVED. ROBERT KUBICEK ARCHITECTS AND ASSOC, INC. THIS DRAWING IS AN INSTRUMENT OF SERVICE. IT IS THE PROPERTY OF ROBERT KUBICEK ARCHITECTS AND ASSOC, INC. AND MAY NOT BE REPRODUCED, OR REPRODUCTION HERE OF USED, WITHOUT WRITTEN PERMISSION OF THE ARCHITECT.

date:	
10/4/10	Bldg. Dept. Submittal
10/15/10	Health Dept. Submittal
1/6/11	Chattel Architecture Submittal
1/27/11	Chattel Architecture Submittal

NOTICE OF ALTERNATE BILLING OR PAYMENT CYCLE: THIS CONTRACT MAY ALLOW THE OWNER TO REQUIRE THE SUBMISSION OF BILLINGS OR ESTIMATES IN BILLING CYCLES OTHER THAN THIRTY DAYS. THIS CONTRACT MAY ALLOW THE OWNER TO MAKE PAYMENT ON SOME ALTERNATIVE SCHEDULE AFTER CERTIFICATION AND APPROVAL OF BILLING AND ESTIMATES. A WRITTEN DESCRIPTION OF SUCH OTHER BILLING AND/OR CYCLE APPLICABLE TO THE PROJECT IS AVAILABLE FROM THE OWNER AT THE OFFICES OF

OR HIS DESIGNATED AGENT SHALL PROVIDE THIS WRITTEN DESCRIPTION ON REQUEST

DEVELOPER:
CHARLES COMPANY
9034 W. SUNSET BLVD.
WEST HOLLYWOOD
CA 90069
TEL (310) 247-0900
FAX (310) 247-1525

CVS pharmacy
STORE #4524
909 S. ATLANTIC BLVD
LOS ANGELES, CA

design RKA
drawn RKA
check RKA

sheet HMM-2
of
job 09151

VII. FINDINGS REGARDING POTENTIAL SIGNIFICANT ENVIRONMENTAL EFFECTS THAT HAVE BEEN MITIGATED TO A LEVEL OF LESS THAN SIGNIFICANT

The Draft and Final EIR identified potentially significant environmental impacts from the proposed Project that could be mitigated to less than significant levels. These impacts include aesthetics/ light and glare, noise, solid waste, global climate change, and transportation and circulation. As authorized by Public Resources Code Section 21081 and CEQA Guidelines Sections 15091, 15092, and 15093, based on substantial evidence in the record, changes or alterations have been incorporated into the Project that avoid or substantially lessen the significant environmental impacts and, thus, that adoption of the mitigation measure as set forth below will reduce these significant effects to less than significant levels. A discussion of each topic is provided below.

A. Aesthetics/Light and Glare

Impact: *Lighting and Glare Impacts*

Implementation of the Project would result in the introduction of additional daytime and nighttime glare and light sources from what existed previously.

Finding:
Changes or alterations have been required in, or incorporated into the project, which avoid or substantially lessen the significant environmental effects as identified in the Final EIR.

Facts in Support of Finding:
Mitigation Measures 3.1.1, 3.1.2 and 3.1.3 are proposed to prevent any potential impacts from the Project 's exterior lighting and to ensure that the Project conforms to the standards outlined in County's Zoning Code for outdoor and street lighting. (all references to Mitigation Measures by number are to the Mitigation Measures identified in the Mitigation Monitoring and Reporting Program set forth in the Final EIR) Implementation of the following mitigation measures would ensure that potential lighting impacts would be reduced to a level that is less than significant.

Mitigation Measure 3.1.1: Building security lighting and parking lot lighting shall be designed so that no substantial light or glare would impact nighttime views of the surrounding area.

Mitigation Measure 3.1.2: Lighting shall be directed downward and inward to the greatest extent possible in order to limit lighting impacts, yet provide for adequate safety and security for building occupants and visitors.

Mitigation Measure 3.1.3: Lighting design features that would reduce light and glare impacts shall be incorporated into the final project design. These features include the use of low wattage bulbs with prismatic glass coverings that inhibit the spread of light and the shielding of lights to reduce glare such that neither the light source nor its image from a reflective surface is directly visible from any point measured five feet from the property line.

B. Noise

Impact: *Substantial temporary or periodic increase in ambient noise levels*

Short-term construction-generated noise levels could result in a substantial increase in ambient noise levels at nearby noise-sensitive land uses.

Finding:
Changes or alterations have been required in, or incorporated into the Project, which avoid or substantially lessen the significant environmental effects as identified in the Final EIR.

Facts in Support of Finding:
Mitigation Measure 3.5.1 and 3.5.2 would address the potential impacts associated with construction-generated noise and to provide direction to the Project applicant regarding necessary contractor instructions and a procedure to respond to any neighborhood noise concerns. The following mitigation measures reduce short-term construction-generated noise levels, including the limitation of construction activities to the less noise-sensitive periods of the day, and the use of mufflers to reduce individual equipment noise levels. With implementation, potential noise impacts would be reduced to a level that is less than significant.

Mitigation Measures 3.5.1: All project construction activities shall only occur between 7:00 a.m. and 8:00 p.m. daily and not on Sundays and legal holidays. Construction truck access and haul routes shall be reviewed and approved by the County prior to commencing work. Additionally, all construction personnel shall park on-site.

Mitigation Measure 3.5.2: All construction equipment shall be in proper operating condition and fitted with standard factory noise attenuation features. All equipment shall be properly maintained to assure that no additional noise, due to worn or improperly maintained parts, would be generated.

Impact: *Exposure to or generation of noise in excess of local or applicable standards*

Predicted noise levels during construction at nearby sensitive receptors could exceed applicable County noise standards.

Finding:
Changes or alterations have been required in, or incorporated into the project, which avoid or substantially lessen the significant environmental effects as identified in the Final EIR.

Facts in Support of Finding:
Mitigation Measures 3.5.2, 3.5.3 and 3.5.4 would address potential noise impacts over the short and long-term. The following mitigation measures would require adherence to construction operations and other measures in order to reduce exposure of sensitive receptors to excessive noise levels. Compliance with the County's Noise Ordinance is required by law, and meeting its standards for interior noise levels by implementing the following mitigation measures would reduce any potential impact to a level that is less than significant.

Mitigation Measure 3.5.2: All construction equipment shall be in proper operating condition and fitted with standard factory noise attenuation features. All equipment shall be properly maintained to assure that no additional noise, due to worn or improperly maintained parts, would be generated.

Mitigation Measure 3.5.3: The project shall incorporate design features and measures that locate noise sources such as parking areas, loading zones, trash bins, and mechanical equipment as far away from the noise sensitive receptor locations as possible to the satisfaction of the County Department of Public Health.

Mitigation Measure 3.5.4: The noise generated by the project shall remain within standards dictated by the Los Angeles County Code, Title 12 Environmental Protection, Section 12.08.440 and other applicable sections.

Impact: *Exceedance of Groundborne Vibration Standards Impacts*

Occupants of nearby residential dwelling units and adjacent school could be exposed to groundborne vibration levels that would exceed applicable standards.

Finding:
Changes or alterations have been required in, or incorporated into the project, which avoid or substantially lessen the significant environmental effects as identified in the Final EIR.

Facts in Support of Finding:
The proposed Project does not include operation of equipment or processes that would create potentially significant levels of ground vibration. Mitigation Measures 3.5.3, 3.5.4, 3.5.5 and 3.5.6 would reduce potential impacts of groundborne vibration primarily created by vehicle trips traveling to and from the Project site including loading operations by locating the primary driveways for ingress and egress to the site as far away as possible from any sensitive noise receptor. Implementation of the following mitigation measures would reduce any potential impact to a level that is less than significant.

Mitigation Measure 3.5.3: The project shall incorporate design features and measures that locate noise sources such as parking areas, loading zones, trash bins, and mechanical equipment as far away from the noise sensitive receptor locations as possible to the satisfaction of the County Department of Public Health.

Mitigation Measure 3.5.4: The noise generated by the project shall remain within standards dictated by the Los Angeles County Code, Title 12 Environmental Protection, Section 12.08.440 and other applicable sections.

Mitigation Measure 3.5.5: In consideration of the nearest sensitive receptor, Media Arts and Entertainment Design Academy High School, noise from the project's air-conditioning or refrigeration equipment shall not exceed 55 dBA (Leq) on any point on the neighboring property line.

Mitigation Measure 3.5.6: The proposed project is located within 500 feet of a residential area, therefore, collecting refuse with a collection vehicle between the hours of 10:00 PM and 6:00 AM is prohibited (LA County Code Title 12, Environmental Protection Section 12.08.520).

C. Solid Waste

Impact: *Comply with Federal, State, and local statutes and regulations related to solid waste*

Implementation of the Project could significantly reduce the lifespan of the affected landfill.

Finding:
Changes or alterations have been required in, or incorporated into the Project, which avoid or substantially lessen the significant environmental effects as identified in the Final EIR.

Facts in Support of Finding:
Mitigation Measure 3.3.3 would address the impacts associated with the amount of construction and demolition debris that would be generated from development of the Project. This mitigation measure requires that a minimum of 50% of the construction and demolition debris generated by the Project be recycled or reused. Implementation of this mitigation measure would reduce the impact to a level that is less than significant.

Mitigation Measure 3.3.3: The project shall comply with Chapter 20.87 of the Los Angeles County Code requiring that a minimum of 50% of the construction and demolition debris generated by the proposed project be recycled or reused. A Construction and Demolition Debris Recycling and Reuse Plan shall be filed with the Los Angeles County Department of Public Works and an approval shall be obtained in conformance with the County Code requirements. Recycling and reuse of the construction and demolition debris shall be performed in accordance with the approved plan, and the requisite Progress Report Form(s), Final Compliance Report Form, and any required Recycling and Reuse Amendment Forms shall be submitted as required.

Impact: *Be served by a landfill with sufficient permitted capacity to accommodate the project's solid waste disposal needs*

Implementation of the Project could exceed the solid waste disposal capacity at the available landfills.

Finding:
Changes or alterations have been required in, or incorporated into the project, which avoid or substantially lessen the significant environmental effects as identified in the Final EIR.

Facts in Support of Finding:
Mitigation Measures 3.3.1, 3.3.2, 3.3.4 and 3.3.5 would address the impacts associated with the increased demand for landfill capacity for solid waste from construction activities and operations. The Project will implement a recycling program for the diversion of recyclable cardboard packaging materials. This program will result in an approximate 30% reduction in the amount of solid waste transmitted to landfills. The proposed Project would also operate in accordance with the County's Integrated Waste Management Plan, in addition to applicable federal and State regulations associated with solid waste. Implementation of these mitigation measures would reduce these impacts on landfill capacity to a level that is less than significant.

Mitigation Measure 3.3.1: The project shall implement a recycling program for the diversion of recyclable cardboard packaging materials. The program will entail the separation of eligible materials from its solid waste stream for transfer to and re-use by recycling entities.

Mitigation Measure 3.3.2: The project shall provide recycling bins to promote recycling of paper, metal, glass, and other recyclable materials.

Mitigation Measure 3.3.4: The proposed re-opening of the Jim's Burgers building as a restaurant shall require provision of a grease treatment device and shall be subject to review and approval by the County Department of Public Works.

Mitigation Measure 3.3.5: Should any operation within the subject project include the construction, installation, modification, or removal of underground storage tanks, industrial waste treatment or disposal facilities, and/or storm water treatment facilities, Public Works' Environmental Programs Division shall be contacted for required approvals and operating permits.

D. Global Climate Change

Impact: *Greenhouse Gas Emissions - Operational*

The primary source of greenhouse gas emissions generated by the Project would be from motor vehicles. Other emission impacts are from Project operations, which would be generated from the combustion of natural gas for space and water heating, as well as off-site greenhouse gas emissions from the generation of electricity consumed by the Project.

Finding:
Changes or alterations have been required in, or incorporated into the project, which avoid or substantially lessen the significant environmental effects as identified in the Final EIR.

Facts in Support of Finding:
Although no mitigation measures are required since no potentially significant impacts have been identified, Mitigation Measures 3.6.1, 3.6.2 and 3.6.3 will cumulatively reduce the Project's operational greenhouse gas emissions and its effects on global warming by approximately two percent as compared to the unmitigated condition.

Mitigation Measure 3.6.1: Energy efficient appliances and office equipment (pursuant to Energy Star or Green Machine ratings or other equivalent rating systems) shall be utilized throughout the building.

Mitigation Measure 3.6.2: The buildings shall be equipped with fluorescent lighting for all overhead lighting which uses 75% less energy than incandescent lighting while delivering the same amount of illumination.

Mitigation Measure 3.6.3: Measures to address the urba heat i la d effect shall be provided through the provision of light-colored roofing materials and the planting of shade trees within the parking lot, along the south and east sides of the restaurant building and along a majority of the perimeter of the project site.

E. Transportation and Circulation

Impact: *Traffic Impacts*

The Project would generate significant traffic impacts at the intersection of Atlantic Boulevard and Whittier Boulevard in the afternoon peak hour.

Finding:
Changes or alterations have been required in, or incorporated into the project, which avoid or substantially lessen the significant environmental effects as identified in the Final EIR.

Facts in Support of Finding:
Mitigation Measures 3.4.1, 3.4.2, 3.4.3 and 3.4.4 have been proposed to mitigate the impacts associated with traffic increases at the intersection of Atlantic Boulevard and Whittier Boulevard. These mitigation measures require the Applicant to dedicate six feet along the entire Whittier Boulevard frontage of the Project site, and widen and create a new lane along Whittier Boulevard adjacent to the Project. Implementation of the following mitigation measures would reduce any potential impact to a level that is less than significant.

Mitigation Measure 3.4.1: The eastbound approach of Whittier Boulevard to Atlantic Boulevard, adjacent to the site shall be widened to provide an eastbound right-turn lane to the satisfaction of the Los Angeles County Department of Public Works. The new lane shall be 100 feet in length, measured from the existing crosswalk/limit line. A 60 foot long transition shall connect the new, widened curb to the existing curb in front of the new commercial development to the west of the pharmacy site. The right-turn lane shall be 12 feet wide and the two straight lanes adjacent to it shall each be widened by restriping from 10 feet to 11 feet.

Mitigation Measure 3.4.2: To maintain the existing sidewalk width of 15 feet, the project developer shall dedicate a width of approximately six feet along the entire Whittier Boulevard frontage of the project site.

Mitigation Measure 3.4.3: All truck traffic associated with project construction shall utilize Atlantic Boulevard or any other acceptable haul route for access to and from the project site to the satisfaction of the Los Angeles County Department of Public Works.

Mitigation Measure 3.4.4: Prior to the issuance of grading or building permits, the following items shall be submitted to the Los Angeles County Department of Public Works, Traffic and Lighting Division for review and approval:

1) Detailed striping and traffic signal plans for the proposed mitigation measures. The plans shall include any necessary modifications to the existing photo red light system at the intersection of Atlantic Boulevard and Whittier Boulevard.

2) A 40-foot-scale site plan of the project showing site access locations, interior circulation, parking, adjacent intersections/driveways, and opposite driveways along the project site.

VIII. FINDING REGARDING POTENTIAL SIGNIFICANT ENVIRONMENTAL EFFECTS THAT CANNOT BE MITIGATED TO A LEVEL LESS THAN SIGNIFICANT

This section is prepared in accordance with CEQA Guidelines Section 15126.2(b), which requires the discussion of any significant environmental effects that cannot be avoided if a project is implemented. These include impacts that can be mitigated, but cannot be reduced to a less than significant level. An analysis of environmental impacts caused by the proposed Project has been conducted and is contained in the EIR. As discussed in the environmental impact analysis presented in Section 3.0 of this EIR, the proposed Project would result in significant unavoidable adverse impacts in the area of cultural resources. Consequently, in accordance with Section 15093 of the state CEQA Guidelines, a Statement of Overriding Considerations has been prepared (Section XIII) to substantiate the County's decision to accept this unavoidable substantial, adverse environmental effect because of benefits afforded by the project.

A. Cultural Resources

Impact: *Cause a substantial adverse change in the significance of a historical resource*

Substantial alterations or modifications to the character-defining features of the historic Golden Gate Theater building may represent an irretrievable loss of items considered to be historically significant.

Finding:
Changes or alterations have been required in, or incorporated into the project, which avoid or substantially lessen the significant environmental effects as identified in the Final EIR. Additionally, specific economic, legal, social, technological, or other consideration, including provision of employment opportunities for highly trained workers, make infeasible the mitigation measures or project alternatives identified in the Final EIR.

Facts in Support of Finding:
The Project will not result in a substantial adverse change to the historical significance of the Golden Gate Theater. The modified project design strives to maintain most of the Golden Gate Theater building's historic fabric (including the balcony) and sequence of space to the maximum extent feasible while accommodating the retail use. The Project incorporates and preserves many of the Golden Gate Theater's character-defining features, including: (1) retaining, restoring, and/or treating many exterior features; (2) maintaining the overall scale, height, and sequence and volume of space in the Golden Gate Theater building; (3) treating and exposing 75% of the original lobby, underside of the balcony, and auditorium ceilings; (4) retaining original light fixtures, and (5) treating and exposing original auditorium walls, including the proscenium arch and the leading edge of the balcony. The Project's Conditions of Approval require that the lobby concession shell be crated and stored on site, the original auditorium floor be leveled in a reversible matter, original materials to be stored on site be inventoried and stored in the mezzanine or balcony, the balcony and mezzanine be mothballed, and the tenant incorporate a minimum of six historic photographs and panels into the interior design. In addition, the modified project design ensures that the Project is reversible, meaning the Golden Gate Theater building could be converted back into theater use in the future without the loss of the qualities that the made the Golden Gate Theater an historic resource. Furthermore, implementation of mitigation measures 3.2.1 through 3.2.8 will ensure that the Project does not result in a substantial adverse change to the historical significance of the Golden Gate Theater. Because the Project, as mitigated, does not result in a substantial adverse change to the historical significance of the Golden Gate Theater, it does not result in material impairment and, accordingly, does not result in a significant impact under CEQA. The conclusion that the Project will not result in a substantial adverse change is confirmed by a number of technical reports and comments provided by the County's architectural historical expert, Robert Chattel with Chattel Architecture Planning and Preservation, Inc. However, because the modified project design has not yet gone through the design development process, it is conceptual and meant to be flexible, presenting a range of options to be further studied during design development. Given that the modified project design does not conform with the *Secretary of the Interior's Standards*, the conservative approach is to concede that the modified project design will result in significant impacts to historical resources, which would require adoption of a Statement of Overriding Considerations.

Mitigation Measure 3.2.1: Maintenance, repair, stabilization, restoration, preservation, and conservation of all of the exterior and certain elements of the interior of the Golden Gate Theater Building shall be conducted in a manner consistent with the Rehabilitation Standards of the Secretary of the Interior's Standards for Treatment of Historic Properties with Guidelines for Preserving, Rehabilitating, Restoring and Reconstructing Historic Buildings (Secretary's Standards, 1995), Weeks and Grimmer, as set forth in the Final EIR. Prior to the issuance of a building permit and to the satisfaction of the Los Angeles County Department of Regional Planning (DRP), the project developer shall retain a qualified professional architectural historian to prepare a Secretary's Standards conformance report, and oversee and advise on the rehabilitation of the Golden Gate Theater Building. Supervision will include activities relating to materials selection, construction methods, and aesthetic and physical exterior and interior alterations that are to be utilized, and the manner in which they are to be employed in rehabilitation of the historical resource. At a minimum, the project shall retain key elements essential to theater function, as set forth in the Final EIR. The design development plans shall be reviewed with the California Historical Building Code (CHBC, Part 8 of Title 24) provisions for compliance to the best reasonable extent.

Mitigation Measure 3.2.2: The Los Angeles County Historical Landmarks and Records Commission shall review and approve the design development plans for consistency of the maintenance, repair, stabilization, restoration, preservation and conservation of the exterior and certain elements of the interior of the Golden Gate Theater Building as noted in Mitigation Measure 3.2.1 with the Secretary of the Interior's Standards for Rehabilitation.

Mitigation Measure 3.2.3: A Hi t ri American Building Sur e (HABS) documentation shall be prepared to the satisfaction of the DRP. Such a procedure involves the recording of the structure through a written report and large-format photographs. The documentation would be completed on standardized forms and would be accurate in detail to such an extent that after alteration, the structure could be restored/reconstructed from the survey data. Copies of the documents shall be filed with the appropriate State (State of California, Office of Historic Preservation) and local repositories (Los Angeles County Central Library).

Mitigation Measure 3.2.4: All repair and cleaning work on architecturally or historically significant features shall be conducted according to the design development plans and specifications prepared by a qualified preservation architect to the satisfaction of the Department of Regional Planning. In addition, the repair and cleaning work shall be conducted by a contractor experienced and qualified in the repair or cleaning of such features as ornamental plaster and iron work.

Mitigation Measure 3.2.5: A Secretary's Standards conformance report shall be prepared by a qualified professional architectural historian identified in Mitigation Measure 3.2.1 to evaluate the design development plans of the modified project design for conformance with the Secretary of the Interior's Standards for Treatment of Historical Properties noted in Mitigation Measure 3.2.1 The design development plans shall include, but not limited to, the following:

- A study of options to minimize the number of attachments necessary to connect banner signage to the building exterior if any banner signage is proposed.
- A study on the feasibility of heating and cooling the high volume auditorium space. A range of options for treatment of the high volume auditorium space between the balcony edge and stage shall be evaluated based on specific needs of the tenant, with the goal of exposing the volume of the space and decorative ceiling and walls to the maximum extent feasible. In addition, cleaning of the attic space between the historic ceiling and the roof of the auditorium shall be studied and the treatment of this issue may factor into the ability to expose all or certain portions of the historic ceiling.
- A study of a range of options for treatment of the new wall to emphasize the stage space. It may be painted in *tromp l'oeil* fashion to mimic a partially drawn-up stage curtain or will otherwise finished in a fashion emphasizing the stage area.
- A range of options for treatment of the coffered underside of the balcony shall be evaluated based on specific needs of the tenant. A suspended grid system incorporating light fixtures without acoustical ceiling tiles (exposing the underside of the balcony) shall be considered.
- Further consideration on the retention rather than removal of the existing fire escape stair on the east elevation.
- Selection of paint color choices for the building exterior based on tenant needs and recommendations provided by the qualified architectural historian identified in Mitigation Measure 3.2.1.

Mitigation Measure 3.2.6: The decorative features, including ornament and openings on the north elevation shall be retained and shall be cleaned and maintained with gentlest means possible at less than 400 psi, to be determined after inspection and recommendation by a qualified masonry restoration specialist.

Mitigation Measure 3.2.7: Detailed, hand measured drawings and selective templates prepared by a qualified preservation architect shall be made of the lobby stair for possible future reconstruction.

Mitigation Measure 3.2.8: Alterations to the Golden Gate Theater building (interior or exterior) shall be prohibited until a tenant has signed a lease.

IX. FINDINGS REGARDING CUMULATIVE ENVIRONMENTAL EFFECTS THAT ARE LESS THAN SIGNIFICANT

Pursuant to Section 15130 of the CEQA Guidelines, the following findings and statements of fact identify potentially significant cumulative impacts discussed in the Final EIR and the Project's incremental contribution to the impact. For the following potentially significant cumulative impacts categories, the Project's incremental effect is not cumulatively considerable.

A. Noise

Impact: *Increase in ambient noise levels*

The combined effect of the project-related construction activity and related projects will increase noise levels.

Finding:
The Project cumulative effect on noise levels is less than significant, and its incremental effect on noise is not cumulatively considerable.

Facts in Support of Finding:
The adjacent residential and commercial uses would be exposed to only limited construction-related noise sources. Furthermore, there are no related projects near enough to the Project to have a measurable, direct cumulative noise impact at the project. Additionally, the proposed Project itself would not be a permanent source of noise and, therefore would not contribute to cumulative noise impacts. Noise impacts from the Project would thus be cumulatively less than significant.

B. Global Climate Change

Impact: *Greenhouse Gas Emissions*

GHG emissions generated by short-term construction activity and long-term operations of the Project.

Finding:
The Project's cumulative effect on greenhouse gas emissions is less than significant, and its incremental effect on greenhouse gas emissions is not cumulatively considerable.

Facts in Support of Finding:
The emissions generated by the Project would be small, approximately 2,818 Metric Tons (MT) per year. The California Air Pollution Control Officers Association (CAPCOA) recommends 10,000 MT CO_2 per year as the threshold. California Air Resources Board (CARB) in their draft guidelines is recommending a threshold of 7,000 MT CO_2 per year for industrial projects. The estimated Project emissions are below these thresholds, and as a result, the Project is not considered to have a significant cumulative impact.

X. FINDINGS REGARDING CUMULATIVE ENVIRONMENTAL EFFECTS THAT ARE MITIGATED TO A LEVEL OF LESS THAN SIGNIFICANT

A. Aesthetics/Light and Glare

Impact: *Lighting and Glare Impacts*

Implementation of the Project would result in the introduction of additional daytime and nighttime glare and light sources from what existed previously.

Finding:
The Project will create additional sources of light as part of the reuse and renovation of the two buildings as well as the use of the adjoining parking lots. However, changes or alterations have been required in, or incorporated into, the Project which avoid or substantially lessen the potentially significant cumulative environmental effects to less than significant, as identified in the Final EIR. The Project's incremental effect on lighting and glare is not cumulatively considerable.

Facts in Support of Finding:
There are no related projects near enough to the Project to have a measurable, direct cumulative night lighting impact at the Project. Additionally, because the lighting proposed by the Project will be necessary to provide security per County Code requirements, all lighting sources will be properly maintained on-site and shielded to minimize the effect of glare upon adjacent properties. Therefore, the installation of exterior building and security lighting in conformance with Mitigation Measures 3.1.1 - 3.1.3 would have a less than significant cumulative impact.

B. Solid Waste

Impact: *Comply with Federal, State, and local statutes and regulations related to solid waste*

Implementation of the Project along with the related projects would contribute to the cumulative solid waste impacts, although during relatively short periods of time only. This could result in a reduced lifespan of the affected landfill.

HISTORIC PRESERVATION & DEMOLITION MITIGATION MEASURES

ROBERT KUBICEK Architects And Associates, Inc.
18662 MacArthur Blvd. Ste.200
Irvine, California 92612
(949) 798-3838
www.rkaa.com

LICENSED ARCHITECT
CRAIG JOHNSON
NO. C12434
STATE OF CALIFORNIA

COPYRIGHT 2011 , ALL RIGHTS RESERVED. ROBERT KUBICEK ARCHITECTS AND ASSOC, INC. THIS DRAWING IS AN INSTRUMENT OF SERVICE. IT IS THE PROPERTY OF ROBERT KUBICEK ARCHITECTS AND ASSOC, INC. AND MAY NOT BE REPRODUCED, OR REPRODUCTION HERE OF USED, WITHOUT WRITTEN PERMISSION OF THE ARCHITECT.

date:	
10/4/10	Bldg. Dept. Submittal
10/15/10	Health Dept. Submittal
1/6/11	Chattel Architecture Submittal
1/27/11	Chattel Architecture Submittal

NOTICE OF ALTERNATE BILLING OR PAYMENT CYCLE: THIS CONTRACT MAY ALLOW THE OWNER TO REQUIRE THE SUBMISSION OF BILLINGS OR ESTIMATES IN BILLING CYCLES OTHER THAN THIRTY DAYS. THIS CONTRACT MAY ALLOW THE OWNER TO MAKE PAYMENT ON SOME ALTERNATIVE SCHEDULE AFTER CERTIFICATION AND APPROVAL OF BILLING AND ESTIMATES. A WRITTEN DESCRIPTION OF SUCH OTHER BILLING AND/OR CYCLE APPLICABLE TO THE PROJECT IS AVAILABLE FROM THE OWNER AT THE OFFICES OF

OR HIS DESIGNATED AGENT SHALL PROVIDE THIS WRITTEN DESCRIPTION ON REQUEST

DEVELOPER:
CHARLES COMPANY
9034 W. SUNSET BLVD.
WEST HOLLYWOOD
CA 90069
TEL (310) 247-0900
FAX (310) 247-1525

CVS pharmacy
STORE #4524
909 S. ATLANTIC BLVD
LOS ANGELES, CA

design RKA
drawn RKA
check RKA

sheet HMM-3
of
job 09151

Finding:
The project's cumulative effect on solid waste disposal facilities is less than significant, and its incremental effect on solid waste disposal facilities is not cumulatively considerable.

Facts in Support of Finding:
The proposed Project could cause incremental increases in the demand for landfill capacity for solid waste. However, these increases would be negligible and could easily be accommodated by the County-wide system currently in place. Consequently, the Project's potential to contribute to the cumulative impacts of solid waste disposal is minimal and less than significant impact. Furthermore, Mitigation Measure 3.3.3 would address the impacts associated with the amount of construction and demolition debris that would be generated from development of the Project. This mitigation measure requires that a minimum of 50% of the construction and demolition debris generated by the Project be recycled or reused, which further reduces the demand on the County-wide system. Implementation of this mitigation measure would reduce the cumulative impact to a level that is less than significant.

C. Traffic and Circulation

Impact: *Increase in Traffic Generation*

Implementation of the Project may cumulatively impact the intersection Atlantic Boulevard and Whittier Boulevard.

Finding:
The Projec'st cumulative effect on traffic and access is less than significant, and its incremental effect on traffic and access is not cumulatively considerable.

Facts in Support of Finding:
Traffic generated by the Project plus cumulative conditions is not expected to cause the intersections of Whittier Boulevard and Atlantic Boulevard to worsen from acceptable to unacceptable conditions, or cause an unacceptable Intersection Capacity Utilization (ICU) to increase by 0.02 or more. Consequently, the Project plus cumulative conditions is not expected to exceed the applicable thresholds of significance at any of the study intersections.

XI. FINDING REGARDING CUMULATIVE ENVIRONMENTAL EFFECTS THAT CANNOT BE MITIGATED TO A LEVEL OF LESS THAN SIGNIFICANT

The County has determined that, although Final EIR mitigation measures, design features included as part of the Project, and conditions of approval be imposed on the Project will provide a substantial mitigation of the following effects, these effects cannot feasibly or effectively mitigated to a less than significant level. Consequently, in accordance with Section 15093 of the State CEQA Guidelines, a Statement of Overriding Consideration has been prepared (Section XIII) to substantiate the County's decision to accept these unavoidable substantial, adverse environmental effects because of the benefits afforded by the Project.

A. Cultural Resources

Impact: *Cause a substantial adverse change in the significance of a historical resource.*

Significant impacts to the Golden Gate Theater combined with the loss or substantial alteration of other 1920s neighborhood movie palaces in Los Angeles, stemming from past, present, and reasonably foreseeable future projects, may create a significant cumulative impact.

Finding:
Modifications to the character-defining features of the historic Golden Gate theater and its change in use represent an irretrievable loss of items considered to be a significant cumulative cultural resources impact.

Facts in Support of Finding:
Numerous 1920's neighborhood movie palaces in Los Angeles have been lost due to demolition or significantly altered. Additionally, it is reasonably foreseeable that future projects may demolish or substantially alter the remaining 1920s neighborhood movie palaces in Los Angeles for a number of reasons, including: 1) they become less profitable for the owners due to their size, single-screen configuration and/or seating arrangement, 2) the urban land beneath them may become more valuable for other types of uses, 3) the expense of earthquake repairs and/or seismic upgrades may make such repairs cost-prohibitive, and 4)the public's entertainment expectations and desired movie-going experiences may change. Therefore, significant impacts to the Golden Gate Theater could combine with future loss and/or alteration of the remaining 1920s movie palaces to create a potentially significant cumulative impact.

The Project will not result in a substantial adverse change to the historical significance of the Golden Gate Theater. The modified project design strives to maintain most of the Golden Gate Theater building's historic fabric (including the balcony) and sequence of space to the maximum extent feasible while accommodating the retail use. The Project incorporates and preserves many of the Golden Gate Theater's character defining features, including: (1) retaining, restoring, and/or treating many exterior features; (2) maintaining the overall scale, height, and sequence and volume of space in the Golden Gate Theater building; (3) treating and exposing 75% of the original lobby, underside of the balcony, and auditorium ceilings; (4) retaining original light fixtures, and (5) treating and exposing original auditorium walls, including the proscenium arch and the leading edge of the balcony. The Project's Conditions of Approval require that the lobby concession shell be crated and stored on site, the original auditorium floor be leveled in a reversible matter, original materials to be stored on site be inventoried and stored in the mezzanine or balcony, the balcony and mezzanine be mothballed, and the tenant incorporate a minimum of six historic photographs and panels into the interior design. In addition, the modified project design ensures that the Project is reversible, meaning the Golden Gate Theater building could be converted back into theater use in the future without the loss of the qualities that the made the Golden Gate Theater an historic resource. Furthermore, implementation of mitigation measures 3.2.1 through 3.2.8 will ensure that the Project does not result in a substantial adverse change to the historical significance of the Golden Gate Theater. Because the Project, as mitigated, does not result in a substantial adverse change to the historical significance of the Golden Gate Theater, it does not result in material impairment and, accordingly, does not result in a significant impact under CEQA. The conclusion that the Project will not result in a substantial adverse change is confirmed by a number of technical reports and comments provided by the County's architectural historical expert, Robert Chattel with Chattel Architecture Planning and Preservation, Inc. However, because the modified project design has not yet gone through the design development process, it is conceptual and meant to be flexible, presenting a range of options to be further studied during design development. Given that the modified project design does not conform with the *Secretary of the Interior's Standards*, the conservative approach is to concede that the modified project design will result in significant impacts to historical resources, which would require adoption of a Statement of Overriding Considerations.

XII. FINDINGS REGARDING ALTERNATIVES TO THE PROJECT

The EIR contains a range of alternatives to the proposed Project to provide informed decision making in accordance with CEQA Guidelines Section 15126(a). As described below, the alternatives analyzed in this EIR include:

- **Alternative 1 - No Project/No Development.** Under this alternative, no development of the project site would occur. The project site would remain in its current vacant state and no adaptive re-use of the Golden Gate Theater or Jim's Burger would take place.
- **Alternative 2 - Theater Re-Use.** This alternative proposes the reuse and rehabilitation of the Golden Gate Theater as originally designed circa 1920s and the renovation and re-opening of the Jim's Burgers building.
- **Alternative 3 - Restaurant/Nightclub.** This alternative proposes the adaptive reuse and rehabilitation of the Golden Gate Theater for use as a restaurant/nightclub and the renovation and re-opening of the Jim's Burgers building.
- **Alternative 4 - Church Use.** This alternative proposes the adaptive reuse and rehabilitation of the Golden Gate Theater for use as a church and the renovation and re-opening of the Jim's Burgers building.

A. Alternatives Eliminated From Further Consideration

Alternatives that are remote or speculative, or effects of which cannot be reasonably predicted, need not be considered pursuant to CEQA Guidelines Section 15126(f)(2). As set forth in CEQA Guidelines Section 15126.6(c), alternatives may be eliminated from detailed consideration in an EIR if they fail to meet most of the project objectives, are infeasible, or do not avoid any significant environmental effects.

The Applicant evaluated a number of project alternatives to identify ways to mitigate and/or avoid significant environmental impacts associated with the proposed Project. For practical reasons however, not every alternative was analyzed in thorough detail and many were deemed infeasible, and thus dismissed from consideration. One of the alternatives involved the possibility of an alternate site location for the Project. The alternate site alternative was determined to be infeasible due to the fact that the subject property is currently owned by the Applicant thus; the Project proponent has no financial burden relative to securing property for the project. In addition, the alternative site alternative would not meet the project objective to maintain the historic integrity and value of the existing vacant theater building through its adaptive re-use so that it retains as many of its significant elements as possible.

B. No Project Alternative (Alternative 1)

Description:
This alternative considers what would reasonably be expected to occur on the site in the absence of the proposed Project. This alternative would not allow implementation of the proposed Project or other physical improvements to the historical Golden Gate Theater building or the Jim's Burger building beyond what already exists. The buildings are in a state of disrepair. Additionally, the current unsafe conditions at the proposed Project site would continue to be present.

Finding:
The Board of Supervisors finds that the No Project Alternative would not meet any of the Project objectives and would not meet the goals and objectives of the County's General Plan. In addition, the No Project Alternative would not benefit from the positive features of the proposed Project. Under the No Project Alternative, the unsafe conditions that currently exist at the proposed Project site would continue to be present. This alternative would not reduce the safety hazards associated with the buildings, or promote the enhancement and restoration of the historical Golden Gate Theater building, and the Project site would continue to attract criminal behavior.

Facts in Support of the Finding:
The No Project Alternative does not achieve any of the four objectives of the proposed Project. The No Project Alternative would not encourage the rehabilitation of existing commercial uses and development of new commercial infill along the major corridors (Whittier, Olympic and Atlantic Boulevards) where commercial uses are designated on the Land Use Plan map and where transportation and other municipal services can support development. Further, the No Project Alternative would fail to promote, encourage and support the strengthening of existing industrial and commercial job producing activities by creating a project that could provide job-producing activities in East Los Angeles. Furthermore, the absence of activity and improvements on the Project site would not only prevent the visual characteristics of the site from being enhanced, but it would also create a situation in which the Project site would continue to deteriorate.

C. Theater Re-Use Alternative (Alternative 2)

Description:
This alternative considers restoring the Golden Gate Theater to its original design circa 1920s as a single screen 1,500 seat theater use and re-opening the Jim's Burger building. Restoring the Golden Gate Theater to its original design would have less than significant impacts to cultural resources than the proposed Project, which would include renovations to accommodate a retail pharmacy use, and more of the interior of the original structure would remain intact. However, this alternative would have greater parking demands than the proposed Project. The Theater Re-use Alternative, based on a seating capacity of 1,500, would require 500 on-site parking spaces (1 space/3 persons), which is significantly higher than the 31 spaces required by County Code (34 spaces are being provided) for the proposed pharmacy, and significantly more than the site will accommodate. The re-opened restaurant requires 10 additional parking spaces. Thus, parking for the Theater Re-Use Alternative could not be provided on-site or in the surrounding area. The Theater Re-Use Alternative would also have greater solid waste impacts that the proposed Project.

Finding:
The Board of Supervisors hereby finds that the Theater Re-Use Alternative is infeasible and unreasonable and will, therefore, not be adopted in lieu of the proposed Project.

Facts in Support of the Finding:
The Theater Re-Use Project Alternative would achieve three of the four objectives of the proposed Project. The Theater Re-Use Alternative would fail to promote and support the strengthening of existing industrial and commercial job producing activities because no applicant has expressed interest in the restoration of the Golden Gate Theater as a theater. The only reuse application is for a pharmacy, and given that the building has remained vacant for nearly 20 years with no application for a theater, such a reuse is unlikely and therefore considered infeasible. Moreover, the Theater Re-Use Alternative may fail to promote, encourage or support the strengthening of existing industrial and commercial job producing activities by producing a project that potentially may not be economically viable given the lack of interest shown in single screen theaters. In addition, the Theater Re-Use Alternative would not be able to accommodate the significant increase in the amount of on-site parking needed to accommodate the proposed Theater Re-Use Alternative, and would have greater solid waste impacts than the proposed Project.

D. Restaurant/Nightclub Alternative (Alternative 3)

Description:
This Restaurant/Nightclub Alternative considers the adaptive reuse and rehabilitation of the Golden Gate Theater building for use as a restaurant/nightclub and the renovation and re-opening of the Jim's Burger building. Renovating the Golden Gate Theater Building to accommodate a restaurant/nightclub would have similar significant impacts to cultural resources as the proposed Project, and may or may not result in a significant impact on the historic significance of the Golden Gate Theater building. This alternative would have greater parking demands than the proposed Project. The Restaurant/Nightclub Alternative, based on a seating capacity of 425 persons, would require 141 on-site parking spaces (1 space/3 persons), which is significantly higher than the 31 spaces required by County Code (34 spaces are being provided) for the proposed pharmacy, and significantly more than the site will accommodate. The re-opened restaurant requires 10 additional parking spaces. Thus, parking for the Restaurant/Nightclub Alternative could not be provided on-site or in the surrounding area. The Restaurant/Nightclub Alternative would also have greater solid waste impacts that the proposed Project.

Finding:
The Board of Supervisors hereby finds that the Restaurant/Nightclub Alternative is infeasible and impracticable and will, therefore, not be adopted in lieu of the proposed Project.

Facts in Support of the Finding:
The Restaurant/Nightclub Alternative would achieve the four objectives of the proposed Project, but would not be able to accommodate the significant increase in the amount of on-site parking needed to accommodate the proposed Restaurant/Nightclub Alternative, and would have greater solid waste impacts than the proposed Project. In addition, the Restaurant/Nightclub Alternative would have similar significant impacts on cultural resources as the proposed Project, and may or may not result in a significant impact on the historic significance of the Golden Gate Theater building. However, no applicant has expressed interest in the adaptive reuse and rehabilitation of the Golden Gate Theater building as a restaurant/nightclub. The only reuse application is for a pharmacy, and given that the building has remained vacant for nearly 20 years with no application for a restaurant/nightclub use, such a reuse is unlikely and therefore considered infeasible.

E. Church Alternative (Alternative 4)

Description:
This Church Alternative considers the adaptive reuse and rehabilitation of the Golden Gate Theater for use as a church and the renovation and re-opening of the Jim's Burger building. Renovating the Golden Gate Theater building to accommodate a church would have less significant impacts to cultural resources than the proposed Project. The use of the building as a church could be consistent with the restoration of the facility to its original design and would likely require less renovation to the character defining features of the building. Interior and exterior renovations required for this alternative would likely not compromise the integrity of the historical resource. However, this alternative would have greater parking demands than the proposed Project. The parking requirement for the Church Alternative was estimated using Los Angeles County parking standards for churches, which is based on the building occupant load. The occupant load assumption for the building is 650 persons. Parking required for the Church Alternative would be 130 spaces (1 space for each 5 persons permitted under the occupancy load), which is significantly higher than the 31 spaces required by County Code (34 spaces are being provided) for the pharmacy, and significantly more than the site will accommodate. The re-opened restaurant requires 10 additional parking spaces. Thus, parking for the Church Alternative could not be provided on site.

Finding:
The Board of Supervisors hereby finds that the Church Alternative is infeasible and unreasonable and will, therefore, not be adopted in lieu of the proposed Project.

Facts in Support of the Finding:
The Church Alternative would achieve three of the four objectives of the proposed Project. This alternative would fail to promote and support the strengthening of existing industrial and commercial job producing activities or creating an environment conducive to economic growth by creating a church use that operates as a non-profit organization and would not offer taxable goods or services to provide a revenue source to the County that could assist in providing needed improvements and services to the East Los Angeles Community. The Church Alternative would not be able to accommodate the significant increase in the amount of on-site parking needed to accommodate the proposed Church Alternative. Additionally, as discussed in Alternative 2 and 3, the only reuse application is for a pharmacy, and given that the building has remained vacant for nearly 20 years with no application for a church use, such a reuse is unlikely and therefore considered infeasible. The Church Alternative would not achieve all of the Project objectives.

F.Environmentally Superior Alternatives

The Theater Re-Use Alternative (Alternative 2) and Church Alternative (Alternative 4) respectively) are considered to be the environmentally superior alternatives. Both Alternatives were determined to have the fewest negative impacts on the physical environment. The Theater Re-Use and Church Alternatives would have less adverse environmental impacts than the proposed Project; however, Theater Re-Use and Church Alternatives would not meet all of the objectives of the Project. Additionally, no Applicant has expressed interest in the adaptive reuse of the building for a theater or church use. The only reuse application is for a pharmacy use, and given that the building has remained vacant for nearly 20 years with no application for a theater or church use, such reuse is unlikely and therefore considered infeasible.

XIII. STATEMENT OF OVERRIDING CONSIDERATIONS FOR THE PROJECT

The Board of Supervisors finds that implementation of the Golden Gate Theater Re-Use Project will result in the occurrence of unavoidable significant environmental effects in the area of cultural resources. Pursuant to Section 21081 of Public Resources Code and Section 15093 of the CEQA Guidelines, the Board of Supervisors has determined that specific economic, legal, social, technological, or other benefits of the Golden Gate Theater Re-Use Project outweigh the unavoidable adverse environmental effects of the Project. Accordingly, the Board of Supervisors hereby adopts the Statement of Overriding Considerations, which is incorporated by reference and attached as Exhibit B to these Findings.

XIV. FINDING REGARDING THE MITIGATION MONITORING AND REPORTING PLAN

Pursuant to Public Resources Code Section 21081.6 the Board of Supervisors, in adopting these Findings, also approves the Mitigation Monitoring and Reporting Program (MMRP), attached hereto as Exhibit A, for the Project. The Board of Supervisors will use the MMRP to track compliance with Project mitigation measures. The MMRP will remain available for public review during the compliance period. The MMRP is also found in Section VII of the Final EIR.

XV. CERTIFICATION OF THE FINAL EIR

Pursuant to Public Resources Code Section 21082.1(c), the Los Angeles County Board of Supervisors herby CERTIFIES and FINDS that:

1. The Final EIR, State Clearinghouse No. 2006051069, has been completed in compliance with CEQA;
2. The Final EIR has been presented to the Los Angeles County Board of Supervisors, which has independently reviewed and analyzed the information contained in the Final EIR prior to acting on the Project;
3. The Final EIR reflects the County's independent judgment and analysis.

HISTORIC PRESERVATION & DEMOLITION MITIGATION MEASURES

18662 MacArthur Blvd.
Ste.200
Irvine, California 92612
(949) 798-3838
www.rkaa.com

ROBERT KUBICEK
Architects And Associates, Inc.

LICENSED ARCHITECT
CRAIG JOHNSON
NO. C12434
STATE OF CALIFORNIA

COPYRIGHT 2011 , ALL RIGHTS RESERVED. ROBERT KUBICEK ARCHITECTS AND ASSOC, INC. THIS DRAWING IS AN INSTRUMENT OF SERVICE. IT IS THE PROPERTY OF ROBERT KUBICEK ARCHITECTS AND ASSOC, INC. AND MAY NOT BE REPRODUCED, OR REPRODUCTION HERE OF USED, WITHOUT WRITTEN PERMISSION OF THE ARCHITECT.

date:	
10/4/10	Bldg. Dept. Submittal
10/15/10	Health Dept. Submittal
1/6/11	Chattel Architecture Submittal
1/27/11	Chattel Architecture Submittal

NOTICE OF ALTERNATE BILLING OR PAYMENT CYCLE: THIS CONTRACT MAY ALLOW THE OWNER TO REQUIRE THE SUBMISSION OF BILLINGS OR ESTIMATES IN BILLING CYCLES OTHER THAN THIRTY DAYS. THIS CONTRACT MAY ALLOW THE OWNER TO MAKE PAYMENT ON SOME ALTERNATIVE SCHEDULE AFTER CERTIFICATION AND APPROVAL OF BILLING AND ESTIMATES. A WRITTEN DESCRIPTION OF SUCH OTHER BILLING AND/OR CYCLE APPLICABLE TO THE PROJECT IS AVAILABLE FROM THE OWNER AT THE OFFICES OF

OR HIS DESIGNATED AGENT SHALL PROVIDE THIS WRITTEN DESCRIPTION ON REQUEST

DEVELOPER:
CHARLES COMPANY
9034 W. SUNSET BLVD.
WEST HOLLYWOOD
CA 90069
TEL (310) 247-0900
FAX (310) 247-1525

CVS pharmacy
STORE #4524
909 S. ATLANTIC BLVD
LOS ANGELES, CA

design RKA
drawn RKA
check RKA

sheet HMM- 4
of
job 09151

CVS/pharmacy

STORE NUMBER: 49557

WHITTIER BOULEVARD AND ATLANTIC BOULEVARD
LOS ANGELES, CALIFORNIA 90022

THOMAS GUIDE PAGE 675, GRID H1

PRIOR ADDRESS 909 S. ATLANTIC BLVD. LOS ANGELES, CA 90022
NEW ADDRESS 5176 E. WHITTIER BLVD. LOS ANGELES, CA 90022
APN 5245-1-19
CONDITIONAL USE PERMIT (CUP) NO. 200800136

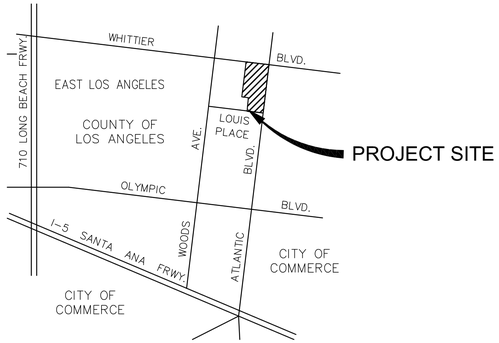

VICINITY MAP
NOT TO SCALE

PUBLIC UTILITIES/AGENCIES:

(CONTACTS TO BE VERIFIED DURING DESIGN)

SEWER:

LA COUNTY DEPT. OF PUBLIC WORKS
SEWER MAINTENANCE DIVISION
1000 SOUTH FREMONT AVENUE, 4TH FLOOR
ALHAMBRA, CA 91803
NICK AGBOBU
(626) 300-

WATER:

CALIFORNIA WATER SERVICE
3316 WEST BEVERLY BLVD.
MONTEBELLO, CA 90640
DAVID KARRAKER
(323) 722-8601

ELECTRICITY AND STREET LIGHTS:

SOUTHERN CALIFORNIA EDISON CO.
1000 POTRERO GRANDE DRIVE
MONTEREY PARK, CA 92754
REGINA GONZALES
(323) 720-5270

NATURAL GAS:

THE GAS COMPANY
303 SOUTH WOODS AVENUE
LOS ANGELES, CA 90022
BUTCH RUIZ
(310) 605-4105

TELEPHONE/COMMUNICATIONS:

AT&T
8623 GRAND AVENUE
ROSEMEAD, CA 91770-1220
DENNIS TERRAZONE
(626) 570-7633

PROJECT DEVELOPMENT APPROVAL:

LA COUNTY DEPT. OF PUBLIC WORKS
LAND DEVELOPMENT DIVISION
900 S. FREMONT AVE., 3RD FLOOR
ALHAMBRA, CA 91808
(626) 458-4921 ANDY N. NARAG/ REUBEN CRUZ

STREET IMPROVEMENTS & PERMITS:

LA COUNTY DEPT. OF PUBLIC WORKS
CONSTRUCTION DIVISION
900 S. FREMONT AVE., 8TH FLOOR
ALHAMBRA, CA 91803
(626) 458-3129

GRADING & DRAINAGE

LA COUNTY DEPT. OF PUBLIC WORKS
BUILDING & SAFETY DIVISION
EAST LOS ANGELES OFFICE
4801 E. 3RD ST.
LOS ANGELES, CA 90022
LISA ECKART
(323) 881-7030

TRAFFIC SIGNAL & STREET LIGHTS:

LA COUNTY DEPT. OF PUBLIC WORKS
TRAFFIC & LIGHTING DIVISION
1000 S. FREMONT AVE., 4TH FLOOR
ALHAMBRA, CA 91803
TRAFFIC: JEFFREY F. PLETYAK
(626) 300-4721
LIGHTING: JEFF CHOW
(626) 300-4753

RECYCLE PROGRAM:
LA COUNTY DEPT. OF PUBLIC WORKS
ENVIRONMENTAL PROGRAMS DIVISION
900 S. FREMONT AVE. - ANNEX
ALHAMBRA, CA 91803
(626) 458-3551

RED LIGHT CAMERA:

AFFILIATED COMPUTER SERVICES INC.
606 S. OLIVE ST., STE. 2300
LOS ANGELES, CA 90014
DAVID LEARY
(213) 439-6233

DEMOLITION:

SOUTH COAST AIR QUALITY
MANAGEMENT DISTRICT
21865 COPLEY DRIVE
DIAMOND BAR, CA 91765-4182
(909) 396-2000

FIRE DEPARTMENT:
LA COUNTY FIRE DEPT.
5823 RICKENBACKER RD
COMMERCE, CA 90040

BUILDING FIRE PROTECTION SYSTEM:

BCFP
22715 VICTORY BLVD.
WEST HILLS, CA 91307
ASHGAN SHAHBODAGHLOO
(818) 610-3062

SITE OWNER:

M.&A. GABEE, CLP
C/O CHARLES COMPANY
9034 W. SUNSET BLVD.
WEST HOLLYWOOD, CA 90069
(310) 247-0900

SITE DEVELOPER:

CHARLES COMPANY
9034 W. SUNSET BLVD.
WEST HOLLYWOOD, CA 90069
(310) 247-0900
JACK KURCHIAN

TENANT:

CVS REALTY CO.
777 S. HARBOR BLVD., STE. E163
LA HABRA, CA 90631
(714) 681-5577
ROBERT JAYE
MACK MILLER

BUILDING ARCHITECT:

ROBERT KUBICEK
18662 MAC ARTHUR BLVD., STE 200
IRVINE, CA 92612
(949) 798-3838
LARRY SLONIM
CRAIG JOHNSON

CIVIL ENGINEER:

AAE INC.
1815 E. HEIM AVENUE, STE. 100
ORANGE, CA 92865
(714) 940-0100
KEN PUTNAM, CIVIL ENGINEER
(818) 808-5442

STRUCTURAL ENGINEER:

LEE & LEE
3550 WILSHIRE BLVD, STE. 480
LOS ANGELES, CA 90010
(213) 351-0034
SANG Y. LEE

MECHANICAL/ELECTRICAL ENGINEER:

RPM ENGINEERS, INC.
102 DISCOVERY
IRVINE, CA 92618
(949)450-1229
MAURICE E. LEE
LAN NGUYEN

HISTORIC ARCHITECT:

CHATTEL ARCHITECTURE
13417 VENTURA BLVD.
SHERMAN OAKS, CA 91423
(818) 788-7954
ROBERT J. CHATTEL

BUS SHELTERS/ BENCHES:

LA COUNTY DEPT. OF PUBLIC WORKS
LAGO BUS
900 S. FREMONT AVENUE
ALHAMBRA, CA 91803
SHELTERS - FRED WONG
(626) 458-3907 (9TH FLOOR)
BENCHES - ED GERLITS
(626) 458-4953 (8TH FLOOR)

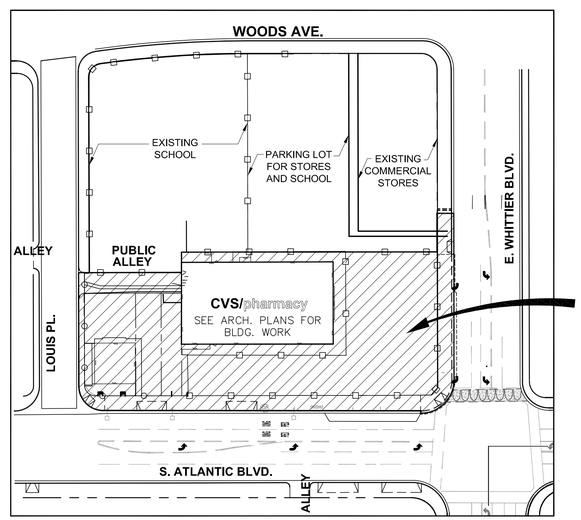

PROJECT CIVIL WORK LOCATION ONLY

SEE PLANS OF ARCHITECT AND OTHERS FOR WORK ON BLDG.
SEE PLANS FOR LANDSCAPING AND IRRIGATION SYSTEM AND PARKING LOT LIGHTING.
BY OTHERS, SEE PLAN BY OTHERS FOR MONUMENT SIGN, POLE SIGN AND FIRE PROTECTION SERVICE AND FIRE DEPARTMENT PUMPER CONNECTION.
SEE PLANS BY CWS FOR WATER SYSTEM FACILITIES.

LOCATION MAP
NOT TO SCALE

INDEX OF DRAWINGS

SHEET NO.	DESCRIPTION
CIVIL ENGINEERING	
C-1	TITLE SHEET
C-2	GENERAL NOTES
C-3	WHITTIER BLVD. DEMOLITION PLAN
C-4	SITE AND ATLANTIC BLVD. DEMOLITION PLAN
C-5	LOUIS PLACE/SOUTH DEMOLITION PLAN
C-6	HORIZONTAL CONTROL PLAN/NORTH
C-7	HORIZONTAL CONTROL PLAN/SOUTH
C-8	WHITTIER BLVD. IMPROVEMENT PLAN
C-9	ATLANTIC BLVD. IMPROVEMENT PLAN
C-10	LOUIS PLACE IMPROVEMENT PLAN
C-11	GRADING CONSTRUCTION PLAN - NORTH
C-12	GRADING CONSTRUCTION PLAN - SOUTH
C-13	SITE IMPROVEMENTS PLAN/NORTH
C-14	SITE IMPROVEMENTS PLAN/SOUTH
C-15	DETAILS
C-16	STREET LIGHTING PLAN
C-17	DETAILS
C-18	SITE AND STREET STRIPING PLAN
C-19	TRAFFIC SIGNAL MODIFICATION PLAN

PROFESSIONAL CIVIL ENGINEER'S NOTE:

THE PLANS AND SPECIFICATIONS HAVE BEEN PREPARED FOR THE CIVIL WORK BY AAE, INC USING AVAILABLE RECORD PLANS AND MAPS PROVIDED BY OWNER AND BASED ON FIELD RECONNAISSANCE OF EXISTING CONDITIONS AND INFORMATION & PLANS PROVIDED BY OTHER PROFESSIONS EMPLOYED BY THE SITE DEVELOPER. KNOWN UTILITIES AND OWNERS OF OTHER STRUCTURES ON THE PROPERTY RIGHT OF WAYS HAVE BEEN GIVEN WRITTEN NOTICE OF THE PROJECT. HOWEVER, AAE, M&A GABAEE, CHARLES COMPANY AND CVS ARE NOT RESPONSIBLE FOR THE TOTAL ACCURACY AND/OR CORRECTNESS OF THE SHOWN INFORMATION. THE CONTRACTOR BY SIGNING THE CONSTRUCTION CONTRACT FOR THIS PROJECT ACCEPTS AND ASSUMES FULL RESPONSIBILITY FOR THE WORK AND ITS IMPACT ON THE EXISTING FACILITIES SHOWN OR NOT SHOWN ON THESE PLANS AND DESCRIBED IN THE SPECIFICATIONS.

THE CONTRACTOR IS RESPONSIBLE TO MAKE HIS OWN INVESTIGATION AND INSPECTION INCLUDING POT HOLING AND SUCH OTHER METHODS HE DEEMS NECESSARY TO ALLOW HIM TO PROCEED ON THE CONSTRUCTION OF THIS PROJECT IN COMPLIANCE WITH THE LAWS, ORDINANCES AND REGULATIONS APPLICABLE TO THE PROJECT, INCLUDING STATE SAFETY ORDERS.

THE CONTRACTOR IS RESPONSIBLE FOR PROVIDING ANY SURVEYS REQUIRED TO ESTABLISH HORIZONTAL AND VERTICAL CONTROLS PRIOR AND DURING CONSTRUCTION, AND TO REPLACE DISTURBED OR COVERED EXISTING SURVEY MONUMENTS.

UNAUTHORIZED CHANGES AND USES:

CAUTION: THE ENGINEER PREPARING THESE PLANS WILL NOT BE RESPONSIBLE FOR, OR LIABLE FOR, UNAUTHORIZED CHANGES TO OR USES OF THESE PLANS.

ATTENTION: IF, THIS MAP IS PROVIDED IN AN ELECTRONIC FORMAT (ON COMPUTER DISK) AS A COURTESY TO CLIENT. THE DELIVERY OF THE ELECTRONIC FILE DOES NOT CONSTITUTE THE DELIVERY OF OUR PROFESSIONAL WORK PRODUCT. THE SIGNED PAPER PRINT DELIVERED WITH THIS ELECTRONIC FILE CONSTITUTES OUR PROFESSIONAL WORK PRODUCT, AND IN THE EVENT THE ELECTRONIC FILE IS ALTERED, THE PRINT MUST BE REFERRED TO, FOR THE ORIGINAL AND CORRECT SURVEY INFORMATION. WE SHALL NOT BE RESPONSIBLE FOR ANY MODIFICATIONS MADE TO THE ELECTRONIC FILE, OR FOR ANY PRODUCTS DERIVED FROM THE ELECTRONIC FILE WHICH ARE NOT REVIEWED, SIGNED AND SEALED BY AAE.

BASIS OF BEARINGS:

THE BEARING OF N14°24'00"E OF THE CENTERLINE OF ATLANTIC AVENUE PER TRACT NO. 9814 FILED IN BOOK 128 PAGES 51 & 52 OF MAPS, RECORDS OF LOS ANGELES COUNTY WAS TAKEN AS THE BASIS OF BEARINGS FOR THIS SURVEY.

AAE IS NOT RESPONSIBLE FOR THE CONTENT AND ACCURACY OF THE GRAPHICS WITHIN THESE ELECTRONIC FILES. ANYONE USING THESE FILES ASSUMES COMPLETE RESPONSIBILITY THERFOR.

811 Know what's below. Call before you dig.

1/27/11
Chattel Architecture Submittal

User = Shawnt Babakhanian
Date = Thursday, January 27, 2011 11:50:17 AM
Filename = M:\Charles Company\9066_02 AO\Golden Gate Theater - PS&E\Sheets\Final Design\C01-TLS-CV01-606602.dwg

CIVIL ENGINEER OF RECORD

CONSULTANT:

AAE INCORPORATED
Municipal Engineering, Programs & Services
1815 E. Heim Avenue, Suite 100
Orange, CA 92865
Tel: (714) 940-0100 Fax: (714) 940-0700
www.aaeinc.com

REGISTERED PROFESSIONAL ENGINEER
KENNETH R. PUTNAM
No. 11733
Exp. 12/31/12
CIVIL
STATE OF CALIFORNIA

CVS pharmacy

STORE NUMBER: 49557
WHITTIER BLVD. AND ATLANTIC BLVD.
LOS ANGELES, CALIFORNIA 90022

DEVELOPER:

CHARLES COMPANY
9034 WEST SUNSET BLVD.
WEST HOLLYWOOD, CA 90069
TEL (310)247-0900
FAX (310) 347-1525

REVISIONS:

DRAWING BY:
DATE:
JOB NUMBER:
TITLE:
TITLE SHEET
SHEET NUMBER:
C-1
COMMENTS:
NOT RELEASED FOR CONSTRUCTION

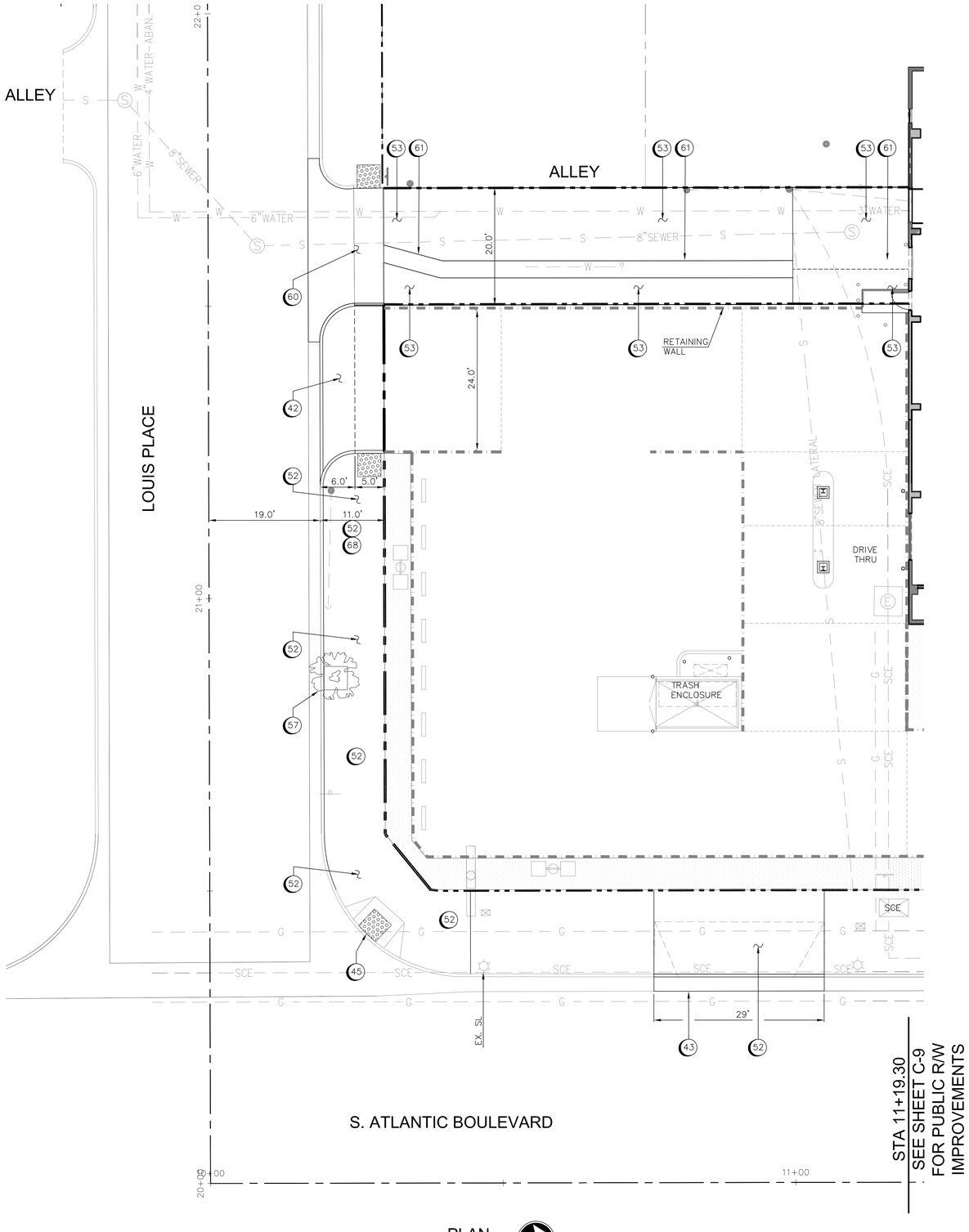

PLAN
SCALE 1"=10'

CONSTRUCTION NOTES:

42 CONSTRUCT DRIVEWAY APPROACH PER SPPWC 110-2 TYPE B.

43 CONSTRUCT NEW CURB AND GUTTER BARRIER PER SPPWC STD. PLAN NO. 120-2 TYPE A2-8(200).

45 CURB RAMP – SPPWC 111-4 TYPE 3.

52 NEW SIDEWALK REPLACEMENT PER SPPWC 113-2.

53 NEW AC PAVEMENT.

57 NEW TREE WELL WITH NEW PALM TREE TO MATCH EXISTING SPPWC 519-3, 520-4, 518-3 – SEE DETAIL 12 ON SHEET C-17.

60 REPLACE ALLEY INTERSECTION PER SPPWC 130-2.

61 CONSTRUCT ALLEY LONGITUDINAL GUTTER SPPWC 122-2.

68 2" WATER METER.

NOTES:

1. SEE SHEET C-11 AND C-12 FOR ONSITE GRADING.
2. SEE SHEET C-13 FOR ONSITE IMPROVEMENTS
3. SEE GRADING PLAN FOR CURB DRAINS.

1/27/11
Chattel Architecture Submittal

10 5 0 10 20
SCALE IN FEET
1 inch = 10 ft.

Know what's below. Call before you dig.

User = Shawn Babakhanian
Date = Thursday, January 27, 2011 12:01:56 PM
Filename = M:\Charles Company\6066_02 AOT\Golden Gate Theater - PS&E\Sheets\Final Design\C09-SIP-CV01-606602.dwg

CIVIL ENGINEER OF RECORD

CONSULTANT:

AAE INCORPORATED
Municipal Engineering, Programs & Services
1815 E. Heim Avenue, Suite 100
Orange, CA 92865
Tel: (714) 940-0100 Fax: (714) 940-0700
www.aaeinc.com

REGISTERED PROFESSIONAL ENGINEER
KENNETH R. PUTNAM
No. 11733
Exp. 12/31/12
CIVIL
STATE OF CALIFORNIA

CVS pharmacy

STORE NUMBER: 49557
WHITTIER BLVD. AND ATLANTIC BLVD.
LOS ANGELES, CALIFORNIA 90022

DEVELOPER:
CHARLES COMPANY
9034 WEST SUNSET BLVD.
WEST HOLLYWOOD, CA 90069
TEL (310)247-0900
FAX (310) 347-1525

REVISIONS:

DRAWING BY:
DATE:
JOB NUMBER:
TITLE: LOUIS PLACE PUBLIC R/W IMPROVEMENT PLAN
SHEET NUMBER: C-10

COMMENTS:
NOT RELEASED FOR CONSTRUCTION

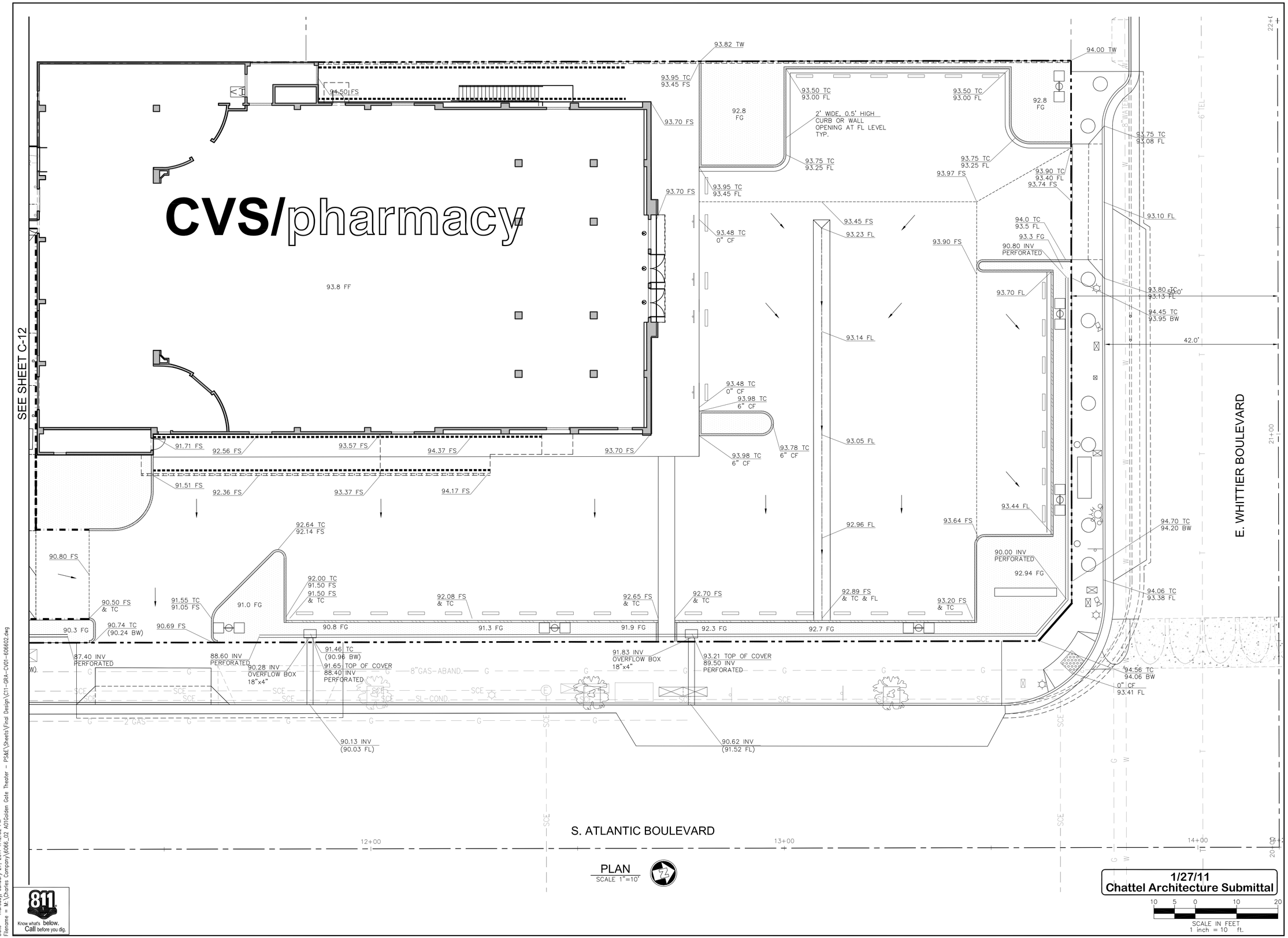

User = Shawnt Babakhanian
Date = Thursday, January 27, 2011 1:12:32 PM
Filename = M:\Charles Company\6566_02 AB\Golden Gate Theater - PG&E\Sheets\Final Design\C11-GRA-CV01-606602.dwg

811 Know what's below. Call before you dig.

CIVIL ENGINEER OF RECORD

CONSULTANT:

AAE INCORPORATED
Municipal Engineering, Programs & Services
1815 E. Heim Avenue, Suite 100
Orange, CA 92865
Tel: (714) 940-0100 Fax: (714) 940-0700
www.aaeinc.com

REGISTERED PROFESSIONAL ENGINEER
KENNETH R. PUTNAM
No. 11733
Exp. 12/31/12
CIVIL
STATE OF CALIFORNIA

CVS pharmacy

STORE NUMBER: 49557
WHITTIER BLVD. AND ATLANTIC BLVD.
LOS ANGELES, CALIFORNIA 90022

DEVELOPER:
CHARLES COMPANY
9034 WEST SUNSET BLVD.
WEST HOLLYWOOD, CA 90069
TEL (310)247-0900
FAX (310) 347-1525

REVISIONS:

DRAWING BY:
DATE:
JOB NUMBER:
TITLE:
GRADING CONSTRUCTION PLAN - NORTH
SHEET NUMBER:
C-11

COMMENTS:
NOT RELEASED FOR CONSTRUCTION

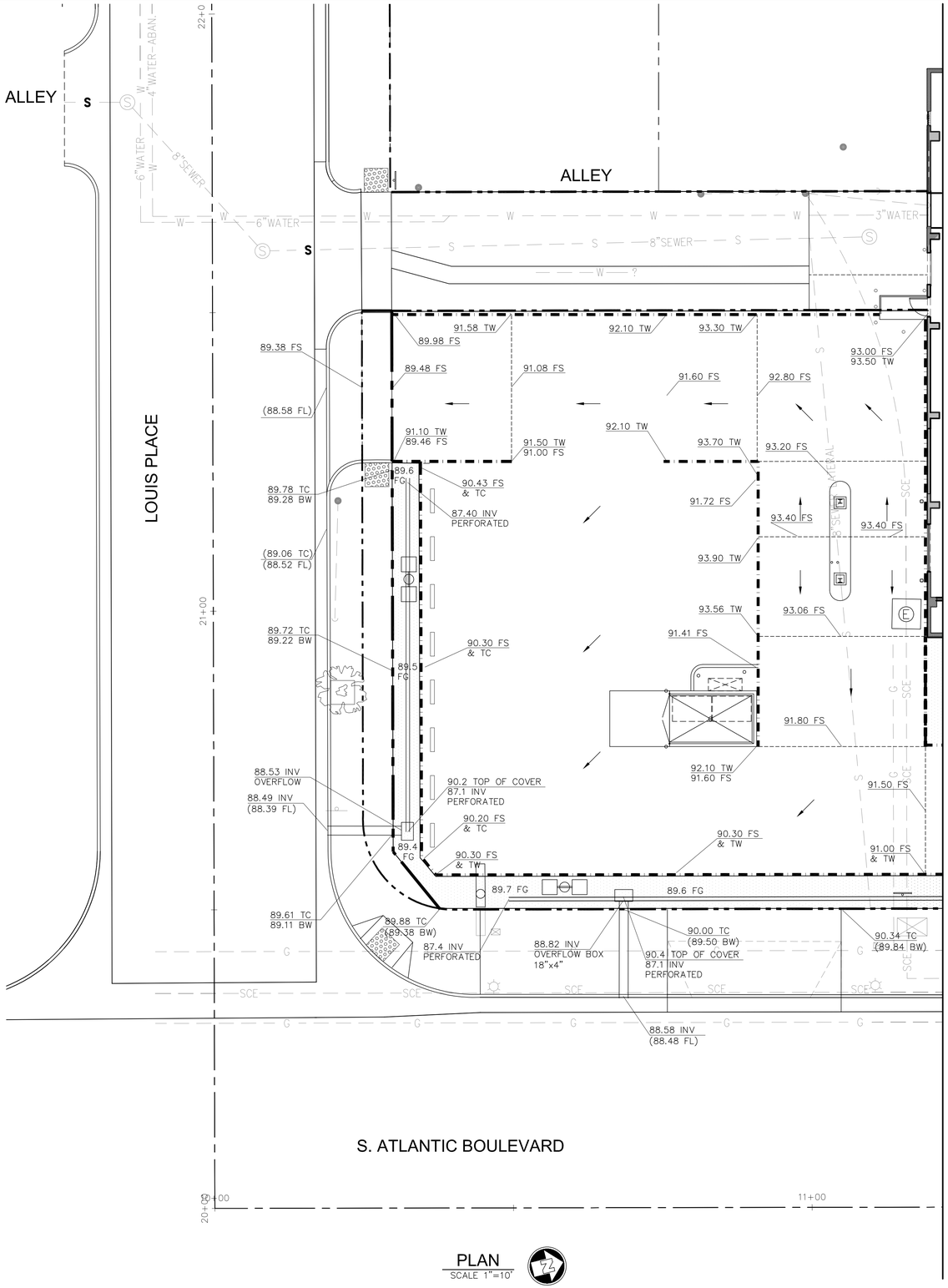

PLAN
SCALE 1"=10'

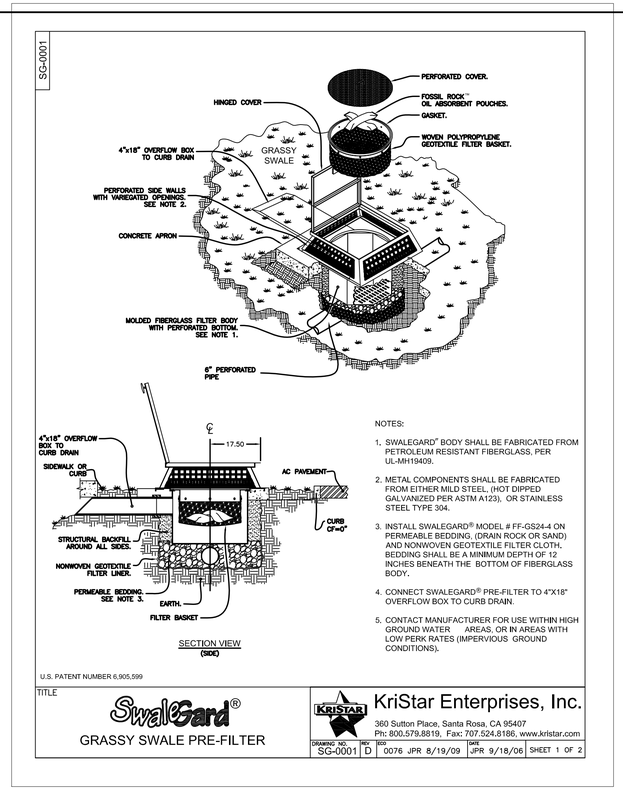

NOTES:

1. SWALEGARD® BODY SHALL BE FABRICATED FROM PETROLEUM RESISTANT FIBERGLASS, PER UL-MH19409.
2. METAL COMPONENTS SHALL BE FABRICATED FROM EITHER MILD STEEL, (HOT DIPPED GALVANIZED PER ASTM A123), OR STAINLESS STEEL TYPE 304.
3. INSTALL SWALEGARD® MODEL # FF-GS24-4 ON PERMEABLE BEDDING, (DRAIN ROCK OR SAND) AND NONWOVEN GEOTEXTILE FILTER CLOTH, BEDDING SHALL BE A MINIMUM DEPTH OF 12 INCHES BENEATH THE BOTTOM OF FIBERGLASS BODY.
4. CONNECT SWALEGARD® PRE-FILTER TO 4"X18" OVERFLOW BOX TO CURB DRAIN.
5. CONTACT MANUFACTURER FOR USE WITHIN HIGH GROUND WATER AREAS, OR IN AREAS WITH LOW PERK RATES (IMPERVIOUS GROUND CONDITIONS).

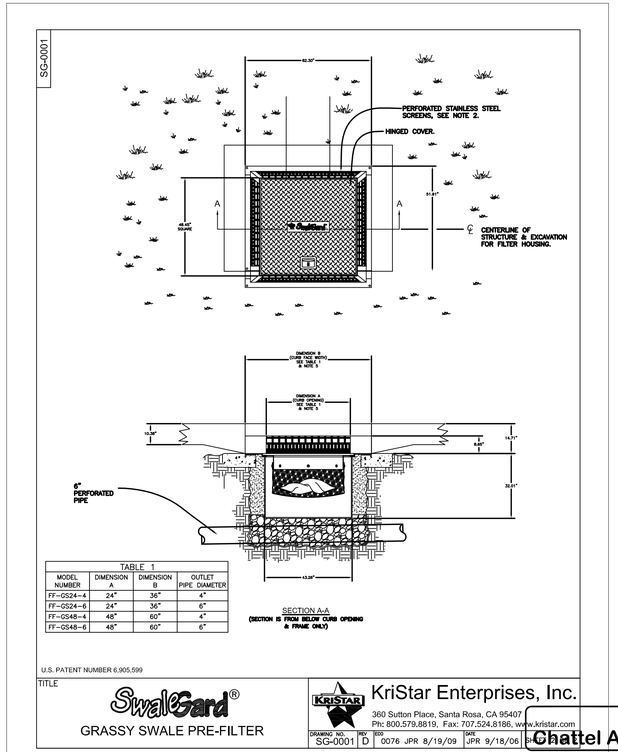

1/27/11
Chattel Architecture Submittal

10 5 0 10 20
SCALE IN FEET
1 inch = 10 ft.

CIVIL ENGINEER OF RECORD

CONSULTANT:

AAE INCORPORATED
Municipal Engineering, Programs & Services
1815 E. Heim Avenue, Suite 100
Orange, CA 92865
Tel: (714) 940-0100 Fax: (714) 940-0700
www.aaeinc.com

REGISTERED PROFESSIONAL ENGINEER
KENNETH R. PUTNAM
No. 11733
Exp. 12/31/12
CIVIL
STATE OF CALIFORNIA

CVS pharmacy

STORE NUMBER: 49557
WHITTIER BLVD. AND ATLANTIC BLVD.
LOS ANGELES, CALIFORNIA 90022

DEVELOPER:
CHARLES COMPANY
9034 WEST SUNSET BLVD.
WEST HOLLYWOOD, CA 90069
TEL (310)247-0900
FAX (310) 347-1525

REVISIONS:

DRAWING BY:
DATE:
JOB NUMBER:
TITLE:
GRADING CONSTRUCTION PLAN - SOUTH
SHEET NUMBER:
C-12

COMMENTS:
NOT RELEASED FOR CONSTRUCTION

811 Know what's below. Call before you dig.

User = Shawnt Babakhanian
Date = Thursday, January 27, 2011 1:13:46 PM
Filename = M:\Charles Company\0686_02 AOT\Golden Gate Theater - PS&E\Sheets\Final Design\C11-GRA-CV01-606602.dwg

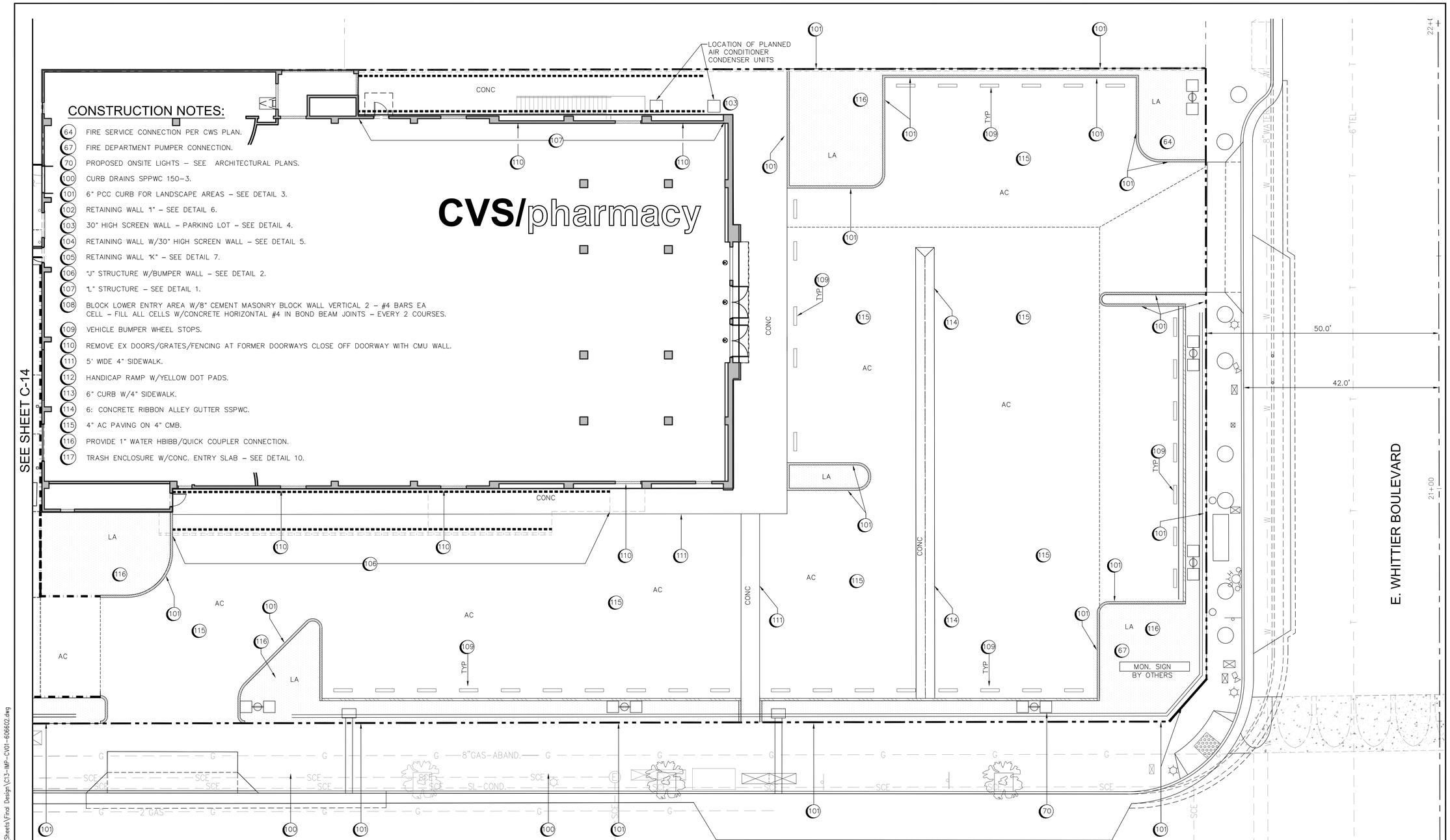

CONSTRUCTION NOTES:

64 FIRE SERVICE CONNECTION PER CWS PLAN.
67 FIRE DEPARTMENT PUMPER CONNECTION.
70 PROPOSED ONSITE LIGHTS – SEE ARCHITECTURAL PLANS.
100 CURB DRAINS SPPWC 150–3.
101 6" PCC CURB FOR LANDSCAPE AREAS – SEE DETAIL 3.
102 RETAINING WALL "1" – SEE DETAIL 6.
103 30" HIGH SCREEN WALL – PARKING LOT – SEE DETAIL 4.
104 RETAINING WALL W/30" HIGH SCREEN WALL – SEE DETAIL 5.
105 RETAINING WALL "K" – SEE DETAIL 7.
106 "J" STRUCTURE W/BUMPER WALL – SEE DETAIL 2.
107 "L" STRUCTURE – SEE DETAIL 1.
108 BLOCK LOWER ENTRY AREA W/8" CEMENT MASONRY BLOCK WALL VERTICAL 2 – #4 BARS EA CELL – FILL ALL CELLS W/CONCRETE HORIZONTAL #4 IN BOND BEAM JOINTS – EVERY 2 COURSES.
109 VEHICLE BUMPER WHEEL STOPS.
110 REMOVE EX DOORS/GRATES/FENCING AT FORMER DOORWAYS CLOSE OFF DOORWAY WITH CMU WALL.
111 5' WIDE 4" SIDEWALK.
112 HANDICAP RAMP W/YELLOW DOT PADS.
113 6" CURB W/4" SIDEWALK.
114 6: CONCRETE RIBBON ALLEY GUTTER SSPWC.
115 4" AC PAVING ON 4" CMB.
116 PROVIDE 1" WATER HBIBB/QUICK COUPLER CONNECTION.
117 TRASH ENCLOSURE W/CONC. ENTRY SLAB – SEE DETAIL 10.

NOTE:

1. FOR LIGHT STANDARDS – SEE LIGHTING PLAN.
2. SEE LANDSCAPE PLAN FOR THAT WORK AND IRRIGATION SYSTEM.
3. SEE FIRE PROTECTION PLAN FOR LOCATION OF FIRE DEPT. CONNECTION.

PLAN
SCALE 1"=10'

LEGENDS:

AC – ASPHALT CONCRETE
CONC – CONCRETE
LA – LANDSCAPE AREA

1/27/11
Chattel Architecture Submittal

SCALE IN FEET
1 inch = 10 ft.

Know what's below. Call before you dig.

User = Shawnt Babakhanian
Date = Thursday, January 27, 2011 1:15:24 PM
Filename = M:\Charles Company\6066_02 AOT\Golden Gate Theater – PS&E\Sheets\Final Design\C13-MP-CVD1-606602.dwg

CIVIL ENGINEER OF RECORD

CONSULTANT:

AAE INCORPORATED
Municipal Engineering, Programs & Services
1815 E. Heim Avenue, Suite 100
Orange, CA 92865
Tel: (714) 940-0100 Fax: (714) 940-0700
www.aaeinc.com

REGISTERED PROFESSIONAL ENGINEER
KENNETH R. PUTNAM
No. 11733
Exp. 12/31/12
CIVIL
STATE OF CALIFORNIA

CVS pharmacy

STORE NUMBER: 49557
WHITTIER BLVD. AND ATLANTIC BLVD.
LOS ANGELES, CALIFORNIA 90022

DEVELOPER:
CHARLES COMPANY
9034 WEST SUNSET BLVD.
WEST HOLLYWOOD, CA 90069
TEL (310)247–0900
FAX (310) 347–1525

REVISIONS:

DRAWING BY:
DATE:
JOB NUMBER:
TITLE: SITE IMPROVEMENTS PLAN/NORTH
SHEET NUMBER: C-13

COMMENTS:
NOT RELEASED FOR CONSTRUCTION

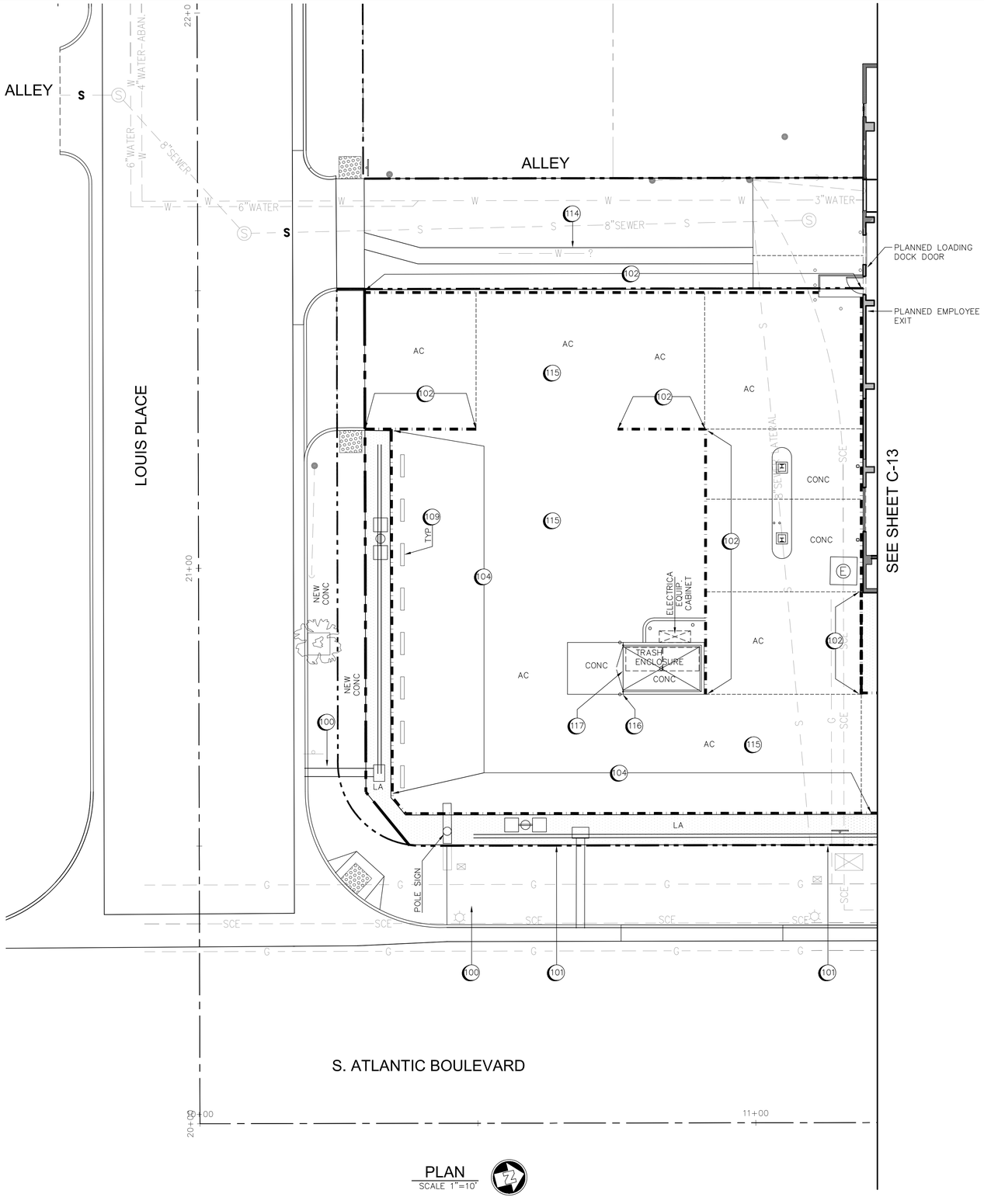

PLAN
SCALE 1"=10'

CONSTRUCTION NOTES:

100 CURB DRAINS SPPWC 150-3.
101 6" PCC CURB FOR LANDSCAPE AREAS - SEE DETAIL 3.
102 RETAINING WALL "I" - SEE DETAIL 6.
103 30" HIGH SCREEN WALL - PARKING LOT - SEE DETAIL 4.
104 RETAINING WALL W/30" HIGH SCREEN WALL - SEE DETAIL 5.
105 RETAINING WALL "K" - SEE DETAIL 7.
106 "J" STRUCTURE W/BUMPER WALL - SEE DETAIL 2.
107 "L" STRUCTURE - SEE DETAIL 1.
108 BLOCK LOWER ENTRY AREA W/8" CEMENT MASONRY BLOCK WALL VERTICAL 2 - #4 BARS EA CELL - FILL ALL CELLS W/CONCRETE HORIZONTAL #4 IN BOND BEAM JOINTS - EVERY 2 COURSES.
109 VEHICLE BUMPER WHEEL STOPS.
110 REMOVE EX DOORS/GRATES/FENCING AT FORMER DOORWAYS CLOSE OFF DOORWAY WITH CMU WALL.
111 5' WIDE 4" SIDEWALK.
112 HANDICAP RAMP W/YELLOW DOT PADS.
113 6" CURB W/4" SIDEWALK.
114 6: CONCRETE RIBBON ALLEY GUTTER SSPWC.
115 4" AC PAVING ON 4" CMB.
116 PROVIDE 1" WATER HBIBB/QUICK COUPLER CONNECTION.
117 TRASH ENCLOSURE W/CONC. ENTRY SLAB - SEE DETAIL 10.

NOTE:

1. FOR LIGHT STANDARDS - SEE LIGHTING PLAN.
2. SEE LANDSCAPE PLAN FOR THAT WORK AND IRRIGATION SYSTEM.
3. SEE FIRE PROTECTION PLAN FOR LOCATION OF FIRE DEPT. CONNECTION.

1/27/11
Chattel Architecture Submittal

10 5 0 10 20
SCALE IN FEET
1 inch = 10 ft.

CIVIL ENGINEER OF RECORD

CONSULTANT:

AAE INCORPORATED
Municipal Engineering, Programs & Services
1815 E. Heim Avenue, Suite 100
Orange, CA 92865
Tel: (714) 940-0100 Fax: (714) 940-0700
www.aaeinc.com

REGISTERED PROFESSIONAL ENGINEER
KENNETH R. PUTNAM
No. 11733
Exp. 12/31/12
CIVIL
STATE OF CALIFORNIA

CVS pharmacy

STORE NUMBER: 49557
WHITTIER BLVD. AND ATLANTIC BLVD.
LOS ANGELES, CALIFORNIA 90022

DEVELOPER:
CHARLES COMPANY
9034 WEST SUNSET BLVD.
WEST HOLLYWOOD, CA 90069
TEL (310)247-0900
FAX (310) 347-1525

REVISIONS:

DRAWING BY:
DATE:
JOB NUMBER:
TITLE: SITE IMPROVEMENTS PLAN/SOUTH
SHEET NUMBER: C-14
COMMENTS: NOT RELEASED FOR CONSTRUCTION

811 Know what's below. Call before you dig.

User = Shawnt Babakhanian
Date = Thursday, January 27, 2011 1:16:23 PM
Filename = M:\Charles Company\6865_02 AOT\Golden Gate Theater - PS&E\Sheets\Final Design\C13-IMP-C\01-606602.dwg

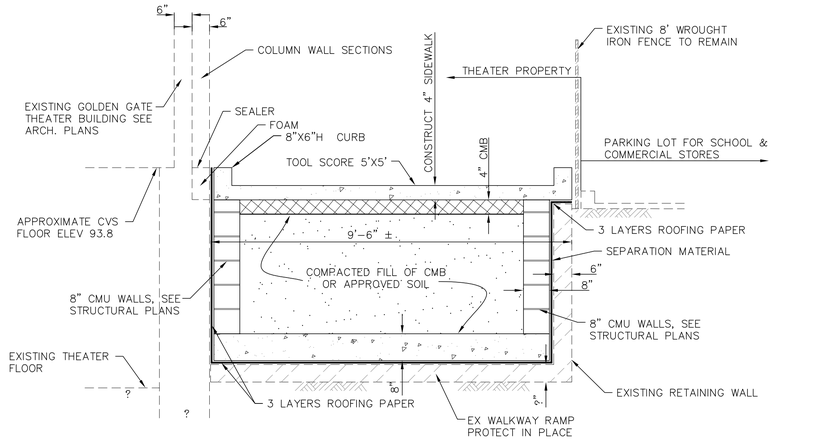

NOT TO SCALE

1 X-SECTION OF STRUCTURE - WEST SIDE OF THEATER

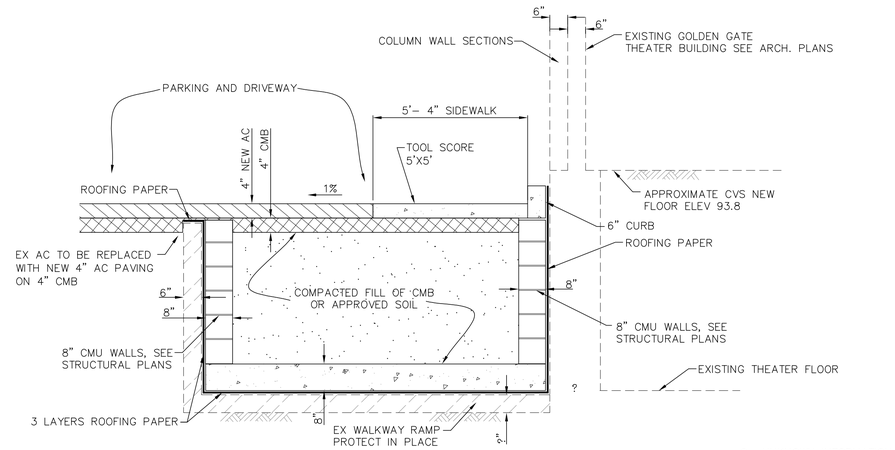

NOT TO SCALE

2 X-SECTION OF STRUCTURE - EAST SIDE OF THEATER

3

4

5

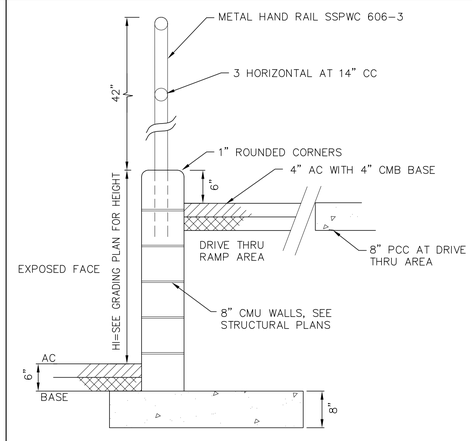

REINFORCING:

SEE STRUCTURAL PLANS

NOT TO SCALE

6 RETAINING WALL STRUCTURE, DRIVE THRU RAMPS & SOUTH PARKING LOT WALLS

NOTE:

AT REAR (SOUTH) WALL NEW EXIT DOOR, WALL TOP IS TO BE AT DOOR STEP

?= UNKNOWN INFORMATION

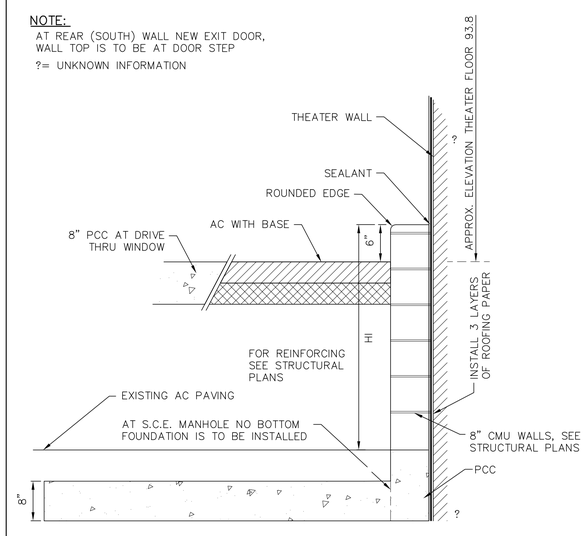

NOT TO SCALE

7 RETAINING WALL STRUCTURE FOR DRIVE THRU RAMP ADJACENT TO THEATER WALL

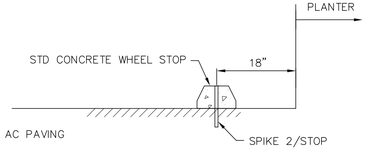

NOT TO SCALE

8 VEHICLE WHEEL BUMPER STOP

9

NOTES:

FOR REBAR IN DETAILS SEE STRUCTURAL PLANS.

LEGENDS:

- EXISTING CONCRETE
- PROPOSED AC PAVEMENT
- PROPOSED CMB
- CONCRETE IMPROVEMENT
- COMPACTED FILL OF CMB OR APPROVED SOIL

1/27/11
Chattel Architecture Submittal

Know what's below. Call before you dig.

User = Shawn Babakhanian
Date = Thursday, January 27, 2011 1:23:52 PM
Filename = M:\Charles Company\6066_02 AO\Golden Gate Theater - PS&E\Sheets\Final Design\C15-DET-CV01-606602.dwg

CIVIL ENGINEER OF RECORD

CONSULTANT:

AAE INCORPORATED

Municipal Engineering, Programs & Services

1815 E. Heim Avenue, Suite 100
Orange, CA 92865
Tel: (714) 940-0100 Fax: (714) 940-0700
www.aaeinc.com

REGISTERED PROFESSIONAL ENGINEER
KENNETH R. PUTNAM
No. 11733
Exp. 12/31/12
CIVIL
STATE OF CALIFORNIA

CVS pharmacy

STORE NUMBER: 49557

WHITTIER BLVD. AND ATLANTIC BLVD.
LOS ANGELES, CALIFORNIA 90022

DEVELOPER:

CHARLES COMPANY
9034 WEST SUNSET BLVD.
WEST HOLLYWOOD, CA 90069
TEL (310)247-0900
FAX (310) 347-1525

REVISIONS:

DRAWING BY:

DATE:

JOB NUMBER:

TITLE: DETAILS

SHEET NUMBER: C-15

COMMENTS:
NOT RELEASED FOR CONSTRUCTION

PLAN
SCALE 1"=30'

1/27/11
Chattel Architecture Submittal

30 15 0 30 60
SCALE IN FEET
1 inch = 30 ft.

User = Shawnt Babokhanian
Date = Thursday, January 27, 2011 1:25:49 PM
Filename = M:\Charles Company\606_02 AD\Golden Gate Theater - PS&E\Sheets\Final Design\C16-LIT-CV01-606602.dwg

811 Know what's below. Call before you dig.

CIVIL ENGINEER OF RECORD

CONSULTANT:

AAE INCORPORATED

Municipal Engineering, Programs & Services

1815 E. Heim Avenue, Suite 100
Orange, CA 92865
Tel: (714) 940-0100 Fax: (714) 940-0700
www.aaeinc.com

REGISTERED PROFESSIONAL ENGINEER
KENNETH R. PUTNAM
No. 11733
Exp. 12/31/12
CIVIL
STATE OF CALIFORNIA

CVS pharmacy

STORE NUMBER: 49557

WHITTIER BLVD. AND ATLANTIC BLVD.
LOS ANGELES, CALIFORNIA 90022

DEVELOPER:

CHARLES COMPANY
9034 WEST SUNSET BLVD.
WEST HOLLYWOOD, CA 90069
TEL (310)247-0900
FAX (310) 347-1525

REVISIONS:

DRAWING BY:

DATE:

JOB NUMBER:

TITLE:
STREET LIGHTING PLAN

SHEET NUMBER:
C-16

COMMENTS:
NOT RELEASED FOR CONSTRUCTION

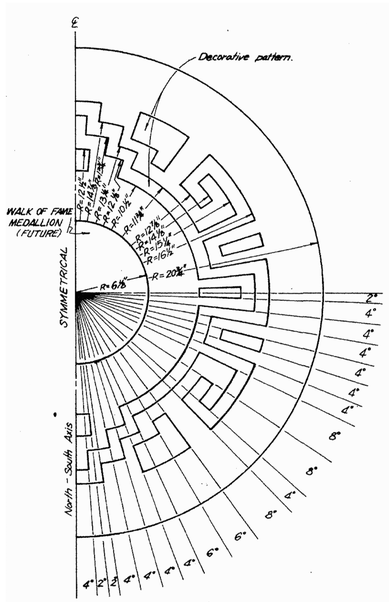

WALK OF FAME PLAQUE

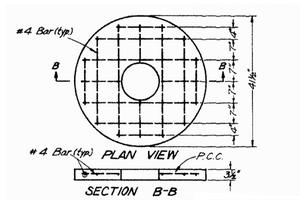

WALK OF FAME PLAQUE REINF. DETAIL
NO SCALE

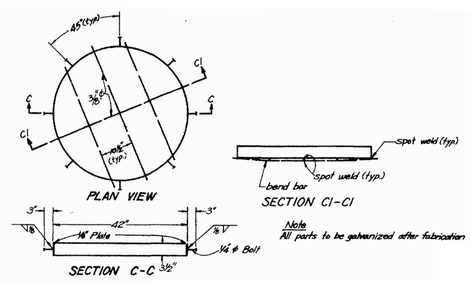

STEEL FRAME DETAIL
NO SCALE

NOTES
1. Plaque and temporary insert to be 3⅜" thick textured, colored P.C.C. (See Specs.).
2. Decorative pattern to be cast ⅛" deep and filled with Glascrete (See Specs.).
3. See detail hereon for reinforcement.
4. See detail hereon for steel frame. Frame and plaque to be supplied in matched sets.

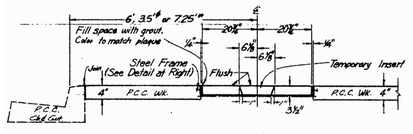

WALK OF FAME PLAQUE – TYPICAL SECTION
NO SCALE

ϕ 3.5' from sta. 105+28L to 106+84L
* 7.25' from sta. 104+52.5R to 106+84R

11	WALK OF FAME PLAQUE DETAIL

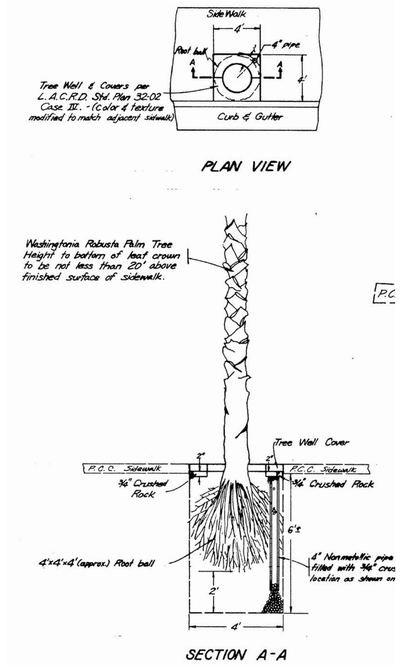

12	TREE WELL DETAIL

CURVE DATA						
CURVE	RADIUS Ft.	CENTRAL ANGLE Deg.	Min.	Sec.	LENGTH Ft.	TANGENT Ft.
a	2	40	00	00	1.40	0.73
b	6	35	00	00	3.67	1.89
c	16	15	00	00	4.19	2.11

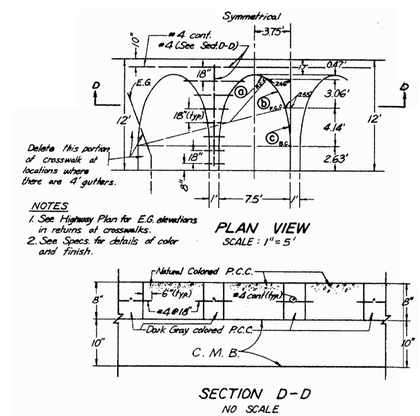

NOTES
1. See Highway Plan for E.G. elevations in returns of crosswalks.
2. See Specs. for details of color and finish.

NO SCALE

14	CROSSWALK DETAIL

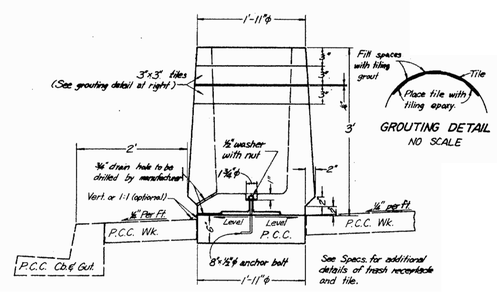

13	TRASH RECEPTACLE DETAIL

1/27/11
Chattel Architecture Submittal

Know what's below. Call before you dig.

User = Shawnt. Babakhanian
Date = Thursday, January 27, 2011 1:27:00 PM
Filename = M:\Charles Company\6566_02 AOI\Golden Gate Theater - PS&E\Sheets\Final Design\C17-DET-CV01-606602.dwg

CIVIL ENGINEER OF RECORD

CONSULTANT:

AAE INCORPORATED
Municipal Engineering, Programs & Services
1815 E. Heim Avenue, Suite 100
Orange, CA 92865
Tel: (714) 940-0100 Fax: (714) 940-0700
www.aaeinc.com

REG. STERED PROFESSIONAL ENGINEER KENNETH R. PUTNAM No. 11733 Exp. 12/31/12 CIVIL STATE OF CALIFORNIA

CVS pharmacy

STORE NUMBER: 49557
WHITTIER BLVD. AND ATLANTIC BLVD.
LOS ANGELES, CALIFORNIA 90022

DEVELOPER:
CHARLES COMPANY
9034 WEST SUNSET BLVD.
WEST HOLLYWOOD, CA 90069
TEL (310)247-0900
FAX (310) 347-1525

REVISIONS:

DRAWING BY:
DATE:
JOB NUMBER:
TITLE: DETAILS
SHEET NUMBER: C-17
COMMENTS: NOT RELEASED FOR CONSTRUCTION

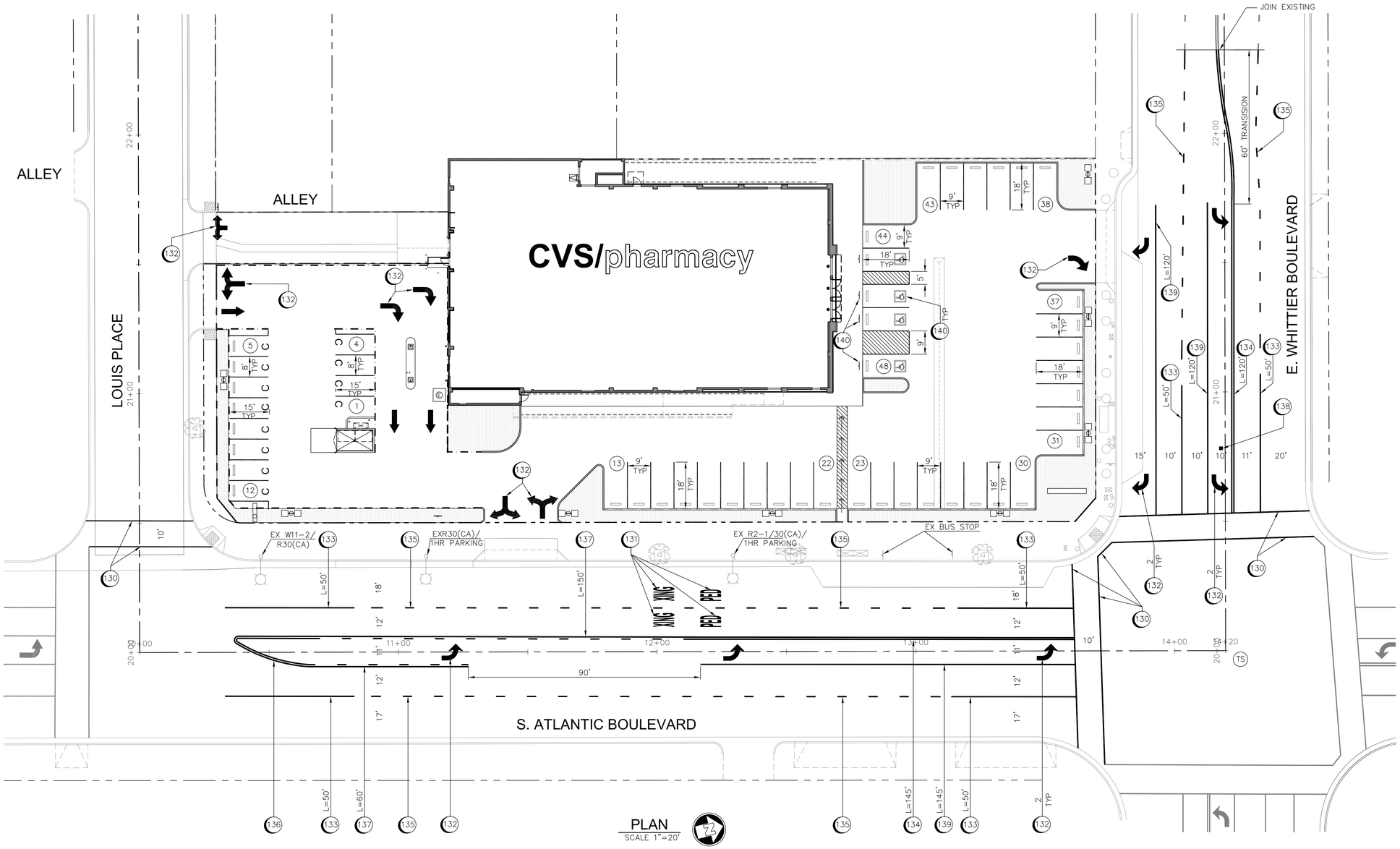

GENERAL STRIPING AND MARKING NOTES:

1. ALL TRAFFIC LINES AND PAVEMENT MARKINGS SHALL CONFORM TO CALTRANS STANDARD PLANS AND SPECIFICATIONS (LATEST EDITION).
2. REMOVAL OF ALL CONFLICTING LINES AND MARKINGS SHALL BE BY WET SANDBLASTING AND INCLUDES REMOVAL OF RAISED PAVEMENT MARKINGS.
3. LANE WIDTHS SHALL BE MEASURED BETWEEN CENTERLINES OF EACH ADJACENT SINGLE OR DOUBLE STRIPE OR TOP OF CURB, FLOW LINE OR EDGE OF PAVEMENT AS APPROPRIATE.

TRAFFIC STRIPING AND MARKING NOTES:

130 PAINT 12" WIDE WHITE CROSSWALK AND OR LIMIT LINE PER CALTRANS STD PLAN A24E.
131 PAINT WHITE PAVEMENT MARKING WORDS AS SHOWN PER CALTRANS STD PLAN A24D.
132 PAINT WHITE PAVEMENT MARKING ARROWS AS SHOWN PER CALTRANS STD. PLAN A24A.
133 PAINT 4" SOLID WHITE LANE LINE PER CALTRANS STD PLAN A20A.
134 PAINT DOUBLE YELLOW STRIPE PER CALTRANS STD PLAN A20A, DETAIL 22.
135 PAINT 4" WHITE SKIP LANE LINES PER CALTRANS STD PLAN A20A, DETAIL 9.
136 PAINT DOUBLE YELLOW MEDIAN ISLANDS PER CALTRANS STD PLAN A20B, DETAIL 29.
137 PAINT DOUBLE YELLOW TWO WAY LEFT TURN LANE PER CALTRANS STD PLAN A20B, DETAIL 31.
138 PLACE BLUE RAISED REFLECTIVE MARKERS FOR ALL FIRE HYDRANTS
139 PAINT 8" WHITE CHANNELIZING LINE PER CALTRANS STD PLAN A20D, DETAIL 38.
140 PAINT DISABLED PERSONS SPACES AE REQUIRED AND INSTALL SIGNAGE/LEGEND.

LEGENDS:

EXISTING RETAINING WALL TO REMAIN UNDER PAVING.
NEW RETAINING WALL WITH TOP OF WALL ABOVE ADJACENT PAVING.
NEW RETAINING WALL UNDER SIDEWALK/ PAVING TO PROTECT HISTORIC STRUCTURE.
TS SIGNALIZED INTERSECTION

1/27/11
Chattel Architecture Submittal

20 10 0 20 40
SCALE IN FEET
1 inch = 20 ft.

Know what's below. Call before you dig.

User = Shawnt Babakhanian
Date = Thursday, January 27, 2011 1:28:50 PM
Filename = M:\Charles Company\0686_02 AT\Golden Gate Theater - PS&E\Sheets\Final Design\C18-STR-CV01-606602.dwg

CIVIL ENGINEER OF RECORD

CONSULTANT:

AAE INCORPORATED
Municipal Engineering, Programs & Services
1815 E. Heim Avenue, Suite 100
Orange, CA 92865
Tel: (714) 940-0100 Fax: (714) 940-0700
www.aaeinc.com

REGISTERED PROFESSIONAL ENGINEER KENNETH R. PUTNAM No. 11733 Exp. 12/31/12 CIVIL STATE OF CALIFORNIA

CVS pharmacy

STORE NUMBER: 49557
WHITTIER BLVD. AND ATLANTIC BLVD.
LOS ANGELES, CALIFORNIA 90022

DEVELOPER:
CHARLES COMPANY
9034 WEST SUNSET BLVD.
WEST HOLLYWOOD, CA 90069
TEL (310)247-0900
FAX (310) 347-1525

REVISIONS:

DRAWING BY:
DATE:
JOB NUMBER:
TITLE: SITE AND STREET STRIPING PLAN
SHEET NUMBER: C-18
COMMENTS: NOT RELEASED FOR CONSTRUCTION

CONDUCTOR SCHEDULE

AWG	POLE	RUNS 1	2	3	4	5	6	7	8
12c CABLE	1					1/1	1/1	1/1	
	2					1/1	1/1	1/1	1/1
	3	1/1	1/1	1/1	1/1	1/1			
	4		1/1	1/1	1/1	1/1			
	5			1/1	1/1	1/1			
	6				1/1	1/1			
	7					1/1			
	8					1/1	1/1		
3c CABLE									
	TOTAL	1/1	2/2	3/3	4/4	8/8	3/3	2/2	1/1
#10	LUMINAIRES	2	2	2	2		2	2	2
DLC	ø2				2	2			
	ø3		1	1	1	1			
	ø4					4	4		
	ø6					2	2	2	2
	ø8		4	4	4	4	4		
VIDEO	POWER	1	1	1	1	2			
VIDEO	CAMERA	1	1	1	1	2			
CONDUIT SIZE		2"	3"	3"	3"	2-3"	3"	3"	2"

ALL CONDUIT, CONDUCTORS AND CABLES ARE EXISTING UNLESS MARKED (N)=NEW

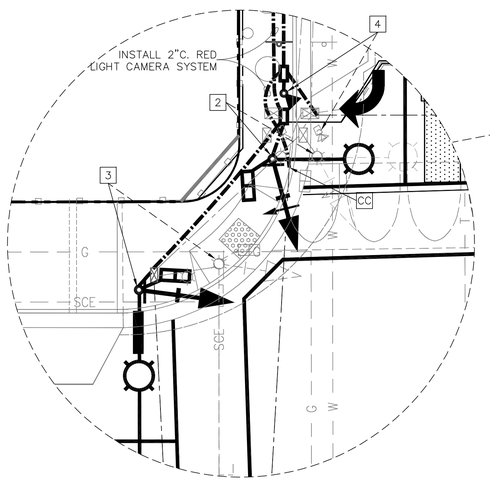

DETAIL "A"

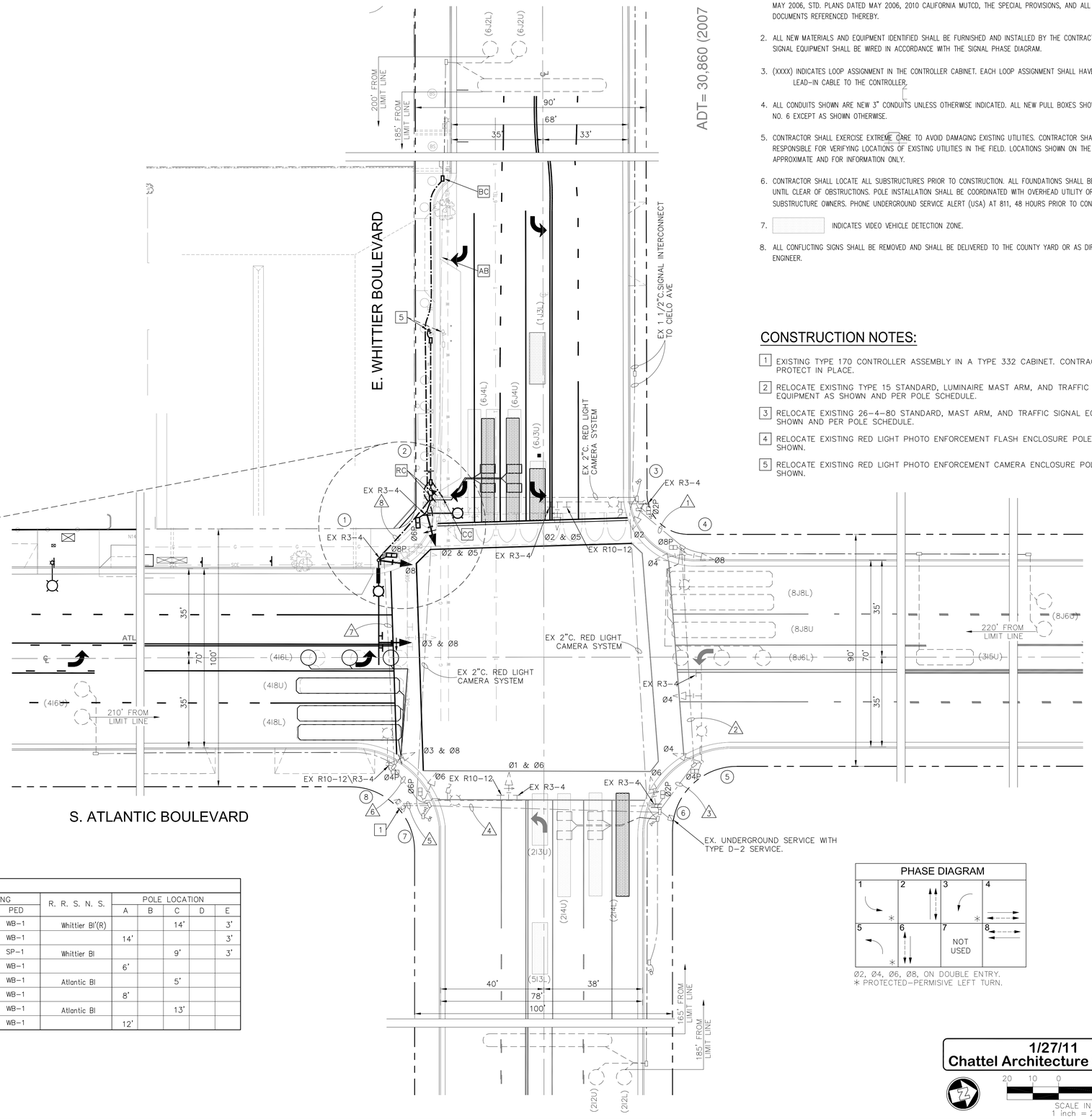

TRAFFIC SIGNAL GENERAL NOTES:

1. TRAFFIC SIGNAL AND HIGHWAY LIGHTING CONSTRUCTION SHALL CONFORM TO CALTRANS STD. SPECIFICATIONS DATED MAY 2006, STD. PLANS DATED MAY 2006, 2010 CALIFORNIA MUTCD, THE SPECIAL PROVISIONS, AND ALL REVISIONS AND DOCUMENTS REFERENCED THEREBY.
2. ALL NEW MATERIALS AND EQUIPMENT IDENTIFIED SHALL BE FURNISHED AND INSTALLED BY THE CONTRACTOR. ALL SIGNAL EQUIPMENT SHALL BE WIRED IN ACCORDANCE WITH THE SIGNAL PHASE DIAGRAM.
3. (XXXX) INDICATES LOOP ASSIGNMENT IN THE CONTROLLER CABINET. EACH LOOP ASSIGNMENT SHALL HAVE A SEPARATE LEAD-IN CABLE TO THE CONTROLLER.
4. ALL CONDUITS SHOWN ARE NEW 3" CONDUITS UNLESS OTHERWISE INDICATED. ALL NEW PULL BOXES SHOWN SHALL BE NO. 6 EXCEPT AS SHOWN OTHERWISE.
5. CONTRACTOR SHALL EXERCISE EXTREME CARE TO AVOID DAMAGING EXISTING UTILITIES. CONTRACTOR SHALL BE RESPONSIBLE FOR VERIFYING LOCATIONS OF EXISTING UTILITIES IN THE FIELD. LOCATIONS SHOWN ON THE PLAN ARE APPROXIMATE AND FOR INFORMATION ONLY.
6. CONTRACTOR SHALL LOCATE ALL SUBSTRUCTURES PRIOR TO CONSTRUCTION. ALL FOUNDATIONS SHALL BE HAND DUG UNTIL CLEAR OF OBSTRUCTIONS. POLE INSTALLATION SHALL BE COORDINATED WITH OVERHEAD UTILITY OR SUBSTRUCTURE OWNERS. PHONE UNDERGROUND SERVICE ALERT (USA) AT 811, 48 HOURS PRIOR TO CONSTRUCTION.
7. INDICATES VIDEO VEHICLE DETECTION ZONE.
8. ALL CONFLICTING SIGNS SHALL BE REMOVED AND SHALL BE DELIVERED TO THE COUNTY YARD OR AS DIRECTED BY THE ENGINEER.

CONSTRUCTION NOTES:

1. EXISTING TYPE 170 CONTROLLER ASSEMBLY IN A TYPE 332 CABINET. CONTRACTOR TO PROTECT IN PLACE.
2. RELOCATE EXISTING TYPE 15 STANDARD, LUMINAIRE MAST ARM, AND TRAFFIC SIGNAL EQUIPMENT AS SHOWN AND PER POLE SCHEDULE.
3. RELOCATE EXISTING 26-4-80 STANDARD, MAST ARM, AND TRAFFIC SIGNAL EQUIPMENT AS SHOWN AND PER POLE SCHEDULE.
4. RELOCATE EXISTING RED LIGHT PHOTO ENFORCEMENT FLASH ENCLOSURE POLE ASSEMBLY AS SHOWN.
5. RELOCATE EXISTING RED LIGHT PHOTO ENFORCEMENT CAMERA ENCLOSURE POLE ASSEMBLY AS SHOWN.

POLE SCHEDULE

No.	STANDARD TYPE	HGT.	SIG.M.A.	LUM.M.A.	LUMINAIRE HPS	PUSH BUTTON PHASE	PUSH BUTTON QUAD.	SIGNAL MOUNTING VEHICLE		PED	R. R. S. N. S.	POLE LOCATION A	B	C	D	E
1	26-4-80(R)	30'	40'(R)	12'(R)	200 W	Ø6	N	MAS-5A	VB-1	WB-1	Whittier Bl'(R)			14'		3'
2	15'(R)	30'	–	12''(R)	200 W	Ø8	E	–	SV-1-T	WB-1		14'				3'
3	26-4-129	30'	40'	12'	200 W	Ø8	E	MAS-5A	SV-1-T	SP-1	Whittier Bl			9'		3'
4	15	30'	–	12'	200 W	Ø2	S	–	VB-2	WB-1		6'				
5	26-4-80	30'	40'	12'	200 W	Ø2	E	MAS	VB-1	WB-1	Atlantic Bl			5'		
6	15	30'	–	12'	200 W	Ø4	W	–	SV-1-T	WB-1		8'				
7	26-4-80	30'	40'	12'	200 W	Ø4	W	MAS-5A	VB-1	WB-1	Atlantic Bl			13'		
8	15	30'	–	12'	200 W	Ø6	N	–	VB-2	WB-1		12'				

ALL EQUIPMENT IS EXISTING UNLESS MARKED (R)=RELOCATE
R.R. INDICATES RETROFLECTIVE.

PHASE DIAGRAM

Ø2, Ø4, Ø6, Ø8, ON DOUBLE ENTRY.
* PROTECTED-PERMISIVE LEFT TURN.

1/27/11
Chattel Architecture Submittal

SCALE IN FEET
1 inch = 20 ft.

811 Know what's below. Call before you dig.

User = Shawnt Babokhanian
Date = Thursday, January 27, 2011 1:39:42 PM
Filename = M:\Charles Company\066_02 AOT\Golden Gate Theater - PG&E\Sheets\Final Design\C19-SIG-CV01-606602.dwg

CIVIL ENGINEER OF RECORD

CONSULTANT:

AAE INCORPORATED
Municipal Engineering, Programs & Services
1815 E. Heim Avenue, Suite 100
Orange, CA 92865
Tel: (714) 940-0100 Fax: (714) 940-0700
www.aaeinc.com

SEAL:

CVS pharmacy

STORE NUMBER: 49557
WHITTIER BLVD. AND ATLANTIC BLVD.
LOS ANGELES, CALIFORNIA 90022

OWNER/DEVELOPER:
CHARLES COMPANY
9034 WEST SUNSET BLVD.
WEST HOLLYWOOD, CA 90069
TEL (310)247-0900
FAX (310) 347-1525

REVISIONS:

DRAWING BY:
DATE:
JOB NUMBER:
TITLE: TRAFFIC SIGNAL MODIFICATION PLAN
SHEET NUMBER: C-19

COMMENTS:
NOT RELEASED FOR CONSTRUCTION

GENERAL NOTES:

1. ALL NOTES STATED HEREIN APPLY TO THE PROJECT AND ALL THE SHEETS THEREOF.
2. ALL WORK, LABOR AND MATERIALS SHALL BE IN CONFORMITY WITH THE STANDARD SPECIFICATIONS AND WITH THE STANDARD PLANS FOR PUBLIC WORKS CONSTRUCTION (LATEST EDITION) AND THEIR SUPPLEMENTS, THESE PLANS, THE PROJECT SPECIFICATIONS, AND ALL SAFETY REGULATIONS CODES AND REQUIREMENTS PERTINENT TO THE PROJECT CONSTRUCTION INCLUDING NPDES REQUIREMENTS.
3. THE CONTRACTOR SHALL, WHEN WORKING IN THE PUBLIC RIGHT OF WAY MAINTAIN TRAFFIC IN CONFORMANCE WITH APPROVED TRAFFIC CONTROL PLANS. HE SHALL PROVIDE 24 HOUR SERVICE TO REMOVE, INSTALL, RELOCATE AND MAINTAIN WARNING DEVICES. THE CONTRACTOR SHALL PROVIDE A PHONE NUMBER WHERE THE CONTRACTOR'S SUPERVISOR IN CHARGE OF THIS PROJECT CAN BE REACHED 24 HOURS A DAY, SEVEN DAYS A WEEK.
4. LOCATIONS OF EXISTING SURFACE AND SUB SURFACE UTILITIES AND SUBSTRUCTURES SHOWN ON THE PLANS ARE BASED ON INFORMATION RECEIVED FROM VARIOUS UTILITY COMPANIES, LOCAL AGENCIES AND FIELD INVESTIGATION. SOME OF THE STREET RECONSTRUCTION WORK WILL BE IN CLOSE PROXIMITY OF THE EXISTING UNDERGROUND UTILITIES. THE CONTRACTOR IS ADVISED THAT LOCATIONS SHOWN ARE APPROXIMATE AND EXTREME CAUTION IS REQUIRED TO PROTECT THE EXISTING FACILITIES. APPROVAL OF THESE PLANS BY THE CITY DOES NOT CONSTITUTE A REPRESENTATION TO THE ACCURACY OF THE LOCATION, OR THE EXISTENCE OR NONEXISTENCE OF ANY UNDERGROUND UTILITY, PIPE OR STRUCTURE WITHIN THE LIMITS OF THIS PROJECT.
5. PRIOR TO ANY CONSTRUCTION, THE CONTRACTOR SHALL BE PREPARED TO POTHOLE AND LOCATE ALL EXISTING UTILITIES WHICH APPEAR TO BE IN CONFLICT WITH THIS PROJECT, AT NO ADDITIONAL COST TO THE CLIENT. THE CONTRACTOR SHALL NOTIFY THE PROJECT ENGINEER OF ANY CONFLICTS WITH PROPOSED IMPROVEMENTS. THE CONTRACTOR SHALL ALSO NOTIFY UNDERGROUND SERVICE ALERT (811) 48 HOURS PRIOR TO START OF CONSTRUCTION FOR WORK IN BOTH RIGHT OF WAY AND ON-SITE.
6. WHENEVER EXISTING SEWER LINES, WATER LINES, GAS MAINS, CULVERTS, OR OTHER PIPES OR STRUCTURES ARE ENCOUNTERED DURING CONSTRUCTION, THE CONTRACTOR SHALL USE PROPER CARE IN PRESERVING THE SAME INTACT AND WILL BE HELD RESPONSIBLE FOR ANY DAMAGE DONE TO THE EXISTING FACILITIES DURING THE PROGRESS OF THE WORK.
7. THE CONTRACTOR IS ADVISED TO USE EXTREME CAUTION AND PROTECT ALL EXISTING FACILITIES AND UTILITIES IN PLACE UNLESS OTHERWISE NOTED.
8. AT NO TIME IS ANY ADJACENT BUSINESS OR SCHOOL TO BE WITHOUT ACCESS TO THEIR PROPERTY UNLESS OTHERWISE APPROVED BY THE PROJECT ENGINEER. THE CONTRACTOR SHALL RAMP OR PLATE DRIVEWAYS AT THE END OF EACH DAY AS REQUIRED.
9. THE CONTRACTOR SHALL OBTAIN CONSTRUCTION PERMIT(S) FROM THE COUNTY OF LOS ANGELES PUBLIC WORKS DEPT. (L.A.C.D.P.W.)
10. THE CONTRACTOR SHALL NOTIFY THE COUNTY OF LOS ANGELES PUBLIC WORKS DEPARTMENT AT LEAST 48 HOURS PRIOR TO STARTING WORK ON THE PROJECT. ALL WORK IN PUBLIC RIGHT OF WAY AND FOR SUCH WORK AS GRADING ON SITE SHALL BE SUBJECT TO COUNTY INSPECTION.
11. ALL MANHOLES, VALVE BOXES AND SIMILAR APPURTENANT STRUCTURES SHALL BE LEFT BELOW SUBGRADE DURING PAVING AND THE CONTRACTOR SHALL RAISE SAID STRUCTURES TO FINISHED GRADE AFTER PAVING AND MAKE NECESSARY REPAIRS TO PAVEMENT.
12. ALL EXISTING STREET INTERSECTIONS ARE TO BE OPEN FOR TRAFFIC AT THE END OF EACH WORKING DAY.
13. CONTRACTOR SHALL MAINTAIN DUST CONTROL AND DIRT TRACKING PREVENTION AT ALL TIMES BY SWEEPING PAVED AREAS. DUST FROM EXPOSED UNPAVED AREAS SHALL BE CONTROLLED BY WATERING USING RECLAIMED WATER, IF AVAILABLE. NO WATER USED FOR CONSTRUCTION SHALL ENTER THE STORM DRAIN SYSTEM.
14. CONSTRUCTION SURVEY & STAKING SHALL BE THE RESPONSIBILITY OF THE CONTRACTOR.
15. ALL NECESSARY MATERIALS & COMPACTION TESTING RELATED TO WORK IS TO BE ARRANGED BY THE CONTRACTOR FOR USING A TESTING LABORATORY APPROVED BY THE LOS ANGELES COUNTY DEPARTMENT OF PUBLIC WORKS.
16. THE CONTRACTOR'S ATTENTION IS DIRECTED TO SECTION 7-10.4.1 OF THE STANDARD SPECIFICATIONS IN REGARD TO SAFETY ORDERS.
17. WORK IN PUBLIC STREETS, ONCE BEGUN, SHALL BE PERFORMED TO COMPLETION WITHOUT DELAY SO AS TO PROVIDE MINIMAL INCONVENIENCE TO THE PUBLIC.
18. THE CONTRACTOR SHALL NOTIFY ADJACENT PROPERTY OWNERS OR OCCUPANTS OF THE PROPOSED IMPROVEMENTS EFFECTING THEIR PROPERTY PER SECTION 7-9 OF THE STANDARD SPECIFICATIONS.
19. PRIOR TO START OF ANY WORK, THE CONTRACTOR SHALL PREPARE AND SUBMIT FOR APPROVAL BY THE PROJECT ENGINEER A COMPREHENSIVE CONSTRUCTION PHASING PLAN THAT MITIGATES THE ACCESS TO ANY DRIVEWAY AND OR IMPACT ON THE PROJECT AND ADJACENT PROPERTIES.
20. NO STORAGE OF MATERIALS OR EQUIPMENT SHALL BE ALLOWED OVERNIGHT WITHIN PUBLIC RIGHT-OF-WAY.
21. TRAFFIC CONTROL SHALL BE PROVIDED AT ALL TIMES IN ACCORDANCE WITH THE 2006 MUTCD CALIFORNIA SUPPLEMENT AND TRAFFIC CONTROL PLAN TO BE PREPARED BY CONTRACTOR AND APPROVED BY THE PROJECT ENGINEER.
22. THE WORK SHOWN ON THESE DRAWINGS REQUIRES THE PRIME CONTRACTOR TO HAVE A VALID CLASS "A" LICENSE ISSUED BY THE STATE OF CALIFORNIA.
23. THE CONTRACTOR SHALL FAMILIARIZE HIMSELF/HERSELF WITH THE SITE AND SHALL BE SOLELY RESPONSIBLE FOR ANY DAMAGE TO EXISTING FACILITIES RESULTING DIRECTLY OR INDIRECTLY FROM HIS/HER OPERATIONS, WHETHER OR NOT SUCH FACILITIES ARE SHOWN ON THESE PLANS.
24. THE CONTRACTOR SHALL NOTIFY THE FOLLOWING AGENCIES 1 FULL WORKING DAY PRIOR TO STARTING ANY WORK:

PROJECT ENGINEER.	(714) 940-0110
COUNTY SHERIFF	(XXX) XXX-XXXX
FIRE DEPARTMENT	(XXX) XXX-XXXX
PUBLIC TRANSIT (MONTEBELLO)	(XXX) XXX-XXXX
PUBLIC TRANSIT (MTA)	(213) 922-6000

25. AS BUILTS OF THE COMPLETED PROJECT SHALL BE SUBMITTED FOR APPROVAL OF THE PROJECT ENGINEER.
26. THE CONTRACTOR SHALL BE RESPONSIBLE FOR VERIFYING IN THE FIELD ALL DIMENSIONS AS SHOWN ON THE PLAN AND NOTIFY THE PROJECT ENGINEER OF ANY DISCREPANCIES.
27. ALL NEW WALLS WHERE SHOWN ARE TO HAVE DRAINAGE IMPROVEMENTS INCLUDING WEEP HOLES, BEHIND WALL SUBDRAINS AND BACK OF WALLS DRAINAGE SWALES AS SHOWN ON TYPICAL WALL PLAN. SUB-DRAINS ARE TO OUTLET DRAIN AS SHOWN.
28. CONTRACTOR TO PROVIDE SWPPP PLAN TO LOS ANGELES COUNTY DEPARTMENT OF PUBLIC WORKS FOR REVIEW AND APPROVAL. PLAN IS TO BE FOR MITIGATION OF DRAINAGE FROM SITE ONTO PUBLIC RIGHT-OF-WAY, ADJACENT PRIVATE PROPERTY. USE OF SAND AND GRAVEL BAGS, SILT FENCES AND STRAW ROPE FILTERS AND OTHER MATERIALS ARE A MINIMUM. CONTRACTOR IS TO INSTALL SECURITY FENCE INITIALLY OUTSIDE OF ALL AREAS SUBJECT TO GRADING. FENCING AND BMP FEATURES ARE TO BE ADJUSTED TO ALIGNMENT OF WORK. FENCE IS TO REMAIN AFTER COMPLETION OF GRADING TO PROTECT AREA AND TO ENCLOSE FUTURE BUILDING/PARKING LOT AREAS.

811 Know what's below. Call before you dig.

STORM WATER POLLUTION REQUIREMENT:

STORM WATER POLLUTION CONTROL REQUIREMENTS FOR STREET CONSTRUCTION.

A. BEST MANAGEMENT PRACTICES FOR CONSTRUCTION ACTIVITIES

THE FOLLOWING IS INTENDED AS AN ATTACHMENT FOR CONSTRUCTION AND REPRESENTS THE MINIMUM STANDARDS OF GOOD HOUSEKEEPING WHICH MUST BE IMPLEMENTED ON ALL CONSTRUCTION SITES, REGARDLESS OF SIZE.

1. ERODED SEDIMENTS AND OTHER POLLUTANTS MUST BE RETAINED ON-SITE AND MAY NOT BE TRANSPORTED FROM THE SITE VIA SHEETFLOW, SWALES, AREA DRAINS, NATURAL DRAINAGE COURSES OR WIND.
2. STOCKPILES OR EARTH AND OTHER CONSTRUCTION RELATED MATERIALS MUST BE PROTECTED FROM BEING TRANSPORTED FROM THE SITE BY THE FORCES OF WIND, WATER OR VEHICLES.
3. FUELS, OILS, SOLVENTS, AND OTHER TOXIC MATERIALS MUST BE STORED IN ACCORDANCE WITH THEIR LISTING AND ARE NOT TO CONTAMINATE THE SOIL AND SURFACE WATERS. ALL APPROVED STORAGE CONTAINERS ARE TO BE PROTECTED FROM THE WEATHER. SPILLS MAY NOT BE WASHED INTO THE DRAINAGE SYSTEM.
4. EXCESS OR WASTE CONCRETE MAY NOT BE WASHED INTO THE PUBLIC WAY OR ANY OTHER DRAINAGE SYSTEM. PROVISIONS SHALL BE MADE TO RETAIN CONCRETE WASTES UNTIL THEY CAN BE DISPOSED OF AS SOLID WASTE.
5. TRASH AND CONSTRUCTION RELATED SOLID WASTES MUST BE DEPOSITED INTO A COVERED RECEPTACLE TO PREVENT CONTAMINATION OF RAINWATER AND DISPERSAL BY WIND.
6. SEDIMENTS AND OTHER MATERIALS MAY NOT BE TRACKED FROM THE SITE BY VEHICLE TRAFFIC. THE CONSTRUCTION ENTRANCE ROADWAYS MUST BE STABILIZED SO AS TO INHIBIT SEDIMENTS FROM BEING DEPOSITED INTO THE PUBLIC WAY. ACCIDENTAL DEPOSITIONS MUST BE SWEPT UP IMMEDIATELY AND MAY NOT BE WASHED DOWN BY RAIN OR OTHER MEANS.
7. ANY SLOPES WITH DISTURBED SOILS OR DENUDED OF VEGETATION MUST BE STABILIZED SO AS TO INHIBIT EROSION BY WIND AND WATER.
8. THE CONTRACTOR SHALL INSTALL ADDITIONAL EROSION CONTROL MEASURES AS MAY BE REQUIRED BY THE PROJECT ENGINEER DUE TO UNCOMPLETED GRADING OPERATIONS OR UNFORESEEN CIRCUMSTANCES WHICH MAY ARISE.
9. THE CONTRACTOR SHALL BE RESPONSIBLE AND SHALL TAKE NECESSARY PRECAUTIONS TO PREVENT PUBLIC TRESPASS ONTO AREAS WHERE IMPOUNDED WATERS CREATE A HAZARDOUS CONDITION.
10. ACCESS TO THE SITE TO BE APPROVED BY THE PROJECT ENGINEER.

B. THE FOLLOWING BMPS AS OUTLINED IN, BUT NOT LIMITED TO, THE BEST MANAGEMENT PRACTICES HANDBOOK, CALIFORNIA STORM WATER QUALITY TASK FORCE, SACRAMENTO, CALIFORNIA LATEST EDITION, MAY APPLY DURING THE CONSTRUCTION OF THIS PROJECT (ADDITIONAL MEASURES MAY BE REQUIRED IF DEEMED APPROPRIATE BY CITY INSPECTORS).

CA40	EMPLOYEE TRAINING
EC-1	SCHEDULING
EC-2	PRESERVATION OF EXISTING VEGETATION
NS-1	WATER CONSERVATION PRACTICES
NS-3	PAVING OPERATIONS
NS-7	POTABLE WATER/IRRIGATION
NS-8	VEHICLE AND EQUIPMENT CLEANING
NS-9	VEHICLE AND EQUIPMENT FUELING
NS-10	VEHICLE AND EQUIPMENT MAINTENANCE
NS-12	CONCRETE CURING
NS-13	CONCRETE FINISHING
SE-7	STREET SWEEPING AND VACUUMING
SE-8	SAND BAG BARRIER
SE-10	STORM DRAIN INLET PROTECTION
TC-1	STABILIZED CONSTRUCTION ENTRANCE/EXIT
TC-3	ENTRANCE/OUTLET TIREWASH
WE-1	WIND EROSION CONTROL
WM-1	MATERIAL DELIVERY AND STORAGE
WM-2	MATERIAL USE
WM-3	STOCKPILE MANAGEMENT
WM-4	SPILL PREVENTION AND CONTROL
WM-5	SOLID WASTE MANAGEMENT
WM-6	HAZARDOUS WASTE MANAGEMENT
WM-7	CONTAMINATED SOIL MANAGEMENT
WM-8	CONCRETE WASTE MANAGEMENT
WM-9	SANITARY/SEPTIC WASTE MANAGEMENT

ABBREVIATIONS:

AC	–	ASPHALT CONCRETE
BCR	–	BEGINNING OF CURB RETURN
BW	–	BACK OF WALK
CMB	–	CRUSHED MISCELLANEOUS BASE
CL	–	CENTER LINE
CONC	–	CONCRETE
C&G	–	CURB AND GUTTER
ECR	–	END OF CURB RETURN
EG	–	EXISTING OF GUTTER
EL	–	ELEVATION
FL	–	FLOW LINE
FS	–	FINISHED SURFACE
GB	–	GRADE BREAK
LA	–	LANDSCAPE AREA
PCC	–	PORTLAND CEMENT CONCRETE
PL	–	PROPERTY LINE
R/W	–	RIGHT-OF-WAY
STA	–	STATION
STR GR	–	STRAIGHT GRADE
TC	–	TOP OF CURB
VAR	–	VARIES
RFL	–	ROUGH FINISH LEVEL
TOW	–	TOP OF WALL

NOTICE TO CONTRACTOR RE: SAFETY

ALL CONTRACTORS AND SUBCONTRACTORS PERFORMING WORK SHOWN IN OR RELATED TO THESE PLANS SHALL CONDUCT THEIR OPERATIONS SO THAT EMPLOYEES ARE PROVIDED A SAFE PLACE TO WORK AND THE PUBLIC IS PROTECTED. ALL CONTRACTORS AND SUBCONTRACTORS SHALL COMPLY WITH THE "OCCUPATIONAL SAFETY AND HEALTH REGULATIONS THE U.S. DEPARTMENT OF LABOR, AND WITH THE STATE OF CALIFORNIA DEPARTMENT OF INDUSTRIAL RELATIONS "CONSTRUCTION SAFETY ORDERS". THE CIVIL ENGINEER SHALL NOT BE RESPONSIBLE IN ANY WAY FOR THE CONTRACTOR OR SUBCONTRACTOR'S COMPLIANCE WITH SAID REGULATIONS AND ORDERS. CONTRACTOR FURTHER AGREES THAT HE SHALL ASSUME SOLE COMPLETE RESPONSIBILITY FOR THE JOB SITE CONDITIONS DURING THE COURSE OF CONSTRUCTION OF THIS PROJECT, INCLUDING SAFETY OF ALL PERSONS AND PROPERTY. THIS REQUIREMENT SHALL APPLY CONTINUOUSLY AND NOT BE LIMITED TO THE NORMAL WORKING HOURS, AND THAT THE CONTRACTOR SHALL DEFEND, INDEMNIFY AND HOLD THE OWNER, AND THE PROJECT ENGINEER HARMLESS FROM ANY AND ALL LIABILITY, REAL OR ALLEGED, IN CONNECTION WITH THE PERFORMANCE OF WORK ON THIS PROJECT, EXCEPTING LIABILITY ARISING FROM SOLE NEGLIGENCE OF THE OWNER OR PROJECT ENGINEER.

NOTES:

1. PORTIONS OF THIS PROJECT REQUIRE SPECIAL INSPECTION.
2. A DEPUTY INSPECTOR SHALL BE PRESENT DURING PLACEMENT OF ALL CONCRETE WHERE fc' IS OVER 2500 PSI. ALL RETAINING WALLS OF REINFORCED CONCRETE TO REQUIRE CONCRETE OF fc'=3500 PSI.
3. ALL OF THE REQUIREMENTS FOR INSPECTION OF FOUNDATION WORK IS TO COMPLY WITH THE REQUIREMENTS OF THE

LEGENDS:

	EX. PROPERTY LINE
	NEW PROPERTY LINE
	NEW RETAINING WALL
	NEW LIGHTING
	NEW LANSCAPE AREA
	FIRE HYDRANT
WV	WATER VALVE
GV	GAS VALVE
WM	WATER METER
GM	GAS METER
E	ELECTRIC BOX
ED	ELECTRIC BOX(SCE)
TS	TRAFFIC SIGNAL BOX
	TELEPHONE
TV	TELEPHONE VAULT
	TRASH RECEPTACLE
	STREET LIGHT POLE
	TRAFFIC SIGNAL LIGHT
	POWER POLE
	GUY ANCHOR
SD	STORM DRAIN MANHOLE
E	ELECTRICAL MANHOLE
S	SEWER MANHOLE
	TRAFFIC CONTROL SIGN
(203.1)	EXISTING ELEVATION
203.1	PROPOSED ELEVATION
	BENCH
	GRATING
	NEWSPAPER STAND
	VENT
	TREES
S	SEWER LINE
W	WATER LINE
G	GAS LINE
T	TELEPHONE LINE
SD	STORM DRAIN PIPE
CTV	CABLE TV LINE
E	ELECTRICAL LINE
	FENCE/WALL
	RIGHT-OF-WAY
(GB)	GRADE BREAK
RL	RED LIGHT EQUIPMENT

SEE GREEN BOOK FOR STANDARD ABREVIATIONS

1/27/11
Chattel Architecture Submittal

CIVIL ENGINEER OF RECORD

CONSULTANT:

AAE INCORPORATED
Municipal Engineering, Programs & Services
1815 E. Heim Avenue, Suite 100
Orange, CA 92865
Tel: (714) 940-0100 Fax: (714) 940-0700
www.aaeinc.com

REGISTERED PROFESSIONAL ENGINEER KENNETH R. PUTNAM No. 11733 Exp. 12/31/12 CIVIL STATE OF CALIFORNIA

CVS pharmacy

STORE NUMBER: 49557
WHITTIER BLVD. AND ATLANTIC BLVD.
LOS ANGELES, CALIFORNIA 90022

DEVELOPER:

CHARLES COMPANY
9034 WEST SUNSET BLVD.
WEST HOLLYWOOD, CA 90069
TEL (310)247-0900
FAX (310) 347-1525

REVISIONS:

DRAWING BY:

DATE:

JOB NUMBER:

TITLE: GENERAL NOTES

SHEET NUMBER: C-2

COMMENTS: NOT RELEASED FOR CONSTRUCTION

User = Shawnt Babakhanian
Date = Thursday, January 27, 2011 11:52:49 AM
Filename = M:\Charles Company\686_02 AllGolden Gate Theater - PS&E\Sheets\Final Design\C02-GEN-CV01-606602.dwg

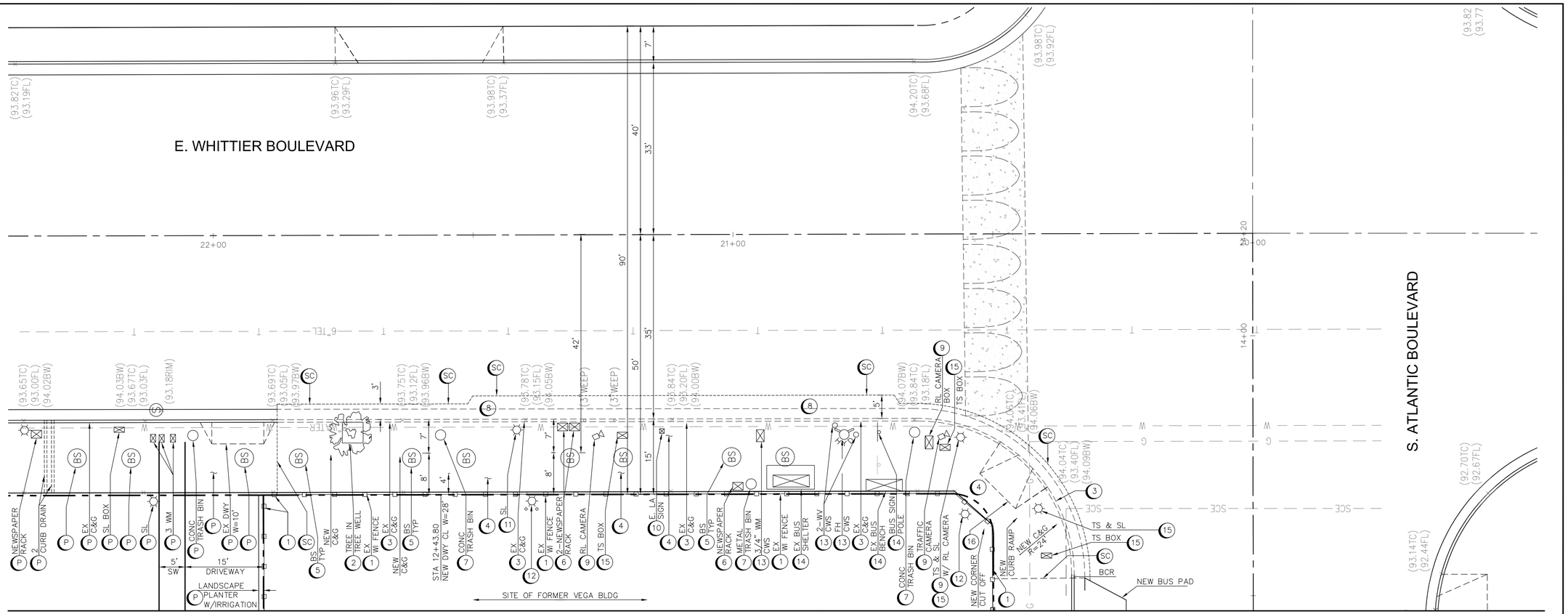

PLAN
SCALE 1"=10'

CONSTRUCTION NOTES:

(P) PROTECT IN PLACE.
(1) REMOVE WROUGHT IRON FENCE/ REMOVE CHAIN LINK FENCE.
(2) REMOVE TREE – STORE – REPLANT IN NEW PARKWAY.
(3) REMOVE CURB AND GUTTER.
(4) REMOVE SIDEWALK.
(5) REMOVE (BS)
(6) REMOVE NEWSPAPER RACK.
(7) REMOVE METAL TRASH CAN/ CONCRETE CAN – STORE – RESET IN NEW SIDEWALK.
(8) REMOVE STREET SECTION FOR RIGHT TURN LANE AND BUS PAD.
(SC) SAWCUT LINE FOR REMOVALS.
(9) RED LIGHT CAMERA EQUIPMENT – TO BE RELOCATED BY RED LIGHT.
(10) REMOVE EAST LOS ANGELES SIGN, STORE, RESET IN NEW SIDEWALK.
(11) SCE STREET LIGHT – REMOVE, STORE, RESET IN NEW SIDEWALK BY SCE.
(12) ONSITE LIGHT BASE WITH BARRICADES – REMOVE.
(13) WATER SYSTEM FACILITY OF CWS – TO BE RELOCATED/ABANDONED BY CWS.
(14) REMOVE BUS SHELTER AND BENCH, STORE, RECONDITION, RESET IN NEW SIDEWALK.
(15) TRAFFIC SIGNAL EQUIPMENT, SEE SHEET TS-1 AND TS-2.
(16) REMOVE CURB RAMP.
(17) EXISTING CONCRETE RAMP/ STEP/ WITH WALLS PROTECT IN PLACE.
(18) REMOVE DRIVEWAY/ CONCRETE.
(19) REMOVE WALLS/ CURB.
(20) SCE FACILITIES.
(21) REMOVE EXISTING METAL STAIRS TO 12' ABOVE NEW GRADE.
(22) REMOVE JIM'S BURGER BUILDING.
(23) STRIP POLE OF SIGNS – POLE TO REMAIN.
(24) GAS COMPANY FACILITIES.
(25) REMOVE ALLEY ENTRANCE, GUTTER AND AC PAVEMENT.
(26) REMOVE TREE.

1/27/11
Chattel Architecture Submittal

10 5 0 10 20
SCALE IN FEET
1 inch = 10 ft.

User = Shawnt Babakhanian
Date = Thursday, January 27, 2011 11:53:55 AM
Filename = M:\Charles Company\0686_02 AllGolden Gate Theater - PS&E\Sheets\Final Design\C03-DEM-CV01-606602.dwg

Know what's below. Call before you dig.

CIVIL ENGINEER OF RECORD

CONSULTANT:

AAE INCORPORATED
Municipal Engineering, Programs & Services
1815 E. Heim Avenue, Suite 100
Orange, CA 92865
Tel: (714) 940-0100 Fax: (714) 940-0700
www.aaeinc.com

REGISTERED PROFESSIONAL ENGINEER KENNETH R. PUTNAM No. 11733 Exp. 12/31/12 CIVIL STATE OF CALIFORNIA

CVS pharmacy

STORE NUMBER: 49557
WHITTIER BLVD. AND ATLANTIC BLVD.
LOS ANGELES, CALIFORNIA 90022

DEVELOPER:
CHARLES COMPANY
9034 WEST SUNSET BLVD.
WEST HOLLYWOOD, CA 90069
TEL (310)247-0900
FAX (310) 347-1525

REVISIONS:

DRAWING BY:
DATE:
JOB NUMBER:
TITLE: WHITTIER BLVD. DEMOLITION PLAN
SHEET NUMBER: C-3
COMMENTS: NOT RELEASED FOR CONSTRUCTION

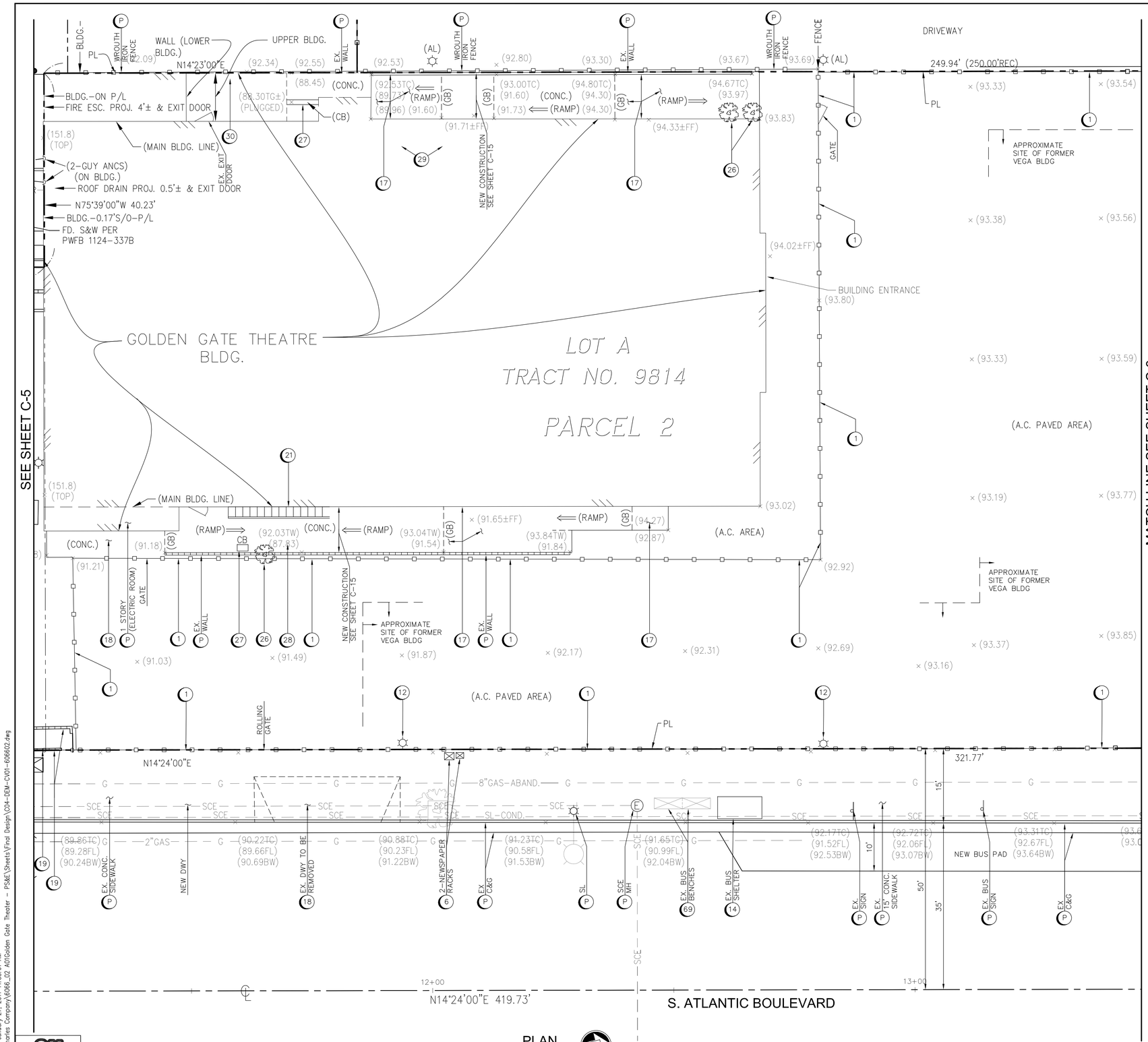

PLAN
SCALE 1"=10'

CONSTRUCTION NOTES:

- (P) PROTECT IN PLACE.
- (1) REMOVE WROUGHT IRON FENCE/ REMOVE CHAIN LINK FENCE.
- (2) REMOVE TREE – STORE – REPLANT IN NEW PARKWAY.
- (3) REMOVE CURB AND GUTTER.
- (4) REMOVE SIDEWALK.
- (5) REMOVE (BS)
- (6) REMOVE NEWSPAPER RACK.
- (7) REMOVE METAL TRASH CAN/ CONCRETE CAN – STORE – RESET IN NEW SIDEWALK.
- (8) REMOVE STREET SECTION FOR RIGHT TURN LANE AND BUS PAD.
- (SC) SAWCUT LINE FOR REMOVALS.
- (9) RED LIGHT CAMERA EQUIPMENT – TO BE RELOCATED BY RED LIGHT.
- (10) REMOVE EAST LOS ANGELES SIGN, STORE, RESET IN NEW SIDEWALK.
- (11) SCE STREET LIGHT – REMOVE, STORE, RESET IN NEW SIDEWALK.
- (12) ONSITE LIGHT BASE WITH BARRICADES – REMOVE.
- (13) WATER SYSTEM FACILITY OF CWS – TO BE RELOCATED/ABANDONED BY CWS.
- (14) REMOVE BUS SHELTER AND BENCH, STORE, RECONDITION, RESET IN NEW SIDEWALK.
- (15) TRAFFIC SIGNAL EQUIPMENT, SEE SHEET TS-1 AND TS-2.
- (16) REMOVE CURB RAMP.
- (17) EXISTING CONCRETE RAMP/ STEP/ WITH WALLS PROTECT IN PLACE.
- (18) REMOVE DRIVEWAY/ CONCRETE.
- (19) REMOVE WALLS/ CURB.
- (20) SCE FACILITIES.
- (21) REMOVE EXISTING METAL STAIRS TO 12' ABOVE NEW GRADE.
- (22) REMOVE JIM'S BURGER BUILDING.
- (23) STRIP POLE OF SIGNS – POLE TO REMAIN.
- (24) GAS COMPANY FACILITIES.
- (25) REMOVE ALLEY ENTRANCE, GUTTER AND AC PAVEMENT.
- (26) REMOVE TREE.
- (27) CLOSE OFF DRAIN – TEMPORARILY.
- (28) REMOVE FIRE ESCAPE STAIRWAY UP TO 10' HEIGHT ABOVE TOP OF EXISTING WALL AND STOCKPILE FOR STORAGE.
- (29) CLEAN WALKWAY OF TRASH AND DISPOSE OF.
- (30) RESTORE WROUGHT IRON FENCE IN LOWER DOORWAY AREA.

1/27/11
Chattel Architecture Submittal

SCALE IN FEET
1 inch = 10 ft.

Know what's below. Call before you dig.

User = Shawnt Babakhanian
Date = Thursday, January 27, 2011 11:55:01 AM
Filename = M:\Charles Company\6086_02 AOT\Golden Gate Theater - PS&E\Sheets\Final Design\C04-DEM-C\01-606602.dwg

CIVIL ENGINEER OF RECORD

CONSULTANT:

AAE INCORPORATED
Municipal Engineering, Programs & Services
1815 E. Heim Avenue, Suite 100
Orange, CA 92865
Tel: (714) 940-0100 Fax: (714) 940-0700
www.aaeinc.com

REGISTERED PROFESSIONAL ENGINEER
KENNETH R. PUTNAM
No. 11733
Exp. 12/31/12
CIVIL
STATE OF CALIFORNIA

CVS pharmacy

STORE NUMBER: 49557
WHITTIER BLVD. AND ATLANTIC BLVD.
LOS ANGELES, CALIFORNIA 90022

DEVELOPER:
CHARLES COMPANY
9034 WEST SUNSET BLVD.
WEST HOLLYWOOD, CA 90069
TEL (310)247-0900
FAX (310) 347-1525

REVISIONS:

DRAWING BY:
DATE:
JOB NUMBER:
TITLE:
SITE AND ATLANTIC BLVD.
DEMOLITION PLAN
SHEET NUMBER:
C-4

COMMENTS:
NOT RELEASED FOR CONSTRUCTION

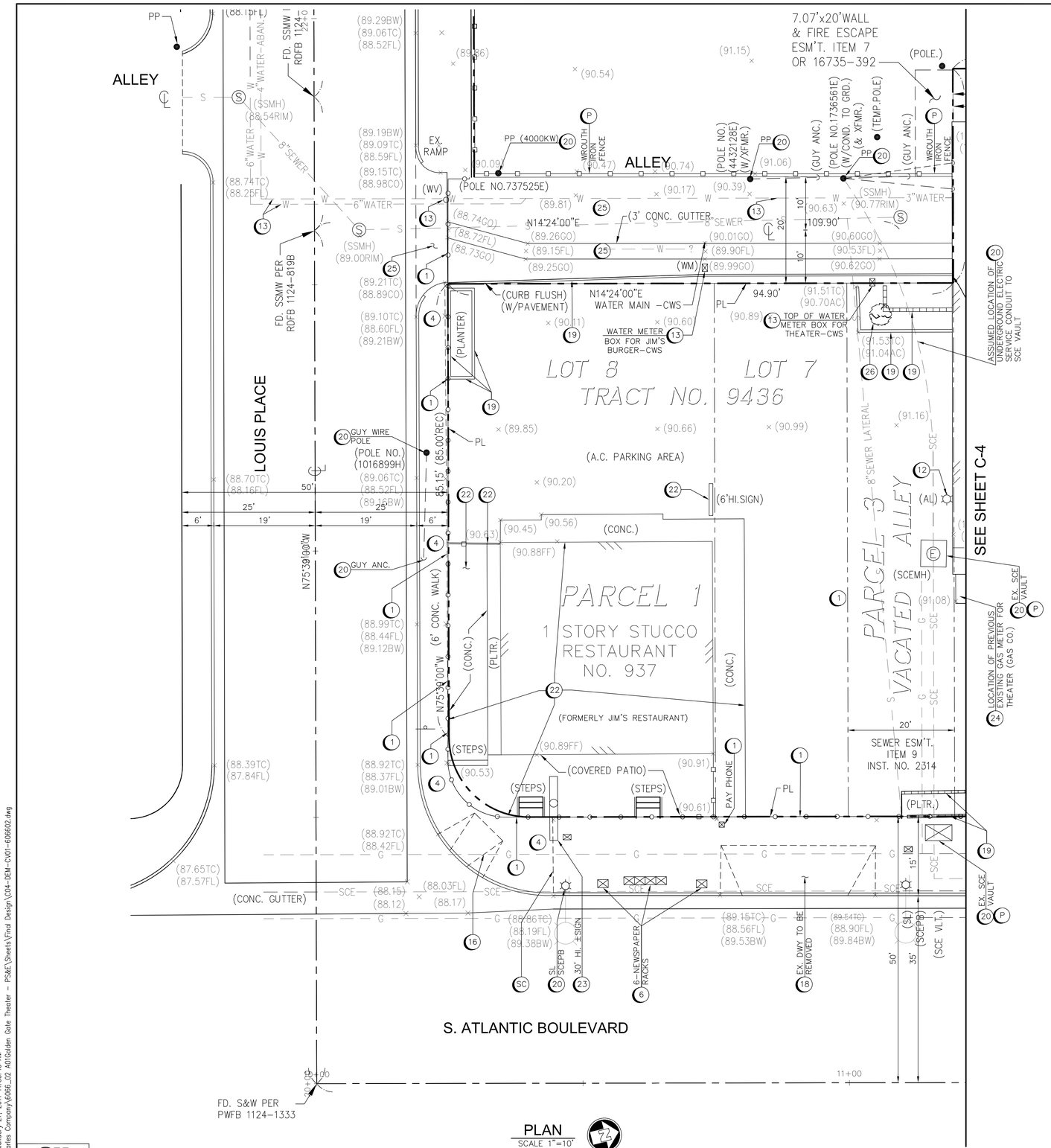

PLAN
SCALE 1"=10'

CONSTRUCTION NOTES:

- (P) PROTECT IN PLACE.
- (1) REMOVE WROUGHT IRON FENCE/ REMOVE CHAIN LINK FENCE.
- (2) REMOVE TREE – STORE – REPLANT IN NEW PARKWAY.
- (3) REMOVE CURB AND GUTTER.
- (4) REMOVE SIDEWALK.
- (5) REMOVE (BS)
- (6) REMOVE NEWSPAPER RACK.
- (7) REMOVE METAL TRASH CAN/ CONCRETE CAN – STORE – RESET IN NEW SIDEWALK.
- (8) REMOVE STREET SECTION FOR RIGHT TURN LANE AND BUS PAD.
- (SC) SAWCUT LINE FOR REMOVALS.
- (9) RED LIGHT CAMERA EQUIPMENT – TO BE RELOCATED BY RED LIGHT.
- (10) REMOVE EAST LOS ANGELES SIGN, STORE, RESET IN NEW SIDEWALK.
- (11) SCE STREET LIGHT – REMOVE, STORE, RESET IN NEW SIDEWALK.
- (12) ONSITE LIGHT BASE WITH BARRICADES – REMOVE.
- (13) WATER SYSTEM FACILITY OF CWS – TO BE RELOCATED/ABANDONED BY CWS.
- (14) REMOVE BUS SHELTER AND BENCH, STORE, RECONDITION, RESET IN NEW SIDEWALK.
- (15) TRAFFIC SIGNAL EQUIPMENT, SEE SHEET TS-1 AND TS-2.
- (16) REMOVE CURB RAMP.
- (17) EXISTING CONCRETE RAMP/ STEP/ WITH WALLS PROTECT IN PLACE.
- (18) REMOVE DRIVEWAY/ CONCRETE.
- (19) REMOVE WALLS/ CURB.
- (20) SCE FACILITIES.
- (21) REMOVE EXISTING METAL STAIRS TO 12' ABOVE NEW GRADE.
- (22) REMOVE JIM'S BURGER BUILDING.
- (23) STRIP POLE OF SIGNS – POLE TO REMAIN.
- (24) GAS COMPANY FACILITIES.
- (25) REMOVE ALLEY ENTRANCE, GUTTER AND AC PAVEMENT.
- (26) REMOVE TREE.

1/27/11
Chattel Architecture Submittal

SCALE IN FEET
1 inch = 10 ft.

CIVIL ENGINEER OF RECORD

CONSULTANT:

AAE INCORPORATED
Municipal Engineering, Programs & Services
1815 E. Heim Avenue, Suite 100
Orange, CA 92865
Tel: (714) 940-0100 Fax: (714) 940-0700
www.aaeinc.com

REGISTERED PROFESSIONAL ENGINEER
KENNETH R. PUTNAM
No. 11733
Exp. 12/31/12
CIVIL
STATE OF CALIFORNIA

CVS pharmacy

STORE NUMBER: 49557
WHITTIER BLVD. AND ATLANTIC BLVD.
LOS ANGELES, CALIFORNIA 90022

DEVELOPER:

CHARLES COMPANY
9034 WEST SUNSET BLVD.
WEST HOLLYWOOD, CA 90069
TEL (310)247-0900
FAX (310) 347-1525

REVISIONS:

DRAWING BY:
DATE:
JOB NUMBER:
TITLE: LOUIS PLACE/SOUTH DEMOLITION PLAN
SHEET NUMBER: C-5

COMMENTS:
NOT RELEASED FOR CONSTRUCTION

811 Know what's below. Call before you dig.

User = Shawnt Babakhanian
Date = Thursday, January 27, 2011 11:55:45 AM
Filename = M:\Charles Company\6066_02 AD\Golden Gate Theater - PS&E\Sheets\Final Design\C04-DEM-CV01-606602.dwg

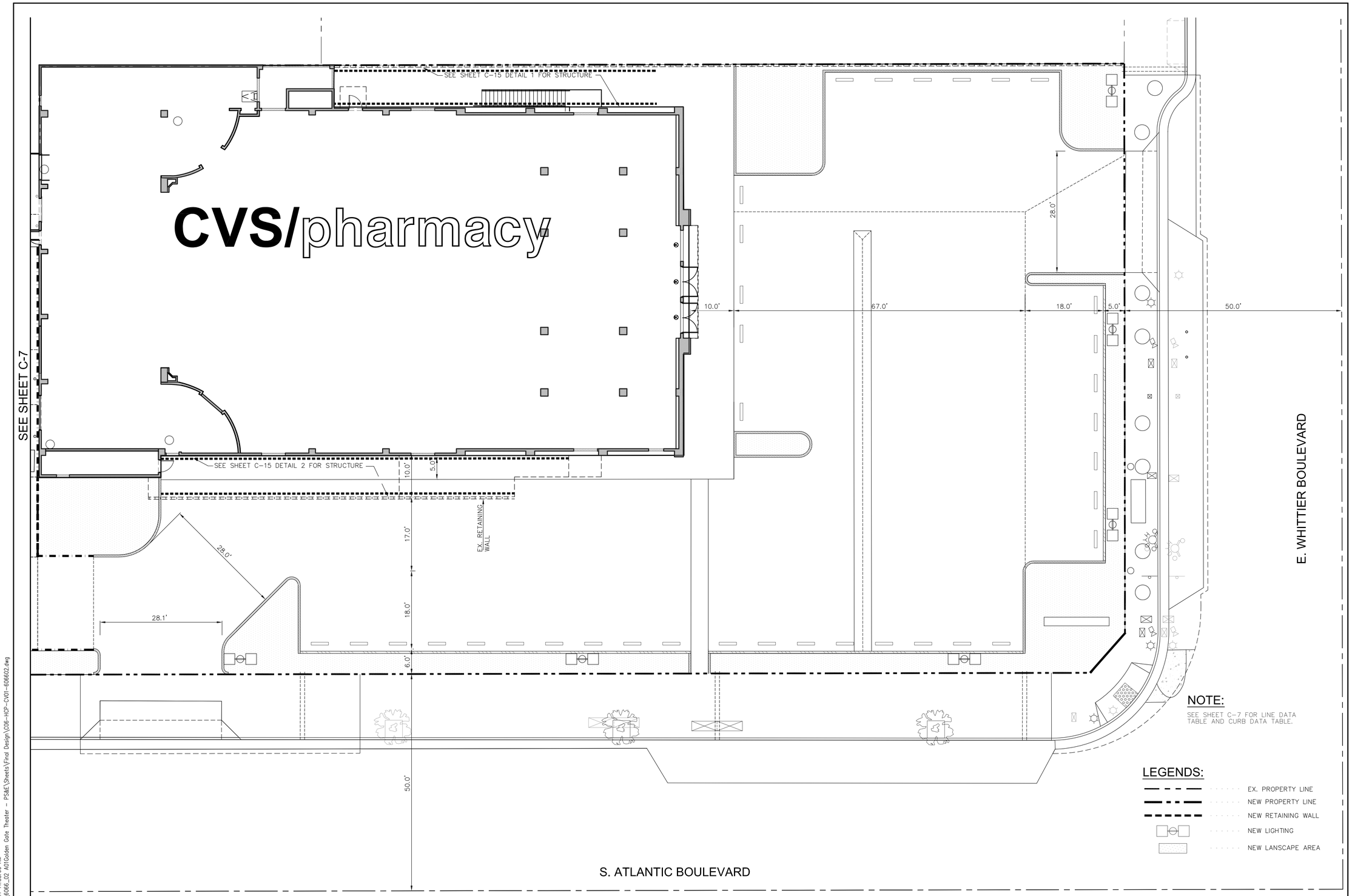

PLAN
SCALE 1"=10'

1/27/11
Chattel Architecture Submittal

10 5 0 10 20
SCALE IN FEET
1 inch = 10 ft.

811 Know what's below. Call before you dig.

User = Shawnt Babakhanian
Date = Thursday, January 27, 2011 11:58:00 AM
Filename = M:\Charles Company\6866_02 AdGolden Gate Theater - PS&E\Sheets\Final Design\C06-HCP-CV01-606602.dwg

CIVIL ENGINEER OF RECORD

CONSULTANT:

AAE INCORPORATED
Municipal Engineering, Programs & Services
1815 E. Heim Avenue, Suite 100
Orange, CA 92865
Tel: (714) 940-0100 Fax: (714) 940-0700
www.aaeinc.com

REGISTERED PROFESSIONAL ENGINEER
KENNETH R. PUTNAM
No. 11733
Exp. 12/31/12
CIVIL
STATE OF CALIFORNIA

CVS pharmacy

STORE NUMBER: 49557
WHITTIER BLVD. AND ATLANTIC BLVD.
LOS ANGELES, CALIFORNIA 90022

DEVELOPER:
CHARLES COMPANY
9034 WEST SUNSET BLVD.
WEST HOLLYWOOD, CA 90069
TEL (310)247-0900
FAX (310) 347-1525

REVISIONS:

DRAWING BY:
DATE:
JOB NUMBER:
TITLE: HORIZONTAL CONTROL PLAN/NORTH
SHEET NUMBER: C-6

COMMENTS:
NOT RELEASED FOR CONSTRUCTION

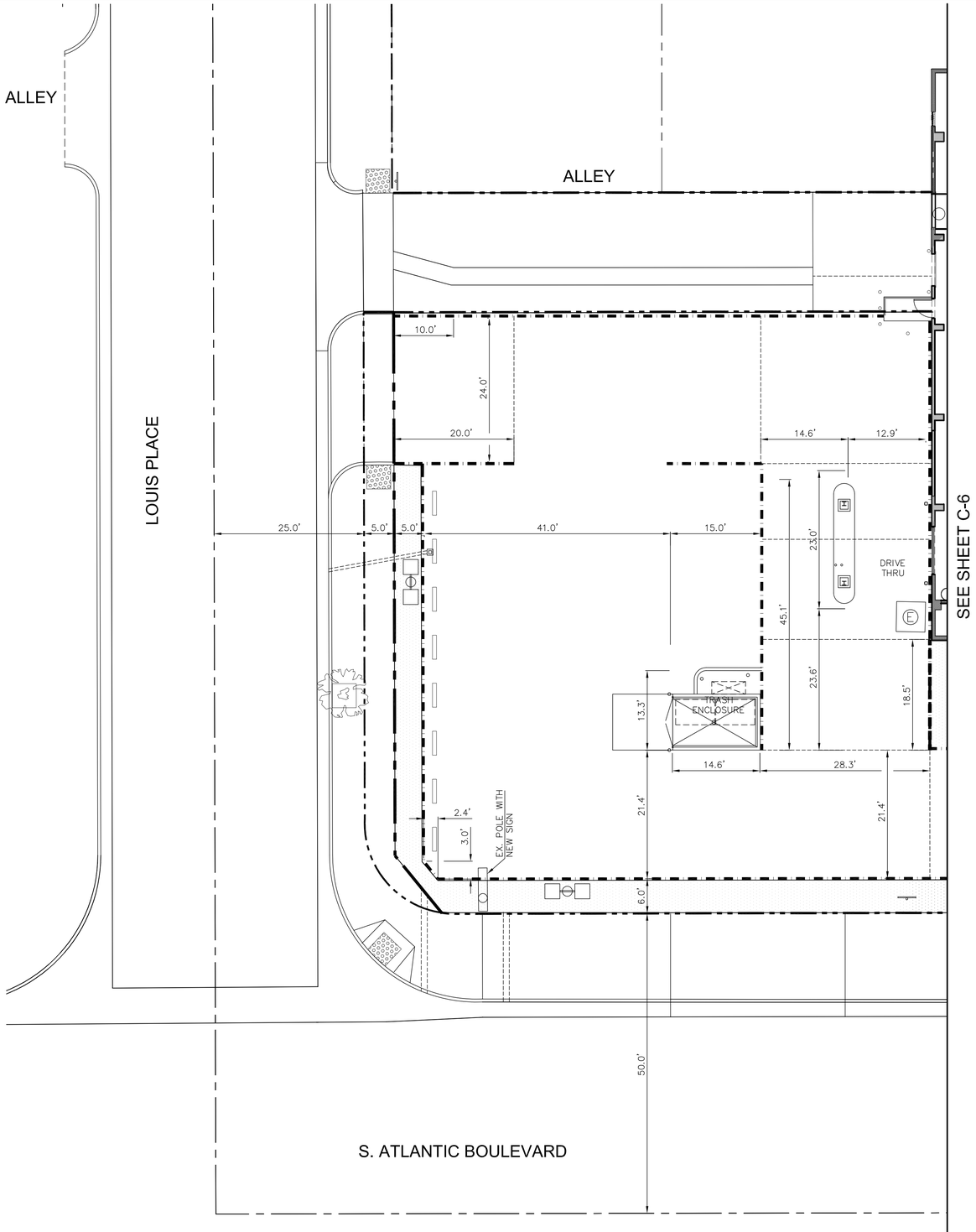

PLAN
SCALE 1"=10'

LINE DATA TABLE		
Line #	Length	Direction
L1	5.74'	S27° 21' 12.36"W
L2	8.54'	S62° 38' 49.47"E
L3	3.64'	N62° 38' 47.64"W
L4	18.69'	N17° 38' 47.64"W
L5	20.45'	N62° 37' 54.35"W
L6	16.59'	S27° 16' 45.56"W
L7	90.00'	S27° 21' 12.24"W
L8	5.14'	N62° 38' 47.64"W
L9	5.13'	S62° 38' 47.64"E
L10	72.50'	N27° 21' 12.36"E
L11	23.33'	N62° 38' 47.64"W
L12	21.00'	N27° 21' 12.36"E
L13	16.65'	S62° 38' 47.64"E
L14	12.19'	S21° 18' 20.78"E
L15	15.45'	S27° 14' 29.15"W
L16	63.50'	N62° 38' 47.64"W
L17	21.53'	S27° 21' 12.36"W
L18	20.03'	N27° 21' 12.36"E
L19	1.50'	N62° 38' 47.64"W
L20	20.15'	S62° 45' 00.65"E
L21	9.97'	S27° 21' 12.36"W
L22	13.18'	S62° 38' 47.64"E
L23	54.00'	S27° 21' 12.36"W
L24	20.80'	S62° 38' 47.64"E
L25	18.00'	N27° 21' 12.36"E
L26	25.10'	S62° 38' 46.14"E
L27	15.00'	S27° 21' 12.36"W
L28	15.00'	S27° 21' 12.36"W
L29	3.00'	S62° 38' 47.64"E

CURVE DATA TABLE				
Curve #	Length	Radius	Delta	Tangent
C1	15.39'	9.80'	90.00'	9.800'
C2	2.36'	1.50'	90.10'	1.503'
C3	3.93'	5.00'	45.00'	2.071'
C4	4.71'	2.00'	135.00'	4.828'
C5	3.93'	2.50'	90.00'	2.500'
C6	4.77'	1.50'	182.00'	86.127'
C7	2.36'	1.50'	90.00'	1.500'
C8	7.07'	4.50'	90.00'	4.500'
C9	4.71'	3.00'	90.00'	3.000'
C10	4.71'	3.00'	90.00'	3.000'
C11	2.36'	1.50'	90.08'	1.502'
C12	2.35'	1.50'	89.90'	1.497'

NOTE:

TABLES FOR SHEETS C-6 AND C-7.

LEGENDS:

- EX. PROPERTY LINE
- NEW PROPERTY LINE
- NEW RETAINING WALL
- NEW LIGHTING
- NEW LANSCAPE AREA

1/27/11
Chattel Architecture Submittal

10 5 0 10 20
SCALE IN FEET
1 inch = 10 ft.

CIVIL ENGINEER OF RECORD

CONSULTANT:

AAE INCORPORATED
Municipal Engineering, Programs & Services
1815 E. Heim Avenue, Suite 100
Orange, CA 92865
Tel: (714) 940-0100 Fax: (714) 940-0700
www.aaeinc.com

REGISTERED PROFESSIONAL ENGINEER
KENNETH R. PUTNAM
No. 11733
Exp. 12/31/12
CIVIL
STATE OF CALIFORNIA

CVS pharmacy

STORE NUMBER: 49557
WHITTIER BLVD. AND ATLANTIC BLVD.
LOS ANGELES, CALIFORNIA 90022

DEVELOPER:

CHARLES COMPANY
9034 WEST SUNSET BLVD.
WEST HOLLYWOOD, CA 90069
TEL (310)247-0900
FAX (310) 347-1525

REVISIONS:

DRAWING BY:

DATE:

JOB NUMBER:

TITLE:
HORIZONTAL CONTROL PLAN/SOUTH

SHEET NUMBER:
C-7

COMMENTS:
NOT RELEASED FOR CONSTRUCTION

User = Shawnt Babakhanian
Date = Thursday, January 27, 2011 11:58:56 AM
Filename = M:\Charles Company\6866_02 AT\Golden Gate Theater - PS&E\Sheets\Final Design\C06-HCP-CV01-606602.dwg
811 Know what's below. Call before you dig.

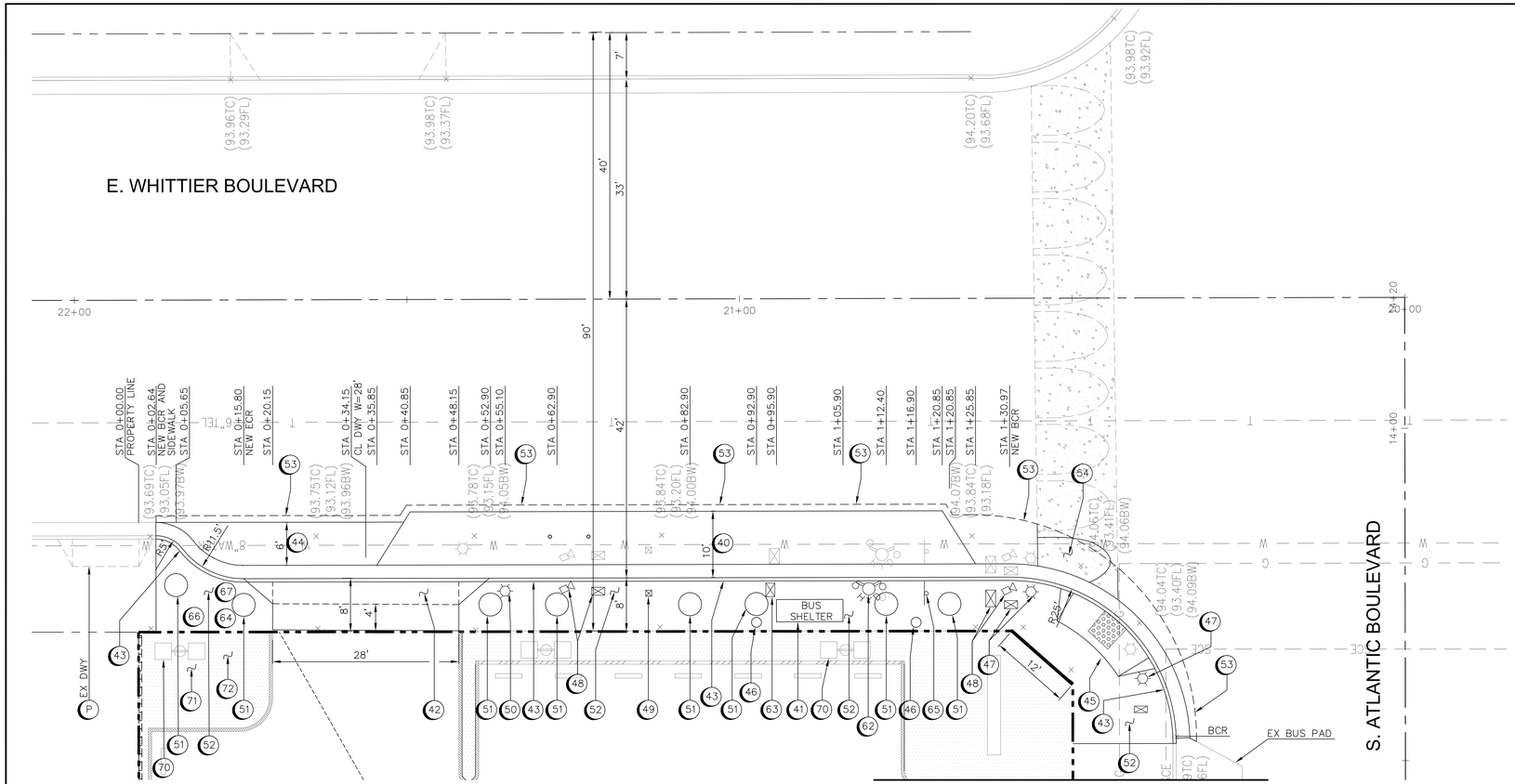

PLAN
SCALE 1"=10'

CONSTRUCTION NOTES:

- (P) PROTECT IN PLACE.
- (40) CONSTRUCT CONCRETE BUS PAD – SPPWC 131–2.
- (41) RELOCATE\MODIFY\REPAINT EXISTING BUS SHELTER TO MINIMUM PROVIDE 3'–6" CLEAR IN FRONT. COORDINATE WITH LA COUNTY DEPARTMENT OF PUBLIC WORKS.
- (42) CONSTRUCT DRIVEWAY APPROACH PER SPPWC 110–2 TYPE B.
- (43) CONSTRUCT NEW CURB AND GUTTER BARRIER PER SPPWC STD. PLAN NO. 120–2 TYPE A2–8(200).
- (44) CONCRETE PAVEMENT REPLACEMENT – SPPWC 132–3/131–2.
- (45) CURB RAMP – SPPWC 111–4 TYPE 3.
- (46) TRASH CAN REPLACEMENT DETAIL 13 ON SHEET C–17.
- (47) RELOCATE/ADJUST TRAFFIC SIGNAL AND STREET LIGHT EQUIPMENT SEE SHEET C–19.
- (48) RELOCATE RED LIGHT CAMERA EQUIPMENT.
- (49) RELOCATE EAST LOS ANGELES SIGN.
- (50) RELOCATE STREET LIGHT POLE–SCE.
- (51) WALK OF FAME PLAQUE–SEE DETAIL 11 ON SHEET C–17.
- (52) NEW SIDEWALK REPLACEMENT PER SPPWC 113–2.
- (53) NEW AC PAVEMENT. ON BASE (CMB).
- (54) CROSSWALK DETAIL – SEE DETAIL 14, COMPLETE FOR WIDENED SECTION. SHEET C–17.
- (61) CONSTRUCT ALLEY LONGITUDINAL GUTTER SPPWC 122–2.
- (62) RELOCATE FIRE HYDRANT WITH VALVES PER CWS PLAN.
- (63) WATER METER PER CWS PLAN.
- (64) FIRE SERVICE CONNECTION PER CWS PLAN.
- (65) BUS SIGN PER MTA/MONTEBELLO TRANSIT LINES.
- (66) IRRIGATION METER – CWS.
- (67) FIRE DEPARTMENT PUMPER CONNECTION.
- (70) PROPOSED ONSITE LIGHTS – SEE ARCHITECTURAL PLANS.
- (71) BF DEVICE FOR IRRIGATION METER.
- (72) BF DEVICE FOR FIRE PROTECTION CONNECTION.

NOTES:

1. SEE SHEET C–11 AND C–12 FOR ONSITE GRADING.
2. SEE SHEET C–13 FOR ONSITE IMPROVEMENTS

1/27/11
Chattel Architecture Submittal

10 5 0 10 20
SCALE IN FEET
1 inch = 10 ft.

CIVIL ENGINEER OF RECORD

CONSULTANT:

AAE INCORPORATED
Municipal Engineering, Programs & Services
1815 E. Heim Avenue, Suite 100
Orange, CA 92865
Tel: (714) 940-0100 Fax: (714) 940-0700
www.aaeinc.com

REGISTERED PROFESSIONAL ENGINEER
KENNETH R. PUTNAM
No. 11733
Exp. 12/31/12
CIVIL
STATE OF CALIFORNIA

CVS pharmacy

STORE NUMBER: 49557
WHITTIER BLVD. AND ATLANTIC BLVD.
LOS ANGELES, CALIFORNIA 90022

DEVELOPER:
CHARLES COMPANY
9034 WEST SUNSET BLVD.
WEST HOLLYWOOD, CA 90069
TEL (310)247–0900
FAX (310) 347–1525

REVISIONS:

DRAWING BY:
DATE:
JOB NUMBER:
TITLE: WHITTIER BLVD. PUBLIC R/W IMPROVEMENT PLAN
SHEET NUMBER: C-8
COMMENTS: NOT RELEASED FOR CONSTRUCTION

811 Know what's below. Call before you dig.

User = Shawnt Babakhanian
Date = Thursday, January 27, 2011 12:00:01 PM
Filename = M:\Charles Company\6066_02 AD\Golden Gate Theater – PS&E\Sheets\Final Design\C08-SIP-CV01-606602.dwg

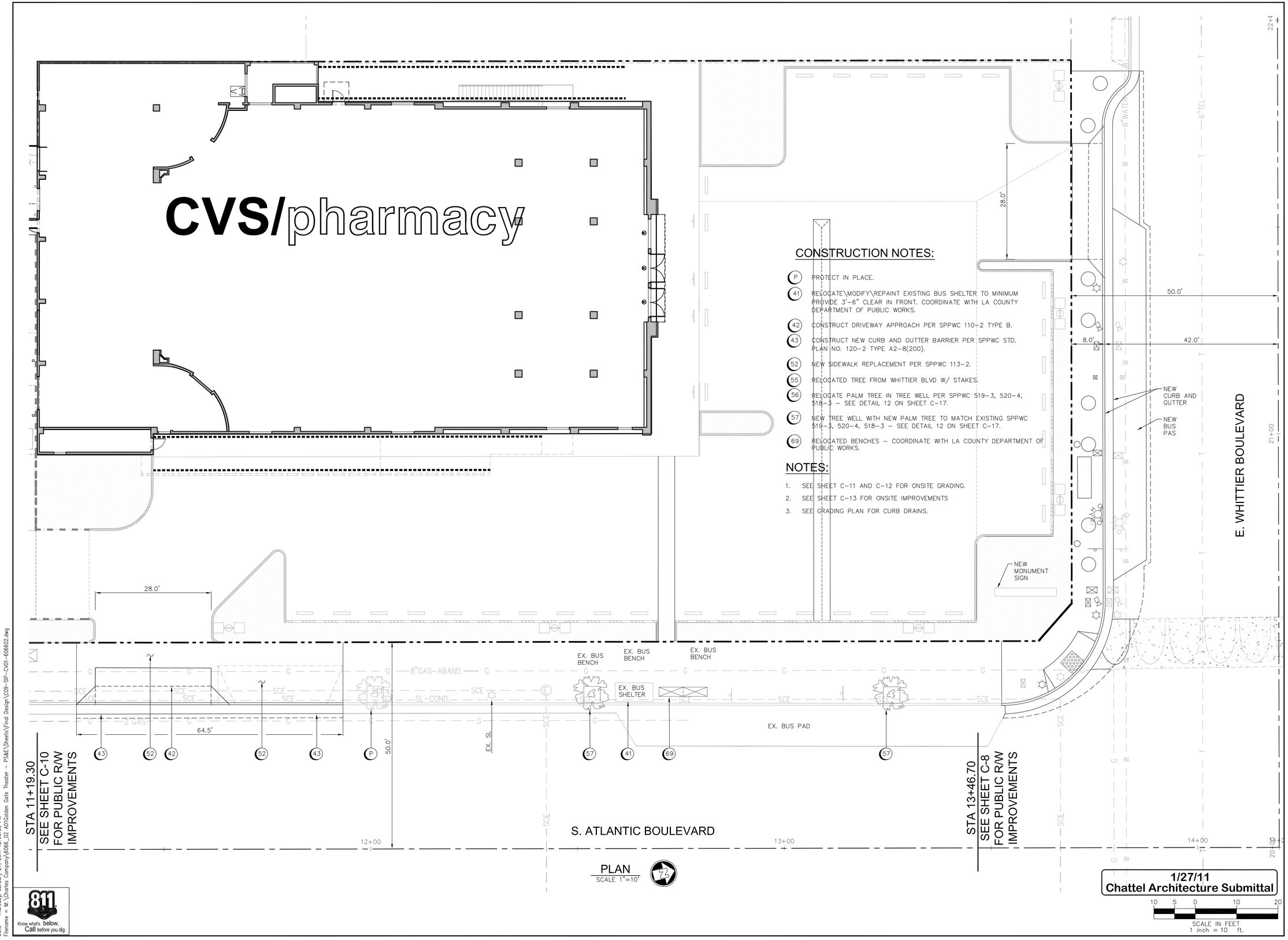

CONSTRUCTION NOTES:

- (P) PROTECT IN PLACE.
- (41) RELOCATE\MODIFY\REPAINT EXISTING BUS SHELTER TO MINIMUM PROVIDE 3'-6" CLEAR IN FRONT. COORDINATE WITH LA COUNTY DEPARTMENT OF PUBLIC WORKS.
- (42) CONSTRUCT DRIVEWAY APPROACH PER SPPWC 110-2 TYPE B.
- (43) CONSTRUCT NEW CURB AND GUTTER BARRIER PER SPPWC STD. PLAN NO. 120-2 TYPE A2-8(200).
- (52) NEW SIDEWALK REPLACEMENT PER SPPWC 113-2.
- (55) RELOCATED TREE FROM WHITTIER BLVD W/ STAKES.
- (56) RELOCATE PALM TREE IN TREE WELL PER SPPWC 519-3, 520-4, 518-3 - SEE DETAIL 12 ON SHEET C-17.
- (57) NEW TREE WELL WITH NEW PALM TREE TO MATCH EXISTING SPPWC 519-3, 520-4, 518-3 - SEE DETAIL 12 ON SHEET C-17.
- (69) RELOCATED BENCHES - COORDINATE WITH LA COUNTY DEPARTMENT OF PUBLIC WORKS.

NOTES:

1. SEE SHEET C-11 AND C-12 FOR ONSITE GRADING.
2. SEE SHEET C-13 FOR ONSITE IMPROVEMENTS
3. SEE GRADING PLAN FOR CURB DRAINS.

PLAN
SCALE 1"=10'

1/27/11
Chattel Architecture Submittal

SCALE IN FEET
1 inch = 10 ft.

811 Know what's below. Call before you dig.

User = Shawnt Babakhanian
Date = Thursday, January 27, 2011 12:00:58 PM
Filename = M:\Charles Company\6466_02 AllGolden Gate Theater - PS&E\Sheets\Final Design\C09-SP-CV01-606602.dwg

CIVIL ENGINEER OF RECORD

CONSULTANT:

AAE INCORPORATED
Municipal Engineering, Programs & Services
1815 E. Heim Avenue, Suite 100
Orange, CA 92865
Tel: (714) 940-0100 Fax: (714) 940-0700
www.aaeinc.com

REGISTERED PROFESSIONAL ENGINEER
KENNETH R. PUTNAM
No. 11733
Exp. 12/31/12
CIVIL
STATE OF CALIFORNIA

CVS pharmacy

STORE NUMBER: 49557
WHITTIER BLVD. AND ATLANTIC BLVD.
LOS ANGELES, CALIFORNIA 90022

DEVELOPER:
CHARLES COMPANY
9034 WEST SUNSET BLVD.
WEST HOLLYWOOD, CA 90069
TEL (310)247-0900
FAX (310) 347-1525

REVISIONS:

DRAWING BY:
DATE:
JOB NUMBER:
TITLE: ATLANTIC BLVD. PUBLIC R/W IMPROVEMENT PLAN
SHEET NUMBER: C-9

COMMENTS:
NOT RELEASED FOR CONSTRUCTION

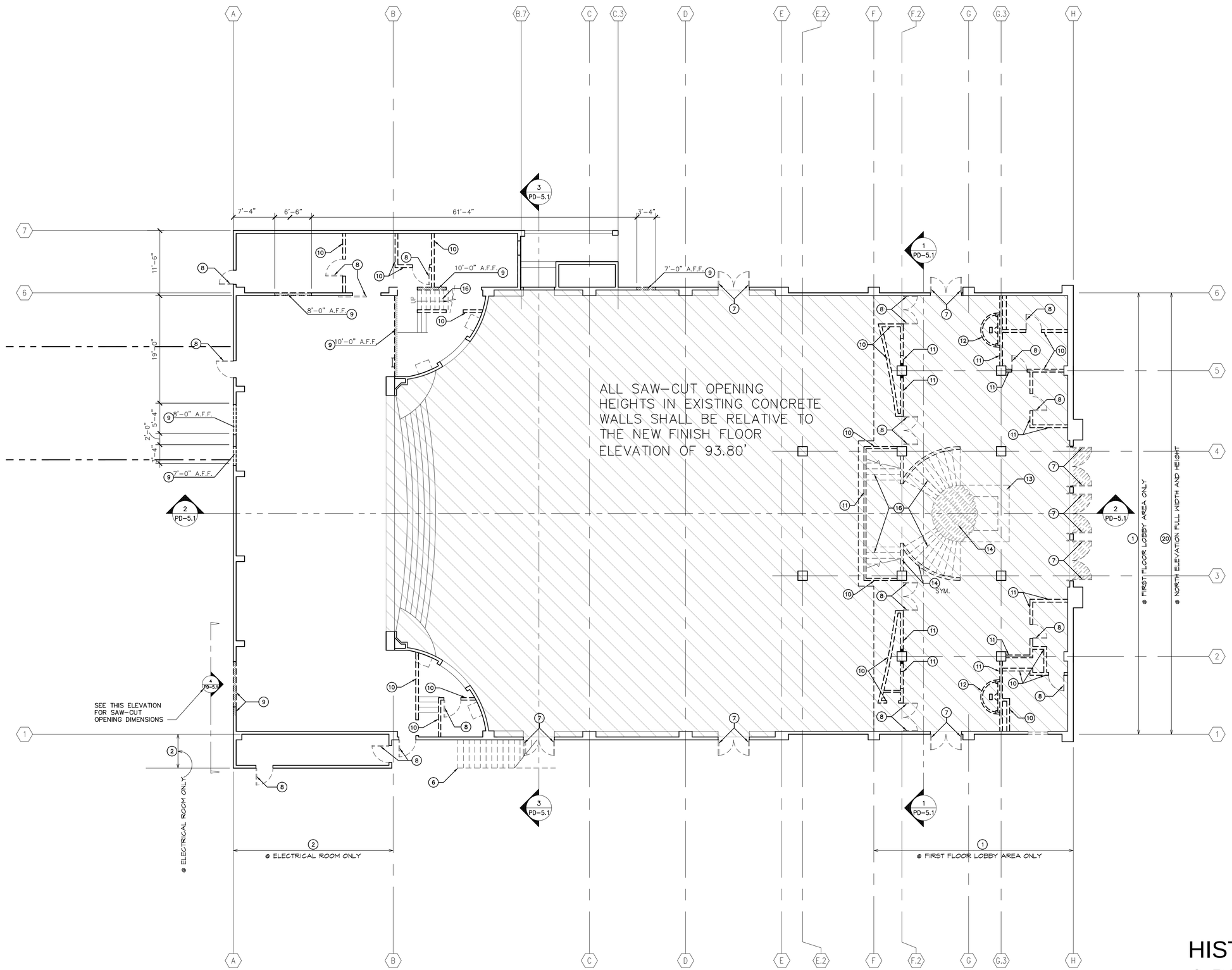

PRESERVATION & DEMOLITION NOTES BY SYMBOL

1. COMPLETELY REMOVE EXISTING CONCRETE FLOOR SLAB.
2. COMPLETELY REMOVE EXISTING METAL ROOF DECK & ROOFING, INCLUDING ALL COPING & FLASHING.
3. COMPLETELY REMOVE EXISTING INTEGRAL CONCRETE FLOOR SLAB & BEAMS.
4. COMPLETELY REMOVE EXISTING MECHANICAL FAN & STEEL-FABRICATED VERTICAL SHAFT.
5. EXISTING CANOPY OVER EXISTING ENTRY DOORS TO BE FULLY RESTORED, MADE WATER-TIGHT, STRUCTURALLY SOUND AND READY FOR NEW DOWN LIGHTS.
6. EXISTING STAIRS AND LANDINGS TO BE REMOVED.
7. EXISTING DOOR TO BE REMOVED AND PRESERVED/ STORED ONSITE.
8. EXISTING DOOR TO BE REMOVED.
9. PROPOSED NEW SAWCUT OPENING IN EXISTING WALL TO BE APPROVED BY STRUCTURAL ENGINEER OF RECORD.
10. EXISTING WALL TO BE REMOVED.
11. REMOVE EXISTING WALL UP TO 3" FROM DECORATIVE MOLDING OR CEILING.
12. REMAINDER OF FOUNTAINS TO BE SALVAGED, CRATED, AND STORED ON SITE. CAP ALL UTILITIES BELOW SLAB.
13. COMPLETELY REMOVE EXISTING CONCESSIONS COUNTER. CAP ALL UTILITY LINES BELOW NEW F.F.
14. EXISTING CONCRETE & PLASTER CLAMSHELL FEATURE TO BE REMOVED AND PRESERVED/ STORED ONSITE.
15. EXISTING STAIR RAILING TO BE REMOVED AND PRESERVED/ STORED ONSITE.
16. EXISTING CONCRETE STAIRS AND LANDINGS TO BE COMPLETELY REMOVED. STAIRS AND LANDING ARE TO BE HAND MEASURED AND FULLY DOCUMENTED FOR POSSIBLE FUTURE RECONSTRUCTION PRIOR TO REMOVAL. CONDITIONS OF REMOVAL TO BE VERIFIED WITH STRUCTURAL ENGINEER OF RECORD, HISTORICAL ARCHITECT & LANDLORD.
17. EXISTING LIGHT FIXTURE TO BE REMOVED AND PRESERVED/ STORED ONSITE.
18. EXISTING DECORATIVE AIR VENT & TRIM, CLEAN & PREPARE FOR PAINTING.
19. EXISTING STEEL GRILLE, CLEAN & PREPARE FOR PAINTING.
20. THE DECORATIVE FEATURES, INCLUDING ORNAMENT AND OPENINGS ON THE NORTH ELEVATION SHALL BE RETAINED AND SHALL BE CLEANED AND MAINTAINED WITH GENTLEST MEANS POSSIBLE AT LESS THAN 400 PSI, TO BE DETERMINED AFTER INSPECTION AND RECOMMENDATION BY A QUALIFIED MASONRY RESTORATION SPECIALIST.

GENERAL PRESERVATION & DEMOLITION NOTES

1. OPENINGS IN-, OR REMOVAL OF- ANY WALLS OR WALLS CONTAINING STRUCTURAL ELEMENTS MUST BE APPROVED BY STRUCTURAL ENGINEER OF RECORD.

2. NO ALTERATION OF EXISTING ARCHITECTURAL OR DECORATIVE ELEMENTS SHALL OCCUR OTHER THAN THOSE SPECIFICALLY DESCRIBED IN THESE DOCUMENTS WITHOUT THE APPROVAL OF THE HISTORICAL ARCHITECT OF RECORD.

3. NO PENETRATIONS THROUGH OR MODIFICATIONS OF EXISTING PLASTER TO BE UNDERTAKEN WITHOUT THE APPROVAL OF THE HISTORICAL ARCHITECT OF RECORD.

4. DETERIORATED HISTORIC FEATURES TO BE REPAIRED. IF BEYOND REPAIR THEY ARE TO BE FULLY DOCUMENTED AND REPLACED TO MATCH ORIGINAL FEATURE.

5. NEW ADDITIONS, EXTERIOR ALTERATIONS, OR RELATED NEW CONSTRUCTION WILL NOT DESTROY HISTORIC MATERIALS, FEATURES, AND SPATIAL RELATIONSHIPS THAT CHARACTERIZE THE PROPERTY. THE NEW WORK WILL BE DIFFERENTIATED FROM THE OLD AND WILL BE COMPATIBLE WITH THE HISTORIC MATERIALS, FEATURES, SIZE, SCALE AND PROPORTION, AND MASSING TO PROTECT THE INTEGRITY OF THE PROPERTY AND ITS ENVIRONMENT.

6. EXTERIOR CONCRETE ELEMENTS THAT HAVE CRACKED, BUT NOT FAILED, TO BE REPAIRED.

7. ALL DIMENSIONS OF, TO OR FROM EXISTING BUILDING ELEMENTS MUST BE VERIFIED IN FIELD.

8. ALL ± HEIGHTS AND DIMENSIONS TO BE VERIFIED IN FIELD.

9. ALL PAINT SELECTIONS AND LOCATIONS TO BE COORDINATED WITH AND APPROVED BY CHATTEL ARCHITECTURE

10. ALL HISTORICAL WALL & CEILING DETAILS AND FINISHES TO BE FULLY ENCAPSULATED PER CONDITIONS OF APPROVAL AND MITIGATION MEASURES REFLECTED ON SHEETS HPD-0.1 & HPD-0.2

11. IN ALL AREAS VISIBLE FROM PROPOSED NEW SALES FLOOR BELOW, EXISTING FINISHES THAT ARE 'GOLD' COLOR SHALL BE RE-PAINTED 'GOLD' TO MATCH; ALL OTHER REMAINING SURFACES SHALL BE PAINTED OFF-WHITE, PER FINISH SCHEDULE ON A-7.2. PRIOR TO ANY RE-PAINTING, ALL HISTORICAL WALL & CEILING DETAILS AND FINISHES TO BE FULLY ENCAPSULATED PER CONDITIONS OF APPROVAL AND MITIGATION MEASURES REFLECTED ON SHEETS HPD-0.1 & HPD-0.2

HISTORICAL PRESERVATION & DEMOLITION FLOOR PLAN

18662 MacArthur Blvd.
Ste.200
Irvine, California 92612
(949) 796-3838
www.rkaa.com

ROBERT KABLECK
Architects And Associates, Inc.

LICENSED ARCHITECT
CRAIG JOHNSON
NO. C12434
STATE OF CALIFORNIA

COPYRIGHT 2007 ALL RIGHTS RESERVED. THIS DRAWING IS AN INSTRUMENT OF SERVICE. THIS DRAWING IS AN INSTRUMENT OF SERVICE. IT IS THE PROPERTY OF ROBERT KUBECK ARCHITECTS, AND MUST BE RETURNED UPON REQUEST. COPYING OR REPRODUCTION HERE OF USED WITHOUT WRITTEN PERMISSION OF THE ARCHITECT.

date:	
10/4/10	Bldg. Dept. Submittal
10/15/10	Health Dept. Submittal
1/6/11	Chattel Architecture Submittal
1/27/11	Chattel Architecture Submittal

NOTICE OF ALTERNATE BILLING OR PAYMENT CYCLE: THIS CONTRACT MAY ALLOW THE OWNER TO ALTERNATE THE BILLING CYCLE OR PAYMENT TO ALTERNATE IN BILLING CYCLES OTHER THAN MONTHLY, BUT IN NO EVENT SHALL THE CONTRACT MAY ALLOW THE OWNER TO ALTERNATE THE BILLING CYCLE OR PAYMENT TO ALTERNATE AFTER CERTIFICATION AND APPROVAL OF BILLING HAS BEEN OBTAINED. WRITTEN DESCRIPTION OF THE BILLING CYCLE AND PAYMENT PROCEDURE FOR THIS PROJECT IS AVAILABLE FROM THE OWNER AT THE OFFICES OF

OR HIS DESIGNATED AGENT SHALL PROVIDE THIS WRITTEN DESCRIPTION ON REQUEST.

DEVELOPER:
CHARLES COMPANY
9034 W. SUNSET BLVD.
WEST HOLLYWOOD
CA 90069
TEL (310) 247-0900
FAX (310) 247-1525

cvs pharmacy
STORE #4524
909 S. ATLANTIC BLVD
LOS ANGELES, CA

design	RKA
drawn	RKA
check	RKA

sheet HPD of -1.1
job 09151

1/27/2011 3:20:08 PM

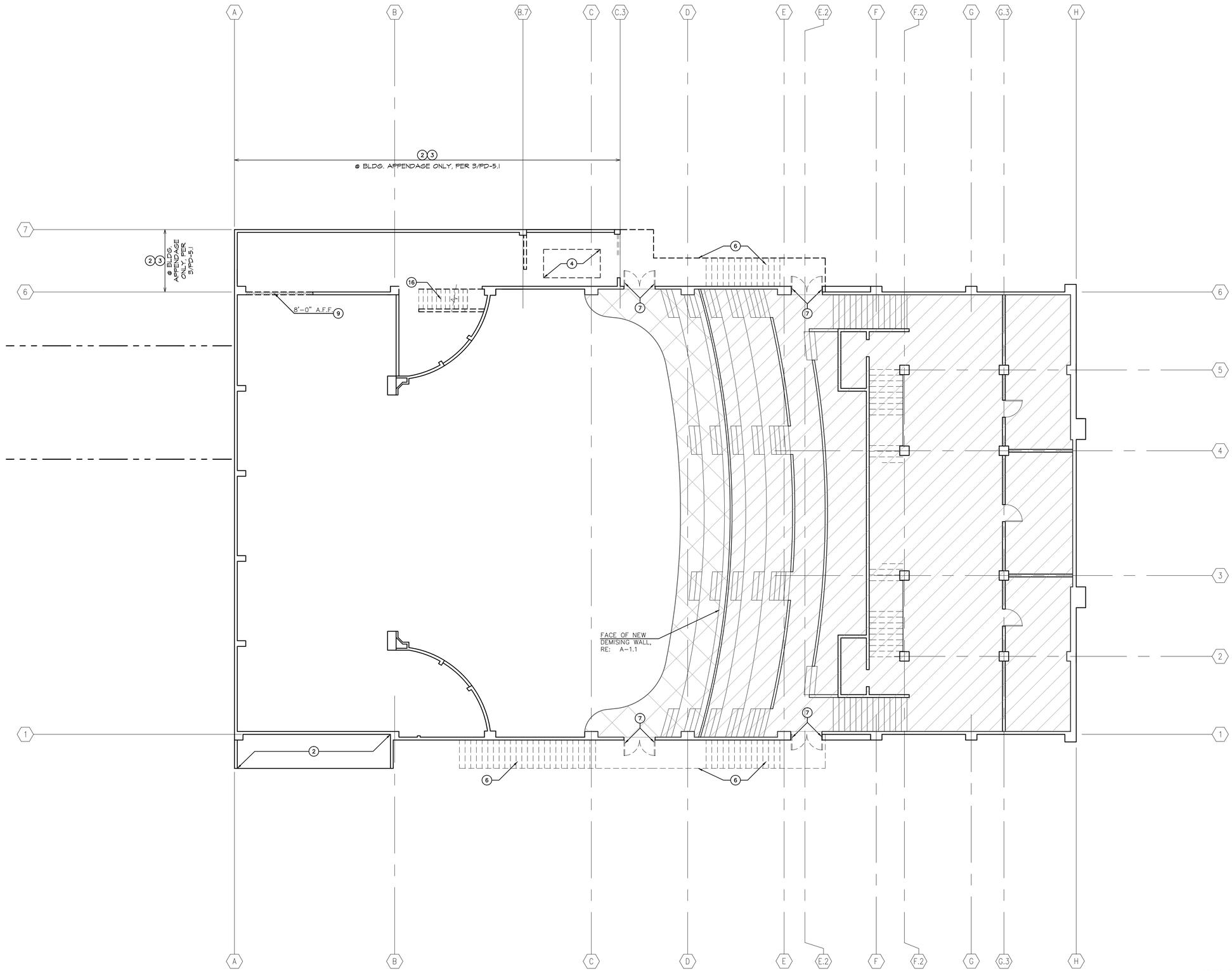

PRESERVATION & DEMOLITION NOTES BY SYMBOL

1. COMPLETELY REMOVE EXISTING CONCRETE FLOOR SLAB.
2. COMPLETELY REMOVE EXISTING METAL ROOF DECK & ROOFING, INCLUDING ALL COPING & FLASHING.
3. COMPLETELY REMOVE EXISTING INTEGRAL CONCRETE FLOOR SLAB & BEAMS.
4. COMPLETELY REMOVE EXISTING MECHANICAL FAN & STEEL-FABRICATED VERTICAL SHAFT.
5. (NOT USED)
6. EXISTING STAIRS AND LANDINGS TO BE REMOVED.
7. EXISTING DOOR TO BE REMOVED AND PRESERVED/ STORED ONSITE.
8. EXISTING DOOR TO BE REMOVED.
9. PROPOSED NEW SAWCUT OPENING IN EXISTING WALL TO BE APPROVED BY STRUCTURAL ENGINEER OF RECORD.
10. EXISTING WALL TO BE REMOVED.
11. REMOVE EXISTING WALL UP TO 3" FROM DECORATIVE MOLDING OR CEILING.
12. REMAINDER OF FOUNTAINS TO BE SALVAGED, CRATED, AND STORED ON SITE. CAP ALL UTILITIES BELOW SLAB.
13. COMPLETELY REMOVE EXISTING CONCESSIONS COUNTER. CAP ALL UTILITY LINES BELOW NEW F.F.
14. EXISTING CONCRETE & PLASTER CLAMSHELL FEATURE TO BE REMOVED AND PRESERVED/ STORED ONSITE.
15. EXISTING STAIR RAILING TO BE REMOVED AND PRESERVED/ STORED ONSITE.
16. EXISTING CONCRETE STAIRS AND LANDINGS TO BE COMPLETELY REMOVED. STAIRS AND LANDING ARE TO BE HAND MEASURED AND FULLY DOCUMENTED FOR POSSIBLE FUTURE RECONSTRUCTION PRIOR TO REMOVAL. CONDITIONS OF REMOVAL TO BE VERIFIED WITH STRUCTURAL ENGINEER OF RECORD, HISTORICAL ARCHITECT & LANDLORD.
17. EXISTING LIGHT FIXTURE TO BE REMOVED AND PRESERVED/ STORED ONSITE.
18. EXISTING DECORATIVE AIR VENT & TRIM, CLEAN & PREPARE FOR PAINTING.
19. EXISTING STEEL GRILLE, CLEAN & PREPARE FOR PAINTING.
20. THE DECORATIVE FEATURES, INCLUDING ORNAMENT AND OPENINGS ON THE NORTH ELEVATION SHALL BE RETAINED AND SHALL BE CLEANED AND MAINTAINED WITH GENTLEST MEANS POSSIBLE AT LESS THAN 400 PSI, TO BE DETERMINED AFTER INSPECTION AND RECOMMENDATION BY A QUALIFIED MASONRY RESTORATION SPECIALIST.

GENERAL PRESERVATION & DEMOLITION NOTES

1. OPENINGS IN-, OR REMOVAL OF- ANY WALLS OR WALLS CONTAINING STRUCTURAL ELEMENTS MUST BE APPROVED BY STRUCTURAL ENGINEER OF RECORD.

2. NO ALTERATION OF EXISTING ARCHITECTURAL OR DECORATIVE ELEMENTS SHALL OCCUR OTHER THAN THOSE SPECIFICALLY DESCRIBED IN THESE DOCUMENTS WITHOUT THE APPROVAL OF THE HISTORICAL ARCHITECT OF RECORD.

3. NO PENETRATIONS THROUGH OR MODIFICATIONS OF EXISTING PLASTER TO BE UNDERTAKEN WITHOUT THE APPROVAL OF THE HISTORICAL ARCHITECT OF RECORD.

4. DETERIORATED HISTORIC FEATURES TO BE REPAIRED. IF BEYOND REPAIR THEY ARE TO BE FULLY DOCUMENTED AND REPLACED TO MATCH ORIGINAL FEATURE.

5. NEW ADDITIONS, EXTERIOR ALTERATIONS, OR RELATED NEW CONSTRUCTION WILL NOT DESTROY HISTORIC MATERIALS, FEATURES, AND SPATIAL RELATIONSHIPS THAT CHARACTERIZE THE PROPERTY. THE NEW WORK WILL BE DIFFERENTIATED FROM THE OLD AND WILL BE COMPATIBLE WITH THE HISTORIC MATERIALS, FEATURES, SIZE, SCALE AND PROPORTION, AND MASSING TO PROTECT THE INTEGRITY OF THE PROPERTY AND ITS ENVIRONMENT.

6. EXTERIOR CONCRETE ELEMENTS THAT HAVE CRACKED, BUT NOT FAILED, TO BE REPAIRED.

7. ALL DIMENSIONS OF, TO OR FROM EXISTING BUILDING ELEMENTS MUST BE VERIFIED IN FIELD.

8. ALL ± HEIGHTS AND DIMENSIONS TO BE VERIFIED IN FIELD.

9. ALL PAINT SELECTIONS AND LOCATIONS TO BE COORDINATED WITH AND APPROVED BY CHATTEL ARCHITECTURE

10. ALL HISTORICAL WALL & CEILING DETAILS AND FINISHES TO BE FULLY ENCAPSULATED PER CONDITIONS OF APPROVAL AND MITIGATION MEASURES REFLECTED ON SHEETS HPD-0.1 & HPD-0.2

11. IN ALL AREAS VISIBLE FROM PROPOSED NEW SALES FLOOR BELOW, EXISTING FINISHES THAT ARE 'GOLD' COLOR SHALL BE RE-PAINTED 'GOLD' TO MATCH; ALL OTHER REMAINING SURFACES SHALL BE PAINTED OFF-WHITE, PER FINISH SCHEDULE ON A-7.2. PRIOR TO ANY RE-PAINTING, ALL HISTORICAL WALL & CEILING DETAILS AND FINISHES TO BE FULLY ENCAPSULATED PER CONDITIONS OF APPROVAL AND MITIGATION MEASURES REFLECTED ON SHEETS HPD-0.1 & HPD-0.2

MITIGATION MEASURE 3.2.6: DECORATIVE FEATURES, INCLUDING ORNAMENT AND OPENINGS ON THE NORTH ELEVATION SHALL BE RETAINED AND SHALL BE CLEANED AND MAINTAINED WITH GENTLEST MEANS POSSIBLE AT LESS THAN 400 PSI, TO BE DETERMINED AFTER INSPECTION AND RECOMMENDATION BY A QUALIFIED MASONRY RESTORATION SPECIALIST.

HISTORIC PRESERVATION & DEMOLITION MEZZANINE & LOWER BALCONY FLOOR PLAN

18662 MacArthur Blvd.
Ste 200
Irvine, California 92612
(949) 796-3838
www.rkaa.com

ROBERT KABLECK Architects And Associates, Inc.

LICENSED ARCHITECT
CRAIG JOHNSON
NO. C12434
STATE OF CALIFORNIA

COPYRIGHT 2011 ALL RIGHTS RESERVED.
THIS DOCUMENT IS THE PROPERTY OF ROBERT KABLECK. THIS DRAWING IS AN INSTRUMENT OF SERVICE. IT IS THE PROPERTY OF ROBERT KABLECK ARCHITECTS, AND MUST NOT BE USED FOR ANY PURPOSE WITHOUT OR REPRODUCTION HERE OF USED WITHOUT WRITTEN PERMISSION OF THE ARCHITECT.

date:	
10/4/10	Bldg. Dept. Submittal
10/15/10	Health Dept. Submittal
1/6/11	Chattel Architecture Submittal
1/27/11	Chattel Architecture Submittal

NOTICE OF ALTERNATE BILLING OR PAYMENT CYCLE: THIS CONTRACT MAY REQUIRE THE OWNER TO ACQUIRE THE DEMOLITION OF BUILDER OR CONTRACTOR'S SERVICES, MATERIALS, OR OTHER ITEMS. THE CONTRACT MAY ALSO REQUIRE THE OWNER TO MAKE PAYMENT ON SOME ALTERNATIVE SCHEDULE OR CYCLE OTHER THAN THE CONSTRUCTION PROGRESS AND ESTIMATES. A WRITTEN DESCRIPTION OF SUCH OTHER BILLING AND/OR CYCLE APPLICABLE TO THE CONTRACT IS AVAILABLE FROM THE OWNER AT THE OFFICES OF

OR HIS DESIGNATED AGENT SHALL PROVIDE THIS WRITTEN DESCRIPTION ON REQUEST.

DEVELOPER:
CHARLES COMPANY
9034 W. SUNSET BLVD
WEST HOLLYWOOD
CA 90069
TEL (310) 247-0900
FAX (310) 247-1525

cvs pharmacy
STORE #4524
909 S. ATLANTIC BLVD
LOS ANGELES, CA

design	RKA	check	RKA
drawn	RKA		

sheet HPD of -1.2 job 09151

1/27/2011 3:20:55 PM

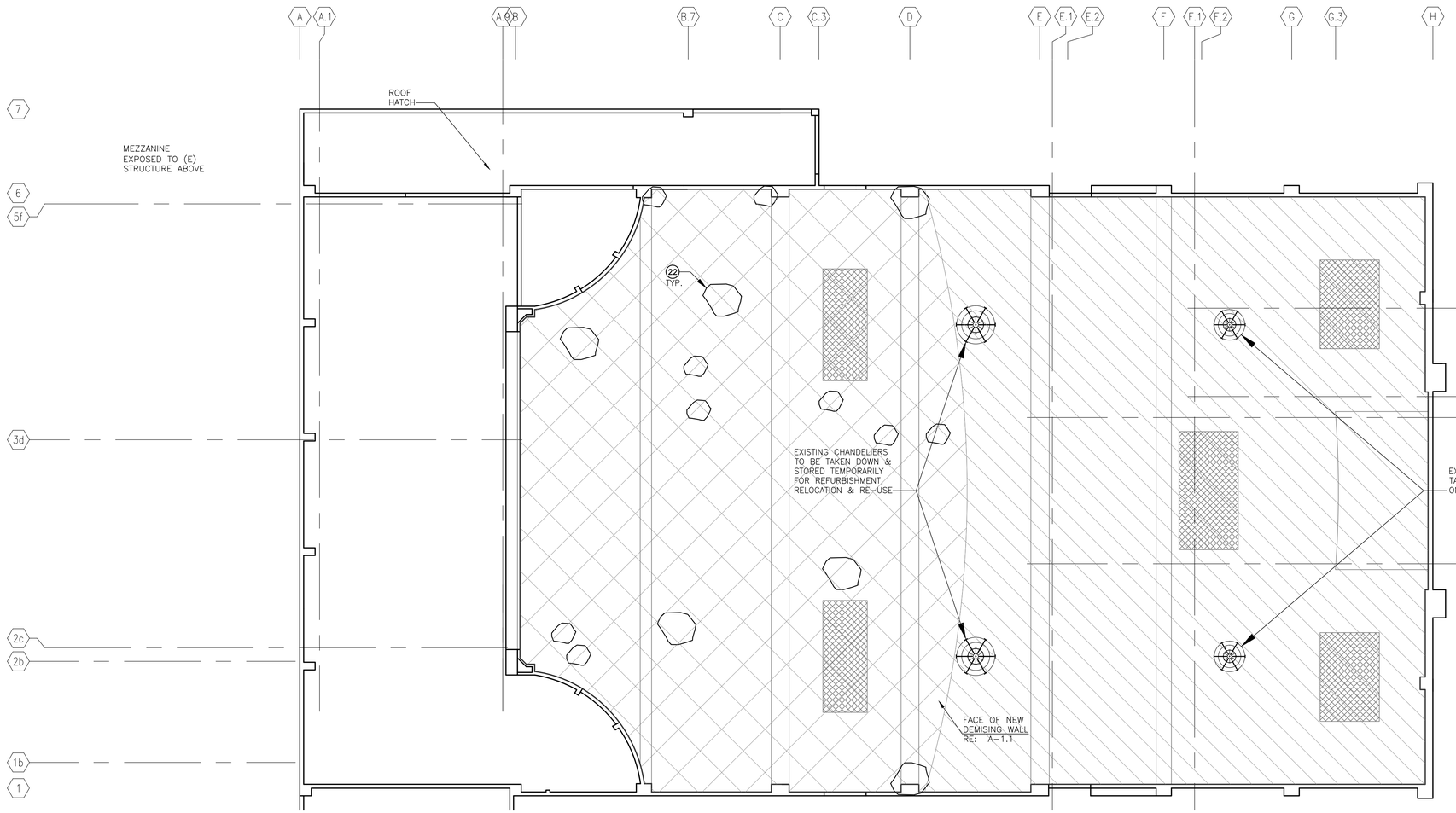

HISTORIC PRESERVATION & DEMOLITION UPPER REFLECTED CEILING PLAN

2 HPD-3.1.1

SCALE: 1/8" = 1'-0"

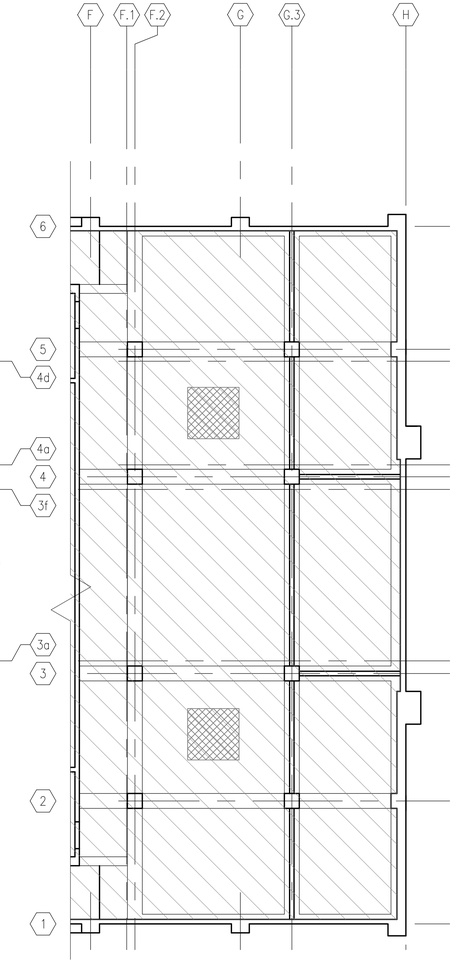

HISTORIC PRESERVATION & DEMOLITION MEZZANINE REFLECTED CEILING PLAN

1 HPD-3.1.1

SCALE: 1/8" = 1'-0"

PRESERVATION & DEMOLITION NOTES BY SYMBOL

1. COMPLETELY REMOVE EXISTING CONCRETE FLOOR SLAB.
2. COMPLETELY REMOVE EXISTING METAL ROOF DECK & ROOFING, INCLUDING ALL COPING & FLASHING.
3. COMPLETELY REMOVE EXISTING INTEGRAL CONCRETE FLOOR SLAB & BEAMS.
4. COMPLETELY REMOVE EXISTING MECHANICAL FAN & STEEL-FABRICATED VERTICAL SHAFT.
5. EXISTING CANOPY OVER EXISTING ENTRY DOORS TO BE FULLY RESTORED, MADE WATER-TIGHT, STRUCTURALLY SOUND AND READY FOR NEW DOWN LIGHTS.
6. EXISTING STAIRS AND LANDINGS TO BE REMOVED.
7. EXISTING DOOR TO BE REMOVED AND PRESERVED/ STORED ONSITE.
8. EXISTING DOOR TO BE REMOVED.
9. PROPOSED NEW SAWCUT OPENING IN EXISTING WALL TO BE APPROVED BY STRUCTURAL ENGINEER OF RECORD.
10. EXISTING WALL TO BE REMOVED.
11. REMOVE EXISTING WALL UP TO 2" FROM DECORATIVE MOLDING OR CEILING.
12. REMAINDER OF FOUNTAINS TO BE SALVAGED, CRATED, AND STORED ON SITE. CAP ALL UTILITIES BELOW SLAB.
13. COMPLETELY REMOVE EXISTING CONCESSIONS COUNTER. CAP ALL UTILITY LINES BELOW NEW F.F.
14. EXISTING CONCRETE & PLASTER CLAMSHELL FEATURE TO BE REMOVED AND PRESERVED/ STORED ONSITE.
15. EXISTING STAIR RAILING TO BE REMOVED AND PRESERVED/ STORED ONSITE.
16. EXISTING CONCRETE STAIRS AND LANDINGS TO BE COMPLETELY REMOVED. STAIRS AND LANDING ARE TO BE HAND MEASURED AND FULLY DOCUMENTED FOR POSSIBLE FUTURE RECONSTRUCTION PRIOR TO REMOVAL. CONDITIONS OF REMOVAL TO BE VERIFIED WITH STRUCTURAL ENGINEER OF RECORD, HISTORICAL ARCHITECT & LANDLORD.
17. EXISTING DECORATIVE LIGHT FIXTURE TO BE RESTORED IN PLACE.
18. EXISTING DECORATIVE AIR VENT & TRIM, CLEAN & PREPARE FOR PAINTING.
19. EXISTING STEEL GRILLE, CLEAN & PREPARE FOR PAINTING.
20. THE DECORATIVE FEATURES, INCLUDING ORNAMENT AND OPENINGS ON THE NORTH ELEVATION SHALL BE RETAINED AND SHALL BE CLEANED AND MAINTAINED WITH GENTLEST MEANS POSSIBLE AT LESS THAN 400 PSI, TO BE DETERMINED AFTER INSPECTION AND RECOMMENDATION BY A QUALIFIED MASONRY RESTORATION SPECIALIST.
21. PROVIDE 3'-4" WIDE SLOT CUT IN CEILING FOR INSTALLATION OF NEW STEEL BEAM. PATCH OPENING TO MATCH EXISTING CEILING FINISH.
22. INDICATES APPROXIMATE AREA/ LOCATION OF DAMAGED PLASTER, CORNICE, CAPITOL OR TRIM TO BE PATCHED TO MATCH EXISTING HISTORICAL FINISHES, ENCAPSULATED & REFINISHED AS STIPULATED PER SHEETS HPD-0.1 & HPD-0.2. NOTE THAT THE AREAS INDICATED DO NOT CONSTITUTE ALL OF THE HISTORICAL FINISHES REQUIRED TO BE PATCHED. CHATTEL ARCHITECTURE MUST FIELD-VERIFY THE ULTIMATE EXTENT OF ALL PATCHED FINISHES.
23. EXISTING DECORATIVE LIGHT FIXTURE TO BE REMOVED, RESTORED & RELOCATED. SEE SHEET A-3.1
24. EXISTING CANOPY OVER EXISTING ENTRY DOORS TO BE FULLY RESTORED, MADE WATER-TIGHT, STRUCTURALLY SOUND AND READY FOR NEW DOWN LIGHTS.
25. ALL PAINT SELECTIONS AND LOCATIONS TO BE COORDINATED WITH AND APPROVED BY CHATTEL ARCHITECTURE

GENERAL PRESERVATION & DEMOLITION NOTES

1. OPENINGS IN-, OR REMOVAL OF- ANY WALLS OR WALLS CONTAINING STRUCTURAL ELEMENTS MUST BE APPROVED BY STRUCTURAL ENGINEER OF RECORD.

2. NO ALTERATION OF EXISTING ARCHITECTURAL OR DECORATIVE ELEMENTS SHALL OCCUR OTHER THAN THOSE SPECIFICALLY DESCRIBED IN THESE DOCUMENTS WITHOUT THE APPROVAL OF THE HISTORICAL ARCHITECT OF RECORD.

3. NO PENETRATIONS THROUGH OR MODIFICATIONS OF EXISTING PLASTER TO BE UNDERTAKEN WITHOUT THE APPROVAL OF THE HISTORICAL ARCHITECT OF RECORD.

4. DETERIORATED HISTORIC FEATURES TO BE REPAIRED. IF BEYOND REPAIR THEY ARE TO BE FULLY DOCUMENTED AND REPLACED TO MATCH ORIGINAL FEATURE.

5. NEW ADDITIONS, EXTERIOR ALTERATIONS, OR RELATED NEW CONSTRUCTION WILL NOT DESTROY HISTORIC MATERIALS, FEATURES, AND SPATIAL RELATIONSHIPS THAT CHARACTERIZE THE PROPERTY. THE NEW WORK WILL BE DIFFERENTIATED FROM THE OLD AND WILL BE COMPATIBLE WITH THE HISTORIC MATERIALS, FEATURES, SIZE, SCALE AND PROPORTION, AND MASSING TO PROTECT THE INTEGRITY OF THE PROPERTY AND ITS ENVIRONMENT.

6. EXTERIOR CONCRETE ELEMENTS THAT HAVE CRACKED, BUT NOT FAILED, TO BE REPAIRED.

7. ALL DIMENSIONS OF, TO OR FROM EXISTING BUILDING ELEMENTS MUST BE VERIFIED IN FIELD.

8. ALL ± HEIGHTS AND DIMENSIONS TO BE VERIFIED IN FIELD.

9. ALL PAINT SELECTIONS AND LOCATIONS TO BE COORDINATED WITH AND APPROVED BY CHATTEL ARCHITECTURE

10. ALL HISTORICAL WALL & CEILING DETAILS AND FINISHES TO BE FULLY ENCAPSULATED PER CONDITIONS OF APPROVAL AND MITIGATION MEASURES REFLECTED ON SHEETS HPD-0.1 & HPD-0.2

11. IN ALL AREAS VISIBLE FROM PROPOSED NEW SALES FLOOR BELOW, EXISTING FINISHES THAT ARE 'GOLD' COLOR SHALL BE RE-PAINTED 'GOLD' TO MATCH; ALL OTHER REMAINING SURFACES SHALL BE PAINTED OFF-WHITE, PER FINISH SCHEDULE ON A-7.2. PRIOR TO ANY RE-PAINTING, ALL HISTORICAL WALL & CEILING DETAILS AND FINISHES TO BE FULLY ENCAPSULATED PER CONDITIONS OF APPROVAL AND MITIGATION MEASURES REFLECTED ON SHEETS HPD-0.1 & HPD-0.2

12. ALL FIRE SPRINKLER PENETRATIONS THROUGH HISTORICAL FINISHES HALL BE LOCATED SO A TO MINIMIZE, TOT HE GREATEST DEGREE POSSIBLE, DAMAGE TO THE IMMEDIATELY SURROUNDING SURFACES. THOSE PENETRATIONS OCCURRING IN THE AREAS TO REMAIN EXPOSED TO THE PUBLIC SHALL BE PATCHED TO MATCH THE APPEARANCE OF THE SURROUNDING FINISH MATERIALS(S). FINAL LOCATION OF ALL HEADS PENETRATING HISTORICAL FINISHES, WHETHER EXPOSED TO THE PUBLIC OR NOT, SHALL BE COORDINATED WITH CHATTEL ARCHITECTURE PRIOR TO MAKING THOSE PENETRATIONS TO THE MAXIMUM EXTENT FEASIBLE, PENETRATIONS WILL BE MADE IN FLAT PLASTER AREAS AVOIDING TRIM.

1/27/2011 3:03:40 PM

18662 MacArthur Blvd.
Ste.200
Irvine, California 92612
(949) 796-3838
www.rkaa.com

ROBERT KABLECK ASSOCIATES
Architects And Associates, Inc.

LICENSED ARCHITECT
CRAIG JOHNSON
NO. C12434
STATE OF CALIFORNIA

COPYRIGHT 2001 ALL RIGHTS RESERVED.
THIS DRAWING IS AN INSTRUMENT OF SERVICE. IT IS THIS DRAWING IS AN INSTRUMENT OF SERVICE. IT IS THE PROPERTY OF ROBERT KUBECK ARCHITECTS, AND MUST BE RETURNED UPON REQUEST. COPYING OR REPRODUCTION HERE OF USED WITHOUT WRITTEN PERMISSION OF THE ARCHITECT.

date:	
10/4/10	Bldg. Dept. Submittal
10/15/10	Health Dept. Submittal
1/6/11	Chattel Architecture Submittal
1/27/11	Chattel Architecture Submittal

NOTICE OF ALTERNATE BILLING OR PAYMENT CYCLE: THIS CONTRACT MAY ALLOW THE OWNER TO DECLARE THE SUBMISSION OF BILLINGS ON A DATE OTHER THAN THE 25TH OF EACH MONTH, OR ON A DATE THAT IS NOT THIRTY (30) DAYS AFTER THE DATE. THIS CONTRACT MAY ALLOW THE OWNER TO AVOID PAYMENT ON SOME ALTERNATIVE CYCLE BILLINGS. IF THE OWNER DOES DECLARE ALTERNATE BILLING AND ESTIMATES, A WRITTEN DESCRIPTION OF SUCH ALTERNATE BILLING AND/OR CYCLE APPLICABLE TO THE PROJECT IS AVAILABLE FROM THE OWNER AT THE OFFICES OF

OR HIS DESIGNATED AGENT SHALL PROVIDE THIS WRITTEN DESCRIPTION ON REQUEST.

DEVELOPER:
CHARLES COMPANY
9034 W. SUNSET BLVD.
WEST HOLLYWOOD
CA 90069
TEL (310) 247-0900
FAX (310) 247-1525

cvs pharmacy
STORE #4524
909 S. ATLANTIC BLVD
LOS ANGELES, CA

design RKA
drawn RKA
check RKA

sheet HPD-3.1.1 of
job 09151

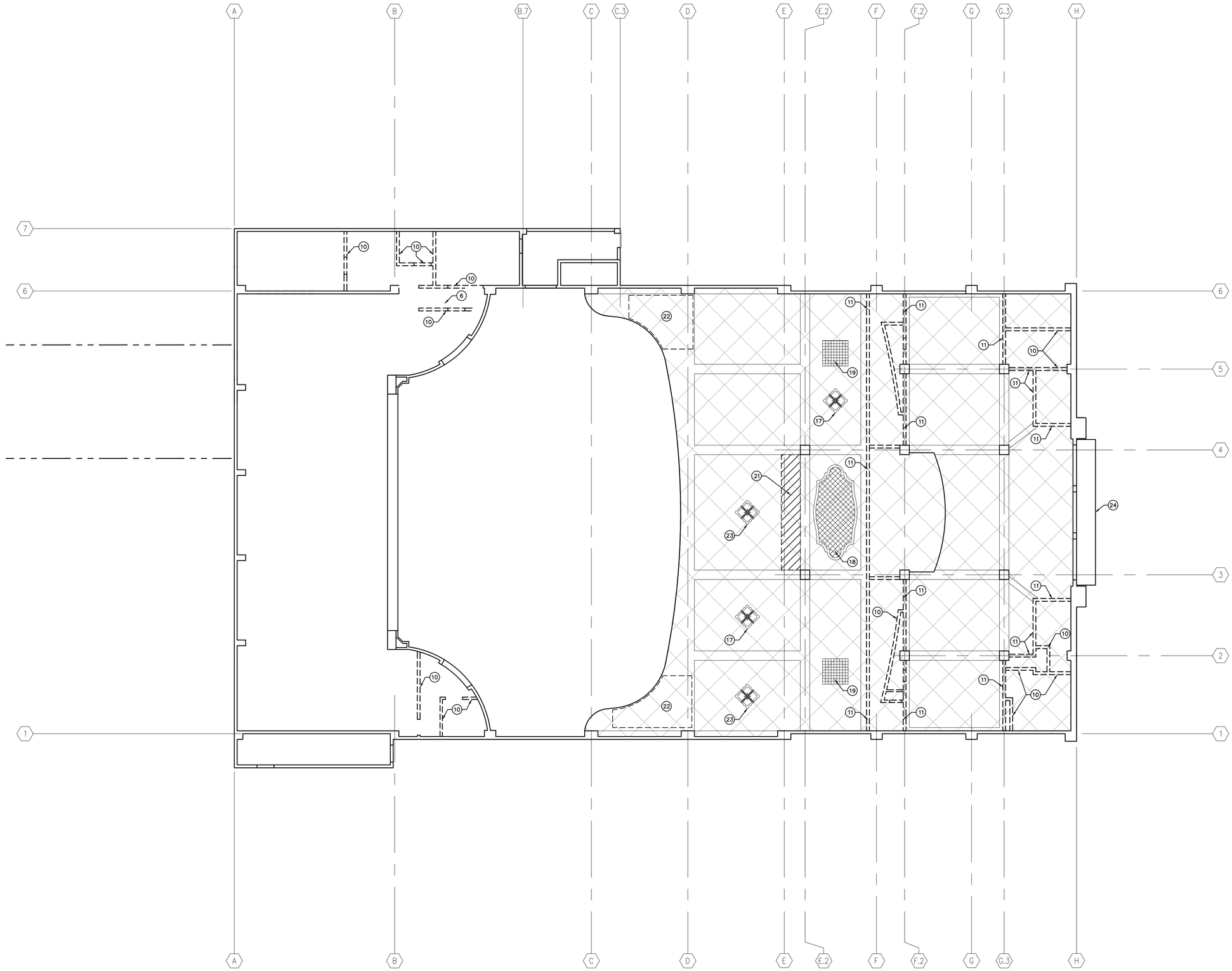

HISTORIC PRESERVATION & DEMOLITION
1st FLOOR REFLECTED CEILING PLAN

PRESERVATION & DEMOLITION NOTES BY SYMBOL

1. COMPLETELY REMOVE EXISTING CONCRETE FLOOR SLAB.
2. COMPLETELY REMOVE EXISTING METAL ROOF DECK & ROOFING, INCLUDING ALL COPING & FLASHING.
3. COMPLETELY REMOVE EXISTING INTEGRAL CONCRETE FLOOR SLAB & BEAMS.
4. COMPLETELY REMOVE EXISTING MECHANICAL FAN & STEEL-FABRICATED VERTICAL SHAFT.
5. EXISTING CANOPY OVER EXISTING ENTRY DOORS TO BE FULLY RESTORED, MADE WATER-TIGHT, STRUCTURALLY SOUND AND READY FOR NEW DOWN LIGHTS.
6. EXISTING STAIRS AND LANDINGS TO BE REMOVED.
7. EXISTING DOOR TO BE REMOVED AND PRESERVED/ STORED ONSITE.
8. EXISTING DOOR TO BE REMOVED.
9. PROPOSED NEW SAWCUT OPENING IN EXISTING WALL TO BE APPROVED BY STRUCTURAL ENGINEER OF RECORD.
10. EXISTING WALL TO BE REMOVED.
11. REMOVE EXISTING WALL UP TO 2" FROM DECORATIVE MOLDING OR CEILING.
12. REMAINDER OF FOUNTAINS TO BE SALVAGED, CRATED, AND STORED ON SITE. CAP ALL UTILITIES BELOW SLAB.
13. COMPLETELY REMOVE EXISTING CONCESSIONS COUNTER. CAP ALL UTILITY LINES BELOW NEW F.F.
14. EXISTING CONCRETE & PLASTER CLAMSHELL FEATURE TO BE REMOVED AND PRESERVED/ STORED ONSITE.
15. EXISTING STAIR RAILING TO BE REMOVED AND PRESERVED/ STORED ONSITE.
16. EXISTING CONCRETE STAIRS AND LANDINGS TO BE COMPLETELY REMOVED. STAIRS AND LANDING ARE TO BE HAND MEASURED AND FULLY DOCUMENTED FOR POSSIBLE FUTURE RECONSTRUCTION PRIOR TO REMOVAL. CONDITIONS OF REMOVAL TO BE VERIFIED WITH STRUCTURAL ENGINEER OF RECORD, HISTORICAL ARCHITECT & LANDLORD.
17. EXISTING DECORATIVE LIGHT FIXTURE TO BE RESTORED IN PLACE.
18. EXISTING DECORATIVE AIR VENT & TRIM, CLEAN & PREPARE FOR PAINTING.
19. EXISTING STEEL GRILLE, CLEAN & PREPARE FOR PAINTING.
20. THE DECORATIVE FEATURES, INCLUDING ORNAMENT AND OPENINGS ON THE NORTH ELEVATION SHALL BE RETAINED AND SHALL BE CLEANED AND MAINTAINED WITH GENTLEST MEANS POSSIBLE AT LESS THAN 400 PSI, TO BE DETERMINED AFTER INSPECTION AND RECOMMENDATION BY A QUALIFIED MASONRY RESTORATION SPECIALIST.
21. PROVIDE 3'-4" WIDE SLOT CUT IN CEILING FOR INSTALLATION OF NEW STEEL BEAM. PATCH OPENING TO MATCH EXISTING CEILING FINISH.
22. INDICATES IRREGULAR SHAPED ARE OF DAMAGED PLASTER, CORNICE, CAPITOL OR TRIM TO BE PATCHED TO MATCH EXISTING HISTORICAL FINISHES, AS STIPULATED PER SHEETS HPD-0.1 & HPD-0.2.
    NOTE THAT THE AREAS INDICATED DO NOT CONSTITUTE ALL OF THE HISTORICAL FINISHES REQUIRED TO BE PATCHED. CHATTEL ARCHITECTURE MUST FIELD-VERIFY THE ULTIMATE EXTENT OF ALL PATCHED FINISHES.
23. EXISTING DECORATIVE LIGHT FIXTURE TO BE REMOVED, RESTORED & RELOCATED. SEE SHEET A-3.1

GENERAL PRESERVATION & DEMOLITION NOTES

1. OPENINGS IN- OR REMOVAL OF- ANY WALLS OR WALLS CONTAINING STRUCTURAL ELEMENTS MUST BE APPROVED BY STRUCTURAL ENGINEER OF RECORD.

2. NO ALTERATION OF EXISTING ARCHITECTURAL OR DECORATIVE ELEMENTS SHALL OCCUR OTHER THAN THOSE SPECIFICALLY DESCRIBED IN THESE DOCUMENTS WITHOUT THE APPROVAL OF THE HISTORICAL ARCHITECT OF RECORD.

3. NO PENETRATIONS THROUGH OR MODIFICATIONS OF EXISTING PLASTER TO BE UNDERTAKEN WITHOUT THE APPROVAL OF THE HISTORICAL ARCHITECT OF RECORD.

4. DETERIORATED HISTORIC FEATURES TO BE REPAIRED. IF BEYOND REPAIR THEY ARE TO BE FULLY DOCUMENTED AND REPLACED TO MATCH ORIGINAL FEATURE.

5. NEW ADDITIONS, EXTERIOR ALTERATIONS, OR RELATED NEW CONSTRUCTION WILL NOT DESTROY HISTORIC MATERIALS, FEATURES, AND SPATIAL RELATIONSHIPS THAT CHARACTERIZE THE PROPERTY. THE NEW WORK WILL BE DIFFERENTIATED FROM THE OLD AND WILL BE COMPATIBLE WITH THE HISTORIC MATERIALS, FEATURES, SIZE, SCALE AND PROPORTION, AND MASSING TO PROTECT THE INTEGRITY OF THE PROPERTY AND ITS ENVIRONMENT.

6. EXTERIOR CONCRETE ELEMENTS THAT HAVE CRACKED, BUT NOT FAILED, TO BE REPAIRED.

7. ALL DIMENSIONS OF, TO OR FROM EXISTING BUILDING ELEMENTS MUST BE VERIFIED IN FIELD.

8. ALL ± HEIGHTS AND DIMENSIONS TO BE VERIFIED IN FIELD.

9. ALL PAINT SELECTIONS AND LOCATIONS TO BE COORDINATED WITH AND APPROVED BY CHATTEL ARCHITECTURE

10. ALL HISTORICAL WALL & CEILING DETAILS AND FINISHES TO BE FULLY ENCAPSULATED PER CONDITIONS OF APPROVAL AND MITIGATION MEASURES REFLECTED ON SHEETS HPD-0.1 & HPD-0.2

11. IN ALL AREAS VISIBLE FROM PROPOSED NEW SALES FLOOR BELOW, EXISTING FINISHES THAT ARE 'GOLD' COLOR SHALL BE RE-PAINTED 'GOLD' TO MATCH; ALL OTHER REMAINING SURFACES SHALL BE PAINTED OFF-WHITE, PER FINISH SCHEDULE ON A-7.2. PRIOR TO ANY RE-PAINTING, ALL HISTORICAL WALL & CEILING DETAILS AND FINISHES TO BE FULLY ENCAPSULATED PER CONDITIONS OF APPROVAL AND MITIGATION MEASURES REFLECTED ON SHEETS HPD-0.1 & HPD-0.2

12. ALL FIRE SPRINKLER PENETRATIONS THROUGH HISTORICAL FINISHES HALL BE LOCATED SO A TO MINIMIZE, TOT HE GREATEST DEGREE POSSIBLE, DAMAGE TO THE IMMEDIATELY SURROUNDING SURFACES. THOSE PENETRATIONS OCCURRING IN THE AREAS TO REMAIN EXPOSED TO THE PUBLIC SHALL BE PATCHED TO MATCH THE APPEARANCE OF THE SURROUNDING FINISH MATERIALS(S). FINAL LOCATION OF ALL HEADS PENETRATING HISTORICAL FINISHES, WHETHER EXPOSED TO THE PUBLIC OR NOT, SHALL BE COORDINATED WITH CHATTEL ARCHITECTURE PRIOR TO MAKING THOSE PENETRATIONS TO THE MAXIMUM EXTENT FEASIBLE, PENETRATIONS WILL BE MADE IN FLAT PLASTER AREAS AVOIDING TRIM.

ROBERT KABLICK Architects And Associates, Inc.
18662 MacArthur Blvd.
Ste.200
Irvine, California 92612
(949) 796-3838
www.rka a.com

LICENSED ARCHITECT
CRAIG JOHNSON
NO. C12434
STATE OF CALIFORNIA

COPYRIGHT 2001 ALL RIGHTS RESERVED. THIS DOCUMENT, AS AN INSTRUMENT OF SERVICE, AND DRAWING IS AN INSTRUMENT OF SERVICE, IS IS THE PROPERTY OF ROBERT KUBICK ARCHITECTS, AND MAY NOT BE USED OR COPIED WITHOUT PERMISSION OR REPRODUCTION HERE OF USED WITHOUT WRITTEN PERMISSION OF THE ARCHITECT.

date:	Mtg:
10/4/10	Bldg. Dept. Submittal
10/15/10	Health Dept. Submittal
1/6/11	Chattel Architecture Submittal
1/27/11	Chattel Architecture Submittal

NOTICE OF ALTERNATE BILLING OR PAYMENT CYCLE: THIS CONTRACT MAY ALSO BE BILLED OR PAYMENT MAY BE REQUIRED ON A MONTHLY BASIS, ESTIMATES IN BILLING CYCLES OTHER THAN THIRTY DAYS MAY BE MADE ON A PRO RATA BASIS. ESTIMATES MAY ALTERNATE ON THE ALTERNATE SCHEDULE AFTER CERTIFICATION AND APPROVAL OF BILLING BY THE OWNER OR HIS DESIGNATED AGENT. ALTERNATE BILLING AND/OR CYCLE DURING THE COURSE OF THE PROJECT IS AVAILABLE FROM THE OWNER AT THE OFFICES OF

OR HIS DESIGNATED AGENT SHALL PROVIDE THIS WRITTEN DESCRIPTION ON REQUEST

DEVELOPER:
CHARLES COMPANY
9034 W. SUNSET BLVD.
WEST HOLLYWOOD
CA 90069
TEL (310) 247-0900
FAX (310) 247-1525

CVS pharmacy
STORE #4524
909 S. ATLANTIC BLVD
LOS ANGELES, CA

design	RKA
drawn	RKA
check	RKA

sheet **HPD** of **-3.1**
job 09151

1/27/2011 3:04:11 PM

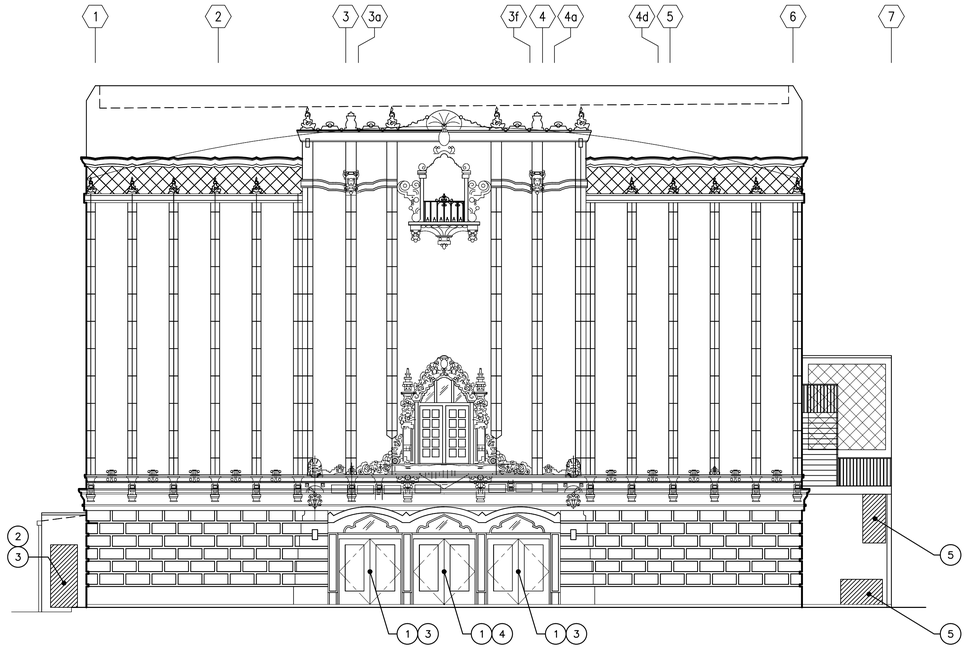

2 HPD-4.1 NORTH ELEVATION

SCALE: 1/8" = 1'-0"

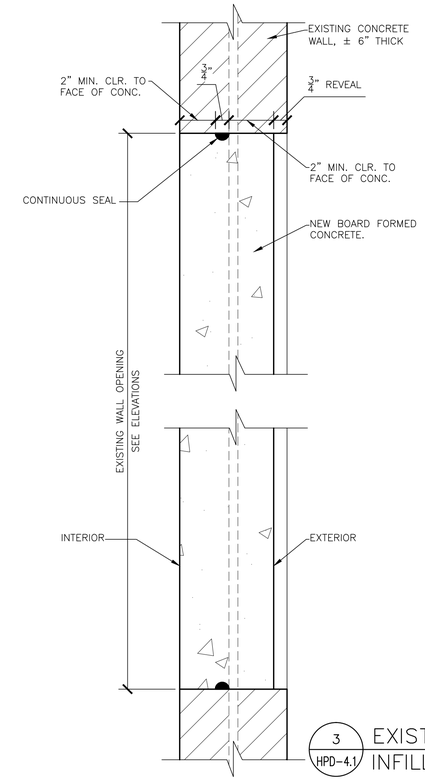

3 HPD-4.1 EXIST' OPENING INFILL

SCALE: 3" = 1'-0"

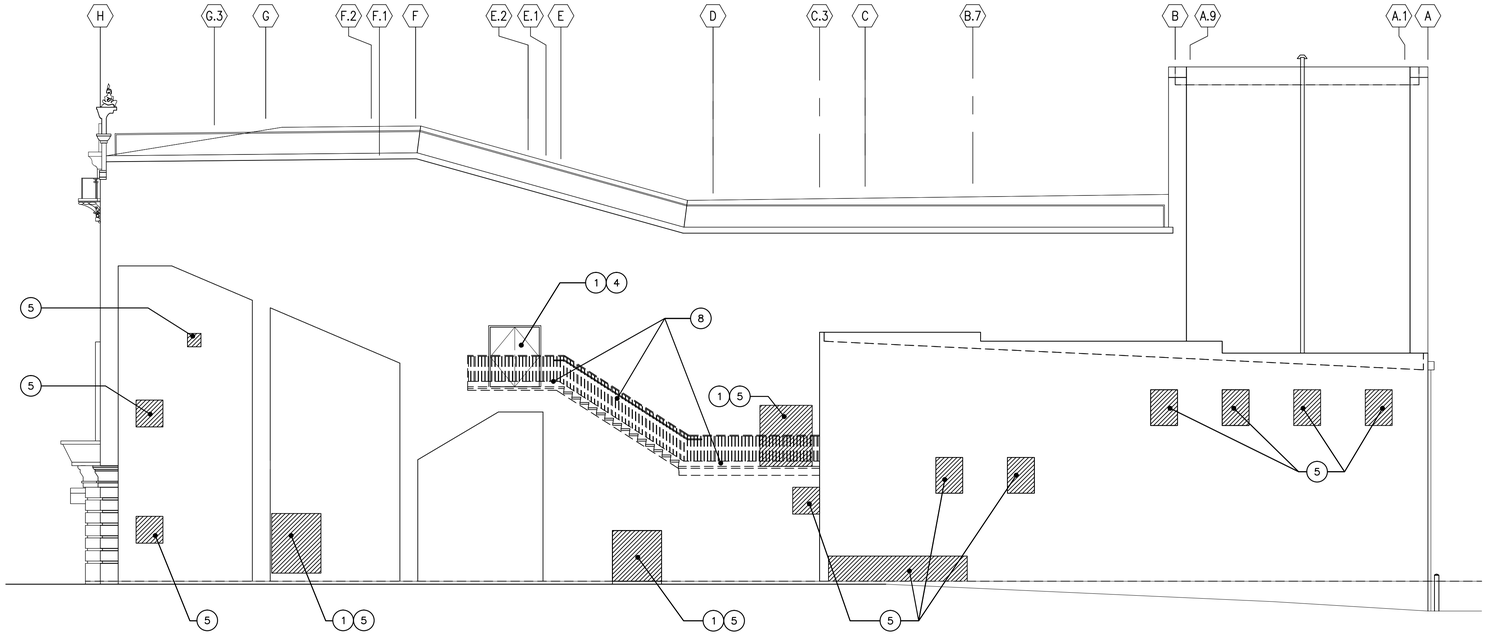

1 HPD-4.1 WEST ELEVATION

SCALE: 1/8" = 1'-0"

ELEVATION KEY NOTES

1. ORIGINAL DOOR TO BE PRESERVED/ STORED ONSITE. (FRONT & SIDE DOUBLE DOORS)
2. ORIGINAL DOOR TO BE REMOVED/ DISPOSED
3. NEW SECURE, TEMPORARY, WALL/BARRIER TO BE INSTALLED. (FOR OPENINGS THAT WILL ULTIMATELY BE UTILIZED, BUT NOT DURING CONTRUCTION.)
4. THESE OPENINGS TEMPORARILY CLOSED. CONFIRM USE OF TEMPORARY HOLLOW METAL ACCESS DOORS WITH OWNER AND COUNTY OF L.A. BLDG. DEPT. CONTRACTOR TO AVOID MAKING ANY NEW PENETRATIONS INTO EXISTING WALL SURFACES WITH THE INSTALLATION OF THESE TEMPORARY DOORS. COORDINATE IN FIELD WITH CHATTEL ARCHITECTURE. (FOR DOORWAYS TO BE USED DURING CONSTRUCTION.)
5. WALL INFILL WITH BOARD FORMED CONCRETE. (PERMANENTLY FILLED OPENING) 3 HPD-4.1 / 4 HPD-4.1
6. FUTURE LOCATION OF RELIEF AIR DAMPER (EXHAUST AIR)
7. FUTURE LOCATION OF OUTSIDE AIR LOUVER (INTAKE AIR)
8. EXISTING CONCRETE STAIRS AND LANDINGS TO BE COMPLETELY REMOVED. STAIRS AND LANDING ARE TO BE HAND MEASURED AND FULLY DOCUMENTED FOR POSSIBLE FUTURE RECONSTRUCTION PRIOR TO REMOVAL. CONDITIONS OF REMOVAL TO BE VERIFIED WITH STRUCTURAL ENGINEER OF RECORD, HISTORICAL ARCHITECT & LANDLORD.

GENERAL NOTES

1. ONLY KEYNOTED ITEMS INDICATE WORK TO BE DONE AS A PART OF THIS PERMIT.
2. ALL HISTORICAL DOOR TRIM, OCCURRING AT OPENINGS TO BE FILLED, SHALL BE PRESERVED.

These plans have been reviewed by Chattel Architecture, Planning & Preservation, Inc., the qualified professional architectural historian identified in the Mitigation Monitoring Program in the Final Environmental Impact Report for Rehabilitation and Adaptive Reuse of Golden Gate Theater. They have been found to be in conformance with the Secretary of the Interior's Standards for the Treatment of Historic Properties, as required under Cultural Resources Mitigation Measures 3.2.1 and 3.2.5.

By: _____ Date: _____

Robert Jay Chattel, AIA, President

18662 MacArthur Blvd.
Ste 200
Irvine, California 92612
(949) 796-3838
www.rkaa.com

ROBERT KABICEK ASSOCIATES
Architects And Associates, Inc.

LICENSED ARCHITECT
CRAIG JOHNSON
NO. C12434
STATE OF CALIFORNIA

COPYRIGHT 2011 ALL RIGHTS RESERVED.
THIS DOCUMENT IS AN INSTRUMENT OF SERVICE. IT IS THE PROPERTY OF ROBERT KABICEK ARCHITECTS, AND MAY NOT BE USED OR REPRODUCED WITHOUT WRITTEN PERMISSION OF THE ARCHITECT.

date:	
10/4/10	Bldg. Dept. Submittal
10/15/10	Health Dept. Submittal
1/6/11	Chattel Architecture Submittal
1/27/11	Chattel Architecture Submittal

NOTICE OF ALTERNATE BILLING OR PAYMENT CYCLE: THIS CONTRACT MAY BE ELIGIBLE TO BILL OR PAY ESTIMATES IN BILLING CYCLES OTHER THAN ESTIMATES IN BILLING CYCLES OTHER THAN THIRTY DAYS MAY BE MADE AS AGREED BY THE PARTIES. PAYMENT ON DONE - ALTERNATE SCHEDULE AFTER CERTIFICATION AND APPROVAL OF BILLING BY OWNER, OR HIS DESIGNATED AGENT, SHALL BE MADE WITHIN 30 DAYS. AND/OR COST OF COMPLIANCE TO THIS PROJECT IS AVAILABLE FROM THE OWNER AT THE OFFICES OF

OR HIS DESIGNATED AGENT SHALL PROVIDE THIS WRITTEN DESCRIPTION ON REQUEST

DEVELOPER:
CHARLES COMPANY
9034 W. SUNSET BLVD.
WEST HOLLYWOOD
CA 90069
TEL (310) 247-0900
FAX (310) 247-1525

CVS pharmacy
STORE #4524
909 S. ATLANTIC BLVD
LOS ANGELES, CA

design RKA
drawn RKA
check RKA

sheet HPD-4.1 of
job 09151

1/27/2011 3:21:46 PM

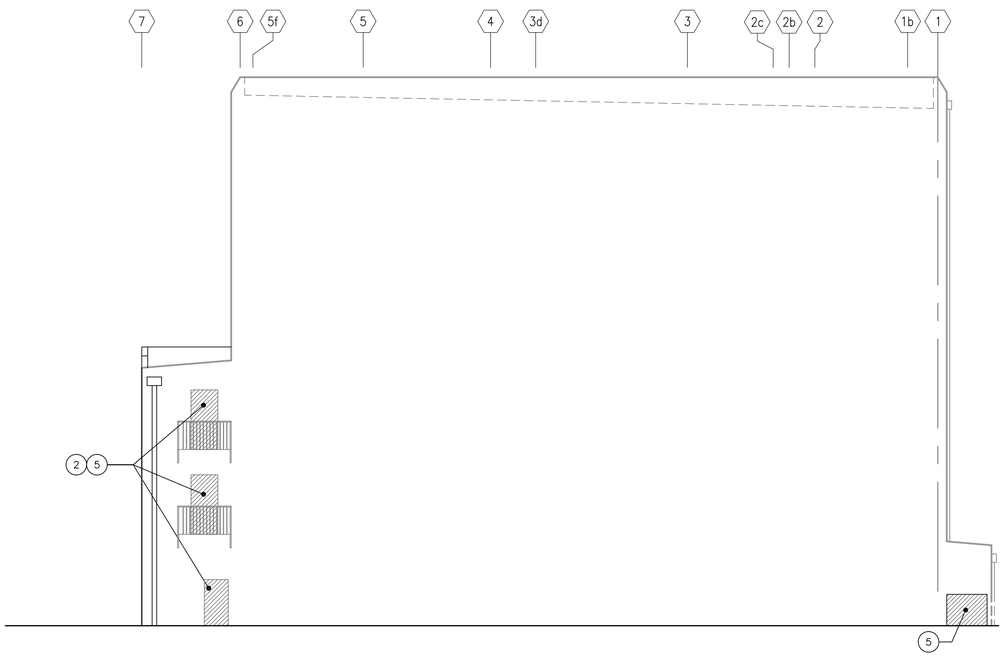

2 HPD-4.2 SOUTH ELEVATION

SCALE: 1/8" = 1'-0"

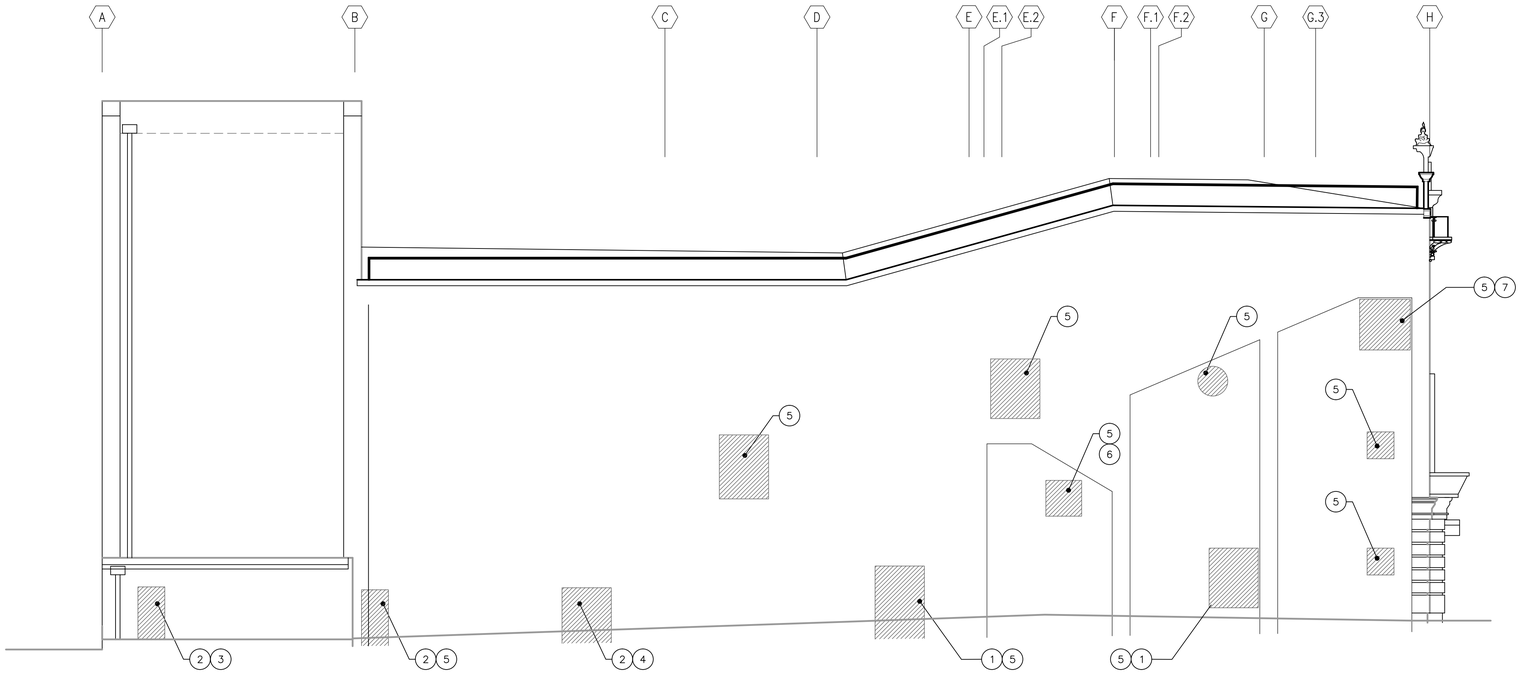

1 HPD-4.2 EAST ELEVATION

SCALE: 1/8" = 1'-0"

ELEVATION KEY NOTES

1. ORIGINAL DOOR TO BE PRESERVED/ STORED ONSITE. (FRONT & SIDE DOUBLE DOORS)
2. ORIGINAL DOOR TO BE REMOVED/ DISPOSED
3. NEW SECURE, TEMPORARY, WALL/BARRIER TO BE INSTALLED. (FOR OPENINGS THAT WILL ULTIMATELY BE UTILIZED, BUT NOT DURING CONTRUCTION.)
4. THESE OPENINGS TEMPORARILY CLOSED. CONFIRM USE OF TEMPORARY HOLLOW METAL ACCESS DOORS WITH OWNER AND COUNTY OF L.A. BLDG. DEPT. CONTRACTOR TO AVOID MAKING ANY NEW PENETRATIONS INTO EXISTING WALL SURFACES WITH THE INSTALLATION OF THESE TEMPORARY DOORS. COORDINATE IN FIELD WITH CHATTEL ARCHITECTURE. (FOR DOORWAYS TO BE USED DURING CONSTRUCTION.)
5. WALL INFILL WITH BOARD FORMED CONCRETE. (PERMANENTLY FILLED OPENING) 3 HPD-4.1 4 HPD-4.1
6. FUTURE LOCATION OF RELIEF AIR DAMPER (EXHAUST AIR)
7. FUTURE LOCATION OF OUTSIDE AIR LOUVER (INTAKE AIR)
8. EXISTING CONCRETE STAIRS AND LANDINGS TO BE COMPLETELY REMOVED. STAIRS AND LANDING ARE TO BE HAND MEASURED AND FULLY DOCUMENTED FOR POSSIBLE FUTURE RECONSTRUCTION PRIOR TO REMOVAL. CONDITIONS OF REMOVAL TO BE VERIFIED WITH STRUCTURAL ENGINEER OF RECORD, HISTORICAL ARCHITECT & LANDLORD.

GENERAL NOTES

1. ONLY KEYNOTED ITEMS INDICATE WORK TO BE DONE AS A PART OF THIS PERMIT.
2. ALL HISTORICAL DOOR TRIM, OCCURRING AT OPENINGS TO BE FILLED, SHALL BE PRESERVED.

These plans have been reviewed by Chattel Architecture, Planning & Preservation, Inc., the qualified professional architectural historian identified in the Mitigation Monitoring Program in the Final Environmental Impact Report for Rehabilitation and Adaptive Reuse of Golden Gate Theater. They have been found to be in conformance with the Secretary of the Interior's Standards for the Treatment of Historic Properties, as required under Cultural Resources Mitigation Measures 3.2.1 and 3.2.5.

By: _____ Date: _____

Robert Jay Chattel, AIA, President

18662 MacArthur Blvd.
Ste.200
Irvine, California 92612
(949) 796-3838
www.rka.com

ROBERT KABICEK Architects And Associates, Inc.

LICENSED ARCHITECT
CRAIG JOHNSON
NO. C12434
STATE OF CALIFORNIA

COPYRIGHT 2011 ALL RIGHTS RESERVED.
ROBERT KABICEK ARCHITECTS, INC.
THIS DRAWING IS AN INSTRUMENT OF SERVICE. IT IS THE PROPERTY OF ROBERT KABICEK ARCHITECTS, INC. AND MAY NOT BE USED WITHOUT PERMISSION OR REPRODUCTION HERE OF USED WITHOUT WRITTEN PERMISSION OF THE ARCHITECT.

date:	
10/4/10	Bldg. Dept. Submittal
10/15/10	Health Dept. Submittal
1/6/11	Chattel Architecture Submittal
1/27/11	Chattel Architecture Submittal

NOTICE OF ALTERNATE BILLING OR PAYMENT CYCLE: THIS CONTRACT MAY ALLOW THE OWNER TO ALTERNATE BILLING OR PAYMENT CYCLE ESTIMATES IN BILLING CYCLES SHORT THAN THIRTY DAYS. THIS CONTRACT MAY ALLOW THE OWNER TO MAKE PAYMENT ON ESTIMATES ONLY AFTER CERTIFICATION AND APPROVAL OF BILLING BY THE OWNER OR HIS DESIGNATED AGENT. ANY OTHER BILLING AND/OR CYCLE APPLICABLE TO THIS PROJECT IS AVAILABLE FROM THE OWNER AT THE OFFICES OF

OR HIS DESIGNATED AGENT SHALL PROVIDE THIS WRITTEN DESCRIPTION ON REQUEST

DEVELOPER:
CHARLES COMPANY
9034 W. SUNSET BLVD.
WEST HOLLYWOOD
CA 90069
TEL (310) 247-0900
FAX (310) 247-1525

cvs pharmacy
STORE #4524
909 S. ATLANTIC BLVD
LOS ANGELES, CA

design RKA
drawn RKA
check RKA

sheet HPD-4.2 of
job 09151

1/28/2011 10:45:16 AM

ALL SAW-CUT OPENING SHALL BE VERIFIED IN THE FIELD WITH CVS REPRESENTATIVE PRIOR TO PERFORMING SAWCUTS.

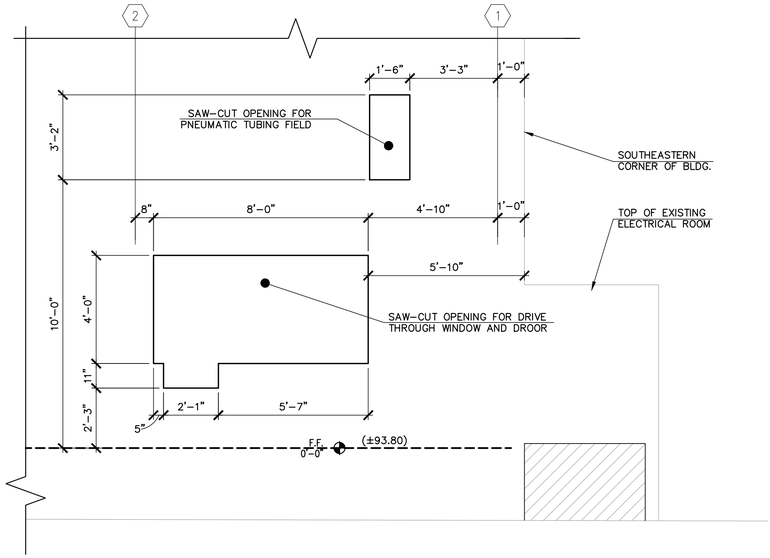

4 HPD-5.1 HISTORICAL PRESERVATION & DEMOLITION DRIVE THRU WINDOW AREA SOUTH ELEVATION

SCALE: 3/8" = 1'-0"

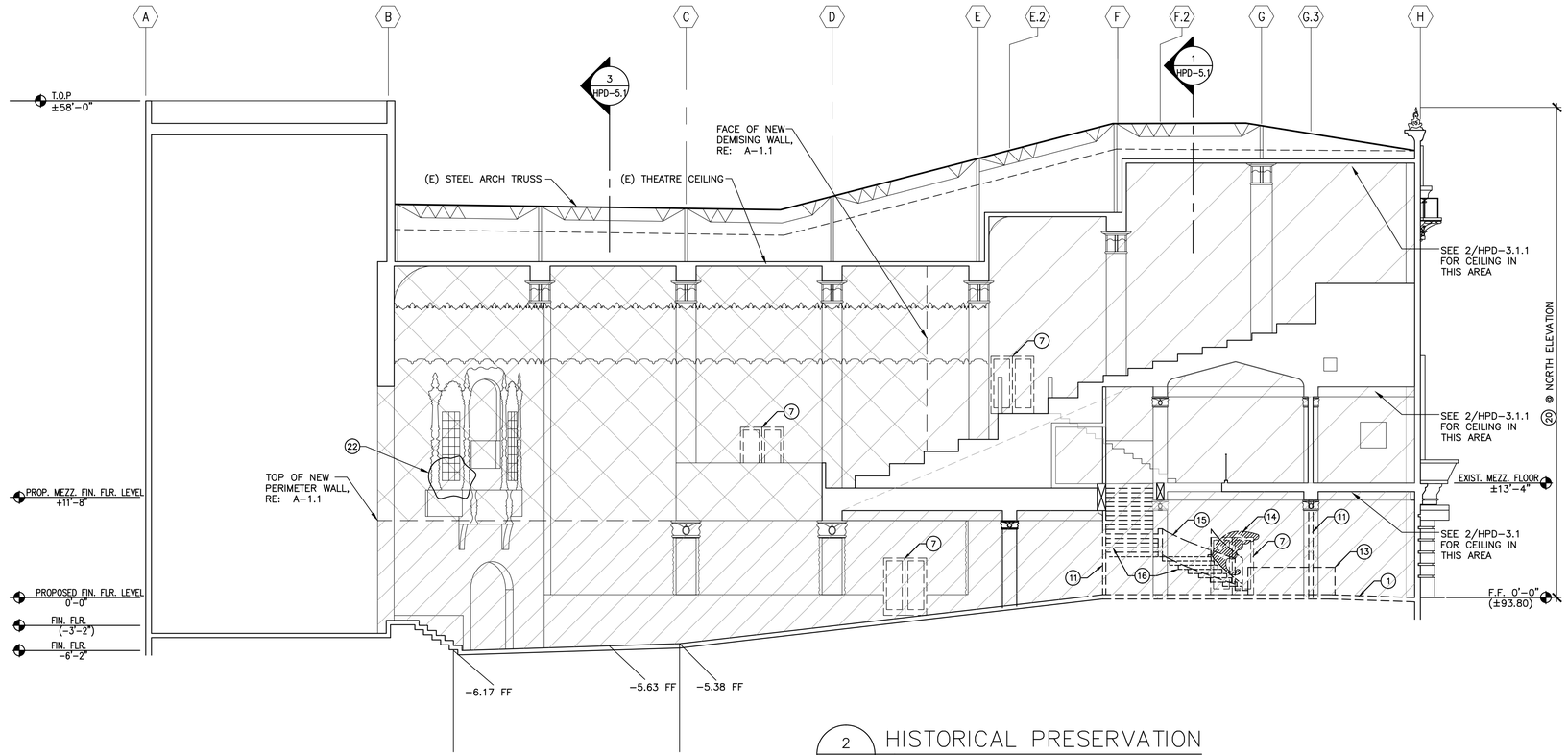

2 HPD-5.1 HISTORICAL PRESERVATION & DEMOLITION SECTION

SCALE: 1/8" = 1'-0"

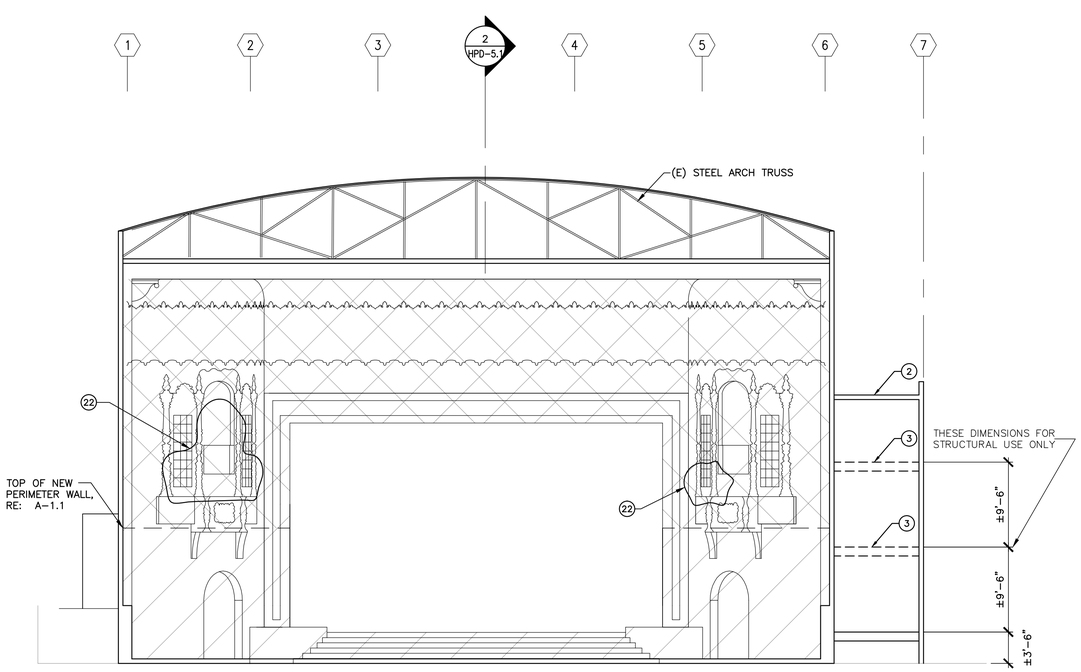

3 HPD-5.1 HISTORICAL PRESERVATION & DEMOLITION SECTION

SCALE: 1/8" = 1'-0"

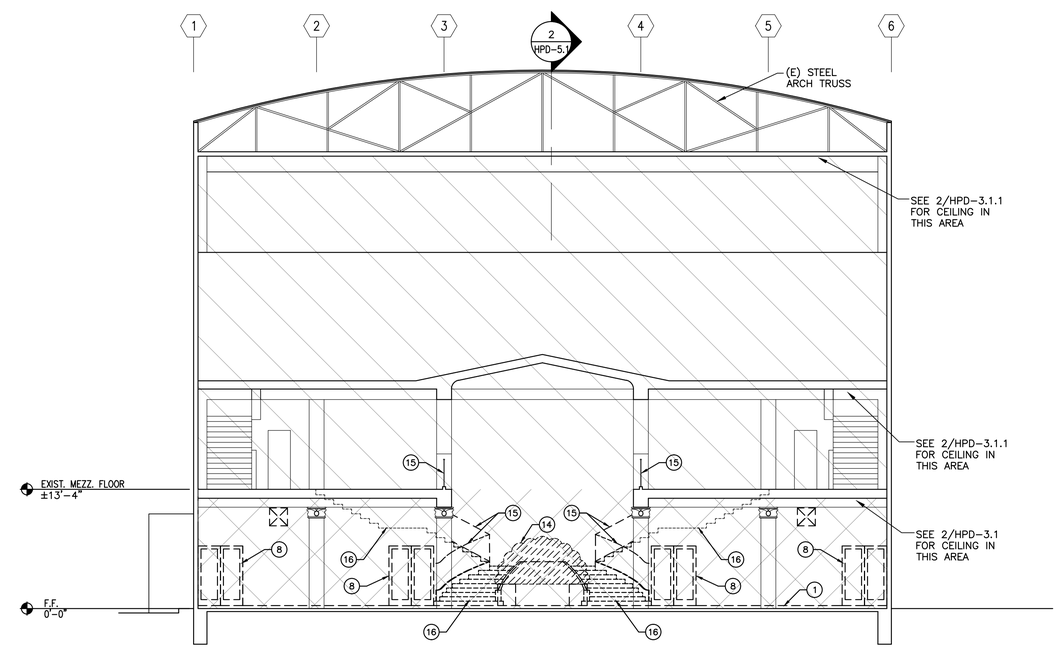

1 HPD-5.1 HISTORICAL PRESERVATION & DEMOLITION SECTION

SCALE: 1/8" = 1'-0"

NOTE: SEE SHEET HPD-3.1 FOR KEYNOTE REFERENCES, GENERAL NOTES, LEGEND AND ALL HISTORICAL WALL FINISHES

1/27/2011 3:22:35 PM

18662 MacArthur Blvd. Ste.200 Irvine, California 92612 (949) 796-3838 www.rka.com

ROBERT KABICEK Architects And Associates, Inc.

LICENSED ARCHITECT CRAIG JOHNSON NO. C12434 STATE OF CALIFORNIA

COPYRIGHT 2011 ALL RIGHTS RESERVED. ROBERT KABICEK ARCHITECTS, INC. THIS DRAWING IS AN INSTRUMENT OF SERVICE, IT IS THE PROPERTY OF ROBERT KABICEK ARCHITECTS, INC. AND MAY NOT BE USED OR REPRODUCED, OR REPRODUCTION HERE OF USED, WITHOUT WRITTEN PERMISSION OF THE ARCHITECT.

date:	
10/4/10	Bldg. Dept. Submittal
10/15/10	Health Dept. Submittal
1/6/11	Chattel Architecture Submittal
1/27/11	Chattel Architecture Submittal

NOTICE OF ALTERNATE BILLING OR PAYMENT CYCLE: THIS CONTRACT MAY RESULT IN MORE THAN REQUIRE THE SUBMISSION OF BILLINGS OR ESTIMATES ON A MONTHLY BASIS. THE OWNER, SURETY, ESTIMATOR OR LENDING ENTITY MAY ALLOW THE OWNER TO MAKE PAYMENT ON SOME ALTERNATIVE SCHEDULE BASED ON PROGRESS OF THE WORK RATHER THAN BILLED AND ESTIMATED. A WRITTEN DESCRIPTION OF THE SIGN OTHER BILLING AND/OR CYCLE APPLICABLE TO THE PROJECT IS AVAILABLE FROM THE OWNER AT THE OFFICES OF

OR HIS DESIGNATED AGENT SHALL PROVIDE THIS WRITTEN DESCRIPTION ON REQUEST.

DEVELOPER:
CHARLES COMPANY
9034 W. SUNSET BLVD.
WEST HOLLYWOOD
CA 90069
TEL (310) 247-0900
FAX (310) 247-1525

cvs pharmacy
STORE #4524
909 S. ATLANTIC BLVD
LOS ANGELES, CA

design	RKA
drawn	RKA
check	RKA

sheet HPD of -5.1

job 09151

DISABLED ACCESS CODE DATA

GROUND AND FLOOR SURFACES

1 . GROUND AND FLOOR SURFACES ALONG ACCESSIBLE ROUTES AND IN ACCESSIBLE ROOMS AND SPACES, INCLUDING FLOORS, WALKS. RAMPS, STAIRS AND CURB RAMPS, SHALL BE STABLE, FIRM AND SLIP RESISTANT. IN BUILDINGS AND FACILITIES, FLOORS OF A GIVEN STORY SHALL BE A COMMON LEVEL THROUGHOUT, OR SHALL BE CONNECTED BY PEDESTRIAN RAMPS, PASSENGER ELEVATORS, OR SPECIAL ACCESS LIFTS. (1124B.1)

2 . CHANGES IN LEVEL: CHANGES IN LEVEL UP TO 1/4" VERTICAL AND WITHOUT EDGE TREATMENT. CHANGES IN LEVEL BETWEEN 1/4" AND 1/2" SHALL BE ACCOMPLISHED BY MEANS OF A RAMP.

SITE ACCESSIBILITY

1 . EXTERIOR ROUTES OF TRAVEL: SITE DEVELOPMENT AND GRADING SHALL BE DESIGNED TO PROVIDE ACCESS TO ALL ENTRANCES AND EXTERIOR GROUND-FLOOR EXITS, AND ACCESS NORMAL PATHS OF TRAVEL, AND WHERE NECESSARY TO PROVIDE ACCESS, SHALL INCORPORATE PEDESTRIAN RAMPS, CURB RAMPS, ETC. MORE THAN ONE BUILDING OR FACILITY IS LOCATED ON SITE, ACCESSIBLE ROUTE OF TRAVEL SHALL BE PROVIDED BETWEEN BUILDINGS AND ACCESSIBLE SITE FACILITIES. THE ACCESSIBLE ROUTE OF TRAVEL SHALL BE PROVIDED BETWEEN BUILDINGS OR FACILITY IS LOCATED ON A SITE, ACCESSIBLE ROUTE OF TRAVEL SHALL BE PROVIDED BETWEEN BUILDINGS AND ACCESSIBLE SITE FACILITIES. THE ACCESSIBLE ROUTE OF TRAVEL SHALL BE THE MOST PRACTICAL DIRECT ROUTE BETWEEN BUILDINGS ENTRANCES, ACCESSIBLE SITE FACILITIES AND THE ACCESSIBLE ENTRANCE TO THE SITE.

2 . WIDTH OF CURB RAMPS: CURB RAMPS SHALL BE A MINIMUM OF 4 FEET IN WIDTH AND SHALL LIE, GENERALLY, IN A SINGLE SLOPED PLANE, WITH A MINIMUM OF SURFACE WARPING AND CROSS SLOPE.

3 . SLOPE OF CURB RAMPS: THE SLOPE OF CURB RAMPS SHALL NOT EXCEED 1 VERTICAL TO 12 HORIZONTAL. TRANSITIONS FROM RAMPS TO WALKS, GUTTERS, OR STREETS SHALL BE FLUSH AND FREE OF ABRUPT CHANGES, EXCEPT THAT CURB RAMPS SHALL COMPLY WITH SUBPARAGRAPH 5 BELOW. MAXIMUM SLOPES OF ADJOINING GUTTERS, ROAD SURFACE ACCESSIBLE ROUTE SHALL NOT EXCEED 1:20 WITHIN 4 FEET OF THE TOP AND BOTTOM OF THE CURB RAMP. THE SLOPE OF THE FANNED OR FLARED SIDES OF CURB RAMPS SHALL NOT EXCEED 1 VERTICAL TO 10 HORIZONTAL.

4 . LEVEL LANDING: A LEVEL LANDING 4 FEET DEEP SHALL BE PROVIDED AT THE UPPER END OF EACH CURB RAMP OVER ITS FULL WIDTH TO PERMIT SAFE EGRESS FROM THE RAMP SURFACE, OR THE SLOPE OF THE FANNED OR FLARED SIDES OF THE CURB RAMP SHALL NOT EXCEED 1 VERTICAL TO 12 HORIZONTAL.

5 . TRANSITIONS: TRANSITIONS FROM RAMP(S) TO WALKS, GUTTERS OR STREETS ARE FLUSH AND FREE OF ABRUPT CHANGES.

6 . FINISH: THE SURFACE OF EACH CURB RAMP AND ITS FLARED SIDES SHALL BE STABLE, FIRM AND SLIP RESISTANT AND SHALL BE OF CONTRASTING FINISH FROM THAT OF THE ADJACENT SIDEWALK.

7 . BORDER: ALL CURB RAMPS SHALL HAVE A GROOVED BORDER 12 INCHES WIDE AT THE LEVEL SURFACE OF THE SIDEWALK ALONG THE TOP AND EACH SIDE APPROXIMATELY 3/4" ON CENTER X 1/4" DEEP. ALL CURB RAMPS CONSTRUCTED BETWEEN THE FACE OF THE CURB AND THE STREET SHALL HAVE A GROOVED BORDER AT THE LEVEL SURFACE OF THE SIDEWALK.

8 . DETECTABLE WARNINGS: A CURB RAMP SHALL HAVE A DETECTABLE WARNING THAT EXTENDS THE FULL WIDTH AND DEPTH OF THE CURB RAMP INSIDE THE GROOVED BORDER WHEN THE RAMP SLOPE IS LESS THAN 1 VERTICAL TO 15 HORIZONTAL. THE DETECTABLE WARNING SHALL CONTRAST VISUALLY WITH ADJOINING SURFACES, EITHER LIGHT-ON-DARK OR DARK-ON-LIGHT. THE MATERIAL USED TO PROVIDE CONTRAST SHALL BE AN INTEGRAL PART OF THE WALKING SURFACE.

9 . OBSTRUCTION: CURB RAMPS SHALL BE LOCATED OR PROTECTED TO PREVENT THEIR OBSTRUCTION BY PARKED CARS.

10. DIAGONAL CURB RAMPS: IF DIAGONAL (OR CORNER-TYPE) CURB RAMPS HAVE RETURNED CURBS OR OTHER WELL-DEFINED EDGES, SUCH EDGES SHALL BE PARALLELED TO THE DIRECTION OF PEDESTRIAN FLOW. THE BOTTOM OF DIAGONAL CURB RAMPS SHALL HAVE 48" MINIMUM CLEAR SPACE. IF DIAGONAL CURT RAMPS ARE PROVIDED AT MARKED CROSSINGS, THE RAMPS ARE PROVIDED AT MARKED CROSSINGS, THE 48" CLEAR SPACE SHALL BE WITHIN THE MARKINGS. IF DIAGONAL CURB RAMPS HAVE FLARED SIDES, THEY SHALL ALSO HAVE AT LEAST A 24" LONG SEGMENT OF STRAIGHT CURB LOCATED ON EACH SIDE OF THE CURB RAMP AND WITHIN THE MARKED CROSSING.

11. PEDESTRIAN GRADE SEPARATIONS (OVERPASSES AND UNDERPASSES): PEDESTRIAN RAMPS ON PEDESTRIAN GRADE SEPARATIONS SHALL COMPLY WITH THE REQUIREMENTS FOR RAMPS. CROSS SLOPES OF WALKING SURFACES SHALL BE THE MINIMUM POSSIBLE AND SHALL NOT EXCEED 1/4" PER FOOT (2.083 PERCENT GRADIENT). THE SLOPE OF ANY APPRECIABLY WARPED WALKING SURFACE SHALL NOT EXCEED 1 VERTICAL IN 12 HORIZONTAL IN ANY DIRECTION. WHERE PEDESTRIAN GRADE SEPARATIONS CROSS STREETS OR OTHER VEHICULAR TRAFFIC WAYS, AND WHERE A STREET LEVEL CROSSING CAN REASONABLY AND SHALL BE PROVIDED CONFORMING CURB RAMPS AND A USABLE PATHWAY.

EXCEPTIONS: (1) WHEN THE GRADE DIFFERENTIAL OF THE WALKING SURFACE OF A PEDESTRIAN GRADE SEPARATION EXCEEDS 14'-0" DUE TO REQUIRED HEIGHT CLEARANCE AND GRADE CONDITIONS, AND THE ENFORCING RESTRICTIONS, TOPOGRAPHY OR NATURAL BARRIERS, WHEELCHAIR ACCESSIBILITY OR EQUIVALENT FACILITATION WOULD CREATE AN UNREASONABLE HARDSHIP, SUCH ACCESSIBILITY NEED NOT BE PROVIDED. HOWEVER, THE REQUIREMENTS IN THESE REGULATIONS RELATING TO OTHER TYPES OF MOBILITY SHALL BE COMPLIED WITH.

12. ACCESSIBLE PARKING REQUIRED: EACH LOT OR PARKING STRUCTURE WHERE PARKING IS PROVIDED FOR THE PUBLIC AS CLIENTS, GUESTS OR EMPLOYEES SHALL PROVIDE ACCESSIBLE PARKING. ACCESSIBLE PARKING SPACES SERVING A PARTICULAR BUILDING SHALL BE LOCATED ON THE SHORTEST ACCESSIBLE ROUTE OF TRAVEL FROM ADJACENT PARKING TO AN ACCESSIBLE ENTRANCE. IN PARKING FACILITIES THAT DO NOT SERVE A PARTICULAR BUILDING, ACCESSIBLE PARKING SHALL BE LOCATED ON THE SHORTEST ACCESSIBLE ROUTE OF TRAVEL TO AN ACCESSIBLE PEDESTRIAN ENTRANCES WITH OF THE PARKING FACILITY. IN BUILDINGS WITH MULTIPLE ACCESSIBLE ENTRANCES WITH ADJACENT PARKING, ACCESSIBLE PARKING SPACES SHALL BE DISPERSED AND LOCATED CLOSEST TO THE ACCESSIBLE ENTRANCES. TABLE NO. 11B-6 ESTABLISHES THE NUMBER OF ACCESSIBLE PARKING SPACES REQUIRED.

13. PARKING SPACE SIZE: ACCESSIBLE PARKING SPACES SHALL BE LOCATED AS NEAR AS PRACTICAL TO A PRIMARY ENTRANCE AND SHALL BE SIZED AS FOLLOWS:

1. WHERE SINGLE SPACES ARE PROVIDED, THEY SHALL BE 14'-0" WIDE AND OUTLINED TO PROVIDE A 9'-0" PARKING AREA AND A 5'-0" LOADING AND UNLOADING ACCESS AISLE ON THE PASSENGER SIDE OF THE VEHICLE. WHEN MORE THAN ONE SPACE IS PROVIDED IN LIEU OF PROVIDING A 14'-0" WIDE SPACE FOR EACH PARKING SPACE, TWO SPACES CAN BE PROVIDED WITHIN A 23'-0" AREA LINED TO PROVIDE A 9'-0" PARKING AREA ON EACH SIDE OF A 5'-0" LOADING AND UNLOADING ACCESS AISLE IN THE CENTER. THE MAXIMUM LENGTH OF EACH PARKING SPACE SHALL BE 18'-0".

2. ARRANGEMENT OF PARKING SPACE: IN EACH PARKING AREA, A BUMPER OR CURB SHALL BE PROVIDED AND LOCATED TO PREVENT ENCROACHMENT OF CARS OVER THE REQUIRED WIDTH OF WALKWAYS. ALSO, THE SPACE SHALL BE LOCATED SO THAT PERSONS WITH DISABILITIES ARE NOT COMPELLED TO PEDESTRIAN WAYS WHICH ARE INACCESSIBLE TO PERSONS WITH DISABILITIES, SHALL BE PROVIDED FROM EACH SUCH PARKING SPACE TO RELATED FACILITIES, INCLUDING CURB CUTS OR RAMPS AS NEEDED. RAMPS SHALL NOT ENCROACH INTO ANY PARKING SPACE.

EXCEPTIONS: RAMPS LOCATED AT THE FRONT OF ACCESSIBLE PARKING SPACES MAY ENCROACH INTO THE LENGTH IF SUCH ENCROACHMENT DOES NOT LIMIT THE CAPABILITY OF A PERSON WITH A DISABILITY TO LEAVE OR ENTER A VEHICLE, THUS PROVIDING EQUIVALENT FACILITATION.

14. AT EVERY PRIMARY PUBLIC ENTRANCE, AND AT EVERY MAJOR FUNCTION AREA ALONG, OR LEADING TO, AN ACCESSIBLE ROUTE OF TRAVEL, THERE IS TO BE A SIGN DISPLAYING THE INTERNATIONAL SYMBOL OF ACCESSIBILITY. SIGNS ARE REQUIRED TO INDICATE THE DIRECTION TO ACCESSIBLE BUILDING ENTRANCES AND FACILITIES, PER SECTION 1117B.5.8.1.2 AND 1127B.3.

THERE SHALL BE A LEVEL FLOOR OR LANDING ON EACH SIDE OF ALL DOORS. THE FLOOR OR LANDING SHALL BE LESS THAN ONE-HALF INCH LOWER THAN THE DOORWAY THRESHOLD, PER SECTION 1133.B.2.4 & 1133.B.2.4.1
ALL HAND-ACTIVATED DOOR OPENING HARDWARE SHALL MEET THE FOLLOWING REQUIREMENTS, PER SECTION 1133B.2.5.2:
A) SHALL BE CENTERED MORE THAN THIRTY INCHES, BUT LESS THAN FORTY-FOUR INCHES ABOVE FINISH FLOOR.
B) LATCHING, OR LOCKING, DOORS IN A PATH OF TRAVEL ARE OPERATED WITH A SINGLE EFFORT BY:
i) LEVER TYPE HARDWARE.
ii) PANIC BARS.
iii) PUSH-PULL ACTIVATING BARS.
iv) OR OTHER HARDWARE DESIGNED TO PROVIDE PASSAGE WITHOUT THE REQUIREMENT TO GRASP THE HARDWARE. LOCKED EXIT DOORS SHALL OPERATE AS ABOVE IN THE EGRESS DIRECTION.
THE MAXIMUM EFFORT TO OPERATE DOORS, APPLIED AT RIGHT ANGLES SHALL BE HINGED DOORS OR AT CENTER PLANE AT SLIDING DOORS, PER SECTION 1133B.2.5, SHALL BE:
A) LESS THAN OR EQUAL TO 5.0 POUNDS AT EXTERIOR DOORS.
B) LESS THAN OR EQUAL TO 5.0 POUNDS FOR INTERIOR DOORS.
C) LESS THAN OR EQUAL TO 15.0 POUNDS AT FIRE DOORS.
COMPENSATING DEVICES OR AUTOMATIC DOOR OPERATORS MAY BE UTILIZED TO MEET THE ABOVE STANDARDS. (per 1133B.2.3.2)
THERE SHALL BE A LEVEL AREA AT EXTERIOR DOORS MEASURED AT RIGHT ANGLES TO THE PLANE OF THE DOOR IN THE CLOSED POSITION PER 1133B.2.4, FIG 11B-26A & B WHICH SHALL BE:
A) GREATER THAN OR EQUAL TO 60" IN THE DIRECTION OF DOOR SWINGS.
B) GREATER THAN OR EQUAL TO 48" IN THE DIRECTION OPPOSITE THE DOOR SWING (44" IF DOORS DO NOT HAVE LATCHES OR CLOSURES).

15. SURFACE SLOPES OF ACCESSIBLE PARKING SPACES SHALL BE THE MINIMUM POSSIBLE AND SHALL NOT EXCEED 1 UNIT VERTICAL TO 50 UNITS HORIZONTAL IN ANY DIRECTION. (1129B.3.4)

16. THE WIDTH OF THE LEVEL AREA ON THE SIDE TO WHICH THE DOOR SWINGS SHALL EXTEND 24" PAST THE STRIKE EDGE OF THE DOOR FOR EXTERIOR DOORS AND 18" PAST THE STRIKE EDGE FOR INTERIOR DOORS. (1133B.2.4.3, FIG 11B-26A(a))

17. PROVIDE CLEAR SPACE OF 12" PAST STRIKE EDGE OF THE DOOR ON THE OPPOSITE SIDE TO WHICH TO DOOR SWINGS IF THE DOOR IS EQUIPPED WITH BOTH A LATCH AND A CLOSER ON THE PUSH SIDE OF THE DOOR. (FIG 11B-26A(a))

18. THE BOTTOM 10" OF ALL DOORS EXCEPT AUTOMATIC AND SLIDING SHALL HAVE A SMOOTH, UNINTERRUPTED SURFACE TO ALLOW THE DOOR TO BE OPENED BY A WHEELCHAIR FOOTREST WITHOUT CREATING A TRAP OF HAZARDOUS CONDITION. WHERE NARROW FRAME DOORS ARE USED, A 10" HIGH SMOOTH PANEL SHALL BE INSTALLED ON THE PUSH SIDE OF THE DOOR, WHICH WILL ALLOW THE DOOR TO BE OPENED BY A WHEELCHAIR FOOTREST WITHOUT CREATING A TRAP OR HAZARDOUS CONDITION. (1133B.2.6, FIG 11B-29)

19. ALL ENTRANCES AND ALL EXTERIOR GROUND FLOOR EXIT DOORS TO BUILDINGS AND FACILITIES SHALL BE MADE ACCESSIBLE TO PERSONS WITH DISABILITIES. (1114B.1.3 & 1133B.1.1.1.1)

20. DURING PERIODS OF PARTIAL OR RESTRICTED USE OF A BUILDING OR FACILITY, THE ENTRANCES USED FOR PRIMARY ACCESS SHALL BE ACCESSIBLE TO AND USABLE BY PERSONS WITH DISABILITIES. (1133B.1.1.1.2)

21. ALL GATES, INCLUDING TICKET GATES, SHALL MEET ALL APPLICABLE ACCESSIBILITY SPECIFICATIONS OF DOORS. (1133B.1.1.1.4)

22. EXIT DOORS SHALL BE OPERABLE FROM THE INSIDE WITHOUT THE USE OF A KEY, TOOL, OR ANY SPECIAL KNOWLEDGE OR EFFORT. (1008.1.8)

CONTROLS & OPERATING MECHANISMS

1 . CONTROLS AND OPERATING MECHANISMS REQUIRED TO BE ACCESSIBLE BY SECTION 101.17.11 SHALL COMPLY WITH THE REQUIREMENTS OF SECTION 1117B.6. (1117B.6.1)

2 . CLEAR FLOOR SPACE COMPLYING WITH SECTION 1118B.4 THAT ALLOWS A FORWARD OR PARALLEL APPROACH BY A PERSON USING A WHEELCHAIR SHALL BE PROVIDED AT CONTROLS, DISPENSERS, RECEPTACLES AND OTHER OPERABLE EQUIPMENT. (1117B.6.2, 118B.4)

3 . THE HIGHEST AND LOWEST OPERABLE PART OF ALL CONTROLS, DISPENSERS, RECEPTACLES, AND OTHER OPERABLE EQUIPMENT SHALL BE PLACED WITHIN 48" OF THE FLOOR BUT NOT LOWER THAN 15" IF FORWARD APPROACHED AND WITHIN 54" BUT NOT LOWER THAN 9" IF SIDE APPROACHED. ELECTRICAL AND COMMUNICATION SYSTEM RECEPTACLES ON WALLS SHALL BE MOUNTED NO LESS THAN 15" ABOVE THE FLOOR. (1117B.6.3, 118B.5, 118B.6)

4 . CONTROLS AND OPERATING MECHANISMS SHALL BE OPERABLE WITH ONE HAND AND SHALL NOT REQUIRE TIGHT GRASPING, PINCHING OR TWISTING OF THE WRIST. THE FORCE REQUIRED TO ACTIVATE CONTROLS SHALL BE NO GREATER THAN 5 POUNDS OF FORCE. (1117B.6.4)

5 . FAUCET CONTROLS AND OPERATING MECHANISMS FOR KITCHEN SINKS SHALL BE OPERABLE WITH ONE HAND AND SHALL NOT REQUIRE GRASPING, PINCHING, OR TWISTING OF THE WRIST. THE FORCE REQUIRED TO ACTIVATE FAUCET CONTROLS AND OPERATING MECHANISMS FOR KITCHEN SINKS SHALL BE NO GREATER THAN 5 PLF. LEVER-OPERATED, PUSH-TYPE, AND ELECTRONICALLY CONTROLLED MECHANISMS ARE EXAMPLES OF ACCEPTABLE DESIGNS. SELF-CLOSING VALVES ARE ALLOWED IF THE FAUCET REMAINS OPEN FOR AT LEAST 10 SECONDS. (115B.4.7)

TACTILE EXIT SIGN NOTES

TACTILE EXIT SIGNAGE SHALL BE IN COMPLIANCE WITH CBC SEC. 1117.B.5.1-1 & 1011.3

EACH EXIT DOOR FROM AN INTERIOR ROOM OR AREA TO A CORRIDOR OR HALLWAY THAT IS REQUIRED TO HAVE A VISUAL EXIT SIGN, SHALL BE IDENTIFIED BY THE TACTILE EXIT SIGN WITH THE WORDS "EXIT ROUTE". CBC SEC. 1011.3 (4)

EACH EXTERIOR EXIT DOOR SHALL BE IDENTIFIED BY THE TACTILE EXIT SIGN WITH THE WORDS "EXIT". CBC SEC. 1011.3 (1)

THE MOUNTING HEIGHT FOR SUCH SIGNAGE SHALL BE 60" FROM FINISH FLOOR LEVEL TO THE CENTER OF THE SIGN. CBC SEC. 1117B.5.7

BUILDING CODE

SECTION 1006: MEANS OF EGRESS ILLUMINATION
1006.1 ILLUMINATION REQUIRED. THE MEANS OF EGRESS, INCLUDING THE EXIT DISCHARGE, SHALL BE ILLUMINATED AT ALL TIMES THE BUILDING SPACE SERVED BY THE MEANS OF EGRESS IS OCCUPIED.
EXCEPTIONS:
1. OCCUPANCIES IN GROUP U.
2. AISLE ACCESS WAYS IN GROUP A.
3. DWELLING UNITS AND SLEEPING UNITS IN GROUPS R-1, R-2 AND R-3.
4. SLEEPING UNITS OF GROUP I OCCUPANCIES AND GROUP R-4.

1006.2 ILLUMINATION LEVEL. THE MEANS OF EGRESS ILLUMINATION LEVEL SHALL NOT BE LESS THAN 1 FOOT-CANDLE (11 LUX) AT THE WALKING SURFACE LEVEL.

EXCEPTION: FOR AUDITORIUMS, THEATERS, CONCERT OR OPERA HALLS AND SIMILAR ASSEMBLY OCCUPANCIES, THE ILLUMINATION AT THE WALKING SURFACE IS PERMITTED TO BE REDUCED DURING PERFORMANCES TO NOT LESS THAN 0.2 FOOT-CANDLE (2.15 LUX), PROVIDED THAT THE REQUIRED ILLUMINATION IS AUTOMATICALLY RESTORED UPON ACTIVATION OF A PREMISES' FIRE ALARM SYSTEM WHERE SUCH SYSTEM IS PROVIDED.

1006.3 ILLUMINATION EMERGENCY POWER. THE POWER SUPPLY FOR MEANS OF EGRESS ILLUMINATION SHALL NORMALLY BE PROVIDED BY THE PREMISES' ELECTRICAL SUPPLY.
IN THE EVENT OF POWER SUPPLY FAILURE, AN EMERGENCY ELECTRICAL SYSTEM SHALL AUTOMATICALLY ILLUMINATE THE FOLLOWING AREAS:
1. AISLES AND UNENCLOSED EGRESS STAIRWAYS IN ROOMS AND SPACES THAT REQUIRE TWO OR MORE MEANS OF EGRESS.
2. CORRIDORS, EXIT ENCLOSURES AND EXIT PASSAGEWAYS IN BUILDINGS REQUIRED TO HAVE TWO OR MORE EXITS.
3. EXTERIOR EGRESS COMPONENTS AT OTHER THAN THE LEVEL OF EXIT DISCHARGE IS ACCOMPLISHED FOR BUILDINGS REQUIRED TO HAVE TWO OR MORE EXITS.
4. INTERIOR EXIT DISCHARGE ELEMENTS, AS PERMITTED IN SECTION 1024.1, IN BUILDINGS REQUIRED TO HAVE TWO OR MORE EXITS.

THE EMERGENCY POWER SYSTEM SHALL PROVIDE POWER FOR A DURATION OF NOT LESS THAN 90 MINUTES AND SHALL CONSIST OF STORAGE BATTERIES, UNIT EQUIPMENT OR AN ON-SITE GENERATOR. THE INSTALLATION OF THE EMERGENCY POWER SYSTEM SHALL BE IN ACCORDANCE WITH SECTION 2702.

1006.4 PERFORMANCE OF SYSTEM.
EMERGENCY LIGHTING FACILITIES SHALL BE ARRANGED TO PROVIDE INITIAL ILLUMINATION THAT IS AT LEAST AN AVERAGE OF 1 FOOT-CANDLE (11 LUX) AND A MINIMUM AT ANY POINT OF 0.1 FOOT-CANDLE (1 LUX) MEASURED ALONG THE PATH OF EGRESS AT FLOOR LEVEL. ILLUMINATION LEVELS SHALL BE PERMITTED TO DECLINE TO 0.6 FOOT-CANDLE (6 LUX) AVERAGE AND A MINIMUM AT ANY POINT OF 0.06 FOOT-CANDLE (0.6 LUX) AT THE END OF THE EMERGENCY LIGHTING TIME DURATION. A MAXIMUM-TO-MINIMUM ILLUMINATION UNIFORMITY RATIO OF 40 TO 1 SHALL NOT BE EXCEEDED.

1/27/2011 3:23:16 PM

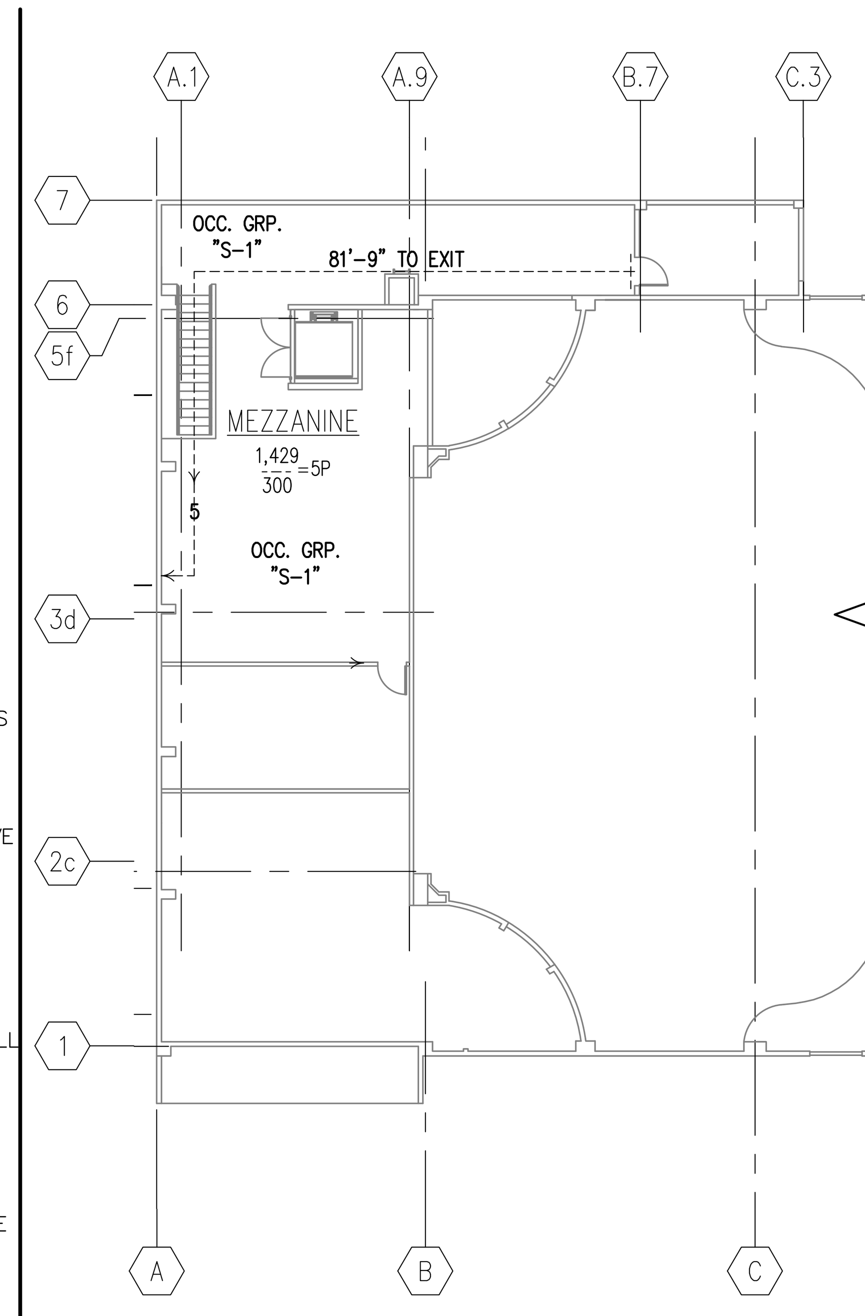

2 / A-0.1 MEZZANINE EXIT PLAN
SCALE: 1/16" = 1'-0"

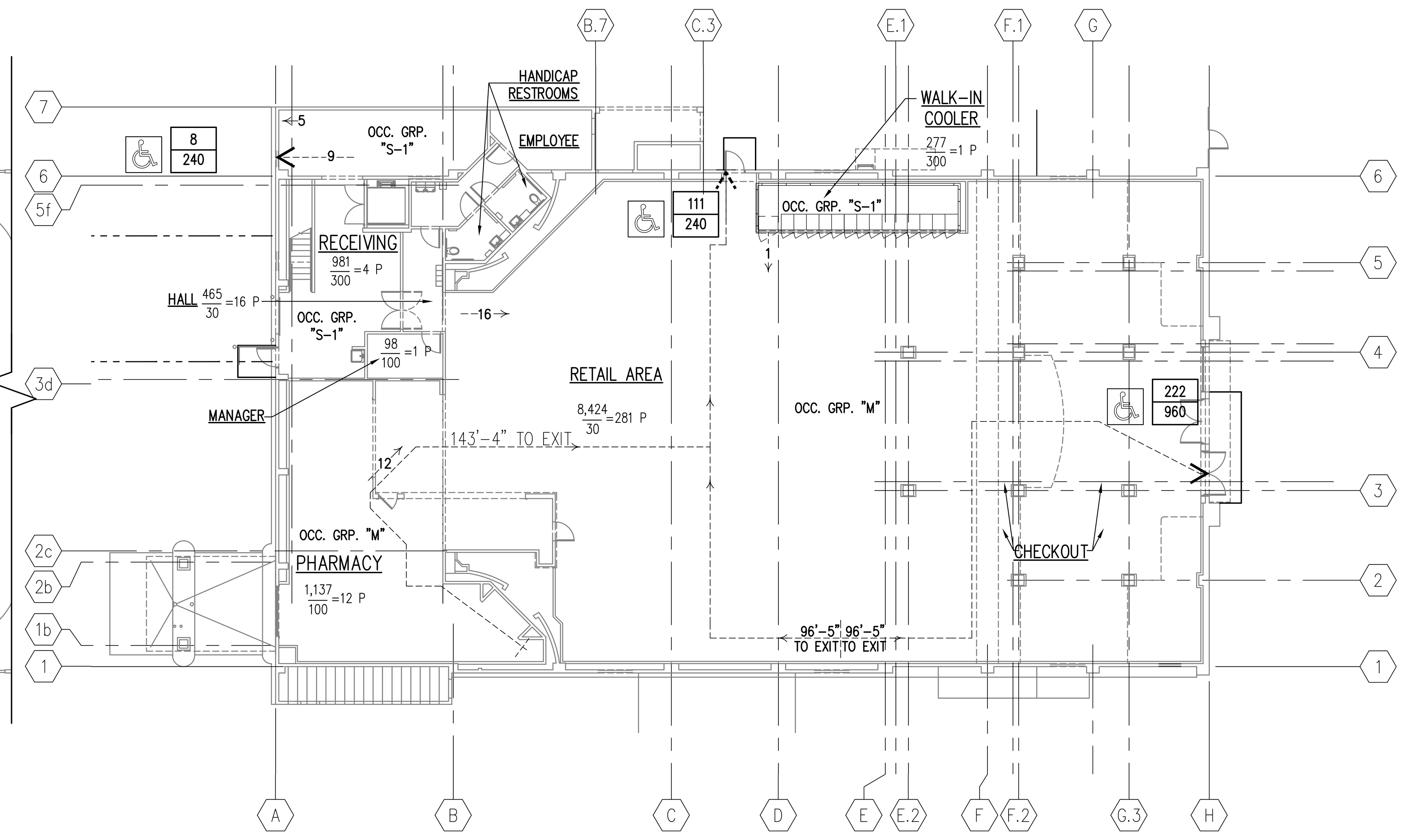

1 / A-0.1 FLOOR EXIT PLAN
SCALE: 1/16" = 1'-0"

SYMBOL LEGEND

(accessibility symbol)	ACCESSIBLE AREA OR EXIT
875 / 20 =43P — AREA — S.F./OCCUPANT	ROOM OCCUPANCY LOAD
43 / 240	EXIT CAPACITY — ACTUAL — ALLOWABLE
--- 15 ------>	DIRECTION OF TRAVEL WITH ACCUMULATED OCCUPANCY LOAD
--- 250' -->	MAXIMUM TRAVEL DISTANCE FROM FURTHEST POINT (250 FEET=MAXIMUM ALLOWABLE TRAVEL DISTANCE IN SPRINKELERED BUILDING)
— - — - —	(1 HR) ONE HOUR RATED WALL UNDER STAIRS (TIGHT TO DECK ABOVE UNLESS NOTED OTHERWISE) UL DESIGN #U465

LA COUNTY HEALTH DEPARTMENT NOTES

(PRE-PACKAGED FOOD ONLY FACILITIES)

1 . BUILDING IS TO BE RODENT-PROOFED. DOORS LEADING TO THE OUTSIDE ARE TO BE SELF-CLOSING AND HAVE NO MORE THAN 1/4 INCH GAP AROUND THE PERIMETER OF THE DOOR. SEAL ALL HOLES, GAPS IN THE WALLS, AND CEILINGS. SCREEN WINDOW OPENINGS WITH TIGHT-FITTING FLY SCREENS.

CODE DATA

(BASED ON 2007 CALIFORNIA BUILDING CODE)

1. USE GROUP CLASSIFICATION (302.0)
(Primary) M-MERCANTILE (309)
(Secondary) S-STORAGE (311)

2. CONSTRUCTION TYPE:
TYPE V-B CONSTRUCTION (SPRINKLED)

3. BUILDING HEIGHT (503.0)
Allowable Height (story/feet) 1 STORY/ 40'-0"
Height Modification w/ sprinkler system (504.2)
Allowable height increased by 20' 60'-0"
Allowable stories increased by one 2 STORIES
Actual Height (stories/feet) 2 STORIES/58'-0"

4. BUILDING AREA (503.0)

Allowable Building Area per Floor	9,000
Allowable Total Building Area For Both Floors	18,000
Building Floor Area	12,252
Canopies and Overhangs Area	396
Total Ground Floor Area	12,648
Mezzanine Area	1,429
Total Building Area	14,077

Allowable Area increases w/ sprinkler system (506.3)
Allowable Area increased per floor x 300% 18,000
Allowable increase Total Building Area 54,000

5. FIRE-RESISTANCE RATING REQUIREMENTS FOR BUILDING ELEMENTS (Table 601):

A. Structural frame (including columns, girders, trusses):	0 Hr(s)
B. Bearing walls (interior & exterior)	0 Hr(s)
C. Nonbearing walls & partitions (interior & exterior):	0 Hr(s)
D. Floor construction (including supporting beams & joists):	0 Hr(s)
E. Roof construction (including supporting beams & joists):	0 Hr(s)

6. DESIGN OCCUPANT LOAD (1004.1)

Retail/Sales (30 sf/occ.):	8,424 sf /281 occ.
Pharmacy (100 sf/occ.):	1,137 sf / 12 occ.
Receiving /Cooler (300 sf/occ.):	1,258 sf / 5 occ.
Manager (100 sf/occ.):	98 sf / 1 occ.
Restrooms/Employee (30 sf/occ.):	465 sf / 16 occ.
Mezzanine Floor Storage (300 sf/occ.):	1,429 sf / 5 occ.
TOTAL OCCUPANT LOAD	320 occ.

7. EXITS
A. Minimum Required Egress Width (1005.1):
Required 320 x 0.15" = 48"
Provided 144"
B. Min. Door Width (1008.1.1): 32" Clear
C. Stairways Min. Width (1009.1): 36"
D. Number of Exits (1014.1)

From each Floor	No. Required	No. Provided
Ground Floor	2	3
Upper Floor	1	1

E. Travel Distance (1016.1)
Allowable 250'-0" L.F.
Provided 143'-4" L.F.
F. Min. Corridor Width (1017.2): 44"
G. Max. Dead End Corridor Distance (1017.3): 20'-0"

8. FIRE PROTECTION SYSTEMS

	Required	Provided
A. Sprinkler System (903.2.6):	Yes	Yes
B. Standpipe System (905):	No	No
C. Fire & Smoke Detection (907):	No	Yes
D. Fire Alarm (907.2.7):	No	Yes
E. Smoke Vents (910):	No	No
F. Portable Fire Extinguisher:	Yes	Yes

9. VERTICAL RECIPROCATING CONVEYOR (VRC)
A. Vertical Reciprocating Conveyor (VCR) governed by ANSI B20.1.

10. MINIMUM NUMBER OF PLUMBING FACILTIES (412.5):
Group "M", Retail Occupants (1 per 200): 9,776/200 <= 49
Group "S", Warehouse Occupants (1 per 5000): 2,084/5000 <= 1
49 + 1 =50 (25 Women & 25 Men)
Water Closet - 1 per sex
Lavatories - 1 per sex
Drinking Fountains - 2

11. ACCESSIBILITY (1110B.1.3):
A. Required Number of Checkout Aisles to be Accessible.

	Total No.	Min. No. Required	No. Provided
Customer Service	6	2	2
Pharmacy	3	1	1

B. NATIONAL VENDORS RESPONSIBLE FOR THE CUSTOMER CHECKOUT COUNTER, PHOTO LAB CHECKOUT COUNTER, AND PHOTO LAB MUST ENSURE COMPLIANCE WITH THE HANDICAP ACCESSIBILITY REQUIREMENTS OF 2007 CBC AND MUST NOTIFY THE ARCHITECT OF ANY REQUIRED PLAN CHANGES PRIOR TO CONSTRUCTION

ROBERT KUBICEK Architects And Associates, Inc.
18662 MacArthur Blvd. Ste.200
Irvine, California 92612
(949) 798-3838
www.rkaa.com

LICENSED ARCHITECT CRAIG JOHNSON NO. C12434 STATE OF CALIFORNIA

COPYRIGHT 2011 , ALL RIGHTS RESERVED. ROBERT KUBICEK ARCHITECTS AND ASSOC, INC. THIS DRAWING IS AN INSTRUMENT OF SERVICE. IT IS THE PROPERTY OF ROBERT KUBICEK ARCHITECTS AND ASSOC, INC. AND MAY NOT BE REPRODUCED, OR REPRODUCTION HERE OF USED, WITHOUT WRITTEN PERMISSION OF THE ARCHITECT.

date:	
10/4/10	Bldg. Dept. Submittal
10/15/10	Health Dept. Submittal
1/6/11	Chattel Architecture Submittal
1/27/11	Chattel Architecture Submittal

NOTICE OF ALTERNATE BILLING OR PAYMENT CYCLE: THIS CONTRACT MAY ALLOW THE OWNER TO REQUIRE THE SUBMISSION OF BILLINGS OR ESTIMATES IN BILLING CYCLES OTHER THAN THIRTY DAYS. THIS CONTRACT MAY ALLOW THE OWNER TO MAKE PAYMENT ON SOME ALTERNATIVE SCHEDULE AFTER CERTIFICATION AND APPROVAL OF BILLING AND ESTIMATES. A WRITTEN DESCRIPTION OF SUCH OTHER BILLING AND/OR CYCLE APPLICABLE TO THE PROJECT IS AVAILABLE FROM THE OWNER AT THE OFFICES OF

OR HIS DESIGNATED AGENT SHALL PROVIDE THIS WRITTEN DESCRIPTION ON REQUEST

DEVELOPER:
CHARLES COMPANY
9034 W. SUNSET BLVD.
WEST HOLLYWOOD
CA 90069
TEL (310) 247-0900
FAX (310) 247-1525

CVS pharmacy
STORE #4524
909 S. ATLANTIC BLVD
LOS ANGELES, CA

design RKA
drawn RKA
check RKA

sheet A-0.1
of
job 09151

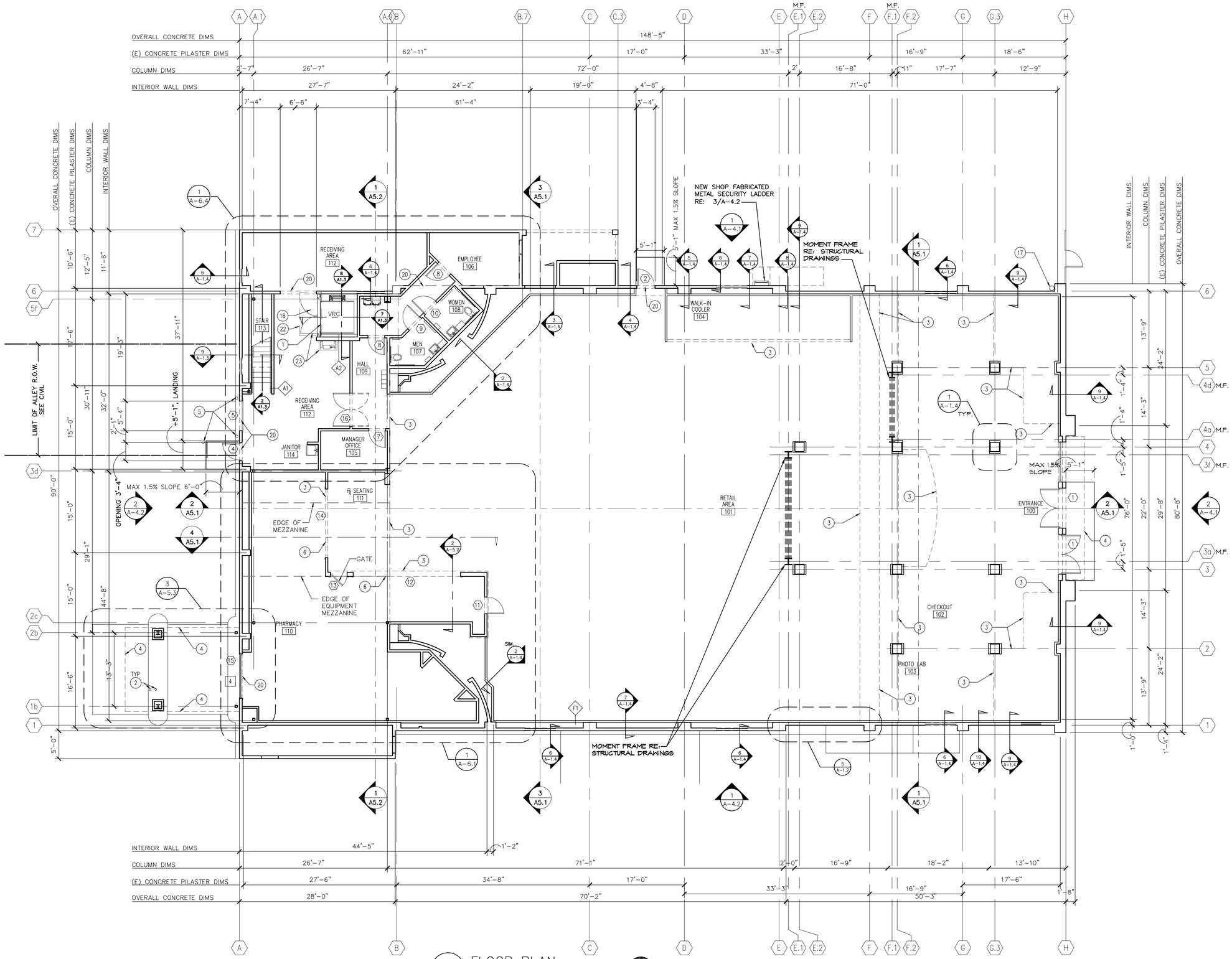

1 A-1.1 FLOOR PLAN
SCALE: 1/8"=1'-0"

S.H. INTERIOR IMPROVEMENT(S) A PART OF SHELL PERMIT.

T.I. INTERIOR IMPROVEMENT(S) NOT A PART OF SHELL PERMIT, FOR INFORMATIONAL PURPOSES ONLY.

NOTES BY SYMBOL

1. NON PASSENGER VRC AND POWER UNIT
2. 4"ø PIPE BOLLARD – RE: 4/A-6.2 AND EXTERIOR FINISH SCHEDULE.
3. FACE OF SOFFIT / VALANCE ABOVE – RE: WALL SECTIONS.
4. ROOF LINE ABOVE.
5. 6"ø PIPE BOLLARD – RE: 4/A-6.2 AND EXTERIOR FINISH SCHEDULE.
6. COILING GRILLE
7. 6" THICK CONCRETE PAD FOR COMPACTOR AND LOADING AREA – RE: STRUCTURAL DRAWINGS. (SEE CIVIL)
8. COMPACTOR. (SEE CIVIL)
9. COMPACTOR ENCLOSURE (SEE CIVIL)
10. (NOT USED)
11. (NOT USED)
12. GAS METER
13. ELECTRIC DISCONNECT & METER BY UTILITIES COMPANY – RE: ELECTRICAL DRAWINGS.
14. ELECTRICAL DISCONNECT – RE: ELECTRICAL DRAWINGS.
15. (NOT USED)
16. CABINET BY MILLWORK SUPPLIER – RE: FIXTURE PLAN F-1
17. FIRE RISER
18. VRC GATES BY VRC MANUFACTURER
19. KNOX BOX IF REQUIRED. MOUNT PER FIRE DEPARTMENT REQUIREMENTS.
20. NEW OPENING IN EXISTING WALL.
21. SITE ACCESSIBILITY SIGN. RE: 8/AS-1.2 (SEE CIVIL)
22. VRC TO HAVE MIN 8'-7 1/2" VERTICAL CLEARANCE TO 4'-0" IN FRONT OF GATE
23. VRC GATES AND POWER UNIT BY VRC MANUFACTURER

LEGEND

- X — WINDOW DESIGNATION RE: SHT A-7.2
- X — INDICATES DOOR-RE: SHT A-7.2 FOR DOOR SCHEDULE
- X — PARTITION TYPE – RE: SHT A-1.2
- X — FLOOR PLAN NOTES THIS SHT
- M.F. 3a — MOMENT FRAME COLUMN
- 3 — COLUMN

BUILDING CODE DATA:

The width and height of required exit doorways shall be not less than 3 feet in nominal width by 6 feet 8 inches in nominal height and shall be capable of opening such that the clear width is not less than 32 inches.
Building Code 1003.3.1.3

Illuminated exit signs shall be located as necessary to clearly indicate the direction of egress travel. Additional exit signs may be required at time of field inspection.
Building Code 1003.2.8.2

18662 MacArthur Blvd.
Ste.200
Irvine, California 92612
(949) 796-3838
www.rkaa.com

ROBERT KABLECK Architects And Associates, Inc.

LICENSED ARCHITECT CRAIG JOHNSON NO. C12434 STATE OF CALIFORNIA

COPYRIGHT 2007 ALL RIGHTS RESERVED. THIS DRAWING IS AN INSTRUMENT OF SERVICE. THIS DRAWING IS AN INSTRUMENT OF SERVICE. IT IS THE PROPERTY OF ROBERT KUBECK ARCHITECTS, AND MUST BE RETURNED UPON REQUEST. REPRODUCTION OR USE WITHOUT WRITTEN PERMISSION OF THE ARCHITECT.

date:
10/4/10 Bldg. Dept. Submittal
10/15/10 Health Dept. Submittal

NOTICE OF ALTERNATE BILLING OR PAYMENT CYCLE: THIS CONTRACT MAY ALLOW THE OWNER TO REQUIRE THE SUBMISSION OF BILLINGS ON ANY DATE OTHER THAN THE 1ST OR 15TH DAY OF EACH MONTH. THE CONTRACT MAY ALLOW THE OWNER TO MAKE PAYMENT ON SOME ALTERNATIVE SCHEDULE OTHER THAN 30 DAYS FROM RECEIPT OF BILLING AND ESTIMATES. A WRITTEN DESCRIPTION OF SUCH OTHER BILLING AND/OR CYCLE APPLICABLE TO THE OWNER IS AVAILABLE FROM THE OWNER AT THE OFFICES OF

OR HIS DESIGNATED AGENT SHALL PROVIDE THIS WRITTEN DESCRIPTION ON REQUEST.

DEVELOPER:
CHARLES COMPANY
9034 W. SUNSET BLVD.
WEST HOLLYWOOD
CA 90069
TEL (310) 247-0900
FAX (310) 247-1525

cvs pharmacy
STORE #4524
909 S. ATLANTIC BLVD
LOS ANGELES, CA

design	RKA	check	RKA
drawn	RKA		

sheet A-1.1

job 09151

1/27/2011 3:25:17 PM

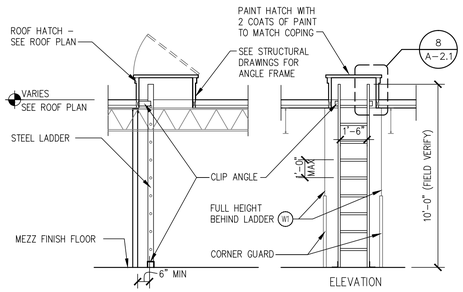

3 A–1.2 ROOF LADDER DETAIL
SCALE: 1/4" = 1'–0"

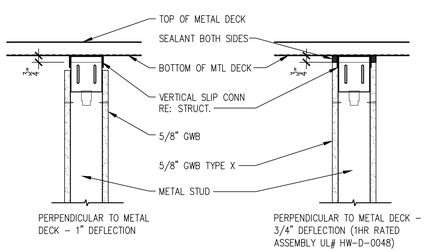

4 A–1.2 SLIP JOINT
SCALE: 1 1/2" = 1'–0"

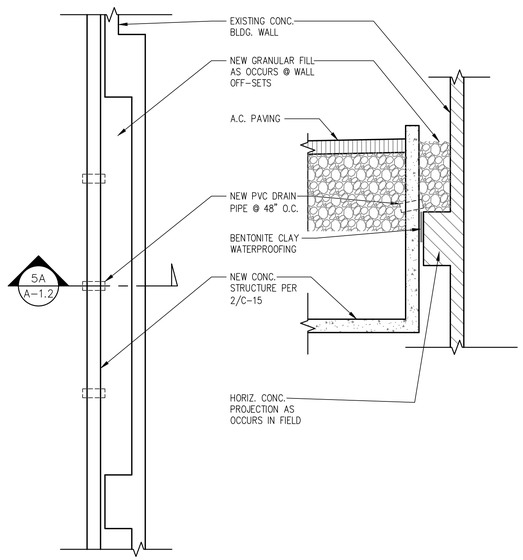

5 A–1.2 SITE RETAINING WALL, PLAN
SCALE: 3/8" = 1'–0"

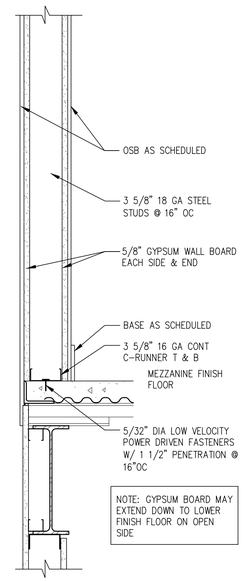

NOTE: GYPSUM BOARD MAY EXTEND DOWN TO LOWER FINISH FLOOR ON OPEN SIDE

5A A–1.2 SITE RETAINING WALL, SECTION
SCALE: 3/8" = 1'–0"

6 A–1.2 SECTION
SCALE: 1 1/2" = 1'–0"

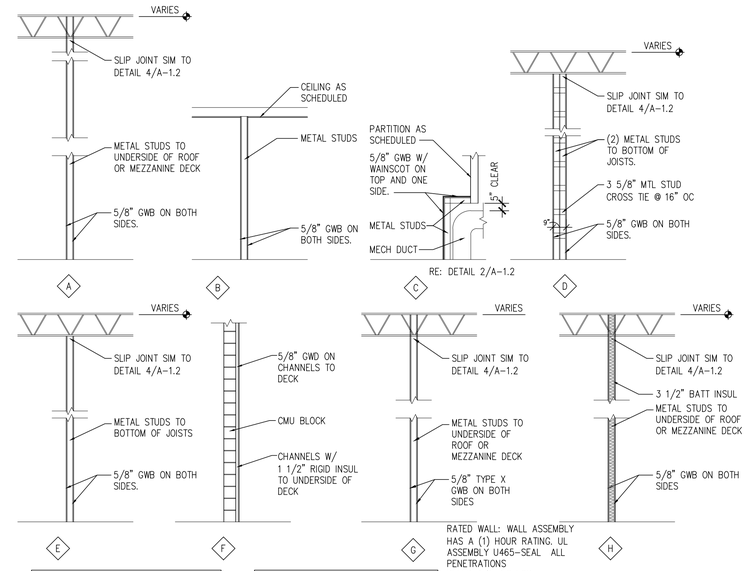

RATED WALL: WALL ASSEMBLY HAS A (1) HOUR RATING. UL ASSEMBLY U465–SEAL ALL PENETRATIONS
REFER 4/A–1.2 FOR SLIP JOINT DETAIL

STUD DESIGNATIONS	
STUD	DESCRIPTION
1	3 5/8" @ 16" OC
2	6" @ 16" OC
3	1 1/2" Z–CHANNELS @ 24" OC
4	2 1/2" @ 16" OC
REFER TO STRUCTURAL FOR STUD GA	

INSULATION MINIMUM VALUES	
ROOF	R=25
WALLS	
1 1/2" RIGID INSUL	R=7.5
3 1/2" BATT INSUL	R=11
6" BATT INSUL	R=19

NOTE: PROVIDE MOISTURE RESISTANT GWD @ ALL WET AREAS

NOTE: REFER TO FLOOR PLANS FOR LOCATION OF PARTITION TYPES

PARTITION TYPES
NOTE: ALL PARTITION TYPES MAY NOT BE USED

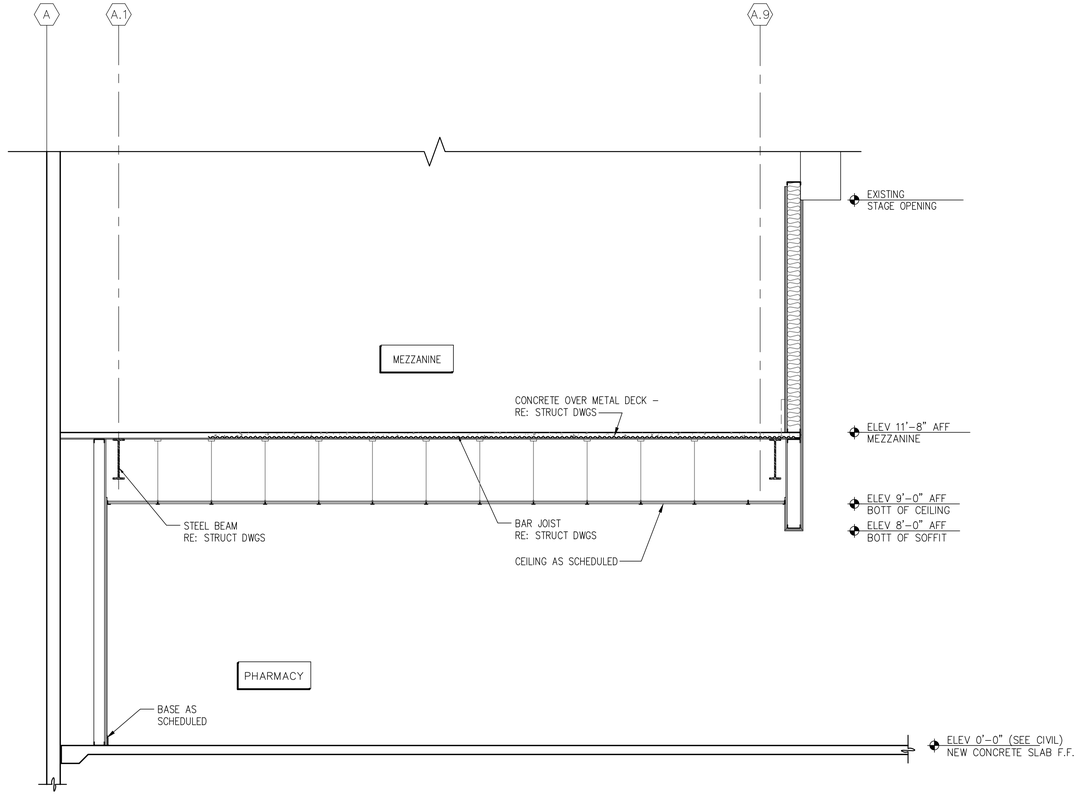

1 A–1.2 BUILDING SECTION
SCALE: 3/8" = 1'–0"

– A–1.2 SECTIONS, DETAILS & PARTITION TYPES

18662 MacArthur Blvd.
Ste.200
Irvine, California 92612
(949) 796-3838
www.rka.com

ROBERT KABLECK Architects And Associates, Inc.

LICENSED ARCHITECT CRAIG JOHNSON NO. C12434 STATE OF CALIFORNIA

COPYRIGHT 2001 ALL RIGHTS RESERVED. THIS DRAWING IS AN INSTRUMENT OF SERVICE. THIS DRAWING IS AN INSTRUMENT OF SERVICE. IT IS THE PROPERTY OF ROBERT KABLECK ARCHITECTS, AND MUST BE RETURNED UPON REQUEST. REPRODUCTION, OR REPRODUCTION HERE OF USED, WITHOUT WRITTEN PERMISSION OF THE ARCHITECT.

date:	
10/4/10	Bldg Dept. Submittal
10/15/10	Health Dept. Submittal

NOTICE OF ALTERNATE BILLING OR PAYMENT CYCLE: THIS CONTRACT MAY ALSO BE BILLED OR PAID ACCORDING TO ALTERNATE BILLING OR PAYMENT ESTIMATES IN BILLING CYCLES OTHER THAN THIRTY (30) DAYS AFTER CERTIFICATION AND APPROVAL OF BILL OR PAYMENT ON DAYS ALTERNATE SCHEDULE AFTER CERTIFICATION AND APPROVAL OF BILLING. ALTERNATE BILLING OR PAYMENT CYCLES, IF ANY OTHER BILLING AND/OR COST ALLOCATIONS APPLICABLE TO THE PROJECT IS AVAILABLE FROM THE OWNER AT THE OFFICES OF

OR HIS DESIGNATED AGENT SHALL PROVIDE THIS WRITTEN DESCRIPTION ON REQUEST

DEVELOPER:
CHARLES COMPANY
9034 W. SUNSET BLVD.
WEST HOLLYWOOD
CA 90069
TEL (310) 247-0900
FAX (310) 247-1525

CVS pharmacy
STORE #4524
909 S. ATLANTIC BLVD
LOS ANGELES, CA

design RKA
drawn RKA
check RKA

sheet A-1.2
job 09151

1/27/2011 3:25:56 PM

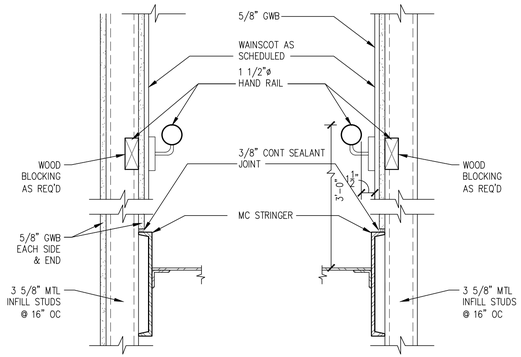

1 / A-1.3 SECTION AT STAIR WALL
SCALE: 1 1/2" = 1'-0"

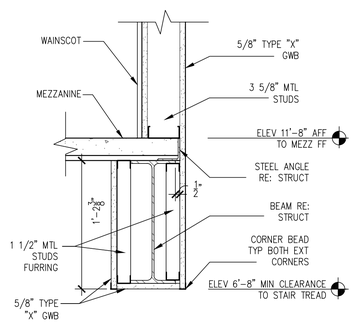

5 / A-1.3 BEAM ENCASEMENT DETAIL
SCALE:1 1/2" = 1'-0"

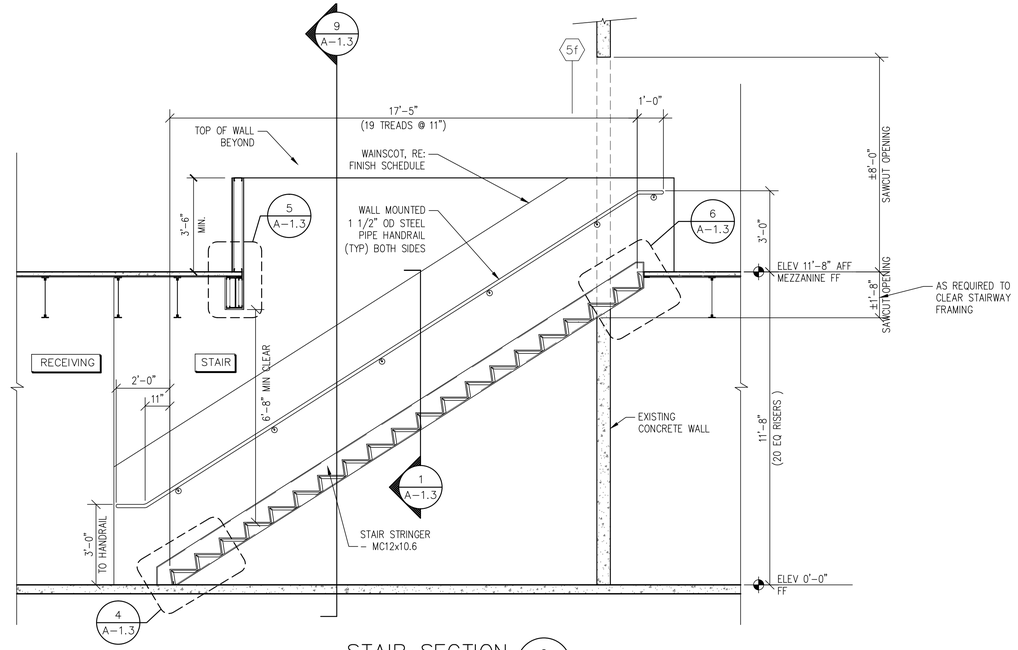

STAIR SECTION 2 / A-1.3
SCALE: 3/8" = 1'-0"

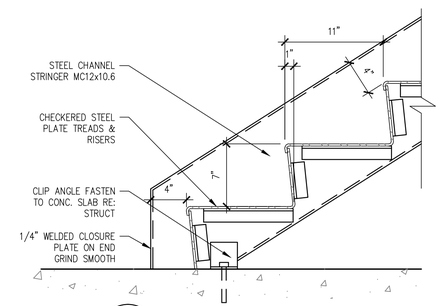

4 / A-1.3 STAIR DETAIL
SCALE: 1 1/2" = 1'-0"

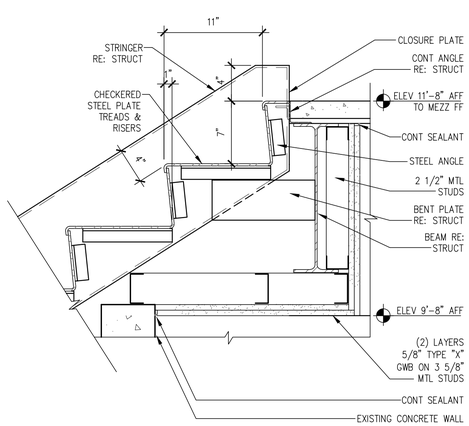

6 / A-1.3 STAIR DETAIL
SCALE: 1 1/2" = 1'-0"

NOTE: THIS ASSEMBLY ONLY OCCURS UNDER STAIR. UL DESIGN #N501

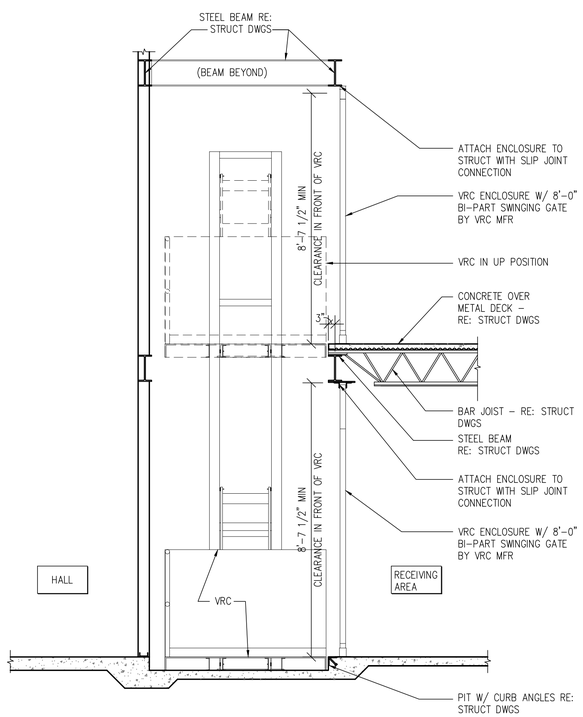

7 / A-1.3 VRC SECTION
SCALE: 3/8" = 1'-0"

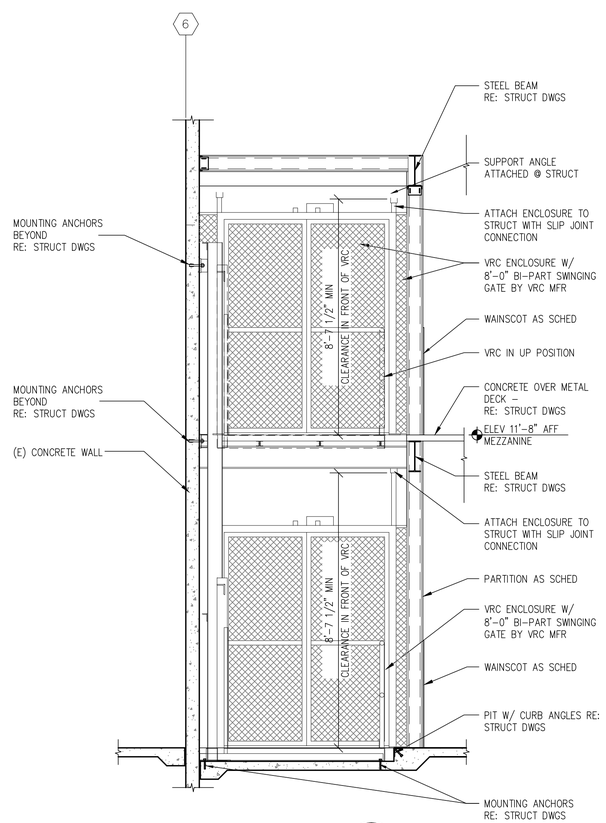

8 / A-1.3 VRC SECTION
SCALE: 3/8" = 1'-0"

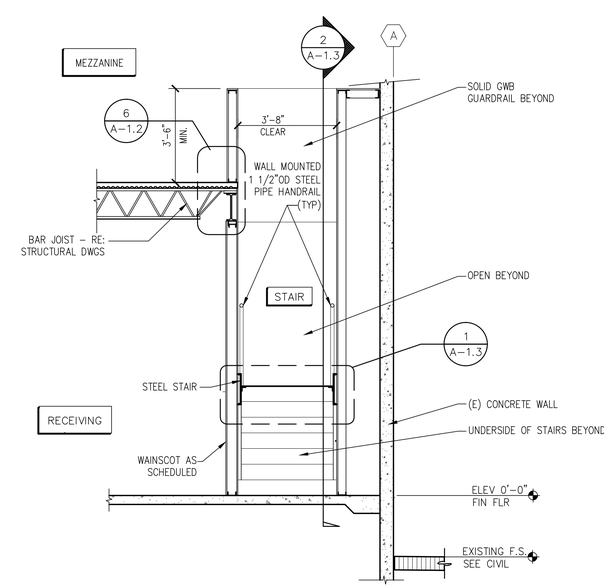

9 / A-1.3 STAIR SECTION
SCALE: 3/8" = 1'-0"

STAIR SECTIONS A-1.3

1/27/2011 3:26:48 PM

18662 MacArthur Blvd. Ste.200
Irvine, California 92612
(949) 796-3838
www.rkaa.com

ROBERT KUBICEK Architects And Associates, Inc.

LICENSED ARCHITECT CRAIG JOHNSON NO. C12434 STATE OF CALIFORNIA

COPYRIGHT 2001 ALL RIGHTS RESERVED. ROBERT KUBICEK ARCHITECTS AND ASSOC. INC. THIS DRAWING IS AN INSTRUMENT OF SERVICE, IT IS THE PROPERTY OF ROBERT KUBICEK ARCHITECTS AND ASSOC. INC. AND MAY NOT BE REPRODUCED, OR REPRODUCTION HERE OF USED, WITHOUT WRITTEN PERMISSION OF THE ARCHITECT.

date:	
10/4/10	Bldg. Dept. Submittal
10/15/10	Health Dept. Submittal
1/6/11	Chattel Architecture Submittal
1/27/11	Chattel Architecture Submittal

NOTICE OF ALTERNATE BILLING OR PAYMENT CYCLE: THIS CONTRACT MAY ALLOW THE OWNER TO ALTERNATE BILLING CYCLES OR MAKE PAYMENT ALTERNATE BILLING CYCLES OTHER THAN THIRTY (30) DAYS AFTER RECEIPT OF INVOICE OR MAKE PAYMENT ON DONE ALTERNATE SCHEDULE OF VALUES BASED ON PERCENTAGE OF WORK PERFORMED AND CONTRACTOR AND SUBCONTRACTOR OTHER BILLING AND/OR CYCLE APPLICABLE TO THE PROJECT IS AVAILABLE FROM THE OWNER AT THE OFFICES OF

OR HIS DESIGNATED AGENT SHALL PROVIDE THIS WRITTEN DESCRIPTION ON REQUEST.

DEVELOPER:
CHARLES COMPANY
9034 W. SUNSET BLVD.
WEST HOLLYWOOD
CA 90069
TEL (310) 247-0900
FAX (310) 247-1525

CVS pharmacy
STORE #4524
909 S. ATLANTIC BLVD
LOS ANGELES, CA

design	RKA	drawn	RKA
check	RKA		

sheet A-1.3 of job 09151

GENERAL NOTE:
COORDINATE WITH STRUCTURAL ON LATERAL ATTACHMENT REQUIRED TO EXISTING WALLS, (PER COUNTY P.C. CORRECTION).

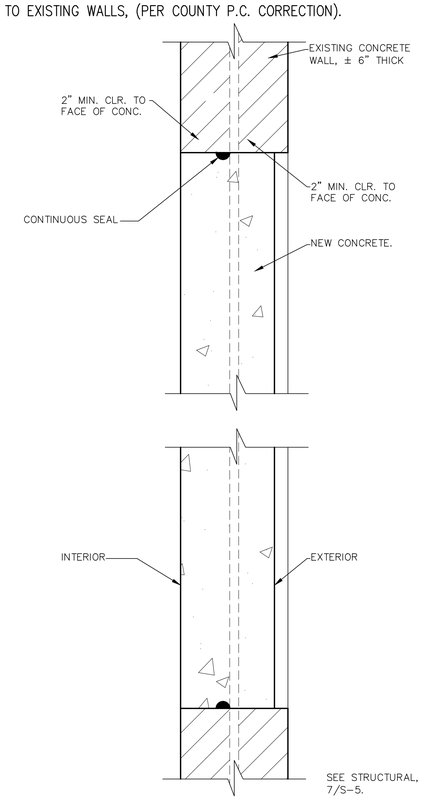

6 / A-1.4 EXIST' OPENING REVEAL INFILL
SCALE: 3" = 1'-0"

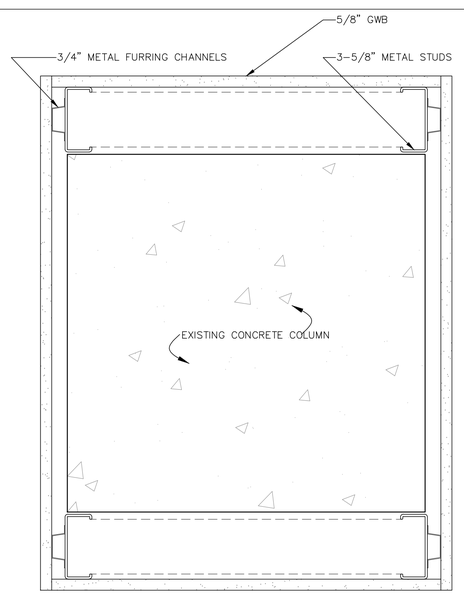

1 / A-1.4 FURRED EXIST' COLUMN
SCALE: 3" = 1'-0"

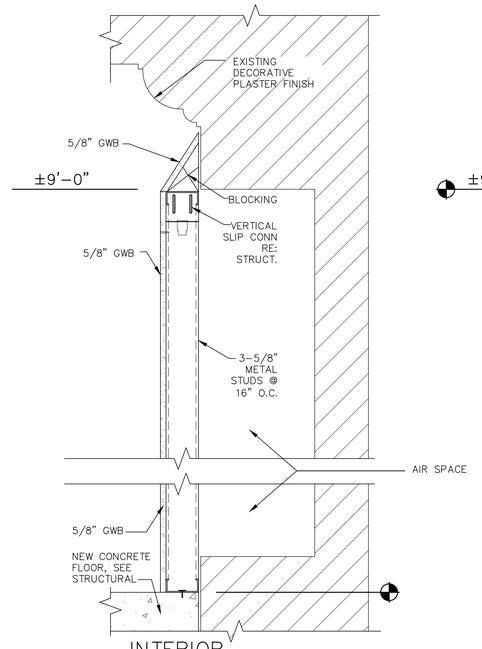

7 / A-1.4 INTERIOR PERIMETER WALL
SCALE: 1 1/2" = 1'-0"

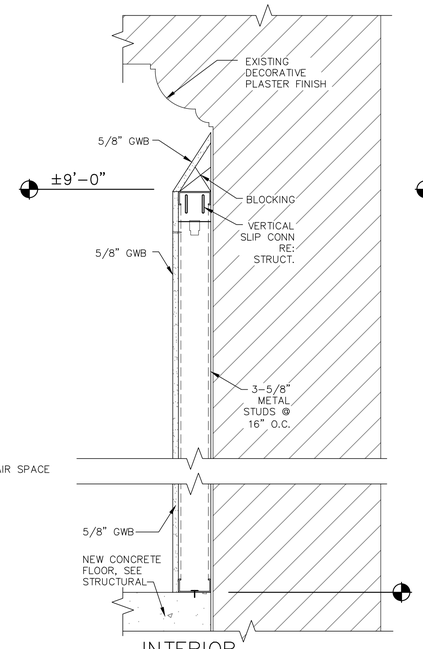

8 / A-1.4 INTERIOR PERIMETER WALL
SCALE: 1 1/2" = 1'-0"

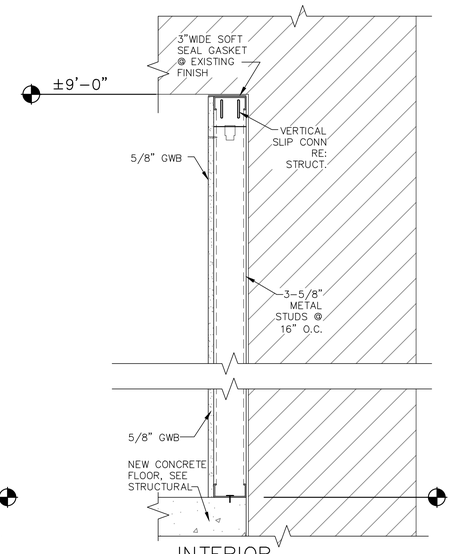

9 / A-1.4 INTERIOR PERIMETER WALL
SCALE: 1 1/2" = 1'-0"

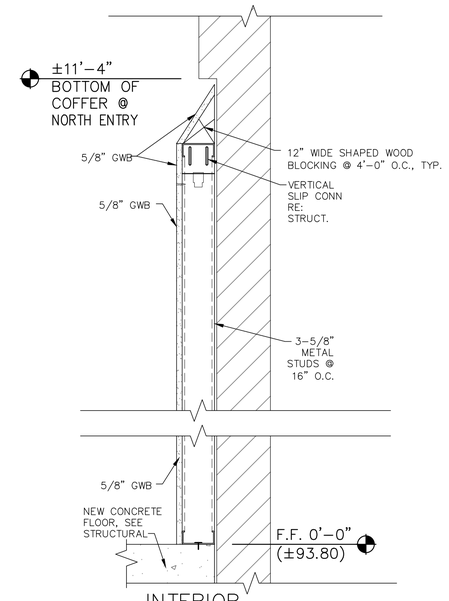

10 / A-1.4 INTERIOR PERIMETER WALL
SCALE: 1 1/2" = 1'-0"

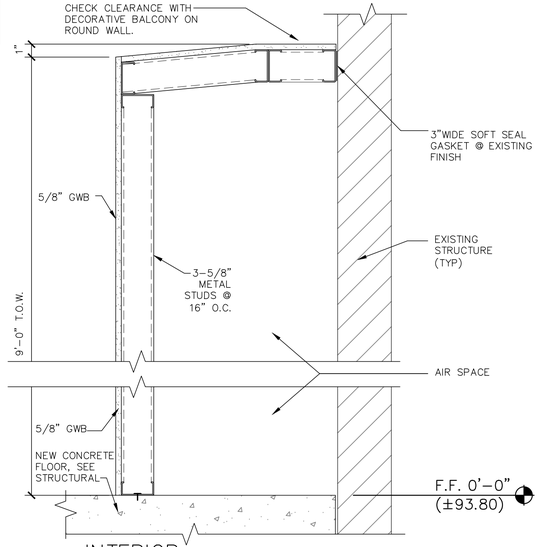

2 / A-1.4 INTERIOR PERIMETER WALL
SCALE: 1 1/2" = 1'-0"

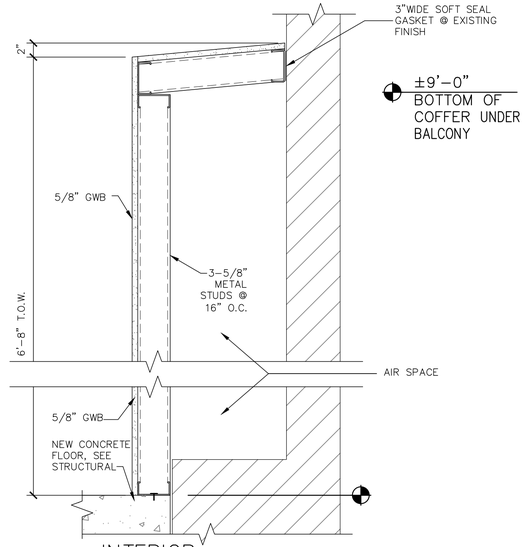

3 / A-1.4 INTERIOR PERIMETER WALL
SCALE: 1 1/2" = 1'-0"

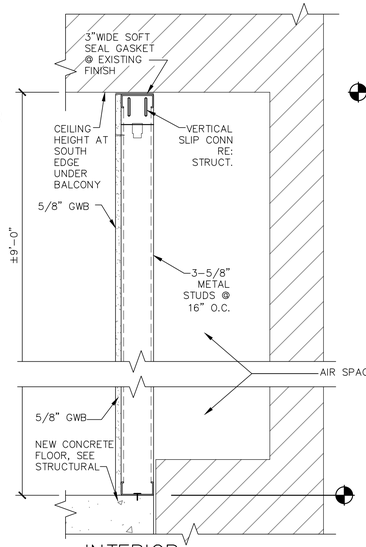

4 / A-1.4 INTERIOR PERIMETER WALL
SCALE: 1 1/2" = 1'-0"

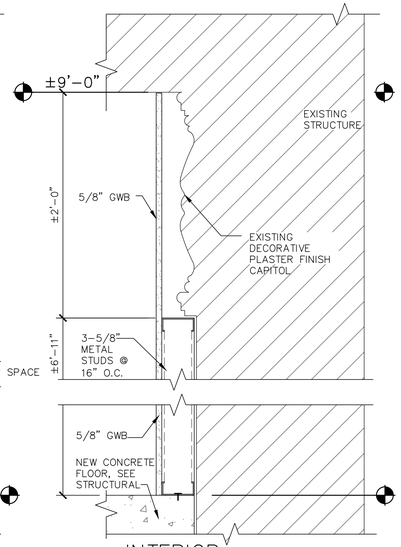

5 / A-1.4 INTERIOR PERIMETER WALL
SCALE: 1 1/2" = 1'-0"

– / A-1.4 WALL SECTIONS

1/27/2011 3:27:28 PM

ROBERT KABICEK Architects And Associates, Inc.
18662 MacArthur Blvd. Ste.200
Irvine, California 92612
(949) 796-3838
www.rkaa.com

LICENSED ARCHITECT CRAIG JOHNSON NO. C12434 STATE OF CALIFORNIA

COPYRIGHT 2001 ALL RIGHTS RESERVED. THE ARCHITECTURAL WORK DEPICTED IN THIS DRAWING IS AN INSTRUMENT OF SERVICE, IT IS THE PROPERTY OF ROBERT KABICEK ARCHITECTS, AND MAY NOT BE USED FOR ANY PURPOSE WHATSOEVER, OR REPRODUCED HERE OF USED, WITHOUT WRITTEN PERMISSION OF THE ARCHITECT.

date:	
10/4/10	Bldg. Dept. Submittal
10/15/10	Health Dept. Submittal
1/6/11	Chattel Architecture Submittal
1/27/11	Chattel Architecture Submittal

NOTE: IF ALTERNATE BILLING OR PAYMENT CYCLE THE CONTRACT MAY ALLOW THE OWNER TO DEDUCT THE SUBMISSION OF BILLINGS ON THE 25TH OF EACH MONTH AND PAYMENT THEREOF WITHIN 30 DAYS. THE CONTRACT MAY ALLOW FOR CHANGE IN WORK PAYMENT ON DEMAND. ALTERNATIVE FORCEOUT PAYMENT PROCEDURES MAY BE ADDED TO THE CONTRACT AND EXPANDED. A WRITTEN DESCRIPTION OF SUCH ALTERNATIVE AND/OR FORCE MAJEURE TO THE PROJECT IS AVAILABLE FROM THE OWNER AT THE OFFICES OF

OR HIS DESIGNATED AGENT SHALL PROVIDE THIS WRITTEN DESCRIPTION ON REQUEST

DEVELOPER:
CHARLES COMPANY
9034 W. SUNSET BLVD.
WEST HOLLYWOOD
CA 90069
TEL (310) 247-0900
FAX (310) 247-1525

cvs pharmacy
STORE #4524
909 S. ATLANTIC BLVD
LOS ANGELES, CA

design RKA
drawn RKA
check RKA

sheet A-1.4 of
job 09151

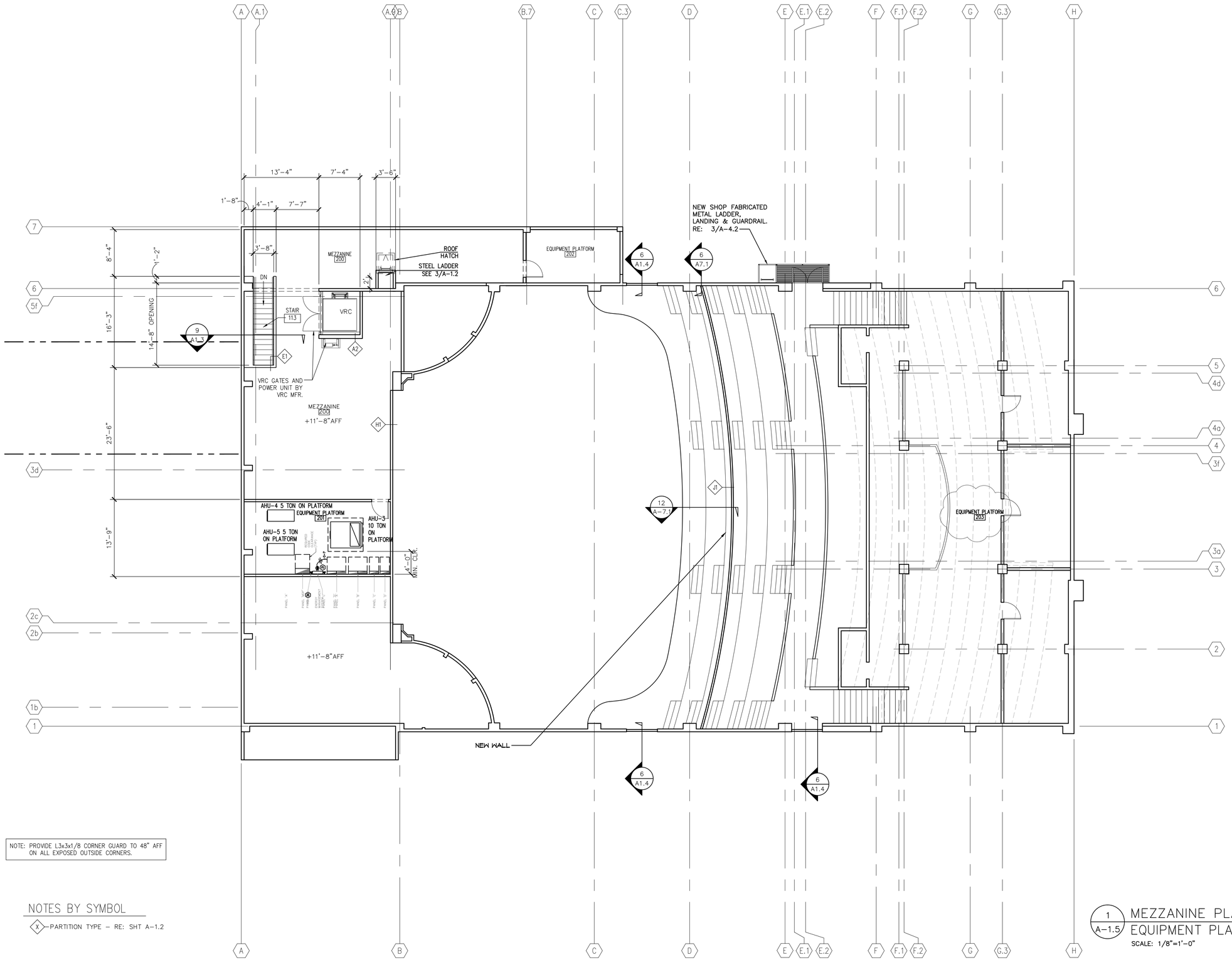

NOTE: PROVIDE L3x3x1/8 CORNER GUARD TO 48" AFF ON ALL EXPOSED OUTSIDE CORNERS.

NOTES BY SYMBOL

X — PARTITION TYPE – RE: SHT A-1.2

1 / A-1.5 MEZZANINE PLAN & EQUIPMENT PLATFORM

SCALE: 1/8"=1'-0"

18662 MacArthur Blvd.
Ste 200
Irvine, California 92612
(949) 796-3838
www.rka.com

ROBERT KABLECK
Architects And Associates, Inc.

LICENSED ARCHITECT
CRAIG JOHNSON
NO. C12434
STATE OF CALIFORNIA

COPYRIGHT 2011 ALL RIGHTS RESERVED.
THIS DRAWING IS AN INSTRUMENT OF SERVICE. IT IS THE PROPERTY OF ROBERT KABLECK ARCHITECTS AND ASSOC. INC. AND MAY NOT BE REPRODUCED, OR REPRODUCTION HERE OF USED, WITHOUT WRITTEN PERMISSION OF THE ARCHITECT.

date:	
10/4/10	Bldg. Dept. Submittal
10/15/10	Health Dept. Submittal

NOTICE OF ALTERNATE BILLING OR PAYMENT CYCLE: THIS CONTRACT MAY ALLOW THE OWNER TO ALTERNATE BILLING OR PAYMENT CYCLE. THE ALTERNATE BILLING CYCLES OTHER THAN THIRTY (30) DAYS, MAY ALSO ALLOW THE OWNER TO DELAY MAKING PAYMENT ON DONE ALTERNATE CHARGES UNTIL THE COMPLETION AND APPROVAL OF THE PROJECT. THE ALTERNATE BILLING OR PAYMENT CYCLE OTHER BILLING AND/OR CYCLE APPLICABLE TO THE PROJECT IS AVAILABLE FROM THE OWNER AT THE OFFICES OF

OR HIS DESIGNATED AGENT SHALL PROVIDE THIS WRITTEN DESCRIPTION ON REQUEST.

DEVELOPER:
CHARLES COMPANY
9034 W. SUNSET BLVD.
WEST HOLLYWOOD
CA 90069
TEL (310) 247-0900
FAX (310) 247-1525

CVS pharmacy
STORE #4524
909 S. ATLANTIC BLVD
LOS ANGELES, CA

design	RKA
drawn	RKA
check	RKA
sheet	A-1.5
job	09151

1/27/2011 3:28:07 PM

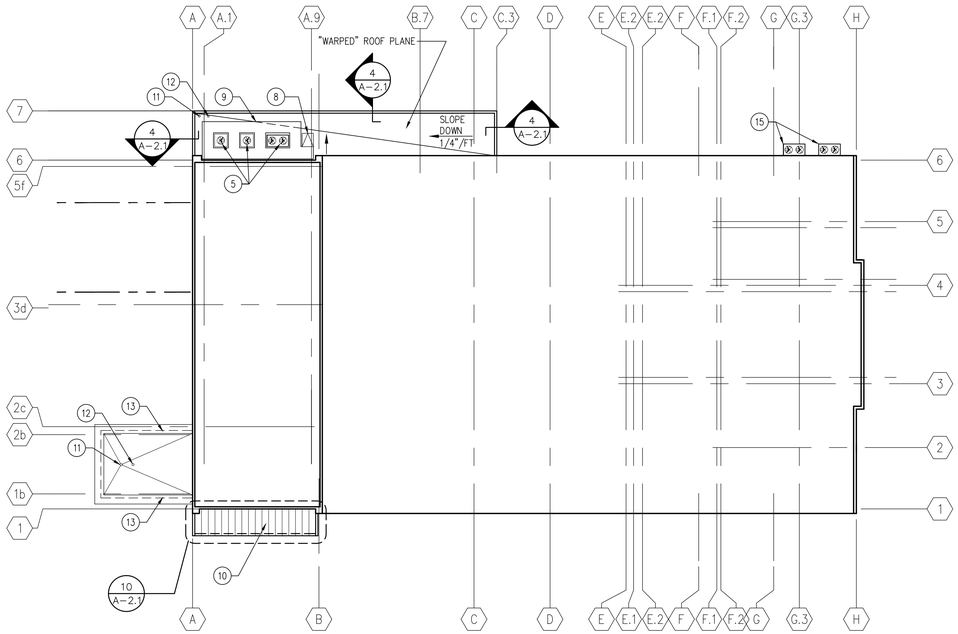

1 A-2.1 ROOF PLAN
SCALE: 1/16" = 1'-0"

NOTES BY SYMBOL:

1. SANITARY VENT – RE: PLUMBING DWGS & DETAIL 2/A-2.1
2. SEALANT POCKET FOR MUZAK SYSTEM RE: DETAIL 6/A-2.1
3. EXHAUST FAN FROM RESTROOM(S) – RE: MECH DWGS
4. (NOT USED)
5. COORDINATE ROOFTOP LOCATIONS WITH MECH AND PLUMBING. RE: DETAIL 3/A-2.1 FOR ROOF CURB.
6. PIPE PENETRATION FOR CONDENSATE LINE – RE: 6/A-2.1
7. COOLER CONDENSING UNIT MOUNTED ON 34"x64" MULTI-PURPOSE EQUIPMENT SUPPORT. RETURN REFRIGERANT AND ELEC LINES THRU CURB INTO CEILING PLENUM. RE: 7/A-2.1 FOR SUPPORT DETAIL.
8. ROOF HATCH RE: DETAIL 8/A-2.1
9. ROOF WALKWAY PAD 30" MIN WIDTH – RE: 5/A-2.1
10. STANDING SEAM METAL ROOF RE: DETAIL 10/A-2.1
11. ROOF DRAIN RE: DETAIL 9/A-2.1
12. OVERFLOW DRAIN RE: DETAIL 9/A-2.1
13. DRIVE THRU EXTRUDED ALUM LOUVERED VENT, RE: 5/A-5.3
14. (NOT USED)
15. CONDENSING UNIT MOUNT AT GROUND LEVEL PER MFR REQUIREMENTS, RE: MECH & PLBG DWGS

GENERAL ROOF NOTES

1. RE: MECH/PLUMBING DWGS FOR ADDITIONAL NOTES AND DETAILS.
2. VERIFY LOCATIONS OF ALL ROOF PENETRATIONS WITH STRUCT, MECH AND PLUMBING DWGS
3. ALL EQUIPMENT ON ROOF TO BE MOUNTED ON CURBS AND FASTENED PER MFR RECOMMENDATIONS, RE: DETAIL, THIS SHT
4. EXHAUST FANS AND VENTS TO BE LOCATED A MINIMUM OF 10'-0" FROM A/C INTAKE. VERIFY ALL LOCATIONS WITH MECH AND PLUMBING DWGS
5. MECH SUB-CONTRACTOR TO COORDINATE INSTALLATION AND ACCEPTANCE OF PRE-FABRICATED CURBS AND PENETRATIONS WITH ROOF MEMBRANE SUB-CONTRACTOR. GC TO PROVIDE ALL NECESSARY BLOCKING, NAILERS, ETC. AS NECESSARY FOR A WATERTIGHT AND WATERPROOF ROOF.
6. IT IS THE GENERAL CONTRACTOR'S RESPONSIBILITY TO VERIFY, COORDINATE AND /OR INSTALL ALL ADJACENT AND/OR RELATED FLASHINGS, BLOCKINGS, NAILERS, INSULATION STOPS, CRICKETS, ETC. NECESSARY FOR THE COMPLETE INSTALLATION OF THE ROOF MEMBRANE WHICH ARE REQUIRED FOR A COMPLETE, WARRANTED, WATERTIGHT, WATERPROOF INSTALLATION.
7. ALL ROOF SLOPES ARE TO HAVE A MINIMUM 1/8" PER FT FALL WHERE CRICKET VALLEYS OCCUR. CRICKETS ARE TO BE PROVIDED WITH SUFFICIENT DEPTH AND SLOPE TO ACCOMMODATE A MINIMUM 1/8" PER FOOT FALL AT THE VALLEY.
8. ALL ROOF SLOPES HAVE A 1/4" PER FOOT FALL, UNLESS NOTED OTHERWISE.
9. CIVIL ENGINEER TO COORDINATE STORM SEWER CONNECTION WITH SITE PLANS.

ROOF PLAN LEGEND

- COPING — 1/4" → SLOPE TAPERED INSULATION AT 1/4" PER FOOT
- ROOF HATCH
- RTU # — ROOF TOP UNIT RE: CURB DETAIL, THIS SHT RE: MECH DWGS FOR DETAILS ON UNITS. — SLOPE → SLOPE ROOF PER ROOF STRUCTURE

INSULATION MINIMUM VALUES	
ROOF	R=25
WALLS	
1 1/2" RIGID INSUL	R=7.5
3 1/2" BATT INSUL	R=11
6" BATT INSUL	R=19

NOTE: REFER TO SPECIFICATIONS FOR ADDITIONAL EIFS INFORMATION

ROOF CLASSIFICATION – CLASS A
ROOF: WHITE TPO

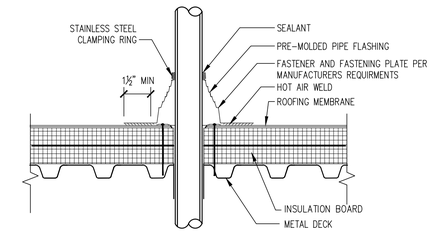

2 A-2.1 PIPE PENETRATION DETAIL
SCALE: 1 1/2" = 1'-0" RE: NOTES BY SYMBOL 1

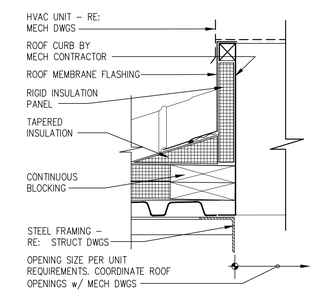

3 A-2.1 TYP ROOF CURB
SCALE: 1 1/2" = 1'-0" RE: NOTES BY SYMBOL 5

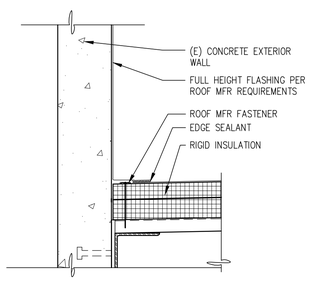

4 A-2.1 FLASHING FOR PARAPETS
SCALE: 1 1/2"=1'-0"

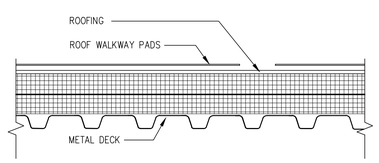

5 A-2.1 WALKWAY PAD DETAIL
SCALE: 1 1/2" = 1'-0" RE: NOTES BY SYMBOL 9

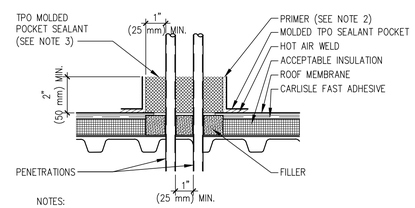

NOTES:

1. TEMPERATURE OF PIPE MUST NOT EXCEED 120° F (49° C).
2. PRIMER MUST BE APPLIED TO ALL INSIDE SURFACES AND PENETRATIONS PRIOR TO FILLING WITH SEALANT.
3. FILL POCKET COMPLETELY WITH TPO MOLDED POCKET SEALANT UNTIL RIM IS COVERED WITH SEALANT; ENSURE ALL VOIDS ARE FILLED.
4. SEALANT POCKET TO BE MINIMUM 1" (25 mm) FROM PENETRATION ON ANY SIDE.

6 A-2.1 SEALANT POCKET
SCALE: 3" = 1'-0" RE: NOTES BY SYMBOL 2 6

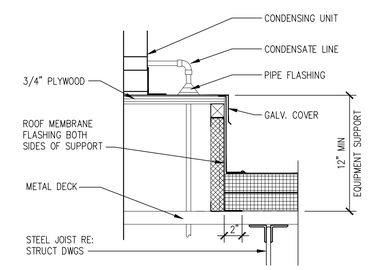

7 A-2.1 EQUIPMENT SUPPORT
SCALE: 1 1/2" = 1'-0" RE: NOTES BY SYMBOL 7

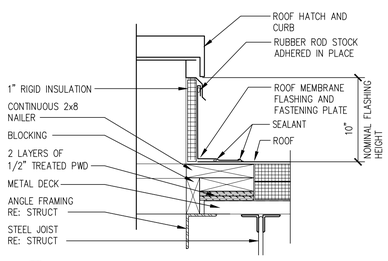

8 A-2.1 ROOF HATCH DETAIL
SCALE: 1 1/2" = 1'-0" RE: NOTES BY SYMBOL 8

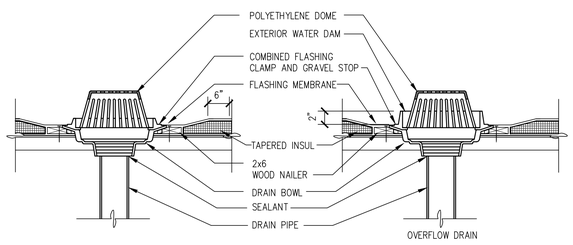

9 A-2.1 TYP ROOF DRAIN DETAIL
SCALE: 3/4"=1'-0" RE: NOTES BY SYMBOL 11 12

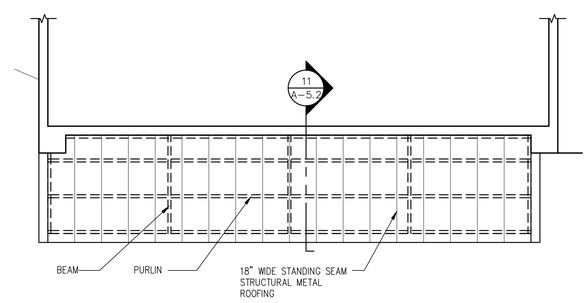

10 A-2.1 ENLARGED ENCLOSURE PLAN
SCALE: 1/4" = 1'-0"

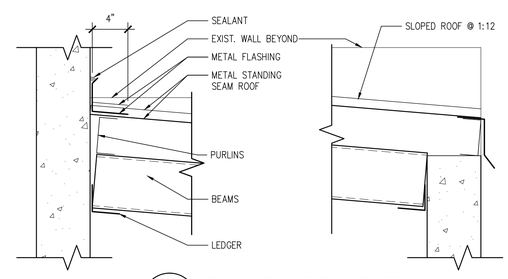

11 A-2.1 ENCLOSURE SECTION
SCALE: 1-1/2" = 1'-0"

18662 MacArthur Blvd.
Ste.200
Irvine, California 92612
(949) 796-3838
www.rkaa.com

ROBERT KABLECK Architects And Associates, Inc.

LICENSED ARCHITECT CRAIG JOHNSON NO. C12434 STATE OF CALIFORNIA

COPYRIGHT 2011 ALL RIGHTS RESERVED.
ROBERT KABLECK ARCHITECTS AND ASSOCIATES
THIS DRAWING IS AN INSTRUMENT OF SERVICE. IT IS THE PROPERTY OF ROBERT KABLECK ARCHITECTS. ANY USE, REUSE, OR REPRODUCTION OF THIS DRAWING OR REPRODUCTION HERE OF USED, WITHOUT WRITTEN PERMISSION OF THE ARCHITECT.

date:	
10/4/10	Bldg. Dept. Submittal
10/15/10	Health Dept. Submittal
1/6/11	Chattel Architecture Submittal
1/27/11	Chattel Architecture Submittal

NOTICE OF ALTERNATE BILLING OR PAYMENT CYCLE: THIS CONTRACT MAY ALLOW THE OWNER TO ALTERNATE BILLING OR PAYMENT BETWEEN ESTIMATES IN BILLING CYCLES OTHER THAN THIRTY DAYS. THE OWNER MAY ALSO MAKE PAYMENT ON DONE - ALTERNATE THE SCHEDULE AFTER CERTIFICATION AND APPROVAL OF BILLING BY THE ARCHITECT. THE OWNER MAY ALSO MAKE OTHER BILLING AND/OR COST ALLOCATIONS, IF THE PROJECT IS AVAILABLE FROM THE OWNER AT THE OFFICES OF

OR HIS DESIGNATED AGENT SHALL PROVIDE THIS WRITTEN DESCRIPTION ON REQUEST

- ROOF PLAN & DETAILS
A-2.1

DEVELOPER:
CHARLES COMPANY
9034 W. SUNSET BLVD.
WEST HOLLYWOOD
CA 90069
TEL (310) 247-0900
FAX (310) 247-1525

cvs pharmacy
STORE #4524
909 S. ATLANTIC BLVD
LOS ANGELES, CA

design	RKA	
drawn	RKA	
check	RKA	

sheet A-2.1 of job 09151

1/27/2011 3:28:51 PM

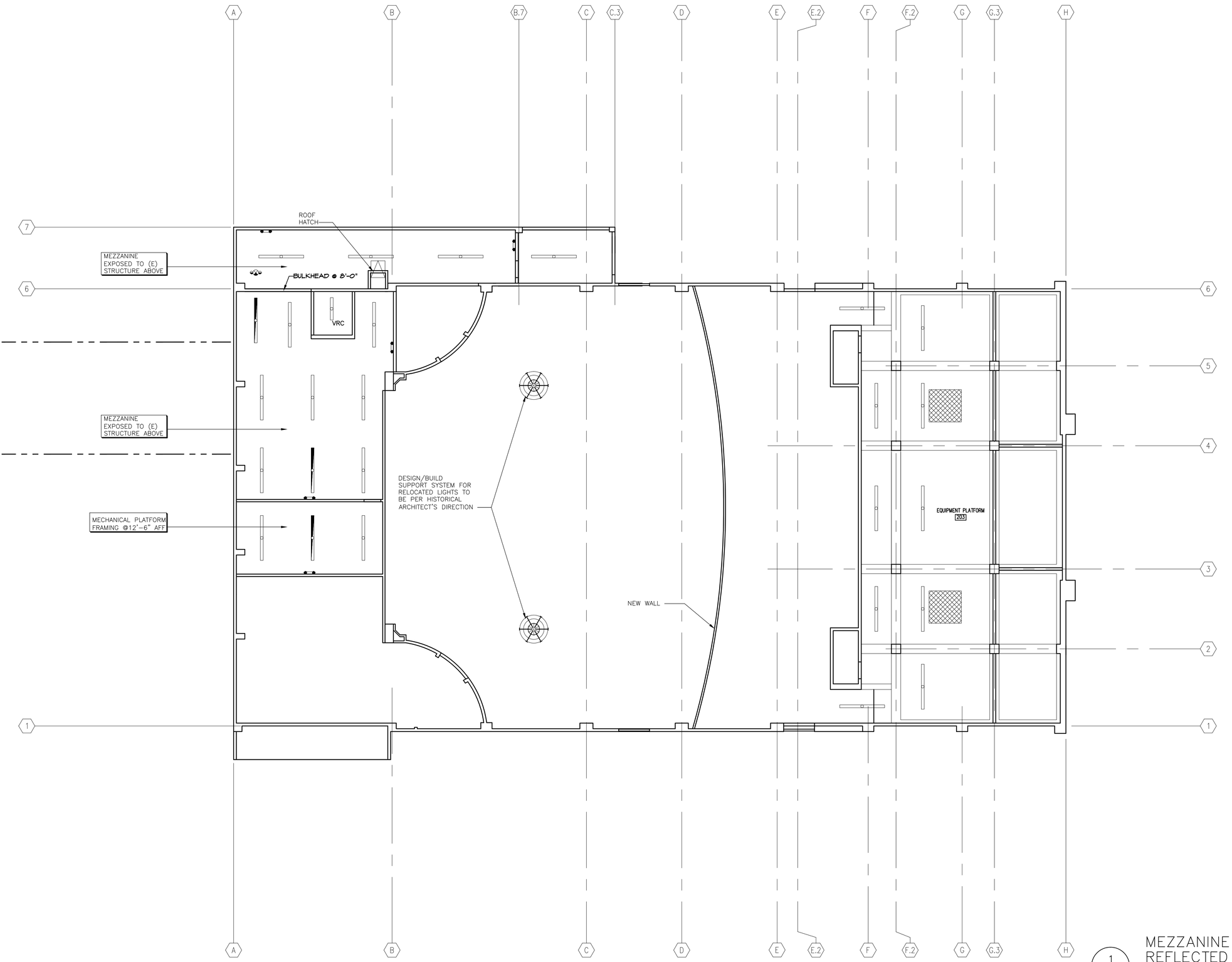

LEGEND: RE: MECHANICAL AND ELECTRICAL DWGS FOR LIGHT FIXTURE, SPRINKLER HEAD, AND DIFFUSER SPECIFICATIONS

- = 2 x 4 RECESSED PARABOLIC LIGHT
- = 2 x 4 RECESSED EMERGENCY PARABOLIC LIGHT
- = NIGHT LIGHT
- = 8' STRIP LIGHT
- = 4' STRIP LIGHT
- = PERIMETER CORNICE FIXTURE
- = RECESSED LIGHT
- = RECESSED LIGHT
- = EMERGENCY LIGHT
- = EXIT LIGHT
- = EXTERIOR WALL LIGHT
- 4' FLUORESCENT — 1.)LITHONIA/MS8ST 3 32 SBL WD (OR APPROVED EQUAL)
- = SUPPLY SLOT AIR DIFFUSER
- = RETURN AIR GRILLE
- = RETURN AIR GRILLE
- = EXHAUST FAN
- = SUPPLY AIR DIFFUSER
- = ROOF HATCH
- = 2x4 LAY-IN GRID CEILING
- = SPEAKER
- E2 = REFER TO EXTERIOR FINISH SCHEDULE ON SHEET A-4.1
- 8' FLUORESCENT — 1.)LITHONIA/TMS8ST 2 32 SBL WD (OR APPROVED EQUAL)

1 / A-3.1.1 MEZZANINE & EQUIPMENT PLATFORM REFLECTED CEILING PLAN

SCALE: 1/8" = 1'-0"

18662 MacArthur Blvd.
Ste.200
Irvine, California 92612
(949) 796-3838
www.rkaa.com

ROBERT KABLICK Architects And Associates, Inc.

LICENSED ARCHITECT CRAIG JOHNSON NO. C12434 STATE OF CALIFORNIA

COPYRIGHT 2001 ALL RIGHTS RESERVED. THIS DRAWING IS AN INSTRUMENT OF SERVICE. IT IS THE PROPERTY OF ROBERT KABLICK ARCHITECTS, AND MAY NOT BE USED, IN WHOLE OR IN PART, WITHOUT OR REPRODUCTION HERE OF USED, WITHOUT WRITTEN PERMISSION OF THE ARCHITECT.

date:	
10/4/10	Bldg. Dept. Submittal
10/15/10	Health Dept. Submittal
1/6/11	Chattel Architecture Submittal
1/27/11	Chattel Architecture Submittal

NOTICE OF ALTERNATE BILLING OR PAYMENT CYCLE: IF THE CONTRACTOR OR VENDOR BELIEVES THAT THE REQUIRE THE SUBMISSION OF BILLINGS OR ESTIMATES IN BILLING CYCLES OTHER THAN THIRTY, THEY SHOULD NOTIFY THE OWNER IN WRITING BEFORE MAKE PAYMENT ON THAT ALTERNATIVE SCHEDULE. THE OWNER MUST ACCEPT OR REJECT THE SCHEDULE AND ESTIMATES IN WRITING WITHIN TWO OF SUCH COMPLAINT. ANY OTHER CYCLE APPLICABLE TO THE OWNER IS AVAILABLE FROM THE OWNER AT THE OFFICES OF

OR HIS DESIGNATED AGENT SHALL PROVIDE THIS WRITTEN DESCRIPTION ON REQUEST.

DEVELOPER:
CHARLES COMPANY
9034 W. SUNSET BLVD.
WEST HOLLYWOOD
CA 90069
TEL (310) 247-0900
FAX (310) 247-1525

CVS pharmacy
STORE #4524
909 S. ATLANTIC BLVD
LOS ANGELES, CA

design RKA
drawn RKA
check RKA

sheet A-3.1.1 of
job 09151

1/27/2011 3:29:34 PM

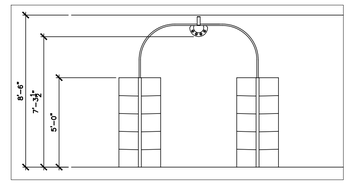

3 / A-3.1 LIGHT SUPPORT DETAIL
SCALE: 1/4" = 1'-0"

LEGEND: RE: MECHANICAL AND ELECTRICAL DWGS FOR LIGHT FIXTURE, SPRINKLER HEAD, AND DIFFUSER SPECIFICATIONS

- = 2 x 4 RECESSED PARABOLIC LIGHT
- = 2 x 4 RECESSED EMERGENCY PARABOLIC LIGHT
- = NIGHT LIGHT
- = 8' STRIP LIGHT
- = 4' STRIP LIGHT
- 4' FLUORESCENT 1.)LITHONIA/MS8ST 3 32 SBL WD (OR APPROVED EQUAL)
- = PERIMETER CORNICE FIXTURE
- = RECESSED LIGHT
- = RECESSED LIGHT
- = EMERGENCY LIGHT
- = EXIT LIGHT
- = EXTERIOR WALL LIGHT
- = SUPPLY SLOT AIR DIFFUSER
- = RETURN AIR GRILLE
- = RETURN AIR GRILLE
- = EXHAUST FAN
- = SUPPLY AIR DIFFUSER
- 8' FLUORESCENT 1.)LITHONIA/TMS8ST 2 32 SBL WD (OR APPROVED EQUAL)
- = ROOF HATCH
- = 2x4 LAY-IN GRID CEILING
- = SPEAKER
- (E2) = REFER TO EXTERIOR FINISH SCHEDULE ON SHEET A-4.1

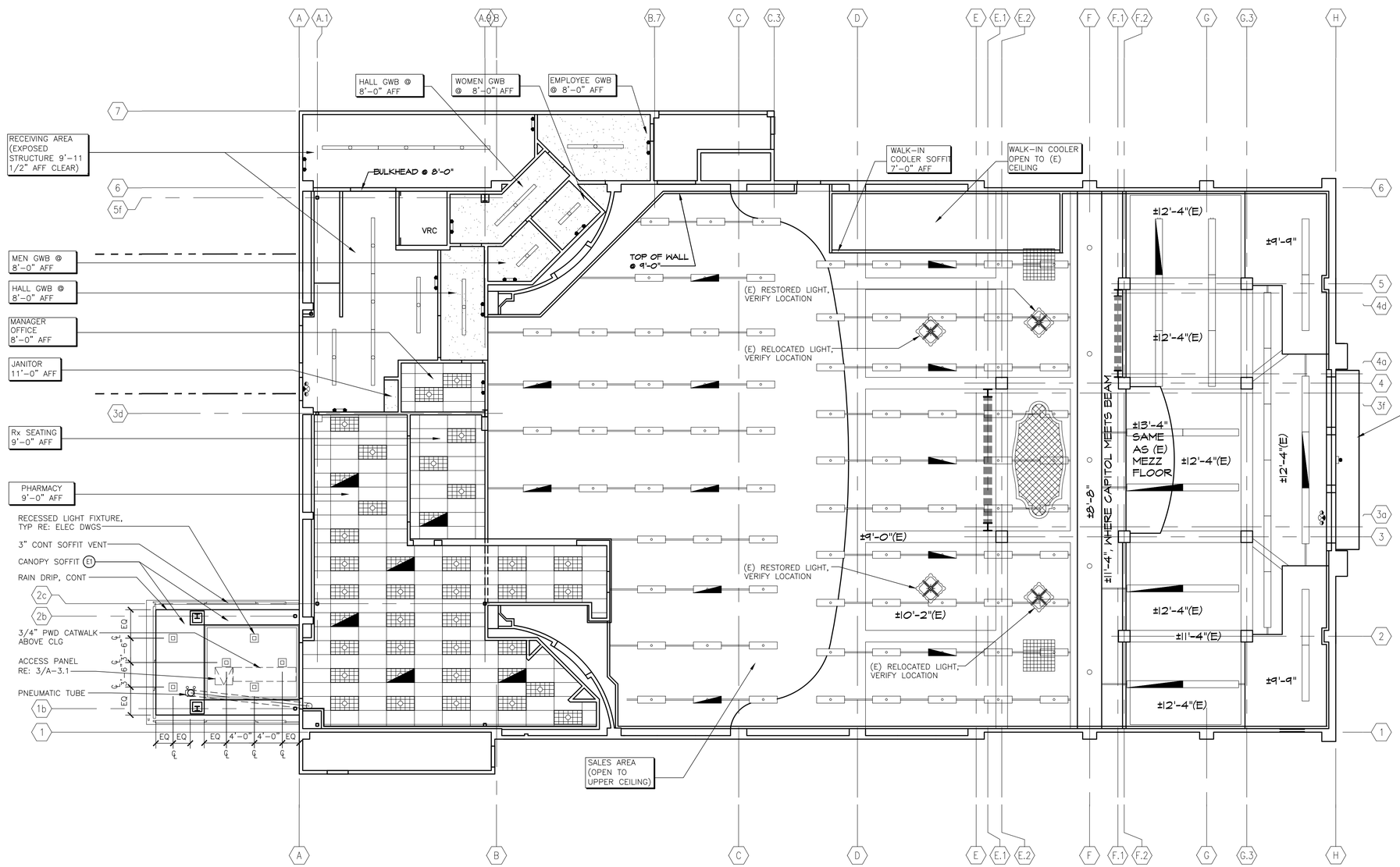

1 / A-3.1 1st FLOOR REFLECTED CEILING PLAN
SCALE: 1/8" = 1'-0"

18662 MacArthur Blvd.
Ste.200
Irvine, California 92612
(949) 796-3838
www.rka.com

ROBERT KABLECK Architects And Associates, Inc.

LICENSED ARCHITECT CRAIG JOHNSON NO. C12434 STATE OF CALIFORNIA

COPYRIGHT 2007 ALL RIGHTS RESERVED. THESE DRAWINGS AND SPECIFICATIONS AND THE IDEAS AND DESIGNS IN ANY INSTRUMENT OF SERVICE, IT IS THE PROPERTY OF ROBERT KABLECK ARCHITECTS, AND ARE NOT TO BE USED IN WHOLE OR IN PART WITHOUT THE REPRODUCTION HERE OF USED WITHOUT WRITTEN PERMISSION OF THE ARCHITECT.

date:	
10/4/10	Bldg. Dept. Submittal
10/15/10	Health Dept. Submittal
1/6/11	Chattel Architecture Submittal
1/27/11	Chattel Architecture Submittal

NOTICE OF ALTERNATE BILLING OR PAYMENT CYCLE: THIS CONTRACT MAY BE SUBJECT TO A LAW THAT REQUIRES THE SUBMISSION OF BILLING OR PAYMENT ON SOME ALTERNATIVE CYCLE. THE SUBMITTAL BILLING CYCLE ALLOWS THE OWNER TO MAKE PAYMENT ON SOME ALTERNATIVE SCHEDULE. THE ALTERNATIVE CYCLE MAY BE DIFFERENT FOR PAYMENT AND DEMAND, IN WRITTEN DESIGN FOR AN ALTERNATE OTHER BILLING AND/OR CYCLE APPLICABLE TO THE PROJECT IS AVAILABLE FROM THE OWNER AT THE OFFICES OF

OR HIS DESIGNATED AGENT SHALL PROVIDE THIS WRITTEN DESCRIPTION ON REQUEST.

DEVELOPER:
CHARLES COMPANY
9034 W. SUNSET BLVD.
WEST HOLLYWOOD
CA 90069
TEL (310) 247-0900
FAX (310) 247-1525

cvs pharmacy
STORE #4524
909 S. ATLANTIC BLVD
LOS ANGELES, CA

design RKA	drawn RKA	check RKA

sheet A-3.1 of job 09151

1/27/2011 3:31:48 PM

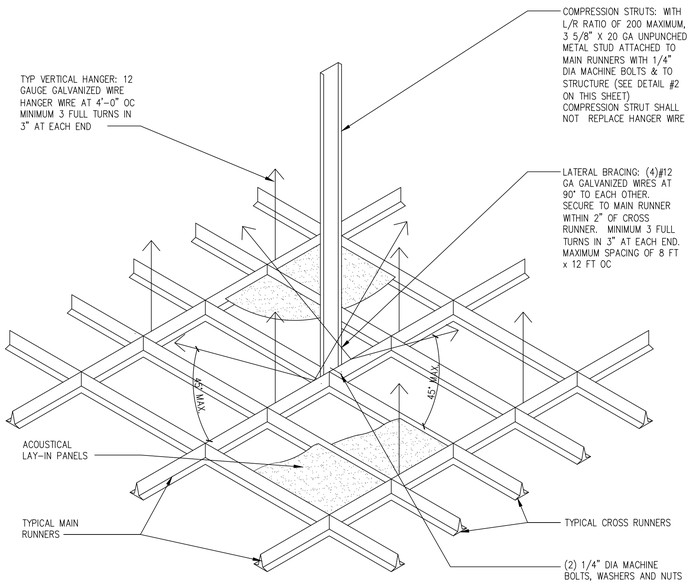

1 A-3.2 SUSPENDED ACOUSTICAL CEILING SYSTEM
SCALE: 1/2" = 1'-0"

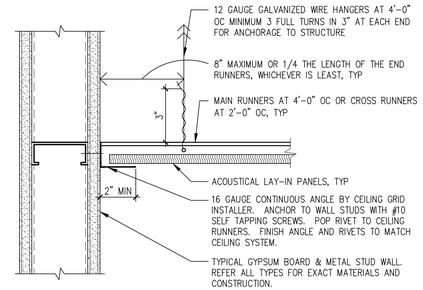

2 A-3.2 CEILING SYSTEM SECTION @ RESTRAINED PERIMETER
SCALE: 3" = 1'-0"

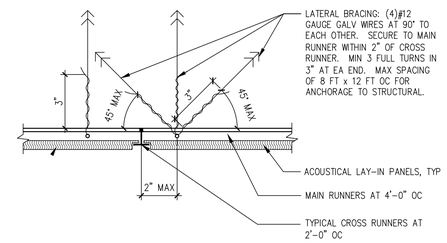

3 A-3.2 CEILING SYSTEM SECTION TYPICAL MIDDLE AREA
SCALE: 3" = 1'-0"

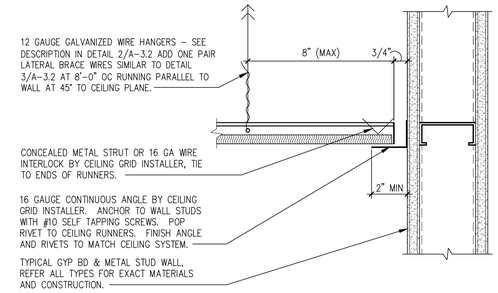

4 A-3.2 CEILING SYSTEM SECTION @ UNRESTRAINED PERIMETER
SCALE: 3" = 1'-0"

NOTE:

DESIGN AND INSTALLATION OF SUSPENDED CEILING SYSTEM TO COMPLY WITH:
2007 CBC SECTIONS 803.9.1.1 AND 1613.1
ASTM C 635 AND ASTM C 636
ASCE 7-05, SECTION 13.5.6

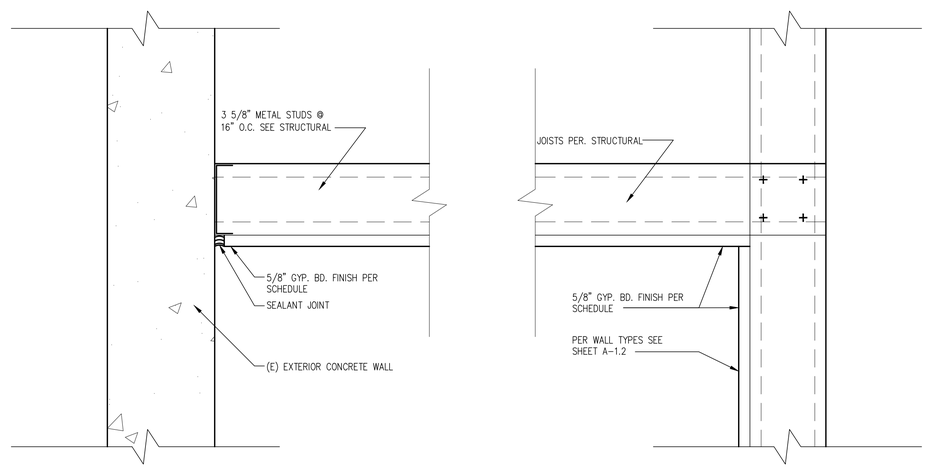

5 A-3.2 FRAMED GYP. BD. CLG.
SCALE: 3" = 1'-0"

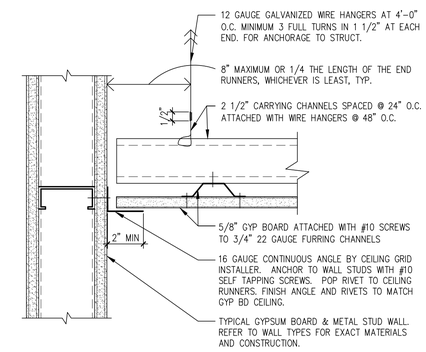

6 A-3.2 GYP BD CEILING SECTION AT RESTRAINED PERIMETER
SCALE: 3" = 1'-0"

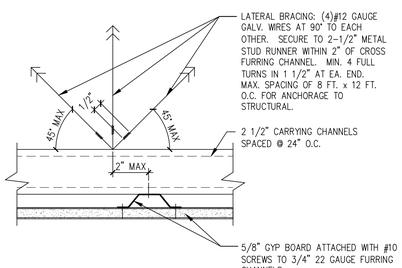

7 A-3.2 GYP BD CEILING SECTION AT TYPICAL MIDDLE AREA
SCALE: 3" = 1'-0"

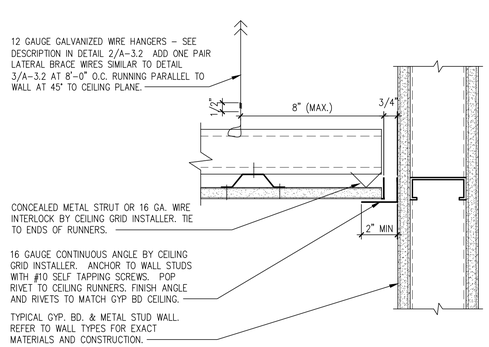

8 A-3.2 GYP BD CEILING SECTION AT UNRESTRAINED PERIMETER
SCALE: 3" = 1'-0"

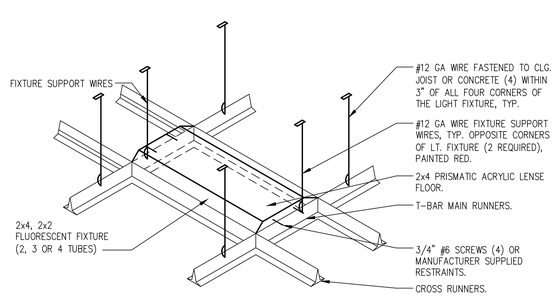

9 A-3.2 LIGHTING FIXTURE SUPPORT
SCALE: 1/2" = 1'-0"

READ THE FOLLOWING NOTE AND DELETE AFTER READING AND COMPLYING.

Architect shall verify seismic zone requirement and include detail #10 if required.
In seismic design category D, E & F for ceiling areas exceeding 2,500 sq.ft., a seismic separation joint that breaks the ceiling up into areas not exceeding 2,500 sq.ft. shall be provided.

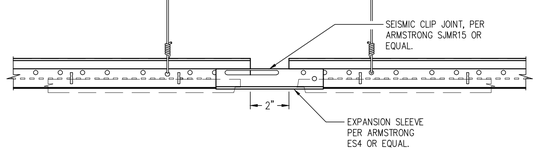

10 A-3.2 SEISMIC SEPARATION JOINT
SCALE: 3" = 1'-0"

A-3.2 CEILING DETAILS

ROBERT KABICEK Architects And Associates, Inc.
18662 MacArthur Blvd. Ste.200
Irvine, California 92612
(949) 796-3838
www.rka.com

LICENSED ARCHITECT CRAIG JOHNSON NO. C12434 STATE OF CALIFORNIA

COPYRIGHT 2001 ALL RIGHTS RESERVED. ROBERT KABICEK & ASSOCIATES, INC. THIS DRAWING IS AN INSTRUMENT OF SERVICE. IT IS THE PROPERTY OF ROBERT KABICEK ARCHITECTS, INC. AND MAY NOT BE USED IN WHOLE OR PART OR REPRODUCTION HERE OF USED WITHOUT WRITTEN PERMISSION OF THE ARCHITECT.

date:	
10/4/10	Bldg. Dept. Submittal
10/15/10	Health Dept. Submittal
1/6/11	Chattel Architecture Submittal
1/27/11	Chattel Architecture Submittal

NOTICE OF ALTERNATE BILLING OR PAYMENT CYCLE: THIS CONTRACT MAY ALLOW THE OWNER TO REQUIRE THE SUBMISSION OF BILLINGS ON A MONTHLY BASIS, RATHER THAN ON THE THIRTY-DAYS TIME CONSTRUCT MAY ALLOW THE OWNER TO MAKE PAYMENT ON SOME ALTERNATIVE SCHEDULE BASED ON PERCENTAGE OF COMPLETION, MILESTONES, AND ESTIMATES. A WRITTEN DESCRIPTION OF SUCH OTHER BILLING AND/OR CYCLE APPLICABLE TO THE CONTRACT IS AVAILABLE FROM THE OWNER AT THE OFFICES OF

OR HIS DESIGNATED AGENT SHALL PROVIDE THIS WRITTEN DESCRIPTION ON REQUEST.

DEVELOPER:
CHARLES COMPANY
9034 W. SUNSET BLVD
WEST HOLLYWOOD
CA 90069
TEL (310) 247-0900
FAX (310) 247-1525

cvs pharmacy
STORE #4524
909 S. ATLANTIC BLVD
LOS ANGELES, CA

design	RKA	drawn	RKA	check	RKA

sheet A-3.2 of job 09151

1/27/2011 3:32:28 PM

1/27/2011 3:34:11 PM

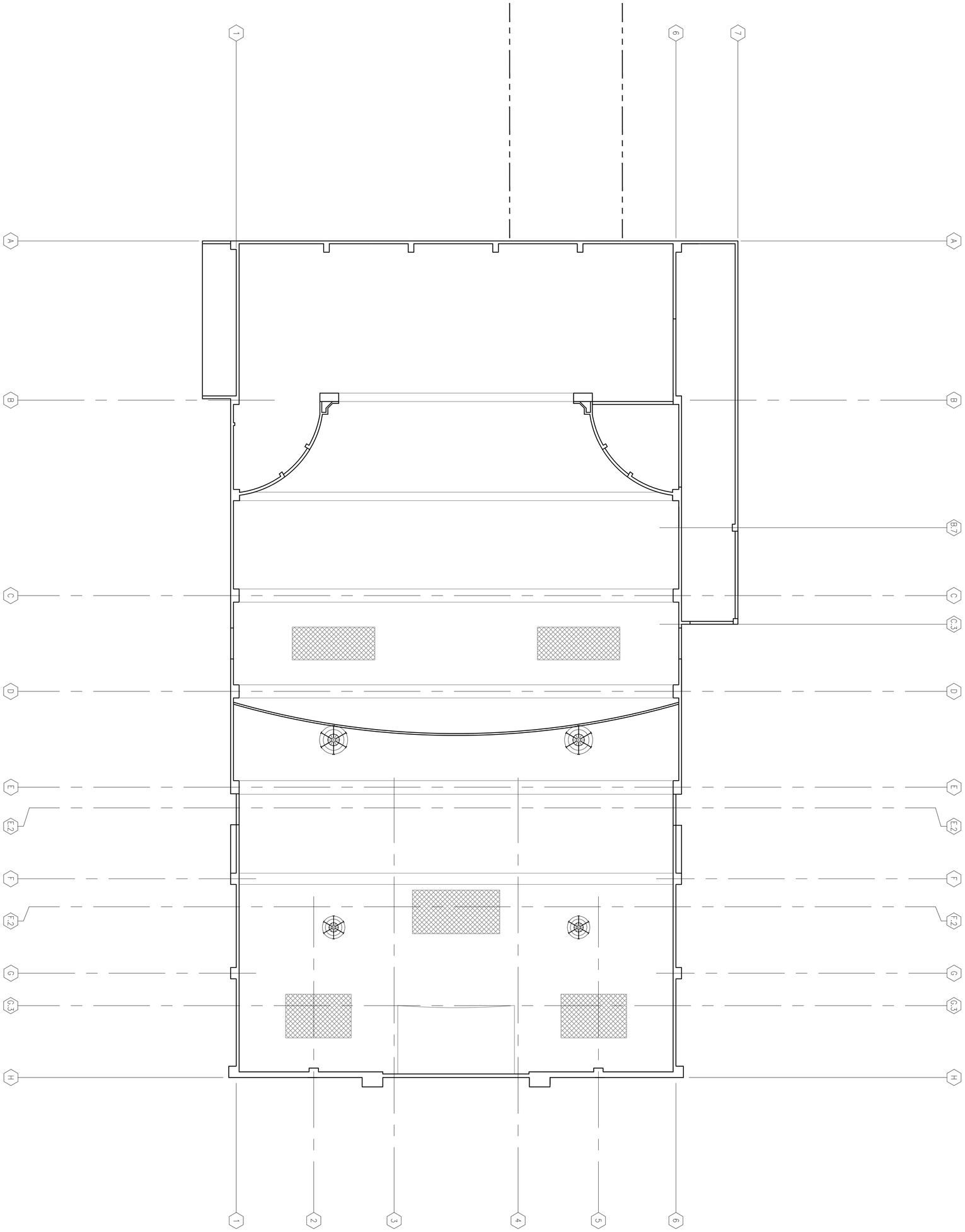

1 A-3.1 UPPER REFLECTED CEILING PLAN

SCALE: 1/8" = 1'-0"

sheet A-3.3 of job 09151

design RKA
drawn RKA
check RKA

CVS pharmacy
STORE #4524
909 S. ATLANTIC BLVD
LOS ANGELES, CA

DEVELOPER:
CHARLES COMPANY
9034 W. SUNSET BLVD.
WEST HOLLYWOOD
CA 90069
TEL (310) 247-0900
FAX (310) 247-1525

date:	
10/4/10	Bldg. Dept. Submittal
10/15/10	Health Dept. Submittal
1/6/11	Chattel Architecture Submittal
1/27/11	Chattel Architecture Submittal

LICENSED ARCHITECT CRAIG JOHNSON NO. C12434 STATE OF CALIFORNIA 1-21-2010

RKAA ROBERT KUBICEK Architects And Associates, Inc.

18662 MacArthur Blvd.
Ste.200
Irvine, California 92612
(949) 798-3838
www.rkaa.com

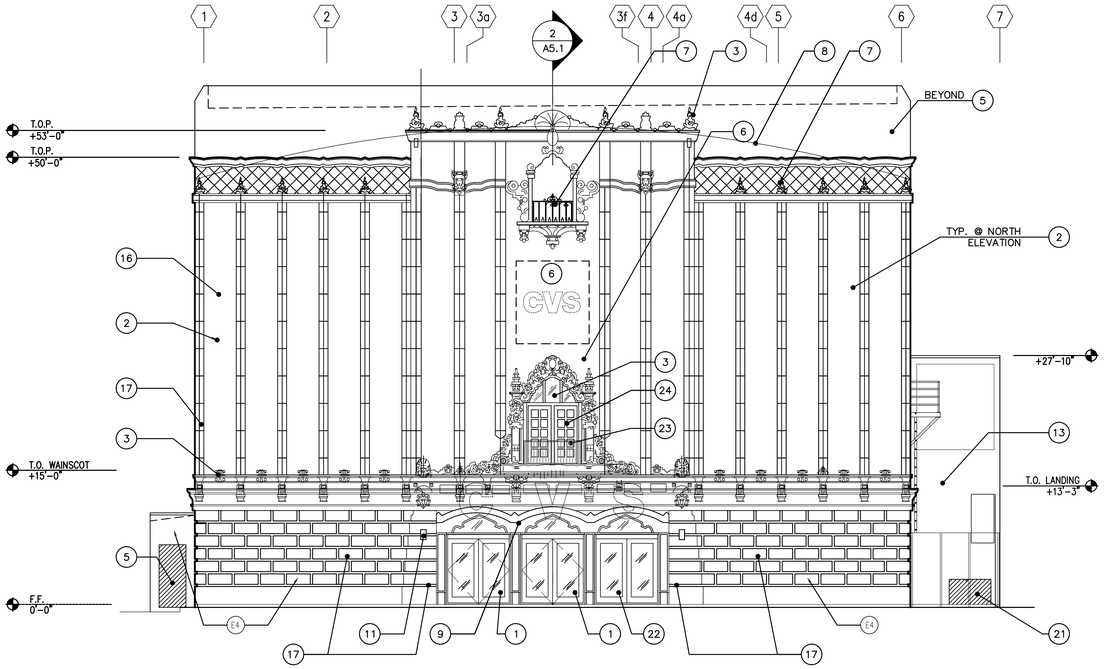

NOTE:
SIGNAGE UNDER SEPARATE PERMIT

2 / A-4.1 NORTH ELEVATION
SCALE: 1/8" = 1'-0"

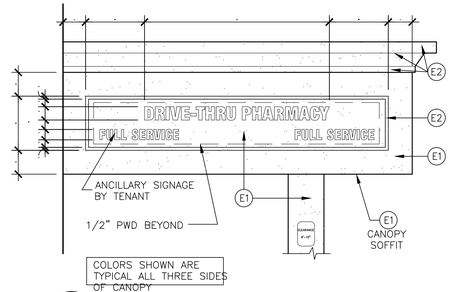

7 / A-4.1 ENLARGED SIGN ELEVATION
SCALE: 1/4" = 1'-0"

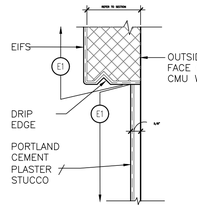

6 / A-4.1 REVEAL DETAIL
SCALE: 3" = 1'-0"

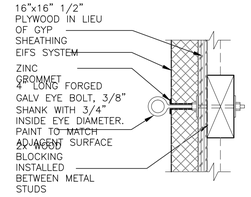

5 / A-4.1 EYE-BOLT DETAIL
SCALE: 3" = 1'-0"

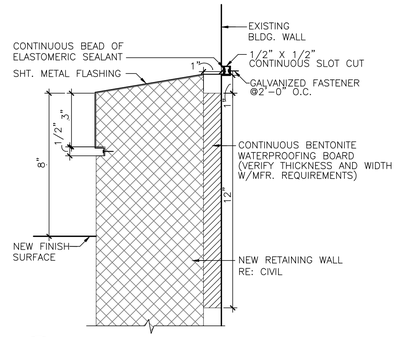

8 / A-4.1 RETAINING WALL DETAIL
SCALE: 3" = 1'-0"

EXTERIOR FINISH SCHEDULE

TAG	MATERIAL / DESCRIPTION	MFR.	STYLE/ CAT. NO.	COLOR	NOTES
E1	EIFS/STUCCO	STO LOTUSAN SYSTEM	191 STOLIT LOTUSAN 1.5	NA01-0048 PALE YELLOW	RE: SPECIFICATION
E2	EIFS	STO LOTUSAN SYSTEM	191 STOLIT LOTUSAN 1.5	NA00-0047 TERRA COTTA	RE: SPECIFICATION
E3	CMU BLOCK		PRECISION FACE	NATURAL GREY	MORTAR COLOR TO MATCH GREY BLOCK
E4	PAINT	BENJAMIN MOORE		PAINT TO MATCH DEW382 FADED GRAY BY DUNN-EDWARDS	
E5	PAINT	BENJAMIN MOORE		MATCH OSHA YELLOW	TYP FOR ALL PIPE BOLLARDS
E6	NOT USED	BENJAMIN MOORE			
E7	NOT USED	BENJAMIN MOORE			
E8	ALUM STOREFRONT	SEE SPECS	SEE SPECS	CLEAR ANODIZED	
E9	ALUM AUTOMATIC DOOR	STANLEY	SEE SPECS	CLEAR ANODIZED	

ELEVATION KEY NOTES

1. ALUMINUM & GLASS DOORS. CONTRACTOR TO MINIMIZE ANY NEW PENETRATIONS INTO EXISTING SURFACES AND PRESERVE THE HISTORIC DOOR TRIM TO THE MAXIMUM EXTENT FEASIBLE. COORDINATE IN FIELD WITH CHATTEL ARCHITECTURE. RE: DOOR & FRAME SCHEDULE /A-7.2
2. (E) FACADE, CLEAN AND PAINT. CLEAN WITH PRESSURIZED WATER USING GENTLEST POSSIBLE MEANS AT LESS THAN 400 PSI.
3. (E) ORNAMENT TO REMAIN AND BE RESTORED.
4. EXISTING SHEET METAL COPING, GUTTERS, AND DOWNSPOUTS. RESTORE AND PAINT
5. EXISTING CONCRETE WALL
6. TENANT SIGNAGE UNDER SEPARATE PERMIT
7. (E) IRON RAILING. TO BE RESTORED
8. (E)ROOF LINE.
9. CANOPY UNDER SEPARATE DESIGN/BUILD PERMIT. NEW CANOPY SHALL REPLICATE THE OUTWARD APPEARANCE OF THE EXISTING HISTORIC CANOPY, TO BE COORDINATED WITH CHATTEL ARCHITECTURE, THE CHARLES CO., CVS AND THE COUNTY OF L.A. BUILDING DEPARTMENT. NEW CANOPY TO ACCOMMODATE TENANT SIGNAGE.
11. WALL-MOUNTED LIGHT. SEE ELECTRICAL DRAWING.
12. (E) PIPE RAILING TO REMAIN, VERIFY CONDITION, REPAIR AND PAINT
13. NEW SHOP FABRICATED METAL LADDER, SECURITY DOOR, LANDING & GUARDRAIL. RE: 3/A-4.2
14. PIPE BOLLARD. SEE DETAIL. 9 / A-5.2
15. (E) ROOF TO REMAIN
16. STEEL DOORS & FRAME, PAINT 8 / A-7.1
17. (E) CAST STONE AND PLASTER EXTERIOR SHELL TO BE RESTORED AND REPAIRED AS REQUIRED.
18. (E) OPENING TO REMAIN AS IS FOR RETURN AIR VENT
19. SHEET METAL LOUVERED GRILLE, PRE-FINISHED
20. SHEET METAL VENT TO REMAIN, VERIFY IF SECURE IN PLACE, REPAIR AND PAINT
21. RECESSED 4" THICK CONCRETE (1" REVEAL) CENTERED AT EXISTING OPENING. 6 / A-1.4
22. NEW ALUMINUM FRAME GLAZING RE: DOOR & FRAME SCHEDULE /A-7.2
23. NEW WROUGHT IRON RAILING TO BE RESTORED TO MATCH HISTORICAL PHOTOS
24. NEW WOOD DOORS WITH GLASS PANELS TO BE RESTORED TO MATCH HISTORICAL PHOTOS
25. EXISTING 3-LIGHT LUNETTE AND FRAME TO BE RESTORED WITH GLASS TO MATCH LIGHTS IN NEW WOOD DOORS BELOW

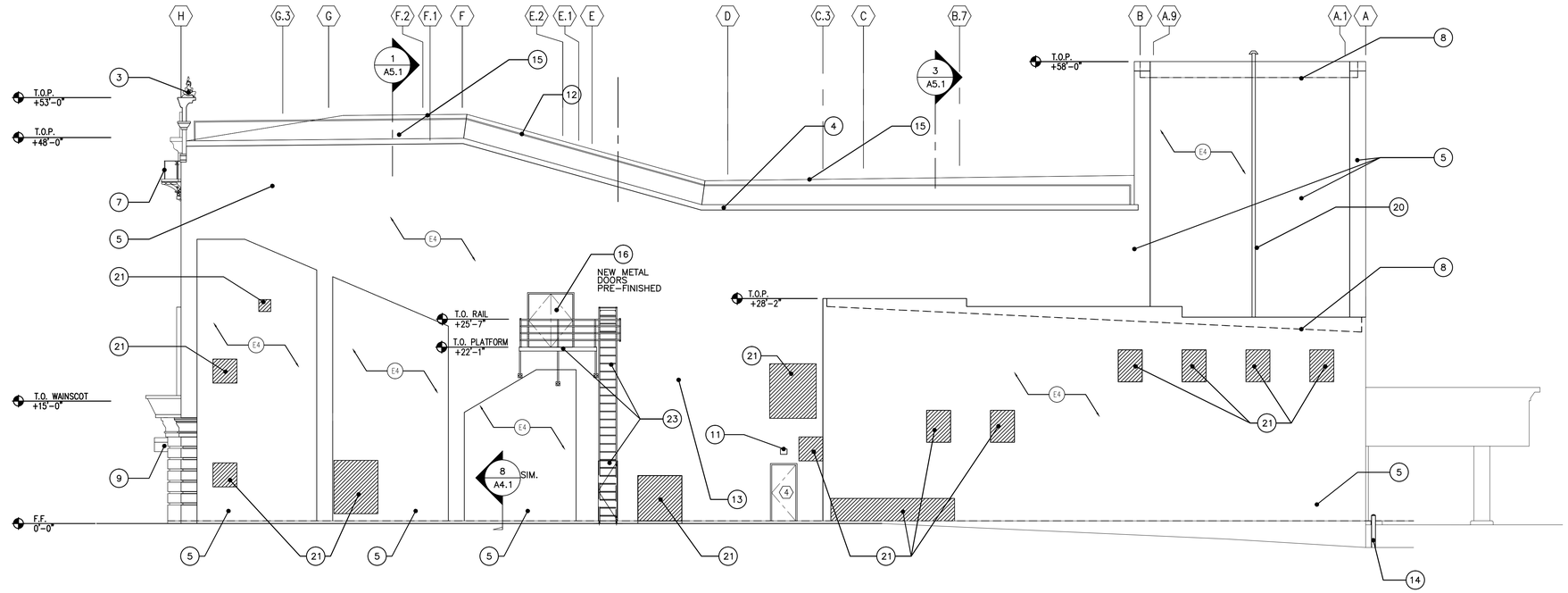

1 / A-4.1 WEST ELEVATION
SCALE: 1/8" = 1'-0"

MITIGATION MEASURE 3.2.6: DECORATIVE FEATURES, INCLUDING ORNAMENT AND OPENINGS ON THE NORTH ELEVATION SHALL BE RETAINED AND SHALL BE CLEANED AND MAINTAINED WITH GENTLEST MEANS POSSIBLE AT LESS THAN 400 PSI, TO BE DETERMINED AFTER INSPECTION AND RECOMMENDATION BY A QUALIFIED MASONRY RESTORATION SPECIALIST.

NOTE: ALL VERTICAL ELEVATIONS OF WALLS, FLOOR PARAPETS AND LANDINGS ARE TO BE CONSIDERED AS +/-, REQUIRING VERIFICATION IN FIELD.

1/28/2011 4:19:01 PM

18662 MacArthur Blvd.
Ste.200
Irvine, California 92612
(949) 796-3838
www.rkaa.com

ROBERT KABLECK
Architects And Associates, Inc.

LICENSED ARCHITECT
CRAIG JOHNSON
NO. C12434
STATE OF CALIFORNIA

COPYRIGHT 2007 ALL RIGHTS RESERVED.
THIS DOCUMENT IS THE PROPERTY OF ROBERT KABLECK. THIS DRAWING IS AN INSTRUMENT OF SERVICE, IT IS THE PROPERTY OF ROBERT KABLECK ARCHITECTS, AND MUST BE RETURNED UPON REQUEST. REPRODUCTION, REUSE OR USE WITHOUT WRITTEN PERMISSION OF THE ARCHITECT.

date:	
10/4/10	Bldg. Dept. Submittal
10/15/10	Health Dept. Submittal
1/6/11	Chattel Architecture Submittal
1/27/11	Chattel Architecture Submittal

NOTICE OF ALTERNATE BILLING OR PAYMENT CYCLE: THIS CONTRACT MAY ALLOW THE OWNER TO DECLARE THE SUBMISSION OF BILLINGS ON A DATE OTHER THAN THE 15TH OF EACH MONTH, OR TO DELAY THE CONTRACT MAY ALLOW THE OWNER TO MAKE PAYMENT ON SOME ALTERNATIVE CYCLE. THE CONTRACTOR MAY ALSO BE REQUIRED TO PROVIDE AND SUBMIT A WRITTEN DESCRIPTION OF SUCH BILLING CYCLES AND/OR CYCLE APPLICABLE TO THE PRODUCT(S) AVAILABLE FROM THE OWNER AT THE OFFICES OF

OR HIS DESIGNATED AGENT SHALL PROVIDE THIS WRITTEN DESCRIPTION ON REQUEST.

DEVELOPER:
CHARLES COMPANY
9034 W. SUNSET BLVD.
WEST HOLLYWOOD
CA 90069
TEL (310) 247-0900
FAX (310) 247-1525

cvs pharmacy
STORE #4524
909 S. ATLANTIC BLVD
LOS ANGELES, CA

design	RKA
drawn	RKA
check	RKA

sheet **A-4.1** of job 09151

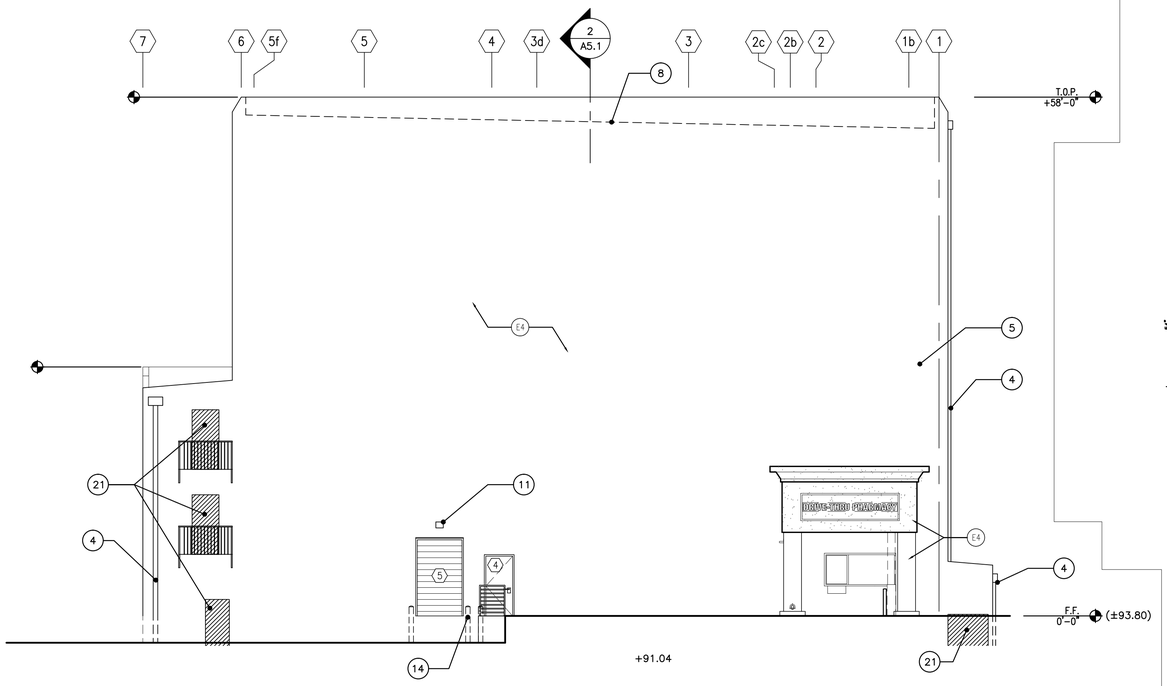

NOTE:
SIGNAGE UNDER SEPARATE PERMIT

2 / A-4.2 SOUTH ELEVATION
SCALE: 1/8" = 1'-0"

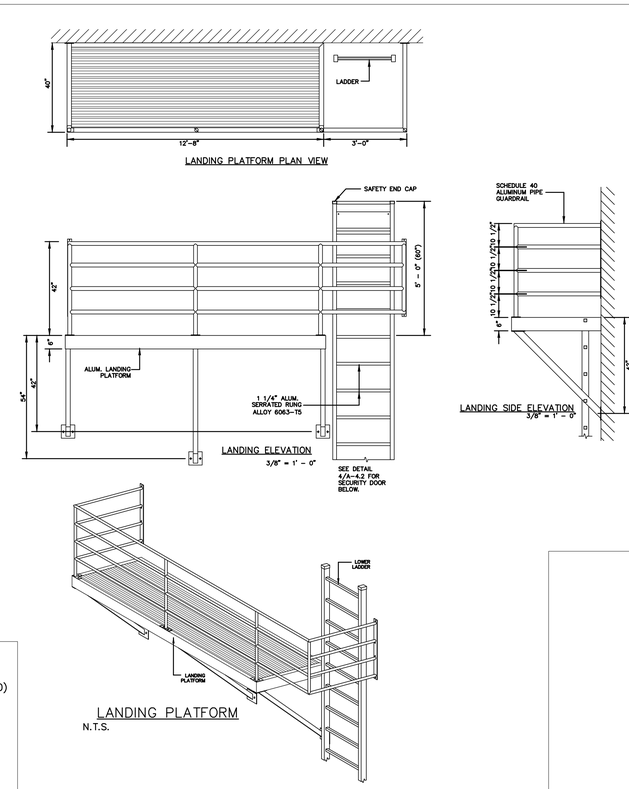

3 / A-4.2 LADDER, LANDING, RAILING & SECURITY DOOR

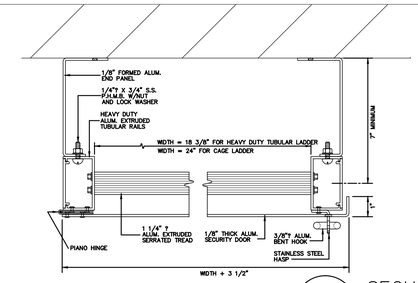

6 / A-4.2 SECURITY DOOR TOP VIEW
3" = 1' - 0"

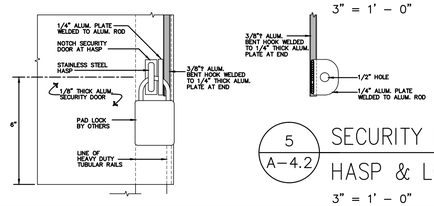

5 / A-4.2 SECURITY DOOR HASP & LOCK
3" = 1' - 0"

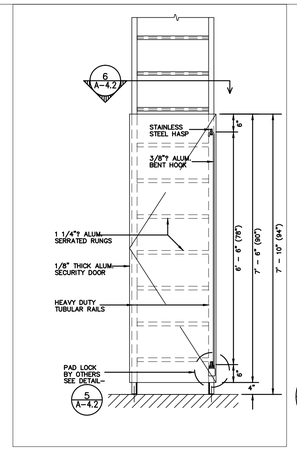

4 / A-4.2 SECURITY DOOR FRONT ELEVATION
1/2" = 1' - 0"

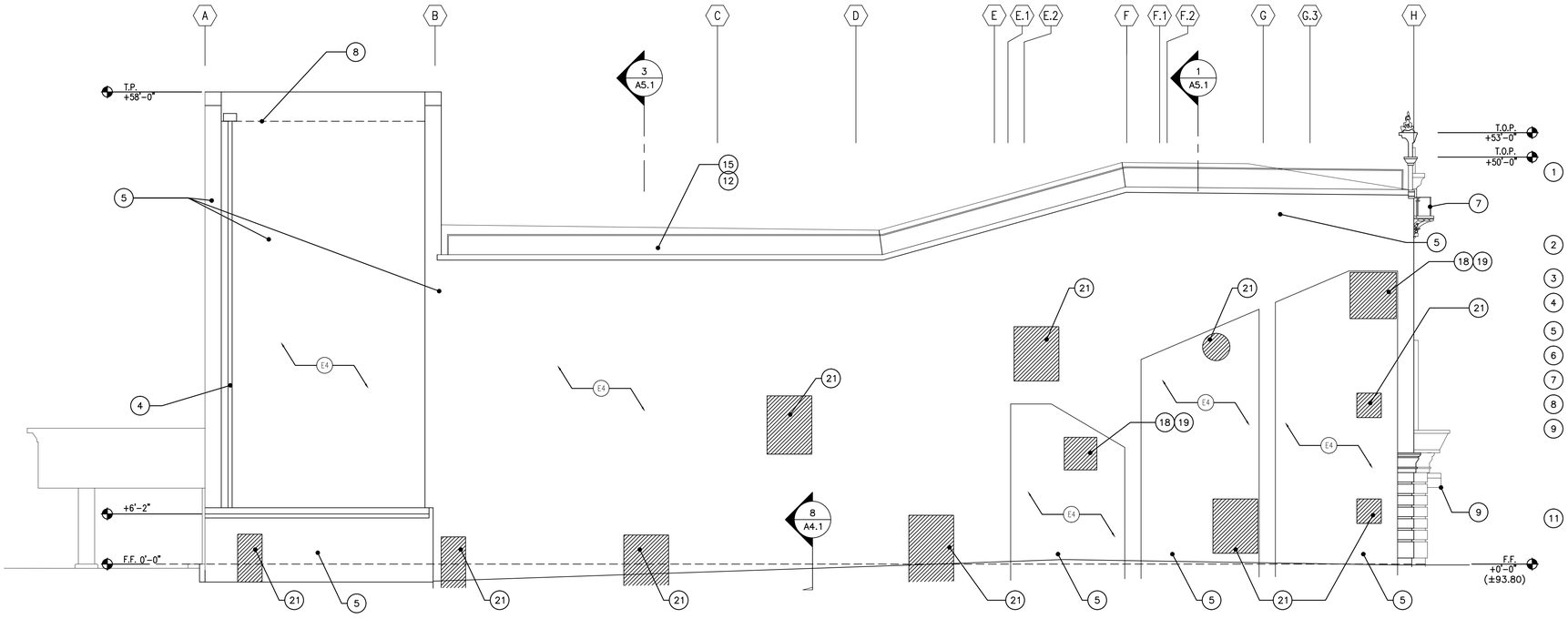

1 / A-4.2 EAST ELEVATION
SCALE: 1/8" = 1'-0"

ELEVATION KEY NOTES

1. ALUMINUM & GLASS DOORS. CONTRACTOR TO MINIMIZE ANY NEW PENETRATIONS INTO EXISTING SURFACES AND PRESERVE THE HISTORIC DOOR TRIM TO THE MAXIMUM EXTENT FEASIBLE. COORDINATE IN FIELD WITH CHATTEL ARCHITECTURE. RE: DOOR & FRAME SCHEDULE /A-7.2
2. (E) FACADE, SANDBLAST AND PAINT USING GENTLEST POSSIBLE MEANS AT LESS THAN 400 PSI.
3. (E) FAUX ORNAMENT TO REMAIN AND BE RESTORED.
4. EXISTING SHEET METAL COPING, GUTTERS, AND DOWNSPOUTS. RESTORE AND PAINT
5. EXISTING CONCRETE WALL
6. TENANT SIGNAGE UNDER SEPARATE PERMIT
7. (E) IRON RAILING. TO BE RESTORED
8. (E)ROOF LINE.
9. CANOPY UNDER SEPARATE DESIGN/BUILD PERMIT. NEW CANOPY SHALL REPLICATE THE OUTWARD APPEARANCE OF THE EXISTING HISTORIC CANOPY, TO BE COORDINATED WITH CHATTEL ARCHITECTURE, THE CHARLES CO., CVS AND THE COUNTY OF L.A. BUILDING DEPARTMENT. NEW CANOPY TO ACCOMMODATE TENANT SIGNAGE.
11. WALL-MOUNTED LIGHT. SEE ELECTRICAL DRAWING.
12. (E) PIPE RAILING TO REMAIN, VERIFY CONDITION, REPAIR AND PAINT
13. NEW SHOP FABRICATED METAL LADDER, SECURITY DOOR, LANDING & GUARDRAIL. RE: 3/A-4.2
14. PIPE BOLLARD. SEE DETAIL 9/A-5.2
15. (E) ROOF TO REMAIN
16. STEEL DOORS & FRAME, PAINT 8/A-7.1
17. (E) CAST STONE AND PLASTER EXTERIOR SHELL TO BE RESTORED AND REPAIRED AS REQUIRED.
18. (E) OPENING TO REMAIN AS IS FOR SHEET METAL GRILLE
19. SHEET METAL GRILLE, PRE-FINISHED
20. SHEET METAL VENT TO REMAIN, VERIFY IF SECURE IN PLACE, REPAIR AND PAINT
21. RECESSED 4" THICK CONCRETE (1" REVEAL) 6/A-1.4 CENTERED AT EXISTING OPENING.
22. NEW ALUMINUM FRAME GLAZING RE: DOOR & FRAME SCHEDULE /A-7.2

MITIGATION MEASURE 3.2.6: DECORATIVE FEATURES, INCLUDING ORNAMENT AND OPENINGS ON THE NORTH ELEVATION SHALL BE RETAINED AND SHALL BE CLEANED AND MAINTAINED WITH GENTLEST MEANS POSSIBLE AT LESS THAN 400 PSI, TO BE DETERMINED AFTER INSPECTION AND RECOMMENDATION BY A QUALIFIED MASONRY RESTORATION SPECIALIST.

NOTE: ALL VERTICAL ELEVATIONS OF WALLS, FLOOR PARAPETS AND LANDINGS ARE TO BE CONSIDERED AS +/-, REQUIRING VERIFICATION IN FIELD.

NOTE: SEE SHEET A-4.1 FOR "EXTERIOR FINISH SCHEDULE"

18662 MacArthur Blvd.
Ste.200
Irvine, California 92612
(949) 796-3838
www.rka.com

ROBERT KABICEK Architects And Associates, Inc.

LICENSED ARCHITECT
CRAIG JOHNSON
NO. C12434
STATE OF CALIFORNIA

COPYRIGHT 2001 ALL RIGHTS RESERVED.
THIS DOCUMENT IS THE PROPERTY OF ROBERT KABICEK. THIS DRAWING IS AN INSTRUMENT OF SERVICE, IT IS THE PROPERTY OF ROBERT KABICEK ARCHITECTS, AND MUST BE RETURNED UPON REQUEST. COPYING OR REPRODUCTION HERE OF USED WITHOUT WRITTEN PERMISSION OF THE ARCHITECT.

date:	
10/4/10	Bldg. Dept. Submittal
10/15/10	Health Dept. Submittal
1/6/11	Chattel Architecture Submittal
1/27/11	Chattel Architecture Submittal

NOTICE OF ALTERNATE BILLING OR PAYMENT CYCLE: THIS CONTRACT MAY ALLOW THE OWNER TO ALTERNATE BILLING OR PAYMENT CYCLE FROM ESTIMATES IN BILLING CYCLES SOMEWHERE NOW, THIRTY, SIXTY, NINETY DAYS OR MORE. THE OWNER MAY ALSO HAVE THE CONTRACT AS A LOAN FOR OWNER AFTER CERTIFICATION AND APPROVAL OF BILLING. THE OWNER MAY ALSO ALTERNATE BILLING OR PAYMENT OTHER BILLING AND/OR CYCLE APPLICABLE. IF THE PROJECT IS AVAILABLE FROM THE OWNER AT THE OFFICES OF

OR HIS DESIGNATED AGENT SHALL PROVIDE THIS WRITTEN DESCRIPTION ON REQUEST

DEVELOPER:
CHARLES COMPANY
9034 W. SUNSET BLVD.
WEST HOLLYWOOD
CA 90069
TEL (310) 247-0900
FAX (310) 247-1525

cvs pharmacy
STORE #4524
909 S. ATLANTIC BLVD
LOS ANGELES, CA

design	RKA	
drawn	RKA	
check	RKA	

sheet A-4.2 of job 09151

1/27/2011 6:19:27 PM

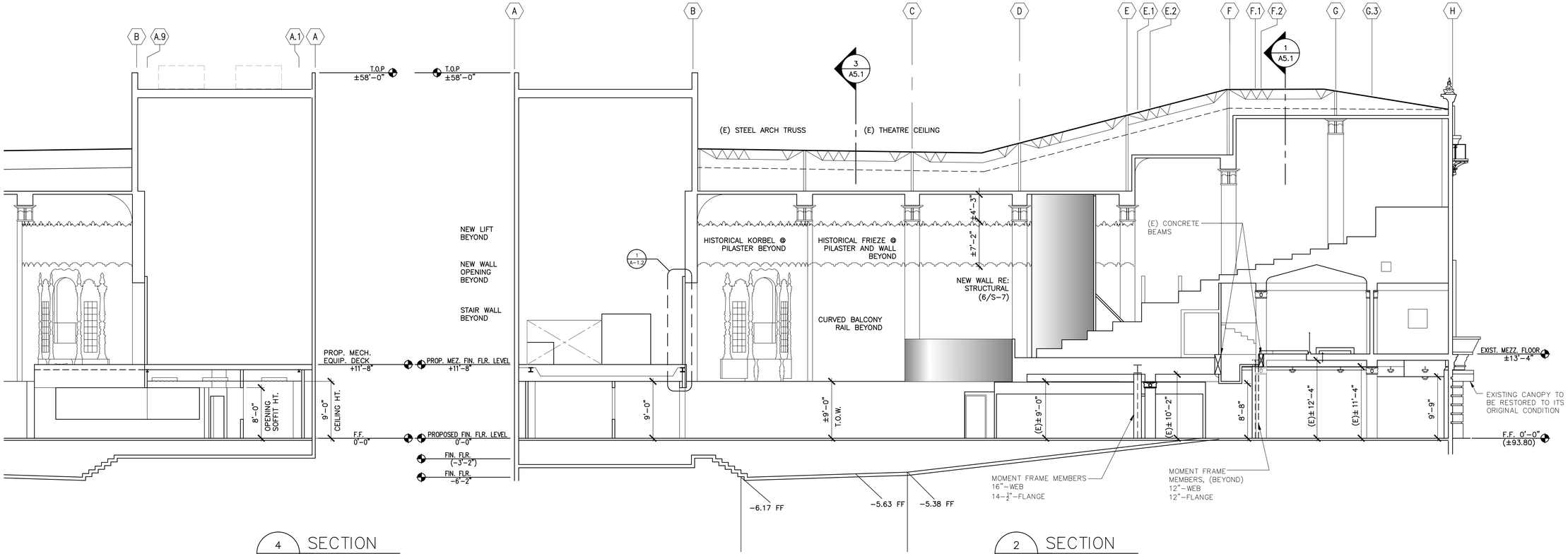

4 SECTION
A-5.1 SCALE: 1/8" = 1'-0"

2 SECTION
A-5.1 SCALE: 1/8" = 1'-0"

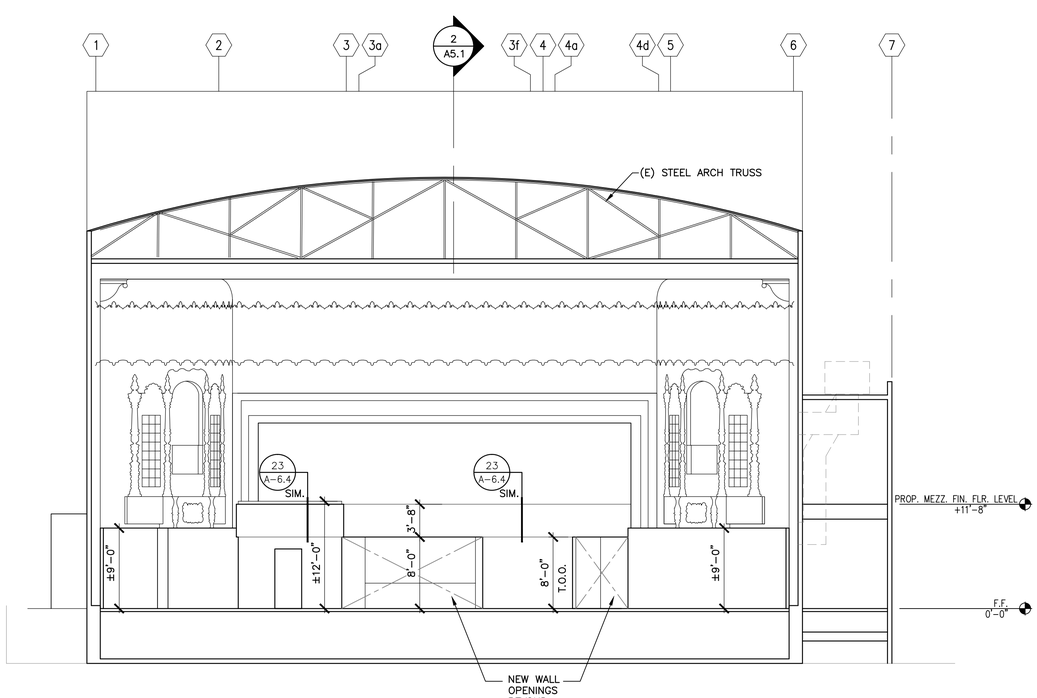

3 SECTION
A-5.1 SCALE: 1/8" = 1'-0"

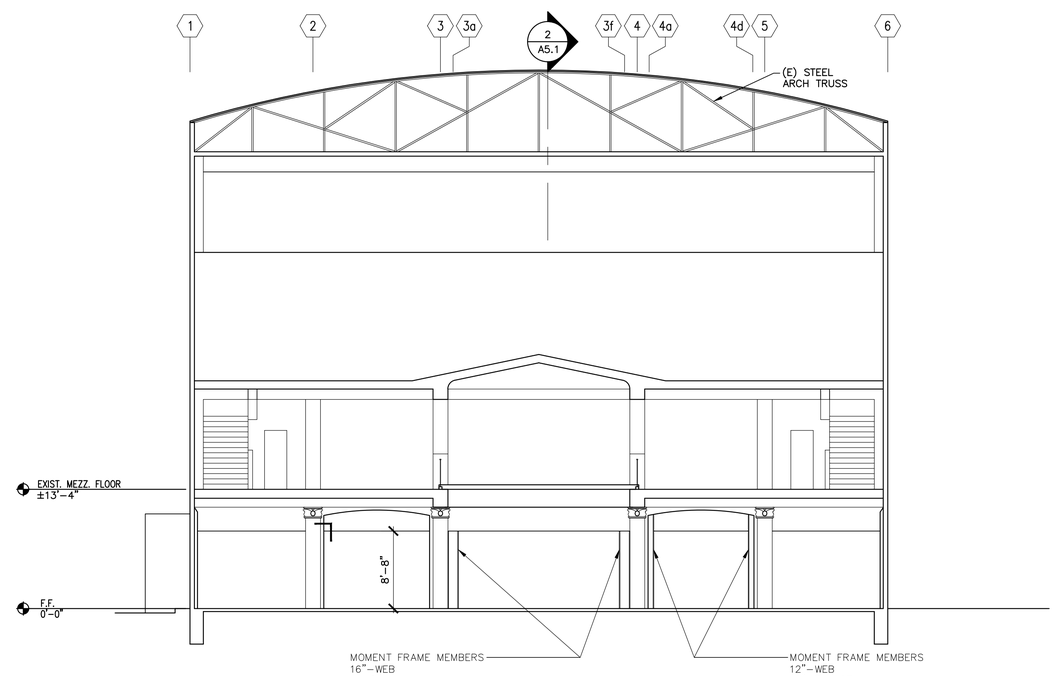

1 SECTION
A-5.1 SCALE: 1/8" = 1'-0"

1/31/2011 10:45:23 AM

18662 MacArthur Blvd.
Ste.200
Irvine, California 92612
(949) 796-3838
www.rka.com

ROBERT KUBICEK Architects And Associates, Inc.

LICENSED ARCHITECT
CRAIG JOHNSON
NO. C12434
STATE OF CALIFORNIA

COPYRIGHT 2011 ALL RIGHTS RESERVED.
ROBERT KUBICEK ARCHITECTS AND ASSOCIATES, INC.
THIS DRAWING IS AN INSTRUMENT OF SERVICE. IT IS THE PROPERTY OF ROBERT KUBICEK ARCHITECTS, AND MAY NOT BE USED IN WHOLE OR IN PART, WITHOUT OR REPRODUCTION HERE OF USED, WITHOUT WRITTEN PERMISSION OF THE ARCHITECT.

date:	
10/4/10	Bldg. Dept. Submittal
10/15/10	Health Dept. Submittal
1/6/11	Chattel Architecture Submittal
1/27/11	Chattel Architecture Submittal

NOTICE OF ALTERNATE BILLING OR PAYMENT CYCLE: NOT CONSTRUCTED ALL SIGNS OF WHICH DO REQUIRE THE SUBMISSION OF BILLINGS ON A MONTHLY BASIS. THE CONTRACTOR, FOR SAFETY, SECURITY, OR OTHER REASONS, MAY ALLOW THE OWNER TO MAKE PAYMENT ON SOME ALTERNATIVE SCHEDULE OR CYCLE, PROVIDED THE ALTERNATIVE IS FAIR AND ESTIMATED. A WRITTEN DESCRIPTION OF THE SIGN OTHER BILLING AND/OR CYCLE APPLICABLE TO THE PROJECT IS AVAILABLE FROM THE OWNER AT THE OFFICES OF

OR HIS DESIGNATED AGENT SHALL PROVIDE THIS WRITTEN DESCRIPTION ON REQUEST.

DEVELOPER:
CHARLES COMPANY
9034 W. SUNSET BLVD.
WEST HOLLYWOOD
CA 90069
TEL (310) 247-0900
FAX (310) 247-1525

cvs pharmacy
STORE #4524
909 S. ATLANTIC BLVD
LOS ANGELES, CA

design RKA
drawn RKA
check RKA

sheet A-5.1
of
job 09151

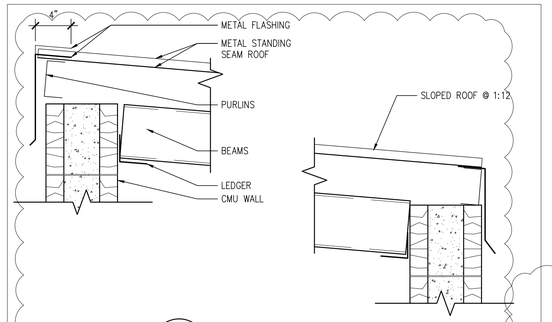

10 / A-5.2 ENCLOSURE SECTION
SCALE: 1-1/2" = 1'-0"

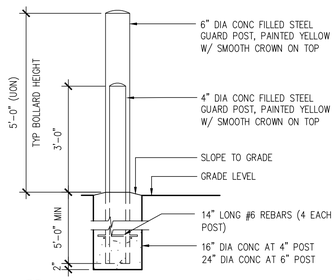

9 / A-5.2 BOLLARD DETAIL
SCALE: 1/2" = 1'-0"

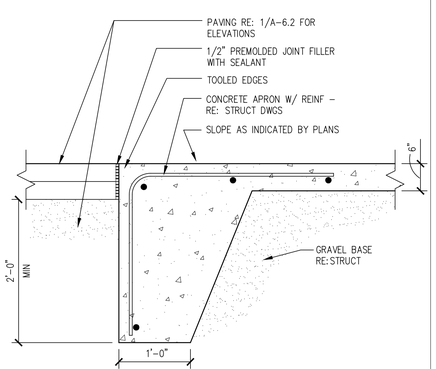

8 / A-5.2 CONC APRON DETAIL
SCALE: 1" = 1'-0"

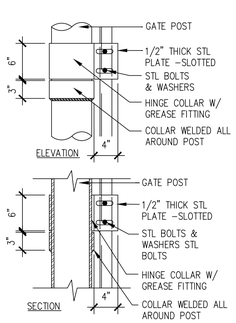

NOTE:
SECTIONS & DETAILS ALSO APPLY TO DUMPSTER ENCLOSURE, RE: SITE PLAN FOR DUMPSTER LOCATION

7 / A-5.2 GATE HINGE DETAIL
SCALE: 1" = 1'-0"

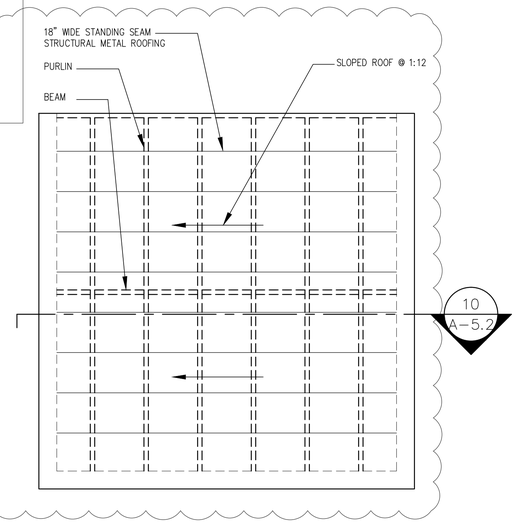

5 / A-5.2 DUMPSTER ROOF PLAN
SCALE: 3/8"=1'-0"

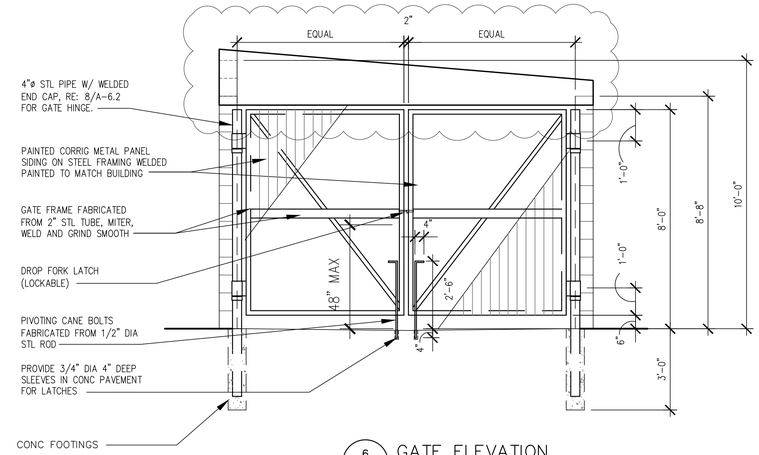

6 / A-6.2 GATE ELEVATION
SCALE: 3/8" = 1'-0"

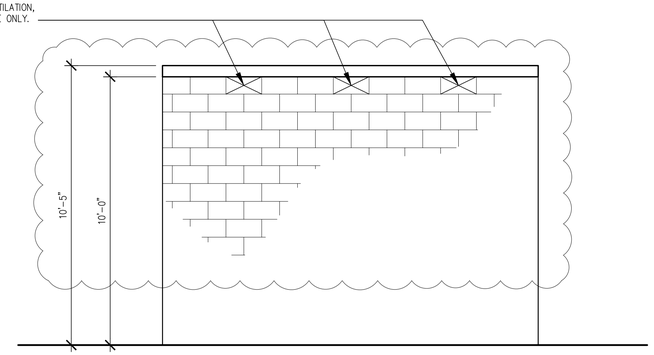

4 / A-6.2 DUMPSTER WEST ELEVATION
SCALE: 3/8" = 1'-0"

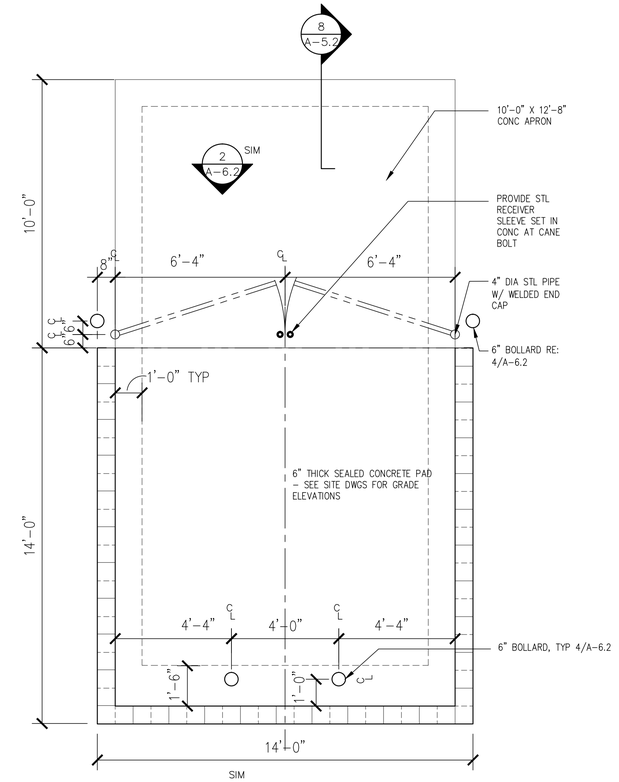

NOTE: REFER TO CIVIL DRAWINGS FOR LOCATION.

3 / A-6.2 DUMPSTER ENCLOSURE PLAN
SCALE: 3/8" = 1'-0"

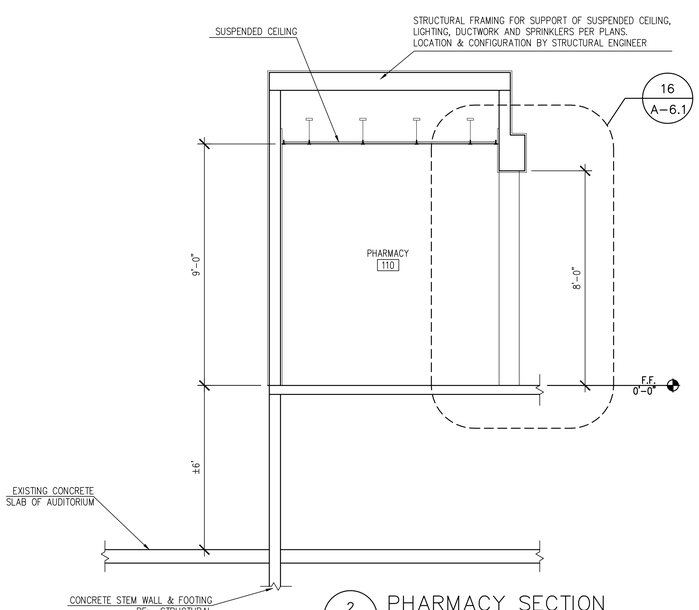

2 / A-5.2 PHARMACY SECTION
SCALE: 3/8"=1'-0"

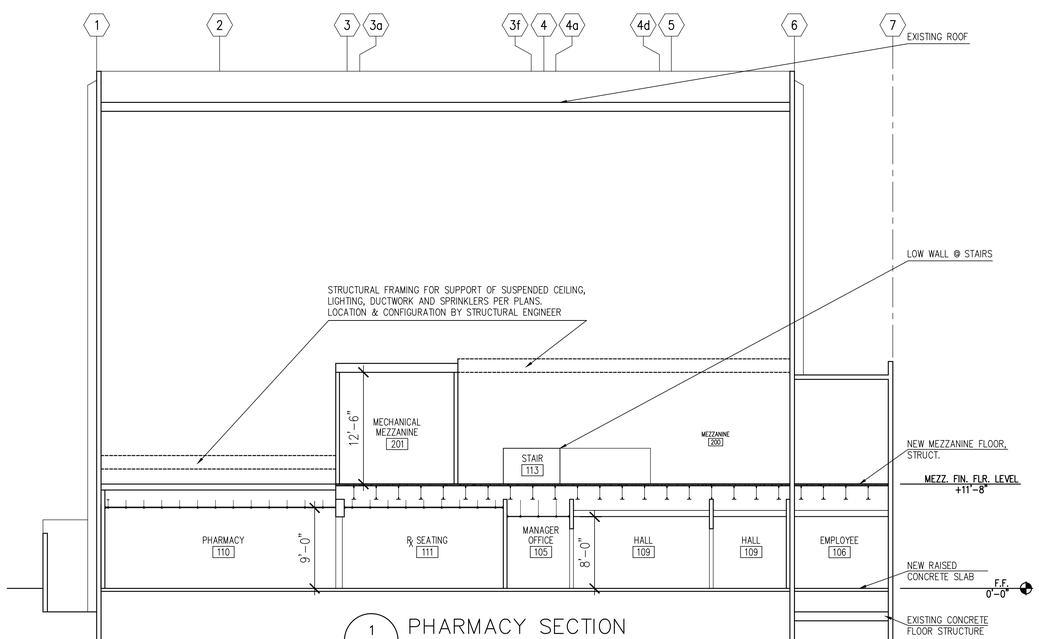

1 / A-5.2 PHARMACY SECTION
SCALE: 1/8"=1'-0"

18662 MacArthur Blvd.
Ste.200
Irvine, California 92612
(949) 796-3838
www.rkaa.com

ROBERT KABLECK
Architects And Associates, Inc.

LICENSED ARCHITECT
CRAIG JOHNSON
NO. C12434
STATE OF CALIFORNIA

COPYRIGHT 2001 ALL RIGHTS RESERVED.
ROBERT KABLECK ARCHITECTS AND ASSOCIATES
THIS DRAWING IS AN INSTRUMENT OF SERVICE. IT IS THE PROPERTY OF ROBERT KABLECK ARCHITECTS AND ASSOCIATES. IT MAY NOT BE USED, REPRODUCED, OR REPRODUCTION HERE OF USED, WITHOUT WRITTEN PERMISSION OF THE ARCHITECT.

date:	
10/4/10	Bldg. Dept. Submittal
10/15/10	Health Dept. Submittal
1/6/11	Chattel Architecture Submittal
1/27/11	Chattel Architecture Submittal

NOTICE OF ALTERNATE BILLING OR PAYMENT CYCLE: BOTH CONTRACTS MAY ALSO BE SUBJECT TO REQUIRE THE SUBMISSION OF BILLING OR PAYMENT DATA ON A MONTHLY OR OTHER SHORT DATE. THIS CONTRACT MAY ALLOW THE OWNER TO MAKE PAYMENTS ON A SHORT DATE BASIS AFTER CERTIFICATION - AND INTERVAL OF BILLINGS AND ESTIMATES. A WRITTEN DESCRIPTION OF SUCH BILLING AND/OR CYCLE APPLICABLE TO THE PROJECT IS AVAILABLE FROM THE OWNER AT THE OFFICES OF

OR HIS DESIGNATED AGENT SHALL PROVIDE THIS WRITTEN DESCRIPTION ON REQUEST.

DEVELOPER:
CHARLES COMPANY
9034 W. SUNSET BLVD.
WEST HOLLYWOOD
CA 90069
TEL (310) 247-0900
FAX (310) 247-1525

PHARMACY SECTIONS
TRASH ENCLOSURE

- / A-5.2

CVS pharmacy
STORE #4524
909 S. ATLANTIC BLVD
LOS ANGELES, CA

design RKA
drawn RKA
check RKA

sheet A-5.2
of
job 09151

1/27/2011 3:36:38 PM

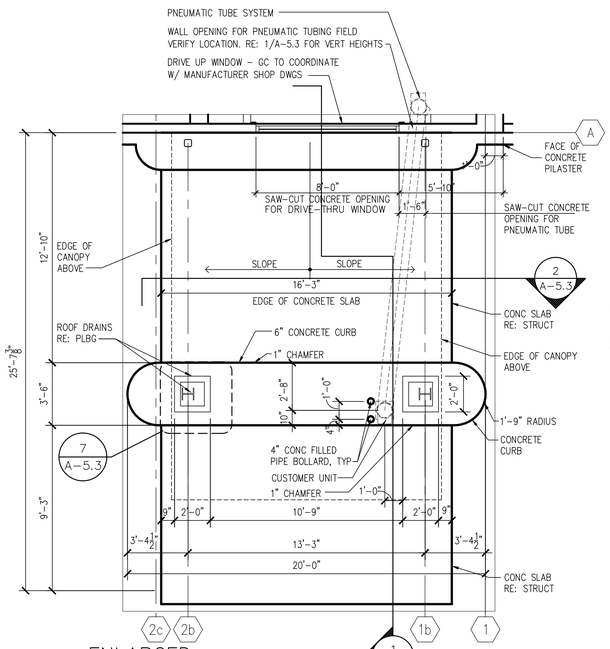

3 A-5.3 ENLARGED DRIVE-THRU PLAN
SCALE: 1/4" = 1'-0"

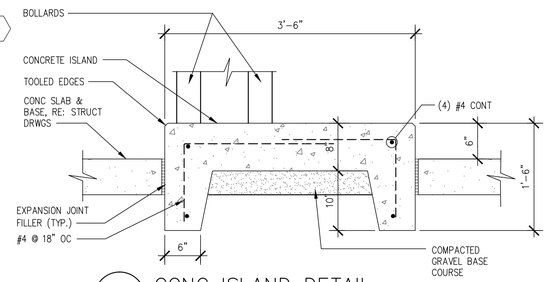

4 A-5.3 CONC ISLAND DETAIL
SCALE: 1" = 1'-0"

NOTE: REFER TO SHEET A-7.3 FOR ADDITIONAL EIFS INFORMATION

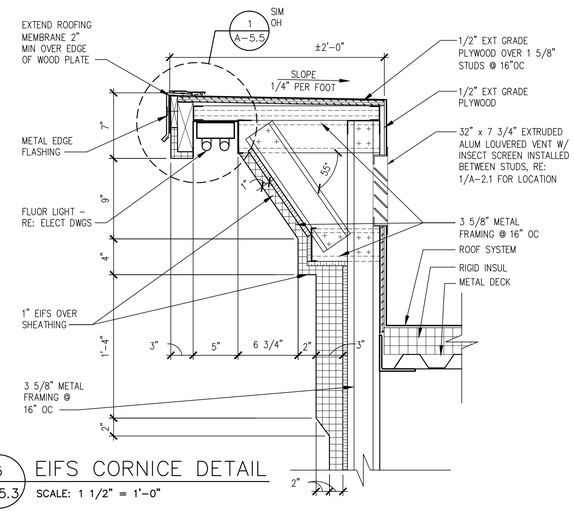

5 A-5.3 EIFS CORNICE DETAIL
SCALE: 1 1/2" = 1'-0"

INSULATION MINIMUM VALUES	
ROOF	R=25
WALLS	
1 1/2" RIGID INSUL	R=7.5
3 1/2" BATT INSUL	R=11
6" BATT INSUL	R=19

NOTE: REFER TO SPECIFICATIONS FOR ADDITIONAL EIFS DETAILS & INFORMATION

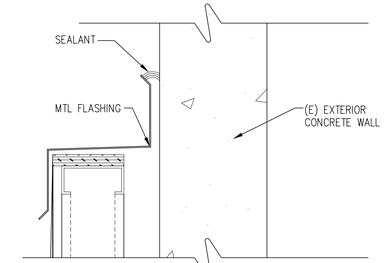

6 A-5.3 FLASHING DETAIL
SCALE: 3" = 1'-0"

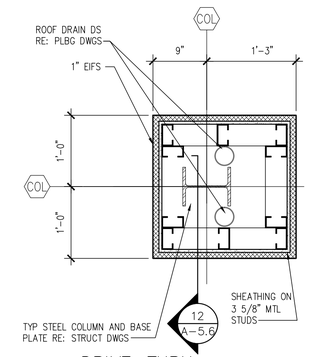

7 A-5.3 DRIVE-THRU COLUMN DETAIL
SCALE: 1" = 1'-0"

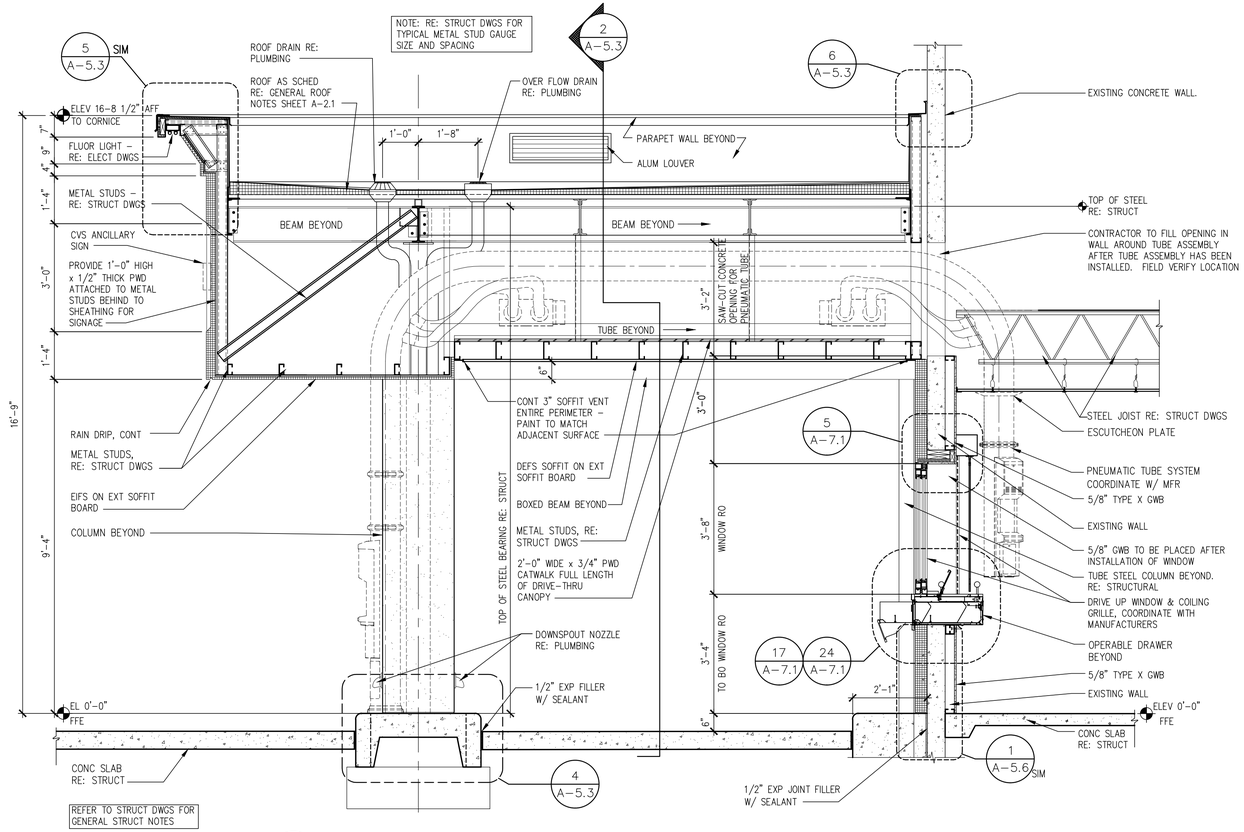

1 A-5.3 SECTION AT DRIVE-THRU
SCALE: 1/2" = 1'-0"

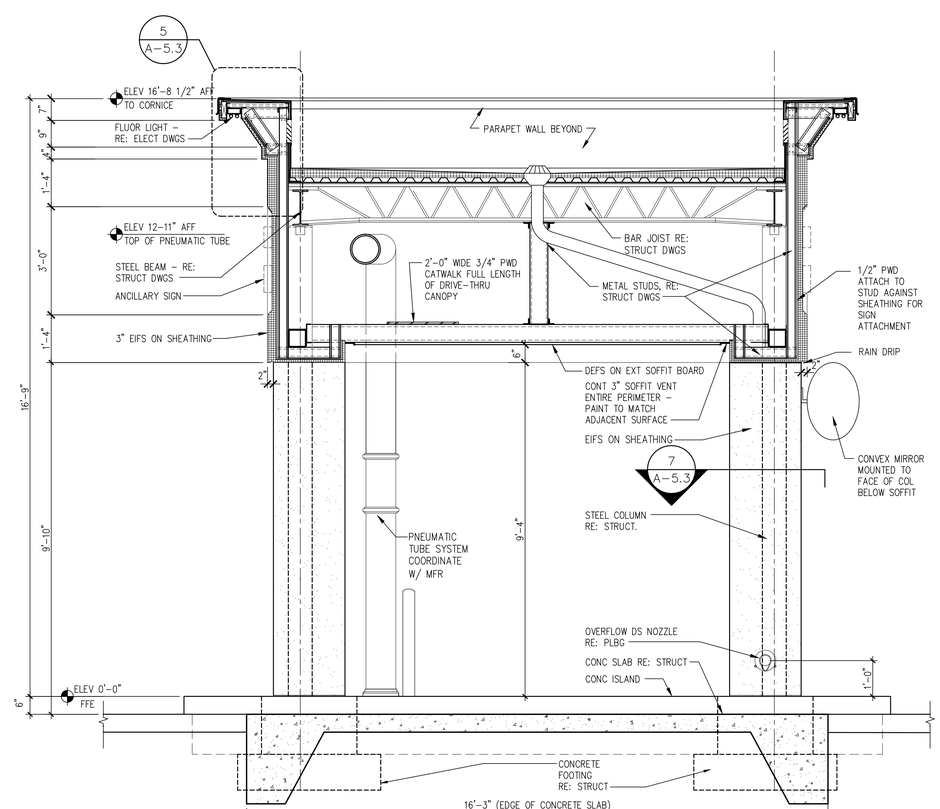

2 A-5.3 SECTION AT DRIVE-THRU
SCALE: 1/2" = 1'-0"

– A-5.3 DRIVE-THRU PLAN, SECTIONS & DETAILS

18662 MacArthur Blvd. Ste.200 Irvine, California 92612 (949) 796-3838 www.rka.com

ROBERT KUBICEK Architects And Associates, Inc.

LICENSED ARCHITECT CRAIG JOHNSON NO. C12434 STATE OF CALIFORNIA

COPYRIGHT 2001 ALL RIGHTS RESERVED. ROBERT KUBICEK ARCHITECTS AND ASSOC. INC. THIS DRAWING IS AN INSTRUMENT OF SERVICE, IT IS THE PROPERTY OF ROBERT KUBICEK ARCHITECTS AND ASSOC. INC. AND MAY NOT BE REPRODUCED, OR REPRODUCTION HERE OF USED, WITHOUT WRITTEN PERMISSION OF THE ARCHITECT.

date:	
10/4/10	Bldg Dept. Submittal
10/15/10	Health Dept. Submittal
1/6/11	Chattel Architecture Submittal
1/27/11	Chattel Architecture Submittal

NOTICE OF ALTERNATE BILLING OR PAYMENT CYCLE: THIS CONTRACT MAY ALLOW THE OWNER TO ALTERNATE BILLING CYCLES OR TO DELAY ESTIMATES IN BILLING CYCLES OTHER THAN MONTHLY. DATE. THIS CONTRACT MAY ALLOW THE OWNER TO DELAY ESTIMATES UNTIL 30 DAYS AFTER DATE OF WRITTEN CERTIFICATION AND APPROVAL OF BILLING AND ESTIMATES. WRITTEN DESCRIPTION OF THE ALTERNATE BILLING AND PAYMENT CYCLE FOR THIS PROJECT IS AVAILABLE FROM THE OWNER AT THE OFFICES OF

OR HIS DESIGNATED AGENT SHALL PROVIDE THIS WRITTEN DESCRIPTION ON REQUEST.

DEVELOPER:
CHARLES COMPANY
9034 W. SUNSET BLVD.
WEST HOLLYWOOD
CA 90069
TEL (310) 247-0900
FAX (310) 247-1525

CVS pharmacy
STORE #4524
909 S. ATLANTIC BLVD
LOS ANGELES, CA

design	RKA	
drawn	RKA	
check	RKA	

sheet A-5.3 of

job 09151

1/27/2011 3:37:27 PM

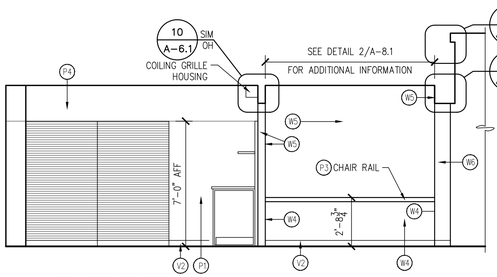

2 A-6.1 PHARMACY INTERIOR ELEV
SCALE: 1/4" = 1'-0"

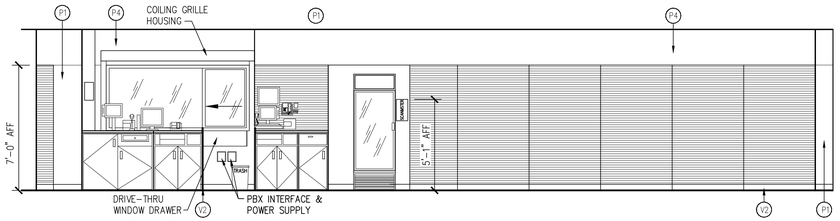

3 A-6.1 PHARMACY INTERIOR ELEV
SCALE: 1/4" = 1'-0"

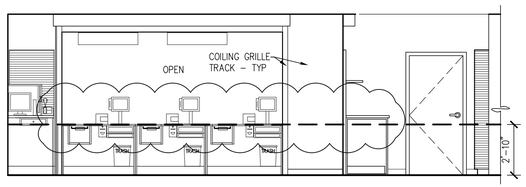

6 A-6.1 PHARMACY INTERIOR ELEV
SCALE: 1/4" = 1'-0"

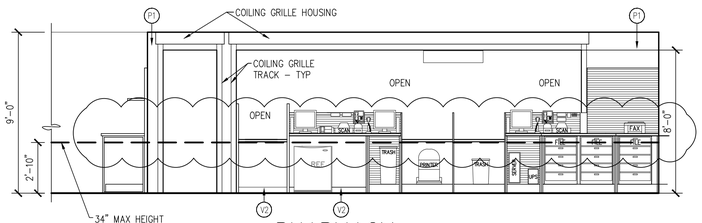

7 A-6.1 PHARMACY INTERIOR ELEV
SCALE: 1/4" = 1'-0"

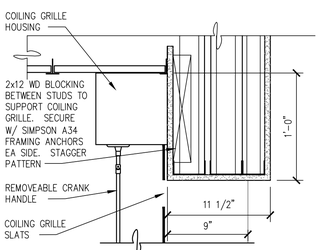

9 A-6.1 HEAD DETAIL
SCALE: 1 1/2" = 1'-0"

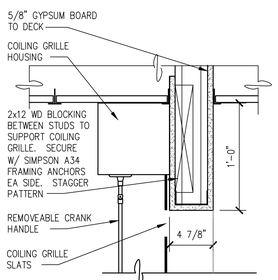

10 A-6.1 HEAD DETAIL
SCALE: 1 1/2" = 1'-0"

POWER REQUIREMENTS FOR WALL PANELS COORDINATE WITH SHEET E-1.4

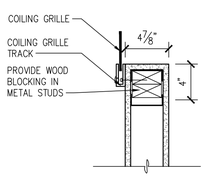

11 A-6.1 COILING GRILLE JAMB DETAIL
SCALE: 1 1/2" = 1'-0"

15 A-6.1 SIM

GENERAL NOTES:
1. VERIFY THE UNDERCABINET LOCATIONS W/ DWG F-1
2. REFER TO DETAIL 1/A-1.1 FOR PARTITION TYPES.
3. REFER TO SHEET A-7.3 FOR FLOORING LAYOUT.

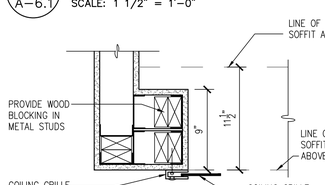

12 A-6.1 COILING GRILLE JAMB DETAIL
SCALE: 1 1/2" = 1'-0"

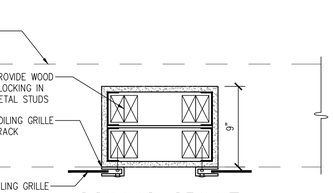

13 A-6.1 COILING GRILLE JAMB DETAIL
SCALE: 1 1/2" = 1'-0"

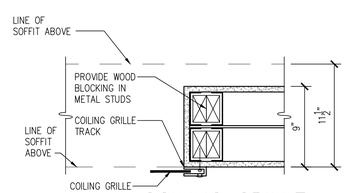

14 A-6.1 COILING GRILLE JAMB DETAIL
SCALE: 1 1/2" = 1'-0"

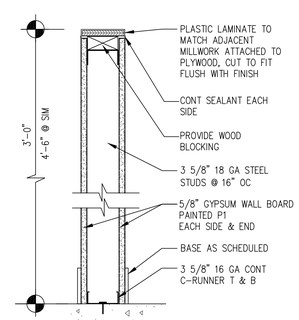

15 A-6.1 PARTITION DETAIL
SCALE: 1 1/2" = 1'-0"

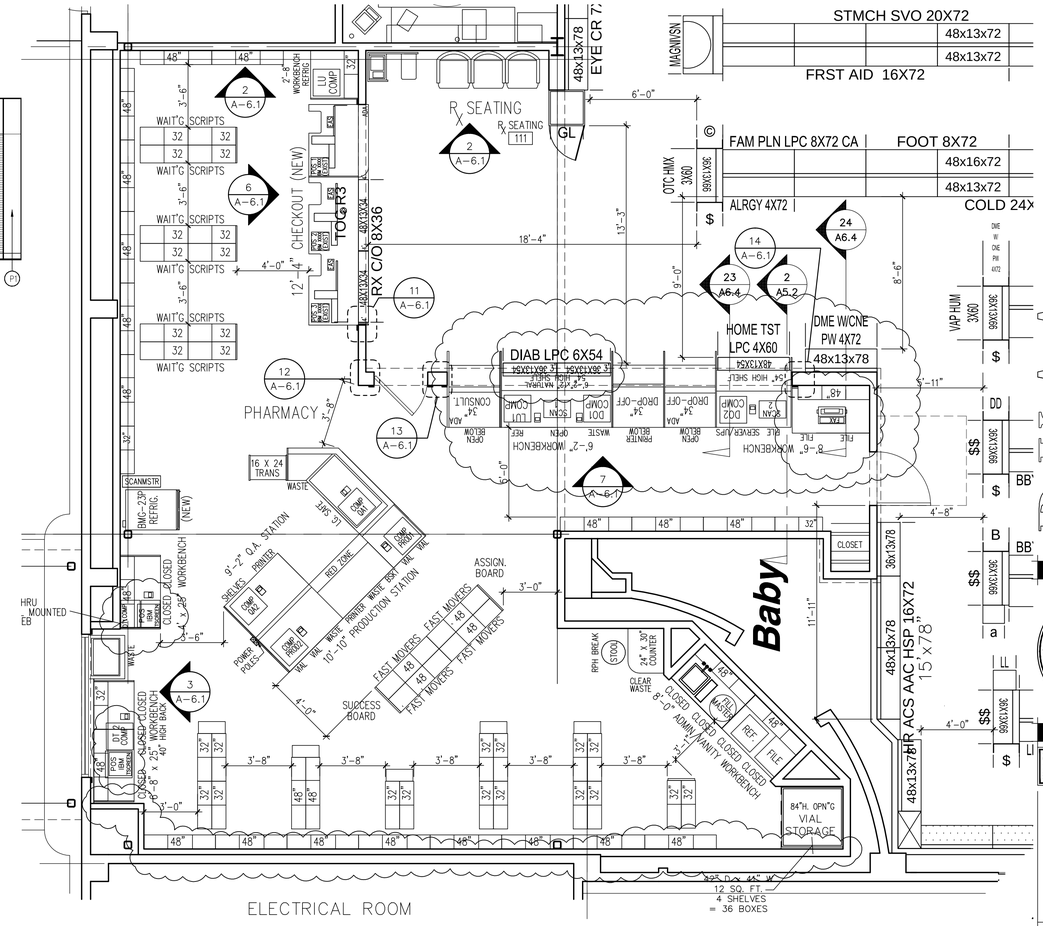

1 A-6.1 PHARMACY PLAN
SCALE: 1/4" = 1'-0"

ROBERT KABICEK Architects And Associates, Inc.
18662 MacArthur Blvd. Ste.200
Irvine, California 92612
(949) 796-3838
www.rka.com

LICENSED ARCHITECT CRAIG JOHNSON NO. C12434 STATE OF CALIFORNIA

COPYRIGHT 2001 ALL RIGHTS RESERVED. THIS DOCUMENT IS THE PROPERTY OF ROBERT KABICEK AND GRANTED TO AN INSTRUMENT OF SERVICE. IT IS THE PROPERTY OF ROBERT KABICEK ARCHITECTS, AND MAY NOT BE USED IN WHOLE OR IN PART WITHOUT OR REPRODUCTION HERE OF USED WITHOUT WRITTEN PERMISSION OF THE ARCHITECT.

date:	
10/4/10	Bldg. Dept. Submittal
10/15/10	Health Dept. Submittal

NOTICE OF ALTERNATE BILLING OR PAYMENT CYCLE: THIS CONTRACT MAY ALLOW THE OWNER TO ALTERNATE BILLING CYCLES OR PAYMENT ESTIMATES IN BILLING CYCLES OTHER THAN MONTHLY. THIS CONTRACT MAY ALLOW THE OWNER TO MAKE PAYMENTS ON ESTIMATES PRIOR TO AND AFTER CERTIFICATION AND APPROVAL OF BILLING AND ESTIMATES. WRITTEN DESCRIPTION OF SUCH ALTERNATE BILLING AND PAYMENT CYCLES IN THIS PROJECT IS AVAILABLE FROM THE OWNER AT THE OFFICES OF

OR HIS DESIGNATED AGENT SHALL PROVIDE THIS WRITTEN DESCRIPTION ON REQUEST.

DEVELOPER:
CHARLES COMPANY
9034 W. SUNSET BLVD.
WEST HOLLYWOOD
CA 90069
TEL (310) 247-0900
FAX (310) 247-1525

CVS pharmacy
STORE #4524
909 S. ATLANTIC BLVD
LOS ANGELES, CA

design	RKA
drawn	RKA
check	RKA

sheet A-6.1
job 09151

PHARMACY PLAN, SECTIONS, & ELEVATIONS

1/27/2011 3:38:35 PM

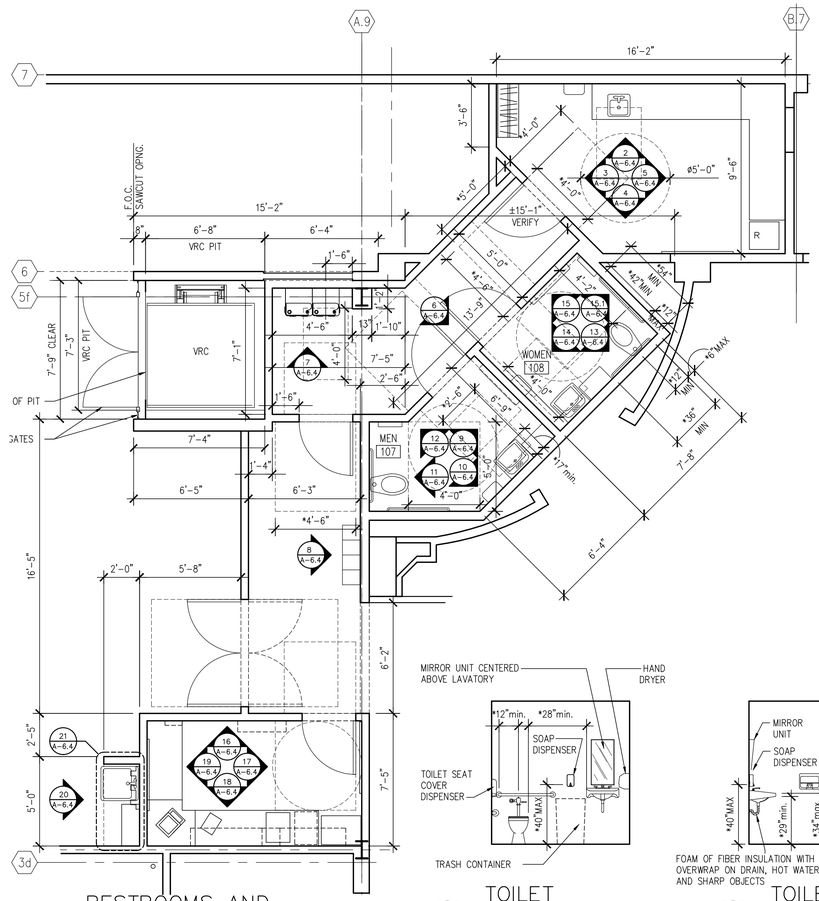

1 A-6.4 RESTROOMS AND EMPLOYEE PLAN
SCALE: 1/4" = 1'-0"

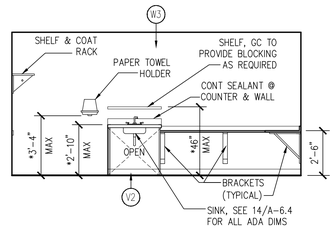

2 A-6.4 EMPLOYEE ELEV
SCALE: 1/4" = 1'-0"

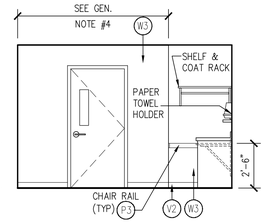

3 A-6.4 EMPLOYEE ELEV
SCALE: 1/4" = 1'-0"

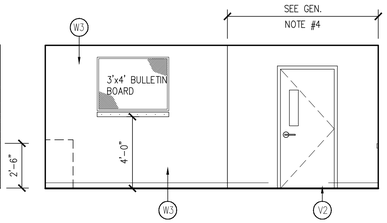

4 A-6.4 EMPLOYEE ELEV
SCALE: 1/4" = 1'-0"

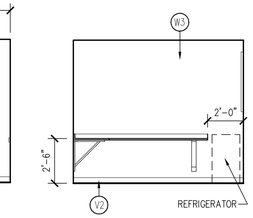

5 A-6.4 EMPLOYEE ELEV
SCALE: 1/4" = 1'-0"

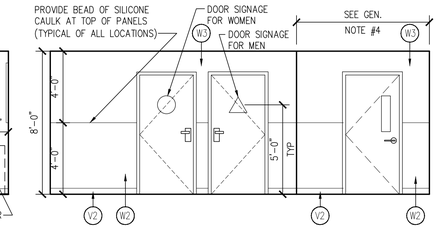

6 A-6.4 HALL ELEVATION
SCALE: 1/4" = 1'-0"

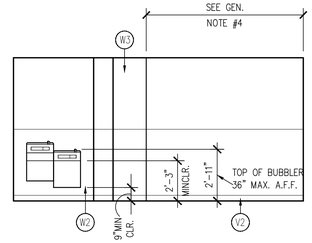

7 A-6.4 HALL ELEVATION
SCALE: 1/4" = 1'-0"

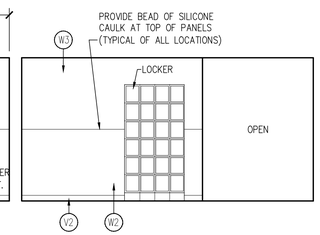

8 A-6.4 HALL ELEVATION
SCALE: 1/4" = 1'-0"

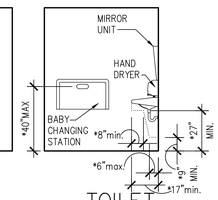

9 A-6.4 TOILET ELEVATION
SCALE: 1/4" = 1'-0"

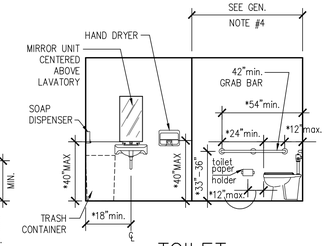

10 A-6.4 TOILET ELEVATION
SCALE: 1/4" = 1'-0"

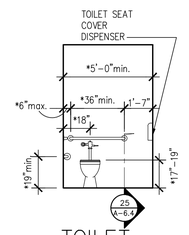

11 A-6.4 TOILET ELEVATION
SCALE: 1/4" = 1'-0"

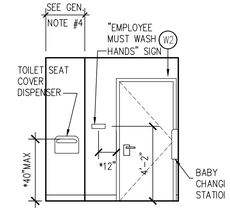

12 A-6.4 TOILET ELEVATION
SCALE: 1/4" = 1'-0"

13 A-6.4 TOILET ELEVATION
SCALE: 1/4" = 1'-0"

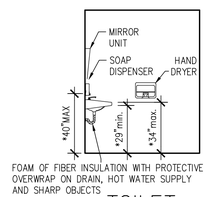

14 A-6.4 TOILET ELEVATION
SCALE: 1/4" = 1'-0"

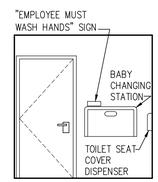

15 A-6.4 TOILET ELEVATION
SCALE: 1/4" = 1'-0"

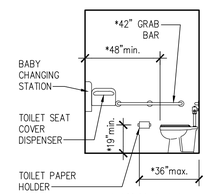

15.1 A-6.4 TOILET ELEVATION
SCALE: 1/4" = 1'-0"

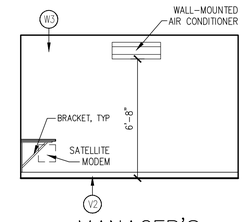

16 A-6.4 MANAGER'S OFFICE ELEV
SCALE: 1/4" = 1'-0"

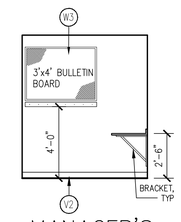

17 A-6.4 MANAGER'S OFFICE ELEV
SCALE: 1/4" = 1'-0"

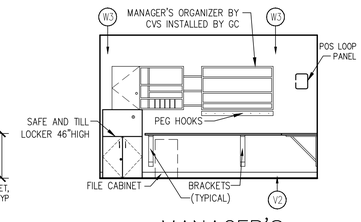

18 A-6.4 MANAGER'S OFFICE ELEV
SCALE: 1/4" = 1'-0"

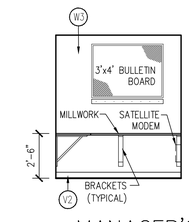

19 A-6.4 MANAGER'S OFFICE ELEV
SCALE: 1/4" = 1'-0"

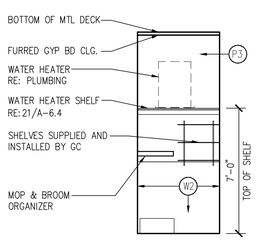

20 A-6.4 UTILITY SHELVES
SCALE: 1/4" = 1'-0"

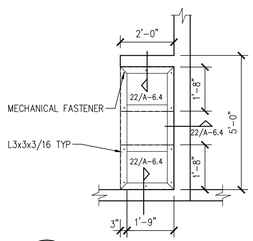

21 A-6.4 SHELF FRAMING
SCALE: 3/8" = 1'-0"

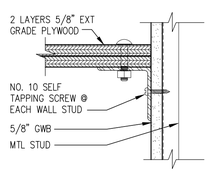

22 A-6.4 DETAIL
SCALE: 3" = 1'-0"

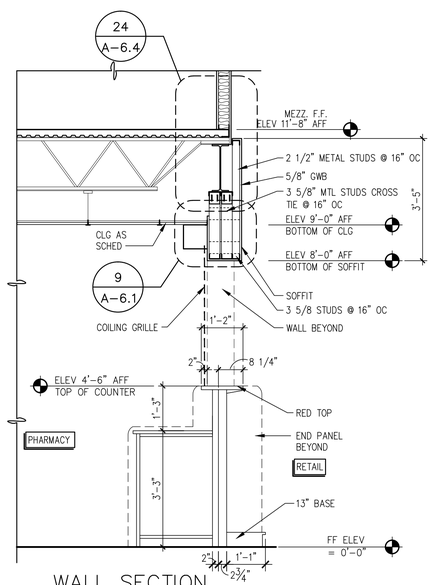

23 A-6.4 WALL SECTION AT Rx WORKBENCH
SCALE: 1/2" = 1'-0" DROP OFF COUNTER SIMILAR

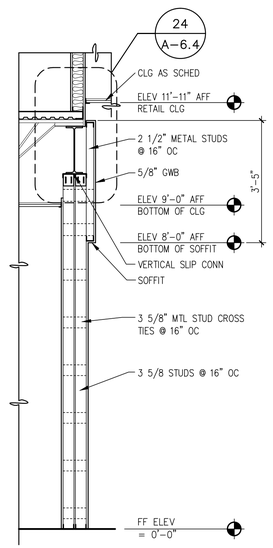

23 A-6.4 WALL SECTION
SCALE: 1/2" = 1'-0"

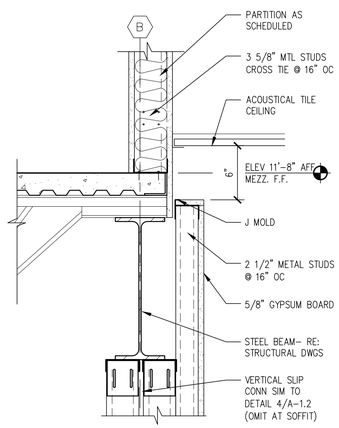

24 A-6.4 DETAIL
SCALE: 1 1/2" = 1'-0"

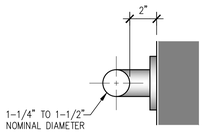

25 A-6.4 GRAB BAR DETAIL
SCALE: 3" = 1'-0"

HANDICAP SIGNAGE NOTES

1. DOOR WAYS LEADING TO MEN'S SANITARY FACILITIES SHALL BE IDENTIFIED BY AN EQUILATERAL TRIANGLE 1/4" THICK WITH EDGES 12" LONG AND VERTEX POINTING UPWARD. WOMEN'S SANITARY FACILITIES SHALL BE IDENTIFIED BY A CIRCLE 1/4" THICK AND 12" IN DIAMETER.
2. GEOMETRIC (CIRCLE AND TRIANGLE) SYMBOLS ON SANITARY FACILITY DOORS SHALL BE CENTERED ON THE DOOR AT A HEIGHT OF 60" AND THEIR COLOR AND CONTRAST SHALL BE DISTINCTLY DIFFERENT FROM THE COLOR AND CONTRAST OF THE DOOR.
3. THE INTERNATIONAL SYMBOL OF ACCESSIBILITY SHALL CONSIST OF A WHITE FIGURE ON A BLUE BACKGROUND. THE BLUE SHALL BE EQUAL TO COLOR NO 15090 IN FEDERAL STANDARDS 5998. THE INTERNATIONAL SYMBOL OF ACCESSIBILITY SHALL IDENTIFY FACILITIES THAT ARE ACCESSIBLE TO AND USABLE BY PHYSICALLY DISABLED PERSONS.
4. ALL BUILDING ENTRANCES THAT ARE ACCESSIBLE TO AND USABLE BY PERSONS WITH DISABILITIES AND AT EVERY MAJOR JUNCTION ALONG OR LEADING TO AN ACCESSIBLE ROUTE OF TRAVEL SHALL BE IDENTIFIED WITH A SIGN DISPLAYING THE INTERNATIONAL SYMBOL OF ACCESSIBILITY AND WITH ADDITIONAL DIRECTIONAL SIGNS, AS REQUIRED, TO BE VISIBLE TO PERSONS ALONG APPROACHING PEDESTRIAN WAYS.
5. WHEN PERMANENT IDENTIFICATION IS PROVIDED FOR ROOMS AND SPACES, RAISED LETTERS SHALL BE PROVIDED AND SHALL BE ACCOMPANIED BY BRAILLE IN CONFORMANCE WITH SECTION 1117B.5.6. SIGNS SHALL BE INSTALLED ON THE WALL SPACE ON THE LATCH SIDE, INCLUDING AT DOUBLE LEAF DOORS, SIGNS SHALL BE PLACED ON THE NEAREST ADJACENT WALL, PREFERABLY ON THE RIGHT. MOUNTING HEIGHT SHALL BE 60" ABOVE THE FINISHED FLOOR TO THE CENTERLINE OF THE SIGN. MOUNTING LOCATION SHALL BE DETERMINED SO THAT A PERSON MAY APPROACH WITHIN 3" OF SIGNAGE WITHOUT ENCOUNTERING PROTRUDING OBJECTS OR STANDING WITHIN THE SWING OF A DOOR.
6. ACCESSIBLE CHECKSTAND SHALL ALWAYS BE OPEN TO CUSTOMERS WITH DISABILITIES AND SHALL BE IDENTIFIED BY A SIGN CLEARLY VISIBLE TO THOSE IN WHEELCHAIRS. THE SIGN SHALL DISPLAY THE INTERNATIONAL SYMBOL OF ACCESSIBILITY IN WHITE ON A BLUE BACKGROUND AND SHALL STATE "THIS CHECKSTAND TO OPEN AT ALL TIMES FOR CUSTOMERS WITH DISABILITIES".

TITLE 24 RESTROOM NOTES:

1. CONTROLS FOR WATER CLOSET FLUSH VALVES SHALL BE MOUNTED ON THE WIDE SIDE OF TOILET AREAS.
2. WATER CLOSET AND URINAL FLUSH VALVE CONTROLS, AND FAUCET AND OPERATING MECHANISM CONTROLS, SHALL BE OPERABLE WITH ONE HAND, SHALL NOT REQUIRE TIGHT GRASPING, PINCHING, OR TWISTING OF THE WRIST, AND SHALL BE MOUNTED NO MORE THAN 44" AFF (1115B.2.1.1.2)
3. THE FORCE REQUIRED TO ACTIVATE WATER CLOSET AND URINAL FLUSH VALVE CONTROLS, AND FAUCET AND OPERATING MECHANISM CONTROLS, SHALL BE NO GREATER THAN 5 LBF. ELECTRONIC OR AUTOMATIC FLUSHING CONTROLS ARE ACCEPTABLE AND PREFERABLE. (1115B.2.1.2.1)
4. SELF-CLOSING FAUCET CONTROL VALVES ARE ALLOWED IF THE FAUCET REMAINS OPEN FOR AT LEAST 10 SECONDS. (115B.2.1.6.1)
5. WHERE TOWEL, SANITARY NAPKINS, WASTE RECEPTACLES, AND OTHER SIMILAR DISPENSING AND DISPOSAL FIXTURES ARE PROVIDED, AT LEAST ONE OF EACH TYPE SHALL BE LOCATED WITH ALL OPERABLE PARTS, INCLUDING COIN SLOTS, WITHIN 40" FROM THE FINISHED FLOOR. (1115B.9.2)
6. THE DIAMETER OR WIDTH OF THE GRIPPING SURFACES OF A GRAB BAR SHALL BE 1 1/4" TO 1 1/2" NOMINAL OR THE SHAPE SHALL PROVIDE AND EQUIVALENT GRIPPING SURFACE. IF GRAB BARS ARE MOUNTED ADJACENT TO A WALL, THE SPACE BETWEEN THE WALL AND THE GRAB BARS SHALL BE 1 1/2". (1115B.8.2, FIG 11B-1C)
7. THE STRUCTURAL STRENGTH OF GRAB BARS, TUB AND SHOWER SEATS, FASTENERS, AND MOUNTING DEVICES SHALL MEET THE REQUIREMENTS OF SECTIONS 1115B.8.3.
8. THE GRAB BAR AND ANY WALL OR OTHER SURFACE ADJACENT TO IT SHALL BE FREE OF ANY SHARP OR ABRASIVE ELEMENTS. EDGES SHALL HAVE A MINIMUM RADIUS OF 1/8". (1115B.8.4)

GENERAL NOTES:

1. SEE PLUMBING DRAWINGS FOR FIXTURES
2. INSTALL INSULATION ON ALL EXPOSED PIPES BELOW SINKS AND LAVATORIES TO COMPLY WITH STATE AND LOCAL CODES.
3. SEE 14/A-6.4 FOR MOUNTING HEIGHTS OF ALL TOILET ROOM ACCESSORIES
4. WALL SHOWN HEAD ON NOT COPLANAR WITH ADJACENT WALL.

* ASTERISK DENOTES "TYPICAL" FOR THIS SHEET.

NOTES:
1. REFER TO SHEET A-1.1 FOR PARTITION TYPES

ENLARGED PLANS, DETAILS, & ELEVATIONS

ROBERT KABICEK Architects And Associates, Inc.
18662 MacArthur Blvd. Ste.200
Irvine, California 92612
(949) 796-3838
www.rka.com

LICENSED ARCHITECT CRAIG JOHNSON NO. C12434 STATE OF CALIFORNIA

COPYRIGHT 2007 ALL RIGHTS RESERVED. THIS DRAWING AND THE DESIGN SHOWN THEREIN IS AND SHALL REMAIN THE PROPERTY OF ROBERT KABICEK ARCHITECTS. THE DRAWING IS TO BE USED FOR THIS PROJECT ONLY AND NOT TO BE REPRODUCED IN WHOLE OR IN PART WITHOUT WRITTEN PERMISSION OF THE ARCHITECT.

date:	
10/4/10	Bldg. Dept. Submittal
10/15/10	Health Dept. Submittal
1/6/11	Chattel Architecture Submittal
1/27/11	Chattel Architecture Submittal

NOTICE OF ALTERNATE BILLING OR PAYMENT CYCLE: THIS CONTRACT MAY INCLUDE THE OWNER TO REQUIRE THE SUBMISSION OF BILLINGS ON ANY BASIS OTHER THAN MONTHLY, OR WITHIN THIRTY DAYS. THE CONTRACT MAY ALSO INCLUDE THE OWNER AS MAKE PAYMENT ON SOME ALTERNATIVE SCHEDULE OTHER THAN THIRTY DAYS AFTER RECEIPT OF BILLING AND ESTIMATES. A WRITTEN DESCRIPTION OF SUCH OTHER BILLING AND/OR CYCLE APPLICABLE TO THE OWNER IS AVAILABLE FROM THE OWNER AT THE OFFICES OF

OR HIS DESIGNATED AGENT SHALL PROVIDE THIS WRITTEN DESCRIPTION ON REQUEST.

DEVELOPER:
CHARLES COMPANY
9034 W. SUNSET BLVD.
WEST HOLLYWOOD
CA 90069
TEL (310) 247-0900
FAX (310) 247-1525

CVS pharmacy
STORE #4524
909 S. ATLANTIC BLVD
LOS ANGELES, CA

design	RKA	check	RKA
drawn	RKA		

sheet A-6.4 of job 09151

1/27/2011 3:39:44 PM

NOTE: REFER TO STRUCTURAL DRAWINGS FOR ALL REINF.

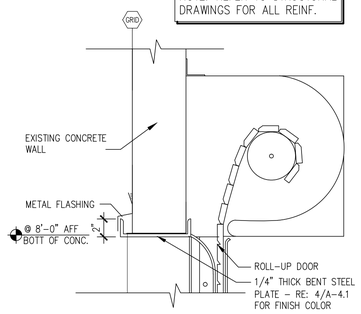

4 A-7.1 HEAD DETAIL
SCALE: 1 1/2" = 1'-0"

NOTE: REFER TO SPECIFICATIONS FOR ADDITIONAL EIFS DETAILS & INFORMATION

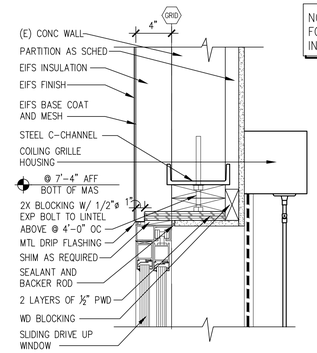

5 A-7.1 HEAD DETAIL
SCALE: 1 1/2" = 1'-0"

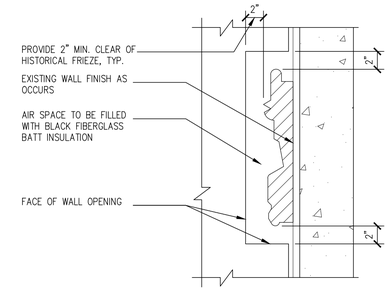

6 A-7.1 NEW WALL AROUND DECORATIVE FRIEZE
SCALE: 1 1/2" = 1'-0"

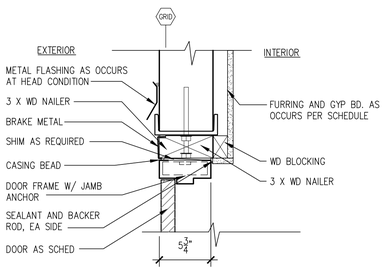

8 A-7.1 HEAD & JAMB DETAIL
SCALE: 1 1/2" = 1'-0"

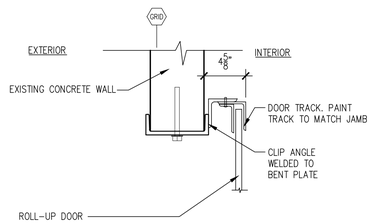

10 A-7.1 JAMB DETAIL
SCALE: 1 1/2" = 1'-0"

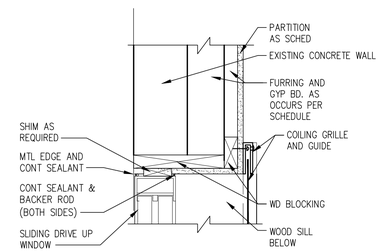

11 A-7.1 JAMB DETAIL
SCALE: 1 1/2" = 1'-0"

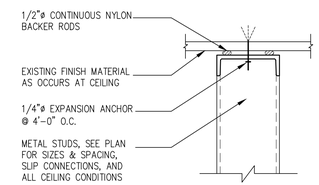

12 A-7.1 CONNECTION @ NEW WALL & EXISTING CEILING
SCALE: 1 1/2" = 1'-0"

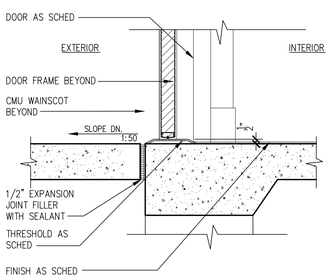

14 A-7.1 THRESH DETAIL
SCALE: 1 1/2" = 1'-0"

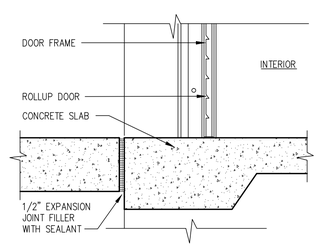

16 A-7.1 THRESH DETAIL
SCALE: 1 1/2" = 1'-0"

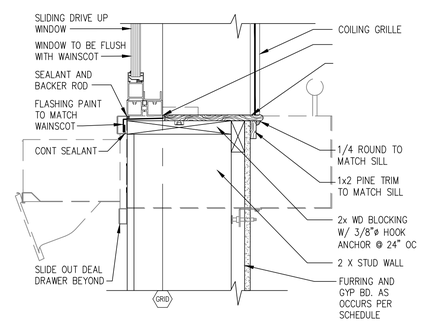

17 A-7.1 SILL DETAIL
SCALE: 1 1/2" = 1'-0"

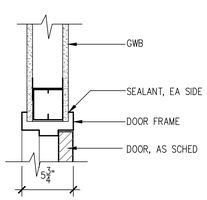

19 A-7.1 HEAD DETAIL
SCALE: 1 1/2" = 1'-0"

TYPICAL HOLLOW METAL DOOR IN GWB CONSTRUCTION

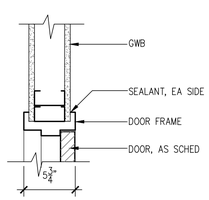

20 A-7.1 JAMB DETAIL
SCALE: 1 1/2" = 1'-0"

TYPICAL HOLLOW METAL DOOR IN GWB CONSTRUCTION

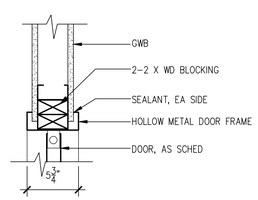

22 A-7.1 JAMB/ HEAD SIM.
SCALE: 1 1/2" = 1'-0"

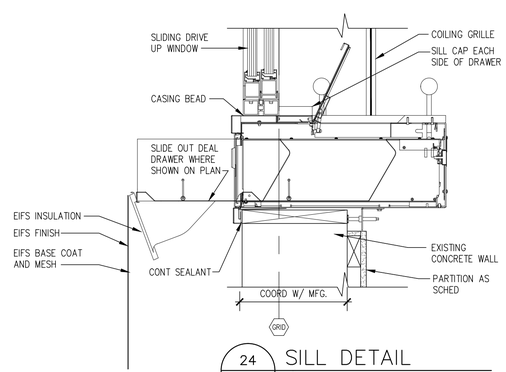

24 A-7.1 SILL DETAIL
SCALE: 1 1/2" = 1'-0"

1 A-7.1 DOOR & WINDOW DETAILS
SCALE: 1 1/2" = 1'-0"

18662 MacArthur Blvd.
Ste.200
Irvine, California 92612
(949) 796-3838
www.rkaa.com

ROBERT KABICEK
Architects And Associates, Inc.

LICENSED ARCHITECT
CRAIG JOHNSON
NO. C12434
STATE OF CALIFORNIA

COPYRIGHT 2001 ALL RIGHTS RESERVED.
ROBERT KABICEK ARCHITECTS AND ASSOCIATES
THIS DRAWING IS AN INSTRUMENT OF SERVICE. IT IS THE PROPERTY OF ROBERT KABICEK ARCHITECTS AND ASSOCIATES. IT MAY NOT BE USED, REPRODUCED, OR REPRODUCTION HERE OF USED, WITHOUT WRITTEN PERMISSION OF THE ARCHITECT.

date:	
10/4/10	Bldg. Dept. Submittal
10/15/10	Health Dept. Submittal

NOTICE OF ALTERNATE BILLING OR PAYMENT CYCLE: THIS CONTRACT MAY ALLOW THE OWNER TO ALTERNATE BILLING CYCLES OR PAYMENT ESTIMATES IN BILLING CYCLES OTHER THAN THIRTY DAYS. THIS CONTRACT MAY ALLOW THE OWNER TO WITHHOLD PAYMENT UNTIL THE CONTRACTOR PROVIDES LIEN CERTIFICATION AND APPROVAL OF BILLING AND ESTIMATES. A WRITTEN DESCRIPTION OF SUCH ALTERNATE BILLING OR PAYMENT CYCLE FOR THIS PROJECT IS AVAILABLE FROM THE OWNER AT THE OFFICES OF

THE AIA DESIGNATED AGENT SHALL PROVIDE THIS WRITTEN DESCRIPTION ON REQUEST

DEVELOPER:
CHARLES COMPANY
9034 W. SUNSET BLVD.
WEST HOLLYWOOD
CA 90069
TEL (310) 247-0900
FAX (310) 247-1525

CVS pharmacy
STORE #4524
909 S. ATLANTIC BLVD
LOS ANGELES, CA

design	RKA
drawn	RKA
check	RKA

sheet A-7.1
job 09151

1/27/2011 3:40:36 PM

INTERIOR FINISH SCHEDULE

TAG	MATERIAL / DESCRIPTION	MFR.	STYLE/ CAT. NO.	COLOR	NOTES
ACOUSTICAL					
A1	CEILING TILE	ARMSTRONG	769	WHITE	2 x 4 PANELS
CARPET					
C1	CARPET TILE	INTERFACE	FLOR 60300	#603055 GREY	REFER TO "CARPET TILE" SPEC
C2	CUSHION BACKED CARPET TILE	INTERFACE	ENTROPY 14648	#7233 DEEP BLUE	REFER TO "CARPET TILE" SPEC
C3	HARD BACKED CARPET TILE	INTERFACE	ENTROPY 14648	#7233 DEEP BLUE	REFER TO "CARPET TILE" SPEC
C4	CARPET TILE	INTERFACE	FLOR – S	#603059 ANTHRACITE	REFER TO "CARPET TILE" SPEC
CERAMIC TILE					
T1	CERAMIC TILE	AMERICAN OLEAN	INTEGRA	CHARCOAL HAZE UP52	BASE COVE. 89 SMOKE GREY (II) LATICRETE GROUT
GLAZING					
G1	1" INSUL GLASS			CLEAR	
G2	1/4" LAMINATED GLASS			CLEAR	
G3	1/4" ONE WAY MIRROR	PILKINGTON	MIRROPANE E.P.		GLASS IN DOORS TO BE TEMPERED
G4	BULLET RESISTIVE GLASS			CLEAR	
G5	1/4" FLOAT GLASS			CLEAR	GLASS IN DOORS TO BE TEMPERED
PAINTS / SEALANTS					
P1	PAINT	BENJAMIN MOORE	876	ATRIUM WHITE (AKA ALABASTER)	ECOSPEC 374, 2 COATS, PAINT ABOVE 60" AFF ALSO USED FOR EAS PEDESTALS.
P2	PAINT	BENJAMIN MOORE	2124–30	DEEP SILVER	PAINT HANDRAIL AND STAIRS, STAIRS TO HAVE SAND FINISH.
P3	PAINT	BENJAMIN MOORE	2137–60	GRAY OWL	ECOSPEC 374, 2 COATS, WALL/TRIM PAINT.
P4	PAINT	BENJAMIN MOORE	2059–60	SPLASH	ECOSPEC 374, 2 COATS, WALL/TRIM PAINT.
P5	POLYURETHANE	BENJAMIN MOORE	BENWOOD C435	CLEAR	2 COATS
P6	CONCRETE SEALER	THE EUCLID CHEMICAL CO.	EUCO DIAMOND HARD	CLEAR	2 COATS
P7	GRAFFITI PROTECTION COAT	RANDOLPH	"ARMAGLAZE" #9000	CLEAR	NOT IN CONTRACT
P8	PRIMER	NU–BRITE/MURALC	8400/CLEAR		
HISTORICAL PAINT					
HP1	PAINT	DUNN EDWARDS	DEW382 FADED GRAY		PAINT COLOR TO BE APPROVED BY CHATTEL ARCHITECTURE
HP2	PAINT	DUNN EDWARDS			PAINT COLOR TO BE APPROVED BY CHATTEL ARCHITECTURE
HP3	PAINT	MODERN MASTERS	ME 660 PHARAOH'S GOLD		PAINT COLOR TO BE APPROVED BY CHATTEL ARCHITECTURE
VINYL					
V1	VINYL TILE	ARMSTRONG	51915	CHARCOAL	
V2	VINYL BASE	BURKEMERCER	4GL COVE	204 GREY	
V3	VINYL TILE	CENTIVA	C–1167	LIGHT GRANITE	REFER TO "RESILIENT TILE FLOORING" SPEC
V4	VINYL BASE	BURKEMERCER	4GL COVE	663 SKY GREY	PHOTO LAB MILLWORK
WALL COVERING					
W1	1/2" OSB			UNPAINTED	
W2	WATERPROOF WALL PANEL	MARLITE	P–100	WHITE	
W3	WALL COVERING	WOLF GORDON	WG–4098351	FAIRVIEW	
W4	WALL COVERING	WOLF GORDON	WG–870526		INSTALL STRIPES RUNNING VERTICAL
W5	WALL COVERING	WOLF GORDON	WG–958612		
W6	WALL COVERING	WOLF GORDON	WG–4094001	WHITE STIPPE	91" HIGH AFF WHERE NO FIXTURES ARE PLACED. COORDINATE EXTENT OF WALL COVERING WITH UPDATED MERCHANDISE PLAN.

DOOR AND FRAME SCHEDULE

TAG	TYPE	DOOR SIZE WD	DOOR SIZE HGT	DOOR SIZE THK	DOOR MATL	GLAZING	LOUVER WD	LOUVER HGT	FRAME MATL	FRAME DETAIL HEAD	FRAME DETAIL JAMB	FRAME DETAIL SILL	FIRE RATING LABEL	HARDWARE SET NO.	NOTES
1	A	2 X 6'–10"	7'–4"	—	AL.	G2			AL.	1/A–7.1	7/A–7.1	13/A–7.1	—	HWS–01	12. 14.
2	B	3'–0"	7'–0"	1 3/4"	INS. H.M.				H.M.	2/A–7.1	8/A–7.1	14/A–7.1	—	HWS–02	1.
3															
4	B	3'–0"	7'–0"	1 3/4"	INS. H.M.				H.M.	2/A–7.1	8/A–7.1	14/A–7.1	—	HWS–02	2.
5	D	5'–4"	8'–0"	3/4"	—				MTL.	4/A–7.1	10/A–7.1	16/A–7.1	—	HWS–04	13.
6	C	3'–0"	6'–8"	1 3/4"	WD.	G2			H.M.	19/A–7.1	20/A–7.1	—	—	HWS–08	4. 6. 9.
7	C	3'–0"	6'–8"	1 3/4"	WD.	G3			H.M.	19/A–7.1	20/A–7.1	—	—	HWS–05	4. 6. 9.
8	C	3'–0"	6'–8"	1 3/4"	WD.	G5			H.M.	19/A–7.1	20/A–7.1	—	—	HWS–06	4. 6. 9.
9	B	3'–0"	6'–8"	1 3/4"	WD.				H.M.	19/A–7.1	20/A–7.1	23/A–7.1	—	HWS–07	4. 6. 15.
10	B	3'–0"	6'–8"	1 3/4"	WD.				H.M.	19/A–7.1	20/A–7.1	23/A–7.1	—	HWS–07	4. 6. 15.
11	B	3'–0"	6'–8"	1 3/4"	H.M.				H.M.	19/A–7.1	20/A–7.1	—	—	HWS–05	6. 8.
12	E	19'–4"	3'–6"	—	—					9/A–6.1	12&13/A–6.1	—	—	HWS–09	3. 7.
13	E	3'–0"	3'–6"	—	—					9/A–6.1	13&14/A–6.1	—	—	HWS–09	3. 7.
14	E	12'–4"	8'–0"	—	—					10/A–6.1	11&14/A–6.1	—	—	HWS–09	3. 7.
15	E	8'–0"	3'–8"	—	—					5/A–7.1	1/A–5.4 & 11/A–7.1	17/A–7.1	—	HWS–09	7.
16	F	6'–0"	8'–0"	3/4"	S.C.				H.M.	22/A–7.1	22/A–7.1	21/A–7.1	—	HWS–09	5. 7. 10. 11.

NOTE: REFER TO SPECIFICATIONS MANUAL FOR HARDWARE SETS.

REMARKS
1. PAINT PUSH SIDE DOOR & FRAME (P1)
2. PAINT PUSH SIDE DOOR & FRAME (P3)
3. MOTORIZED
4. PAINT PUSH/ PULL SIDE DOOR (P5) & FRAME (P1)
5. TRAFFIC DOOR – PAIR OF DOORS
6. DOOR TO HAVE 1" UNDERCUT
7. FACTORY FINISH
8. PAINT PUSH/ PULL SIDE DOOR & FRAME (P1)
9. 6"x24" VISION PANEL, PAINT WINDOW FRAME (P1)
10. PAINT DOOR FRAME (P1)
11. DOOR TO BE PROVIDED WITH 9"x30" VISION PANEL BY MFR
12. A READILY VISIBLE DURABLE SIGN TO BE POSTED ON THE EGRESS SIDE ON OR ADJACENT TO THE DOOR STATING : "THIS DOOR TO REMAIN UNLOCKED WHEN BUILDING IS OCCUPIED." THE SIGN SHALL BE IN LETTERS 1" HIGH ON CONTRASTING BACKGROUND.
13. PAINT INTERIOR (P3)
14. DOOR FINISH TO BE CLEAR ANODIZED
15. PROVIDE MARBLE THRESHOLD

BUILDING CODE DATA:

Exit doors shall be capable of opening without the use of a key or any special knowledge or effort. Building Code 1003.3.1.8

The width and height of required exit doorways shall be not less than 3 feet in nominal width by 6 feet 8 inches in nominal height and shall be capable of opening such that the clear width is not less than 32 inches. Building Code 1003.3.1.3

ROOM FINISH SCHEDULE

	ROOM NAME	WALLS – RE: NOTE 1: 1	2	3	4	FLR	BASE	CEIL	CEIL. HGT.	REMARKS
100	ENTRANCE	W6 P1	W6 P1	—	—		V2	**	VARIES	** (A1) AND GWB RE: SECTION 1/A–5.1 FOR CEILING HEIGHTS
101	RETAIL AREA *	W6 P1	W6 P1	W6 P1	W6 P1		V2	A1	11'–11"	(C4) (V3) RE: SHEET A–7.3
102	CHECKOUT *	W6 P1	—	—	—		V2	A1	11'–11"	(C2) RE: SHEETS F–1 AND A–7.3; RE: NOTE #4 BELOW
103	PHOTO LAB *	P4	—	—	P4		V2	A1	11'–11"	(V4) ON MILLWORK ONLY
104	WALK–IN COOLER	—	—	—	—	P6	—	—	OPEN	
105	MANAGER OFFICE *	W3	W3	W3	W3		V2	A1	8'–0"	
106	EMPLOYEE *	W3	W3	W3	W3		V2	GWB	8'–0"	PAINT GWB CEILING (P1)
107	MEN *	W2	W2	W2	W2	T1	T1	GWB	8'–0"	PAINT GWB CEILING (P1)
108	WOMEN *	W2	W2	W2	W2	T1	T1	GWB	8'–0"	PAINT GWB CEILING (P1)
109	HALL *	W2 W3	W2 W3	W2 W3	W2 W3		V2	GWB	8'–0"	PAINT GWB CEILING (P1)
110	PHARMACY *	P1	P1	P1 P4	P1 P4		V2	A1	9'–0"	
111	℞ SEATING *	W4 W5	W5	W4 W5	W4 W5		V2	A1	9'–0"	
112	RECEIVING AREA *	W1 P3	P3	W1 P3	W1 P3	P6	—	—	OPEN	ALL GWB WALLS TO RECEIVE (W1) TO 4'–0" AFF DO NOT PAINT (W1)
113	STAIR	W1 P3	P3	P3	P3	P2	—	—	OPEN	TILE GWB WALL TO RECEIVE (W1) TO 4'–0" AFF DO NOT PAINT (W1)
114	JANITOR	W2 P3	W2 P3	—	—	P6	—	P3	11'–0"	
200	MEZZANINE	W1 P3	P3	W1 P3	P3	P6	—	—	OPEN	ALL GWB WALLS TO RECEIVE (W1) TO 4'–0" AFF DO NOT PAINT (W1)

* REFER TO INTERIOR ELEVATIONS SHEETS A–4.2, A–6.1, A–6.3, AND A–6.4

FINISH NOTES:
1. WALLS ARE NUMBERED STARTING WITH THE FRONT WALL AS #1, AND THEN ROTATE COUNTER–CLOCKWISE.
2. ALL COLUMNS TO BE PAINTED.

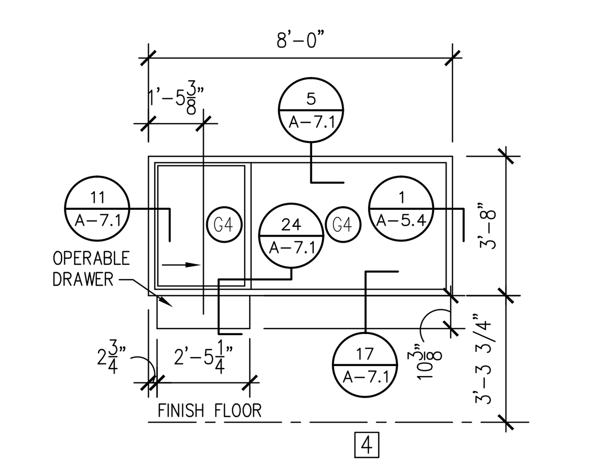

DOOR TYPE

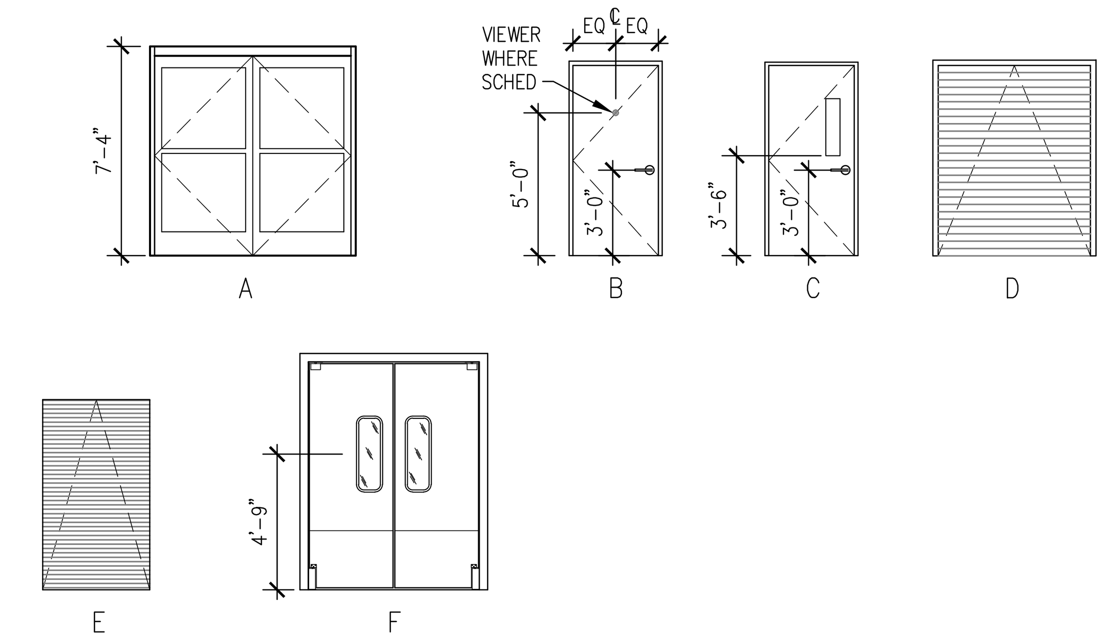

NOTE:
1. FIELD VERIFY DIMENSIONS PRIOR TO FABRICATION
2. RE: EXTERIOR FINISH SCHEDULE, SHEET A–4.1

NOTE: REFER TO SPECIFICATIONS FOR ADDITIONAL EIFS DETAILS & INFORMATION

1 / A–7.2 SCHEDULES & DETAILS
1–1/2" = 1'–0"

ROBERT KUBICEK Architects And Associates, Inc.
18662 MacArthur Blvd. Ste.200
Irvine, California 92612
(949) 798-3838
www.rkaa.com

LICENSED ARCHITECT
CRAIG JOHNSON
NO. C12434
STATE OF CALIFORNIA

COPYRIGHT 2011 , ALL RIGHTS RESERVED. ROBERT KUBICEK ARCHITECTS AND ASSOC, INC. THIS DRAWING IS AN INSTRUMENT OF SERVICE. IT IS THE PROPERTY OF ROBERT KUBICEK ARCHITECTS AND ASSOC, INC. AND MAY NOT BE REPRODUCED, OR REPRODUCTION HERE OF USED, WITHOUT WRITTEN PERMISSION OF THE ARCHITECT.

date:	
10/4/10	Bldg. Dept. Submittal
10/15/10	Health Dept. Submittal
1/6/11	Chattel Architecture Submittal
1/27/11	Chattel Architecture Submittal

NOTICE OF ALTERNATE BILLING OR PAYMENT CYCLE: THIS CONTRACT MAY ALLOW THE OWNER TO REQUIRE THE SUBMISSION OF BILLINGS OR ESTIMATES IN BILLING CYCLES OTHER THAN THIRTY DAYS. THIS CONTRACT MAY ALLOW THE OWNER TO MAKE PAYMENT ON SOME ALTERNATIVE SCHEDULE AFTER CERTIFICATION AND APPROVAL OF BILLING AND ESTIMATES. A WRITTEN DESCRIPTION OF SUCH OTHER BILLING AND/OR CYCLE APPLICABLE TO THE PROJECT IS AVAILABLE FROM THE OWNER AT THE OFFICES OF

OR HIS DESIGNATED AGENT SHALL PROVIDE THIS WRITTEN DESCRIPTION ON REQUEST

DEVELOPER:
CHARLES COMPANY
9034 W. SUNSET BLVD.
WEST HOLLYWOOD
CA 90069
TEL (310) 247-0900
FAX (310) 247-1525

CVS pharmacy
STORE #4524
909 S. ATLANTIC BLVD
LOS ANGELES, CA

design RKA
drawn RKA
check RKA

sheet A-7.2
of
job 09151

1/27/2011 6:20:26 PM

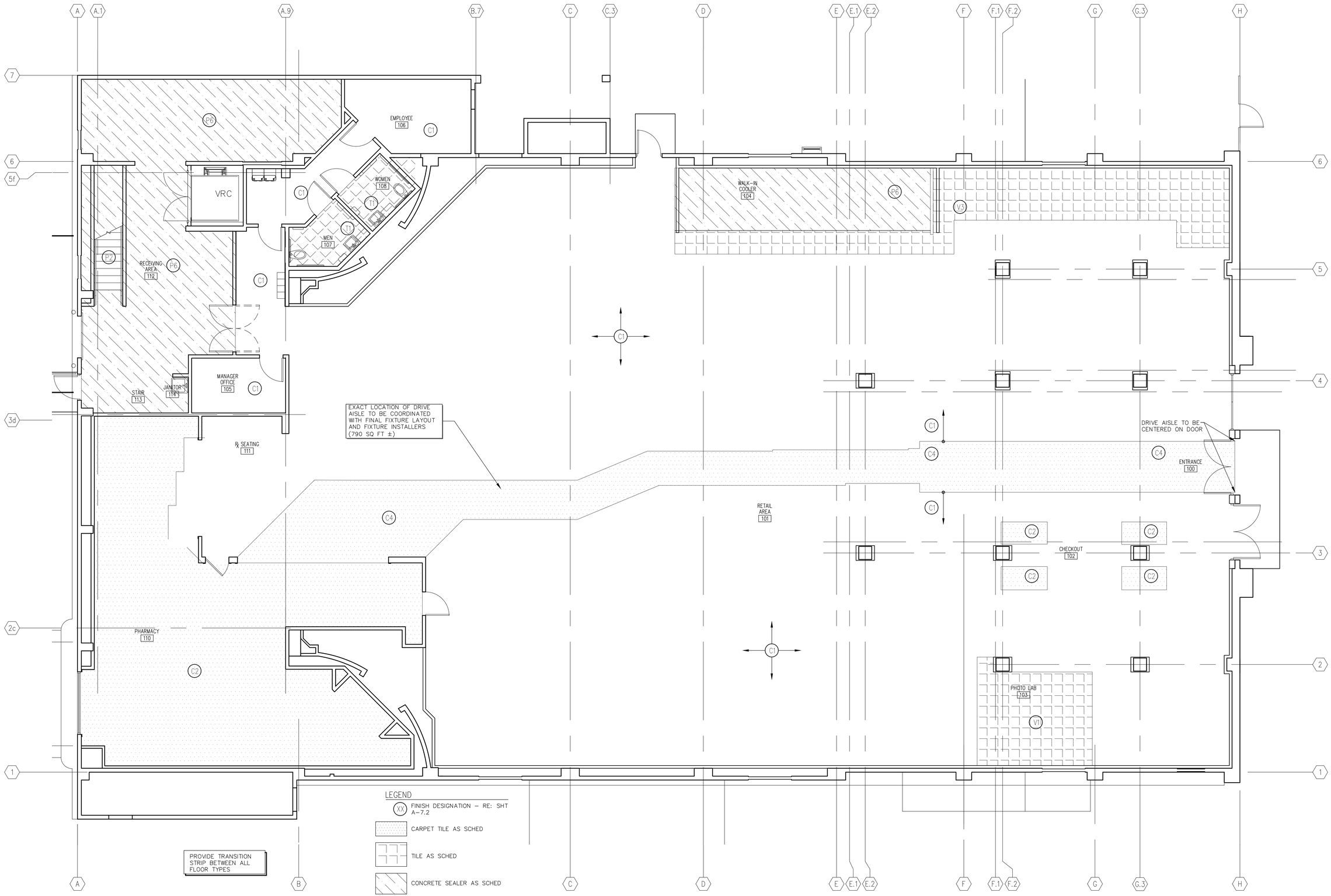

1 A-7.3 FLOOR FINISH PLAN
SCALE: 3/16" = 1'-0"

1/27/2011 3:41:50 PM

ROBERT KUBICEK
Architects And Associates, Inc.
18662 MacArthur Blvd.
Ste.200
Irvine, California 92612
(949) 798-3838
www.rkaa.com

LICENSED ARCHITECT
CRAIG JOHNSON
NO. C12434
STATE OF CALIFORNIA

COPYRIGHT 2011 ALL RIGHTS RESERVED. ROBERT KUBICEK ARCHITECTS AND ASSOC. INC. THIS DRAWING IS AN INSTRUMENT OF SERVICE. IT IS THE PROPERTY OF ROBERT KUBICEK ARCHITECTS AND ASSOC. INC. AND MAY NOT BE REPRODUCED, OR REPRODUCTION HERE OF USED, WITHOUT WRITTEN PERMISSION OF THE ARCHITECT.

date:	
10/4/10	Bldg. Dept. Submittal
10/15/10	Health Dept. Submittal
1/6/11	Chattel Architecture Submittal
1/27/11	Chattel Architecture Submittal

NOTICE OF ALTERNATE BILLING OR PAYMENT CYCLE: THIS CONTRACT MAY ALLOW THE OWNER TO REQUIRE THE SUBMISSION OF BILLINGS OR ESTIMATES IN BILLING CYCLES OTHER THAN THIRTY DAYS. THIS CONTRACT MAY ALLOW THE OWNER TO MAKE PAYMENT OR SOME ALTERNATIVE SCHEDULE AFTER CERTIFICATION AND APPROVAL OF BILLING AND ESTIMATES. A WRITTEN DESCRIPTION OF SUCH OTHER BILLING AND/OR CYCLE APPLICABLE TO THE PROJECT IS AVAILABLE FROM THE OWNER AT THE OFFICES OF

OR HIS DESIGNATED AGENT SHALL PROVIDE THIS WRITTEN DESCRIPTION ON REQUEST.

DEVELOPER:
CHARLES COMPANY
9034 W. SUNSET BLVD.
WEST HOLLYWOOD
CA 90069
TEL (310) 247-0900
FAX (310) 247-1525

CVS pharmacy
STORE #4524
909 S. ATLANTIC BLVD
LOS ANGELES, CA

design RKA
drawn RKA
check RKA

sheet A-7.3
of
job 09151

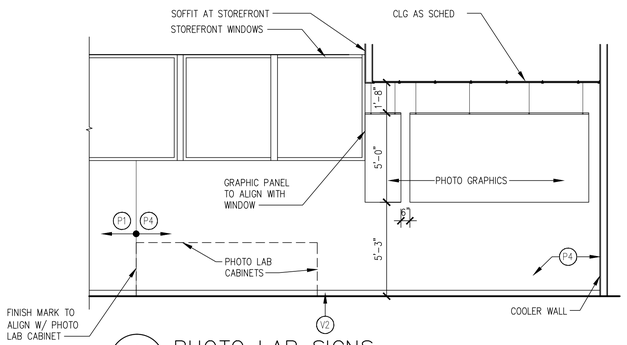

1 A-8.1 PHOTO LAB SIGNS
SCALE: 1/4" = 1'-0"

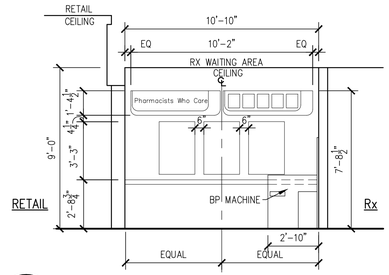

2 A-8.1 PHARMACY WAITING AREA SIGNS
SCALE: 1/4" = 1'-0"

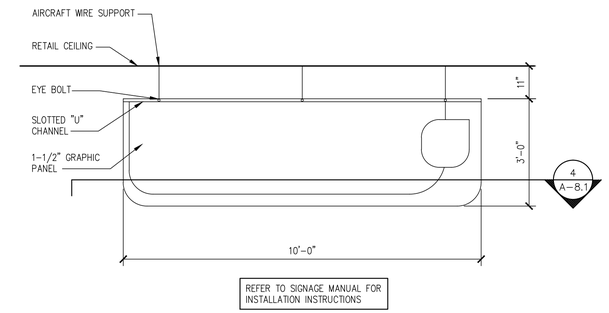

3 A-8.1 GRAPHIC PANELS ELEVATION (TYP)
SCALE: 1/2" = 1'-0"

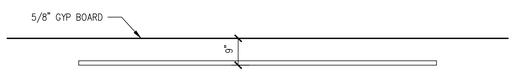

4 A-8.1 GRAPHIC PANELS SECTION (TYP)
SCALE: 1/2" = 1'-0"

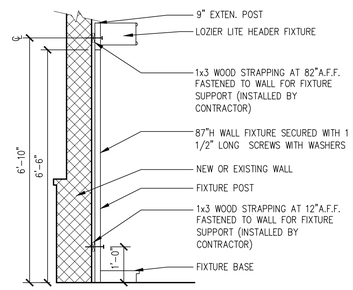

5 A-8.1 WALL UNIT SUPPORT DETAIL LOZIER FIXTURE
SCALE: 1/2" = 1'-0"

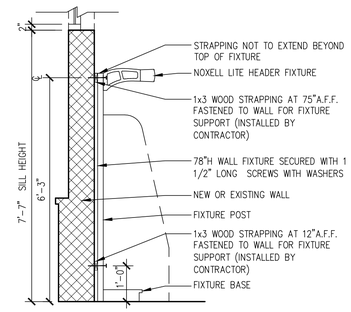

6 A-8.1 WALL UNIT SUPPORT DETAIL NOXELL FIXTURE
SCALE: 1/2" = 1'-0"

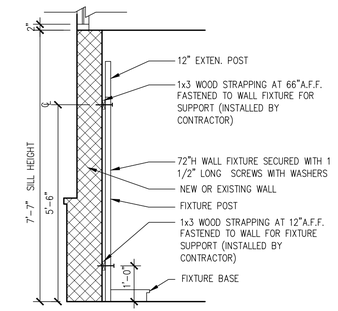

7 A-8.1 WALL UNIT SUPPORT DETAIL LOZIER FIXTURE
SCALE: 1/2" = 1'-0"

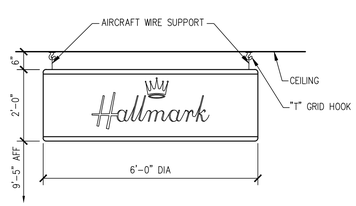

8 A-8.1 HALLMARK SIGNAGE DETAIL
SCALE: 1/2" = 1'-0"

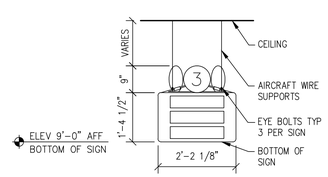

9 A-8.1 AISLE GUIDE SUSPENSION DETAIL
SCALE: 1/2" = 1'-0"

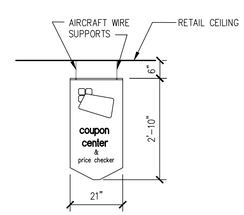

10 A-8.1 COUPON/ PRICE SIGNAGE DETAIL
SCALE: 1/2" = 1'-0"

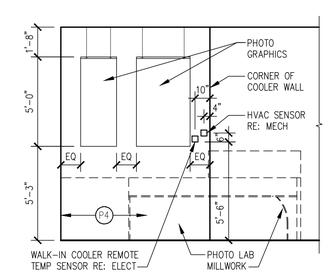

11 A-8.1 PHOTO LAB SIGNS
SCALE: 1/4" = 1'-0"

SIGNAGE DETAILS

18662 MacArthur Blvd.
Ste.200
Irvine, California 92612
(949) 796-3838
www.rkaa.com

ROBERT KABICEK
Architects And Associates, Inc.

LICENSED ARCHITECT
CRAIG JOHNSON
NO. C12434
STATE OF CALIFORNIA

COPYRIGHT 2011 ALL RIGHTS RESERVED.
THIS DOCUMENT, AND THE INFORMATION CONTAINED THEREIN, IS AN INSTRUMENT OF SERVICE, IT IS THE PROPERTY OF ROBERT KABICEK ARCHITECTS, AND MAY NOT BE USED OR REPRODUCED WITHOUT OR REPRODUCTION HERE OF USED WITHOUT WRITTEN PERMISSION OF THE ARCHITECT.

date:	
10/4/10	Bldg. Dept. Submittal
10/15/10	Health Dept. Submittal
1/6/11	Chattel Architecture Submittal
1/27/11	Chattel Architecture Submittal

NOTICE OF ALTERNATE BILLING OR PAYMENT CYCLE: THIS CONTRACT MAY ALLOW THE OWNER TO SECURE THE SUBMISSION OF BILLINGS ON A MONTHLY BASIS, RATHER THAN ON THE THIRTY-DAYS. THIS CONTRACT MAY ALLOW THE OWNER TO MAKE PAYMENT ON SOME ALTERNATIVE FORCEOUT BASIS, RATHER THAN ON THE BASIS OF THE ACTUAL AND ESTIMATED. A WRITTEN DESCRIPTION OF SUCH BILLING AND/OR CYCLE APPLICABLE TO THE PROJECT IS AVAILABLE FROM THE OWNER AT THE OFFICES OF

OR HIS DESIGNATED AGENT SHALL PROVIDE THIS WRITTEN DESCRIPTION ON REQUEST.

DEVELOPER:
CHARLES COMPANY
9034 W. SUNSET BLVD.
WEST HOLLYWOOD
CA 90069
TEL (310) 247-0900
FAX (310) 247-1525

cvs pharmacy
STORE #4524
909 S. ATLANTIC BLVD
LOS ANGELES, CA

design RKA
drawn RKA
check RKA

sheet A-8.1 of
job 09151

1/27/2011 3:42:25 PM

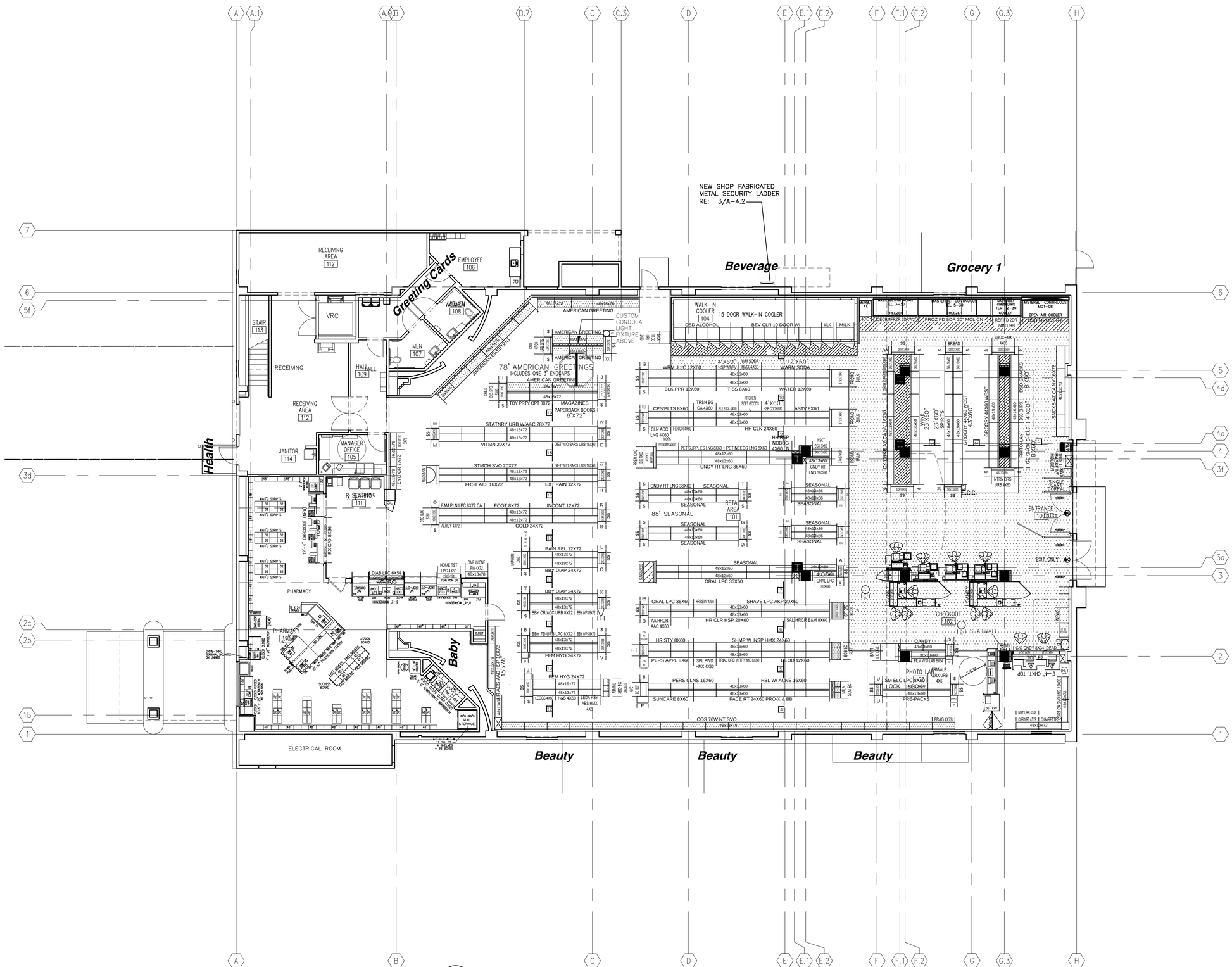

1 F-1 FIXTURE PLAN

SCALE: 1/8"=1'-0"

1/31/2011 10:29:23 AM

S.H. INTERIOR IMPROVEMENT(S) A PART OF SHELL PERMIT.

T.I. INTERIOR IMPROVEMENT(S) NOT A PART OF SHELL PERMIT, FOR INFORMATIONAL PURPOSES ONLY.

NOTES BY SYMBOL

1. NON PASSENGER VRC AND POWER UNIT
2. 4"ø PIPE BOLLARD – RE: 4/A-6.2 AND EXTERIOR FINISH SCHEDULE.
3. FACE OF SOFFIT / VALANCE ABOVE – RE: WALL SECTIONS.
4. ROOF LINE ABOVE.
5. 6"ø PIPE BOLLARD – RE: 4/A-6.2 AND EXTERIOR FINISH SCHEDULE.
6. COILING GRILLE
7. 6" THICK CONCRETE PAD FOR COMPACTOR AND LOADING AREA – RE: STRUCTURAL DRAWINGS. (SEE CIVIL)
8. COMPACTOR. (SEE CIVIL)
9. COMPACTOR ENCLOSURE (SEE CIVIL)
10. (NOT USED)
11. (NOT USED)
12. GAS METER
13. ELECTRIC DISCONNECT & METER BY UTILITIES COMPANY – RE: ELECTRICAL DRAWINGS.
14. ELECTRICAL DISCONNECT – RE: ELECTRICAL DRAWINGS.
15. (NOT USED)
16. CABINET BY MILLWORK SUPPLIER – RE: FIXTURE PLAN F-1
17. FIRE RISER
18. VRC GATES BY VRC MANUFACTURER
19. KNOX BOX IF REQUIRED. MOUNT PER FIRE DEPARTMENT REQUIREMENTS.
20. NEW OPENING IN EXISTING WALL.
21. SITE ACCESSIBILITY SIGN. RE: 8/AS-1.2 (SEE CIVIL)
22. VRC TO HAVE MIN 8'-7 1/2" VERTICAL CLEARANCE TO 4'-0" IN FRONT OF GATE
23. VRC GATES AND POWER UNIT BY VRC MANUFACTURER

LEGEND

[X] WINDOW DESIGNATION RE: SHT A-7.2

(X) INDICATES DOOR-RE: SHT A-7.2 FOR DOOR SCHEDULE

PARTITION TYPE – RE: SHT A-1.2

FLOOR PLAN NOTES THIS SHT

3a – – MOMENT FRAME COLUMN

3 – – COLUMN

BUILDING CODE DATA:

The width and height of required exit doorways shall be not less than 3 feet in nominal width by 6 feet 8 inches in nominal height and shall be capable of opening such that the clear width is not less than 32 inches.
Building Code 1003.3.1.3

Illuminated exit signs shall be located as necessary to clearly indicate the direction of egress travel. Additional exit signs may be required at time of field inspection.
Building Code 1003.2.8.2

ROBERT KABICEK Architects And Associates, Inc.
18662 MacArthur Blvd. Ste.200
Irvine, California 92612
(949) 798-3838
www.rka.com

LICENSED ARCHITECT CRAIG JOHNSON NO. C12434 STATE OF CALIFORNIA

COPYRIGHT 2007 ALL RIGHTS RESERVED. THIS DRAWING IS AN INSTRUMENT OF SERVICE. THIS DRAWING IS AN INSTRUMENT OF SERVICE, IT IS THE PROPERTY OF ROBERT KABICEK ARCHITECTS, AND MUST BE RETURNED UPON REQUEST. NO REPRODUCTION, REUSE OF USE, WITHOUT WRITTEN PERMISSION OF THE ARCHITECT.

date:	
10/4/10	Bldg. Dept. Submittal
10/15/10	Health Dept. Submittal

NOTICE OF ALTERNATE BILLING OR PAYMENT CYCLE: IF THE CONTRACTOR ELECTS TO BILL OR REQUIRE THE SUBMISSION OF BILLINGS OR ESTIMATES IN BILLING CYCLES OTHER THAN MONTHLY, OR TO MAKE PAYMENT ON THE BASIS OF PARTIAL OR MAKE PAYMENT ON THE BASIS OF PARTIAL OR ALTERNATE BILLING CYCLES, THE CONTRACTOR MUST SUBMIT BILLINGS AND ESTIMATES. A WRITTEN DESCRIPTION OF SUCH BILLING OR PAYMENT CYCLE APPLICABLE TO THE PROJECT IS AVAILABLE FROM THE OWNER AT THE OFFICES OF

OR HIS DESIGNATED AGENT SHALL PROVIDE THIS WRITTEN DESCRIPTION ON REQUEST.

DEVELOPER:
CHARLES COMPANY
9034 W. SUNSET BLVD.
WEST HOLLYWOOD
CA 90069
TEL (310) 247-0900
FAX (310) 247-1525

CVS pharmacy
STORE #4524
909 S. ATLANTIC BLVD
LOS ANGELES, CA

design	RKA
drawn	RKA
check	RKA
sheet	F-1
job	09151

Abbreviation	Meaning
&	AND
@	AT
ø	DIAMETER
A.B.	ANCHOR BOLT
A.C.I.	AMERICAN CONCRETE INSTITUTE
A.I.S.C.	AMERICAN INSTITUTE OF STEEL CONSTRUCTION
ALT.	ALTERNATE
ASSN.	ASSOCIATION
APPROX.	APPROXIMATELY
ARCH.	ARCHITECTURAL
A.S.T.M.	AMERICAN STANDARD FOR TESTING AND MATERIALS
A.W.S.	AMERICAN WELDING SOCIETY
(B), BOT.	BOTTOM
BET.	BETWEEN
BF	BRACED FRAME
BLDG.	BUILDING
BLK.	BLOCK
BLKG	BLOCKING
BM	BEAM
B.N.	BOUNDARY NAILING
B.S.	BOTH SIDES
C	CHANNEL OR CAMBER
CANT	CANTILEVER
CAT.	CATALOG
C.B.C.	CALIFORNIA BUILDING CODE
C.I.P.	CAST-IN-PLACE CONCRETE
C.J.	CONSTRUCTION JOINT OR CEILING JOIST
℄ . CL.	CENTERLINE
CLG.	CEILING
CLR.	CLEAR
C.M.U.	CONCRETE MASONRY UNIT
CO.	COMPANY
COL.	COLUMN
CONC.	CONCRETE
CONST.	CONSTRUCTION
CONT.	CONTINUOUS
CRIP.	CRIPPLE
CTR.	CENTER
CU.FT.	CUBIC FEET
CU.IN.	CUBIC INCH
CU.YD.	CUBIC YARD
d_b	BAR DIAMETER
DBL.	DOUBLE
DET.	DETAIL
DIA.	DIAMETER
DIAG.	DIAGONAL
DIM.	DIMENSION
D.L.	DEAD LOAD
DN.	DOWN
DO.	DITTO
DWG.(S)	DRAWING(S)
(E)	EXISTING
EA.	EACH
EE.	EACH END
E.F.	EACH FACE
E.J.	EXPANSION JOINT
EL.	ELEVATION
ELEV.	ELEVATOR
EMBED.	EMBEDMENT
E.N.	EDGE NAILING
ENGR.	ENGINEER
ENGRG.	ENGINEERING
EQ.	EQUAL
EQUIP.	EQUIPMENT
E.S.	EACH SIDE
ETC	ET CETERA
E.W.	EACH WAY
E-W	EAST-WEST
EXP.	EXPANSION
EXT.	EXTERIOR
F.D.	FLOOR DRAIN
FDN.	FOUNDATION
F.F.	FINISH FLOOR
F.G.	FINISH GRADE
FIN.	FINISH
F.J.	FLOOR JOIST
FLG.	FLANGE
FLR.	FLOOR
F.O.	FACE OF
F.O.C.	FACE OF CONCRETE
F.O.M.	FACE OF MASONRY
F.O.S.	FACE OF STUD
F.P.	FULL PENETRATION
FT.	FEET OR FOOT
FTG.	FOOTING
GA.	GAUGE
GALV.	GALVANIZED
G.B.	GRADE BEAM
GLB	GLU-LAM BEAM
GYP. BD.	GYPSUM BOARD
(H)	HIGH
HDR	HEADER
HGR	HANGER
HORIZ.	HORIZONTAL
H.S.B.	HIGH STRENGTH BOLT
HT.	HEIGHT
I.C.B.O.	INTERNATIONAL CONFERENCE OF BUILDING OFFICIALS
I.D.	INSIDE DIAMETER
IN.	INCH(ES)
INFO.	INFORMATION
INT.	INTERIOR
JT.	JOINT
JST.	JOIST
K.	KIP (1,000 LBS)
K/FT, K/'	KIPS PER FOOT
KSI	KIPS PER SQUARE INCH
(L)	LOW
LG.	LONG
LIN.	LINEAR
L.L.	LIVE LOAD
LONGIT.	LONGITUDINAL
L.S.	LAG SCREW
LT.WT.	LIGHT WEIGHT
M.B.	MACHINE BOLT
M.D.	MID-DEPTH
MATL.	MATERIAL
MAX.	MAXIMUM
MECH.	MECHANICAL
MEMB.	MEMBRANE
MFR.	MANUFACTURER
MIN.	MINIMUM
MISC.	MISCELLANEOUS
MTL.	METAL
(N)	NEW
N.A.	NEUTRAL AXIS
NO., #	NUMBER
N-S	NORTH-SOUTH
N.T.S.	NOT TO SCALE
O.C., O/C	ON CENTER
O.D.	OUTSIDE DIAMETER
O.F.	OUTSIDE FACE
OPNG.	OPENING
ORIG.	ORIGINAL
PL.	PLATE OR PROPERTY LINE
PLYWD.	PLYWOOD
P.S.F., psf	POUNDS PER SQUARE FOOT
P.S.I., psi	POUNDS PER SQUARE INCH
P.T.	POST-TENSIONING
R.	RADIUS
R.D.	ROOF DRAIN
REF.	REFERENCE
REINF.	REINFORCE(D) / REINFORCING
REQD.	REQUIRED
R.R.	ROOF RAFTER
S.A.D.	SEE ARCHITECTURAL DRAWINGS
SCHED.	SCHEDULE
SEC.	SECTION
SHT.	SHEET
SIM.	SIMILAR
S.J.	SLAB JOINT
S.O.G.	SLAB-ON-GRADE
SPECS.	SPECIFICATIONS
SQ.	SQUARE
STAG.	STAGGER(ED)
STD.	STANDARD
STIFF	STIFFENER
ST'L	STEEL
STR.	STRAIGHT
SYM.	SYMMETRICAL
(T)	TOP
T & B	TOP AND BOTTOM
T & G	TONGUE AND GROOVE
THK	THICK
T.J.	TRUS JOIST
T.O.C.	TOP OF CONCRETE
T.O.F.	TOP OF FOOTING
T.O.S.	TOP OF SLAB(STEEL)
TS	STRUCTURAL TUBE
TRANS.	TRANSVERSE
TYP.	TYPICAL
U.B.C.	UNIFORM BUILDING CODE
U.N.O.	UNLESS NOTED OTHERWISE
VERT.	VERTICAL
VARI.	VARIOUS
W/	WITH
WD	WOOD
W/O	WITHOUT
W.J.	WALL JOINT
W.P.M.	WATERPROOF MEMBRANE
WT.	WEIGHT
W.W.F.	WELDED WIRE FABRIC

ABBREVIATIONS 1

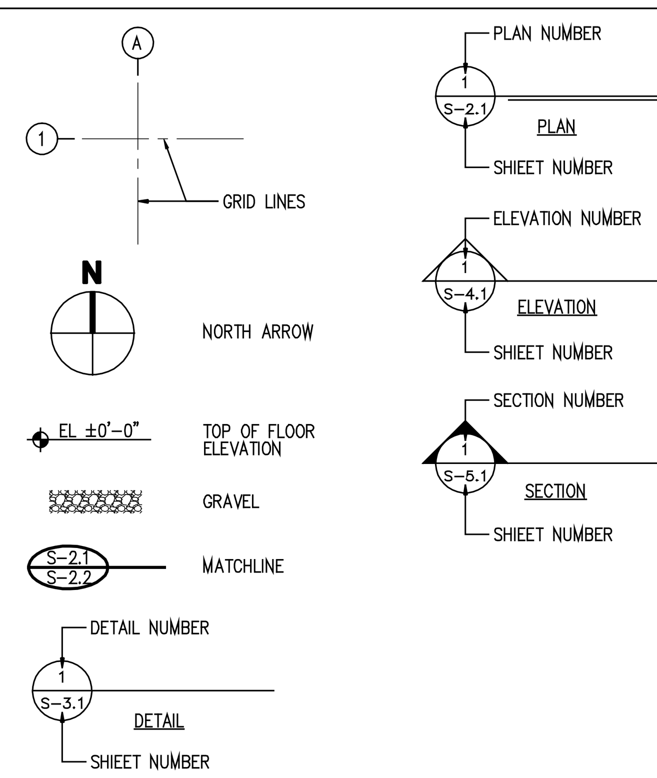

MISCELLANEOUS SYMBOLS 2

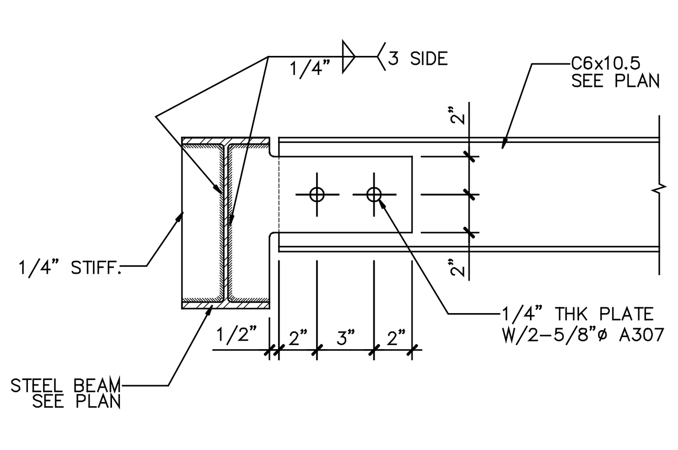

(E)CONC. WALL TO (N)ROOF DECK CONNECTTION 3

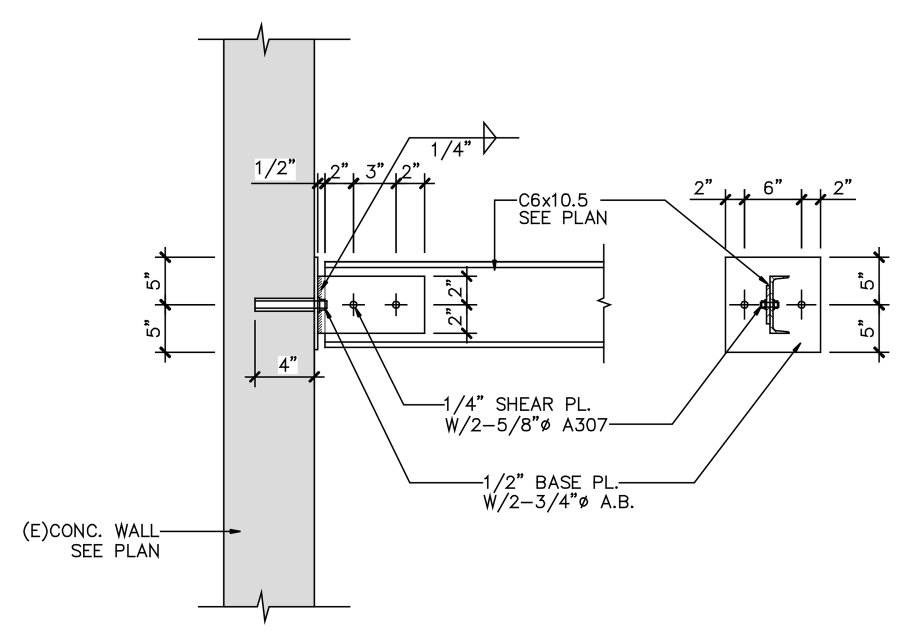

(E)CONC. WALL TO (N)ST'L CAL CONNECTTION 4

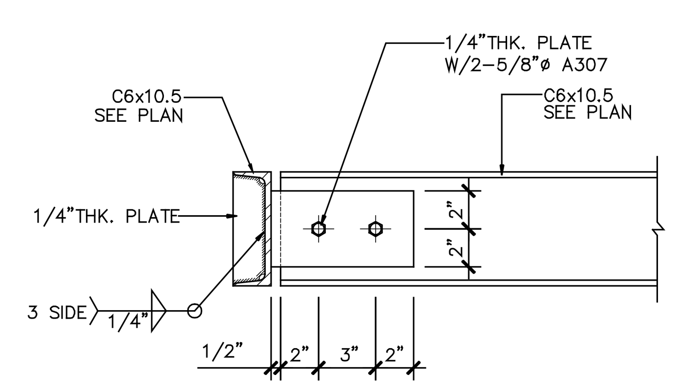

ST'L. CHANNEL TO ST'L. CHANNEL CONNECTION 5

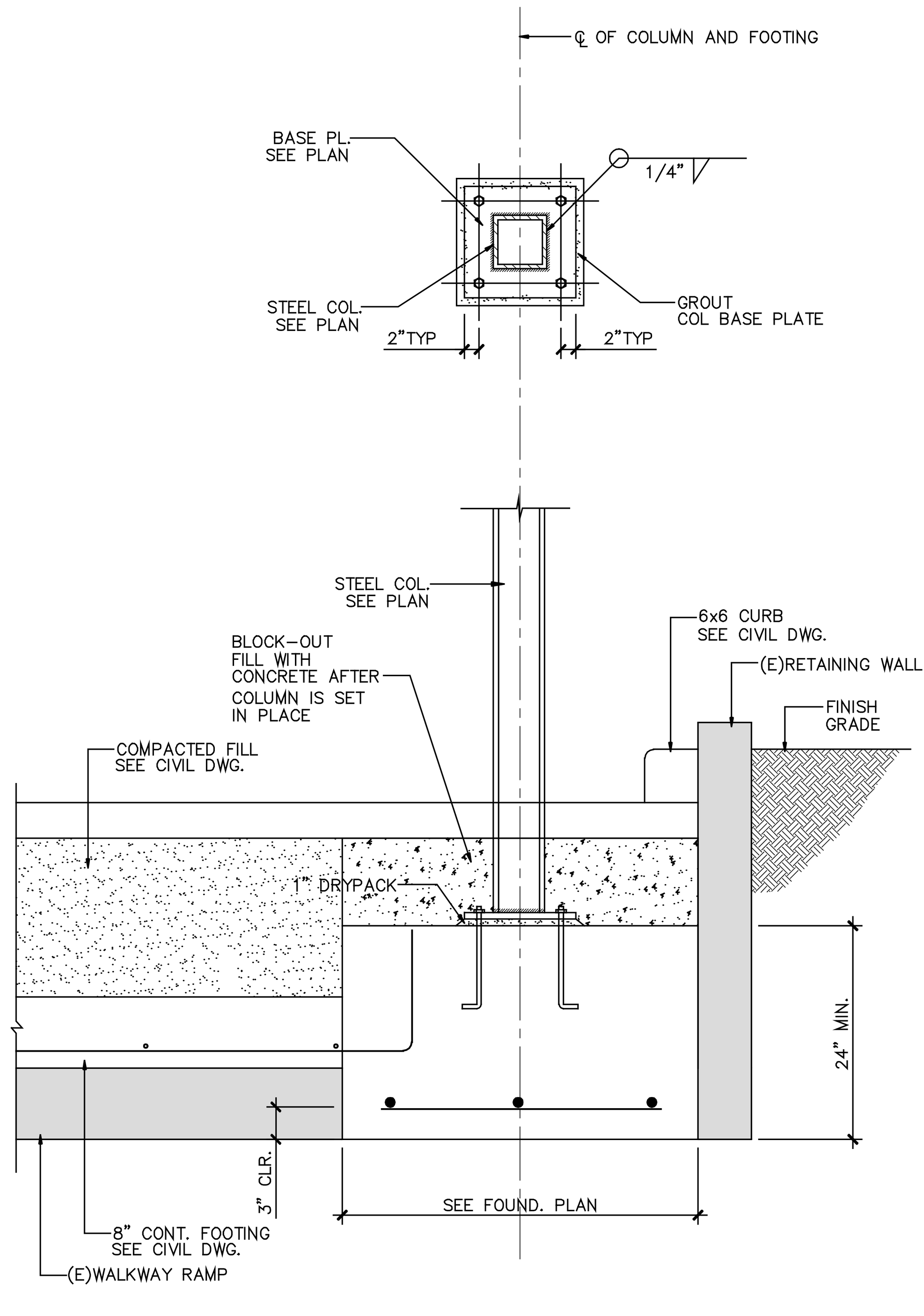

* SPECIAL INSPECTION REQUIRED.

STEEL COL. & FOOTING CONNECTTION 6

GENERAL NOTES

1. ALL WORK SHALL CONFORM TO THE LABC 2008.
2. THE FOLLOWING NOTES AND ALL OTHER TYPICAL DETAILS APPLY TO ALL DRAWINGS UNLESS NOTED OTHERWISE.
3. STRUCTURAL DRAWINGS SHALL BE USED IN CONJUNCTION WITH ARCHITECTURAL, MECHENICAL AND ELECTRICAL DRAWINGS.
4. FRAMING CONDITIONS NOT SPECIFICALLY SHOWN SHALL BE FRAMED SIMILAR TO THE DETAILS SHOWN FOR THE RESPECTIVE MATERIALS.
5. PROVIDE OPENINGS AND SUPPORTS FOR MECHANICALS EQUIPMENT, DUCTS, PIPING, VENTS AND ETC., AS REQUIRED. REFER TO ARCHITECTURAL AND MECHANICAL DRAWINGS FOR ADDITIONAL OPENINGS AND EQUIPMENT WHICH ARE NOT SHOWN ON STRUCTURAL DRAWINGS. ALL SUSPENDED EQUIPMENT TO BE PROVIDED WITH APPROVED ALL BRACING.
6. CONTRACTOR MUST CLARIFY ALL DIMENSIONS AND SITE CONDITIONS BEFORE COMMENCING WORK. ARCHITECTURE SHALL BE INFORMED AND NOTIFIED ANY TYPE OF DISCREPANCIES.
7. NOTES AND DETAILS ON DRAWINGS SHALL TAKE PRECEDENCE OVER THESE GENERAL NOTES.
8. DESIGN MATERIALS, EQUIPMENT, AND PRODUCTS OTHER THAN THOSE DESCRIBED BELOW OR INDICATED ON THE DRAWINGS MAY BE CONSIDERED FOR USE. PROVIDED PRIOR TO APPROVAL IS OBTAINED FROM THE OWNER, ARCHITECT/ENGINEER, AND THE APPLICABLE GOVERNING CODE AUTHORITY.
9. CONTINOUS INSPECTION BY A LOS ANGELES CITY LICENSED DEPUTY INSPECTOR IS REQUIRED FOR ALL STRUCTURAL CONNECTIONS, FOOTINGS, GRADE BEAMS, AND RETAINING WALLS DURING INSTALLATION.
10. DESIGN CRITERIA
    FLOOR LIVE LOADS
    ROOF LIVE LOADS
    WIND DESIGN DATA
    BASIC WIND SPEED: 100 mph
    WIND IMPORTANCE FACTOR: 1.15
    WIND EXPOSURE
    EACH DIRECTION: B
    INTERNAL PRESSURE COEFFICIENT: +/- 0.18
    COMPONENTS AND CLADDING
    EARTHQUAKE DESIGN DATA
    SEISMIC IMPORTANCE FACTOR (I): 1.25
    OCCUPANCY CATEGORY: III
    MAPPED SPECTRAL RESPONSE ACCELERATIONS
    Ss : 1.966g
    S1 : 0.674g
    SITE CLASS: D
    SPECTRAL RESPONSE COEFFICIENTS
    SPECTRAL RESPONSE COEFFICIENTS
    SDS : 1.311
    SD1 : 0.674
    SEISMIC DESIGN CATEGORY : D
    SEISMIC FORCE RESISTING SYSTEM
    BUILDING FRAMING SYSTEM
    SPECIAL CONCRETE SHEAR WALLS : R=6.0
    DESIGN BASE SHEAR: lb
    TOTAL WEIGHT: lb
    EQUIVALENT LATERAL FORCE PROCEDURE
    REDUNDANCY FACTOR USED: 1.0

FOUNDATIONS

1. ALLOWABLE FOUNDATION PRESSURE USED IN THE DEVELOPMENT AND DESIGN OF FOOTING IS SHOWN AT THE SOIL REPORT AND SEE PLAN.
2. SOIL REPORT WAS PREPARED BY (CO. NAME) "ADVANCED GEOENGINEERING, INC." (FILE NO.) J.N. CVS-1-01 (DATE) SEPTEMBER 13, 2010 (TEL.) 949-677-4697
3. ALL EARTH WORK SHALL BE DONE ACCORDING TO SOILS REPORT ATTATCHED.
4. FOUNDATIONS SHALL BE THE SIZE AND TYPE AS INDICATED ON THE DRAWINGS.
5. ALL EXCAVATIONS ARE TO BE INSPECTED AND APPROVED BY A SOILS ENGINEER PRIOR TO THE PLACEMENT OF ANY FILL OR REINFORCING STEEL.
6. SUB SOIL BELOW SLABS AND FOOTINGS SHALL BE PRESOAKED FOR 48 HOURS PRIOR TO PLACING CONCRETE.
7. CONCRETE CONTRACTOR TO INSURE A TRUE LEVEL FOUNDATION PRIOR TO PLACING CONCRETE.
8. CONCRETE CONTRACTOR TO VERIFY AND LOCATE ALL DOOR OPENING AND AVOIDE PLACEMENT OF ANCHOR BOLTS IN THESE LOCATION.
9. ALL LUMBER IN CONTACT WITH CONCRETE SHALL BE PRESSURE TREATED.
10. THE CONCRETE CONTRACTOR SHALL BACKFILL ALL RETAINING WALLS.
11. CONCRETE CONTRACTOR TO FURNISH BOLTS, NETTING AND STEEL AS REQUIRED BY THE CONCRETE DETAILS AND DRAWING.
12. SEISMIC DESIGN SHALL BE BASED ON SOIL PROFILE TYPE SD, AS RECOMMENDED.
13. FOOTINGS SHALL BE EMBEDDED ENTIRELY EITHER ON NATURAL SOIL.
14. THE BUILDING DESIGN SHALL INCORPORATE PROVISIONS FOR ANTICIPATED DIFFERENTIAL SETTLEMENTS IN EXCESS OF ONE-FOURH INCH.
15. THE SOILS ENGINEER SHALL INSPECT ALL EXCAVATIONS TO DETERMINE THAT CONDITIONS ANTICIPATED IN THE REPORT HAVE BEEN ENCOUNTERED AND TO PROVIDE AND RECOMMENDATIONS FOR THE CORRECTION OF HAZARDS FOUND DURING FOUNDATION EXCAVATIONS.
16. ALL MAN-MADE FILL SHALL BE COMPACTED TO A MINIMUM 90 PERCENT OF MAXIMUM DRY DENSITY OF THE FILL MATERIAL PER THE LATEST VERSION OF ASTM D 1557. WHERE COHESION LESS SOIL BE HAVING LESS THAN 15 PERCENT FINER THAN 0.005 MILLIMETERS IS USED FOR FILL, IT SHALL BE COMPACTED TO MINIMUM OF 95 PERCENT RELATIVE COMPACTION BASED ON MAXIMUM DRY DENSITY. PLACEMENT OF GRAVEL IN LIEU OF COMPACTED FILL IS ALLOWED ONLY IF COMPLYING WITH SECTION 91.7011.3 OF THE CODE
17. PRIOR TO POURING OF CONCRETE, A REPRESENTATIVE OF THE CONSULTING SOILS ENGINEER SHALL INSPECT AND APPROVE THE FOOTING EXCAVATIONS.
18. A STRUCTURE SHALL BE CONSIDERED SURCHARGING AN EXCAVATION IF THE STRUCTURE IS LOCATED WITHIN A HORIZONTAL DISTANCE FROM THE TOP OF THE EXCAVATION EQUAL TO THE DEPTH OF THE EXCAVATION
19. ALL ROOF AND PAD DRAINAGE SHALL BE CONDUCTED TO THE STREET IN AN ACCEPTABLE MANNER
20. PRIOR TO EXCAVATION, AN INITIAL INSPECTION SHALL BE CALLED AT WHICH TIME THE SEQUENCE OF SHORING (IF REQUIRED) PROTECTION FENCES AND TRAFFIC CONTROL WILL BE SCHEDULED
21. IF ADVERSE SOIL CONDITIONS ARE ENCOUNTERED, A SOILS INVESTIGATION REPORT MAY BE REQUIRED.

CONCRETE

1. CEMENT SHALL BE PORTLAND CEMENT CONFORMING TO ASTM C-150, TYPE II, LOW ALKALI. 1 PART CEMENT, 2 1/2 PARTS SAND, 3 1/2 PARTS GRAVEL AND 7 1/2 GALLONS WATER PER SACK OF CEMENT fc'=4000 psi EXCEPT FOUNDATION.
2. AGGREGATES SHALL BE NATURAL SAND AND ROCK CONFORMING TO ASTM C-33.
3. REINFORCING STEEL, INTERMEDIATE GRADE ASTM 1-615 GRADE 60.
4. WELDED WIRE FABRIC SHALL CONFORM TO ASTM 1-185.
5. SPLICES OF HORIZONTAL REBAR IN WALLS AND FOOTHINGS SHALL BE STAGGERED.
6. DOWELS FOR WALL SHALL BE SAME SIZE AND SPACING AS THE WALL REINFORCEMENT AND SHALL LAP WITH THE WALL REBAR AS NOTED ABOVE UNLESS NOTED OTHERWISE.
7. ANCHOR BOLTS, DOWELS, INSERTS ETC. SHALL BE SECURELY TIED IN PLACE PRIOR TO THE POURING OF ANY CONCRETE OF GROUT.
8. WELDING OF REINFORCING STEEL SHALL CONFORM TO AWS D12-1 USING PROPER LOW HYDROGEN ELECTRODES.
9. ALL EXCAVATIONS SHALL BE FREE OF LOOSE DIRT, WATER OR DEBRIS PRIOR TO POURING CONCRETE.
10. ALL FORMS SHALL BE CONSTRUCTED AS TO MAINTAIN THE REQUIRED POSITION AND SHAPE DURING AND AFTER THE PLACING OF CONCRETE AND BE SUFFICIANTLY TIGHT TO PREVENT THE LEAKAGE OF CONCRETE.
11. NO PIPES OR DUCTS ARE TO BE PLACED IN CONCRETE SLABS OR WALLS UNLESS SPECIFICIALLY DETAILED.
12. ALL CONCERTE SHALL CONFORM TO THE LATEST EDITION OF THE UNIFORM BUILDING CODE.
13. ALL CONCRETE WHICH IS Fc'>2,500 psi SHALL HAVE SPECIAL INSPECTION PER SECTION 306 OF THE UNIFORM BUILDING CODE UNLESS NOTED OTHERWISE.
14. PNEUMATICALLY PLACED CONCRETE SHALL HAVE A-28-DAY STRENGTH OF 3000 psi MATERIALS, PROPORTIONING AND APLICATION, SHALL CONFORM WITH ACI STANDARD 506,2-77. THE CONCRETE SHALL BE PLACED BY A QUALIFIED CONTRACTOR AND UNDER CONTINUOUS INPECTION BY A REGISTERED DEPUTY BUILDING INSPECTOR.

METAL STUDS AND ACCESSORIES

MEET OR EXCEED MIN. REQUIREMENTS OF FED. SPEC. QQ-S-698 AND FED. SPEC. QQ-S-775d, FOR THE ITEM AND USE IN-TENDED METAL STUDS :

1. AT INTERNAL METAL STUD PARTITIONS, UNLESS OTHERWISE SHOWN ON THE DRAWINGS, PROVIDE STANDARD PUNCHED STEEL STUDS OF THE GAGES SHOWN ON THE DRAWINGS, EITHER HOT-DIP GALVANIZED OR FACTORY PRE-PAINTED.
2. USE ONLY ONE TYPE THROUGHOUT THE WORK, UNLESS OTHERWISE SHOWN ON THE DRAWINGS OR SPECIFICALLY APPROVED IN ADVANCE BY THE ARCHTECT OR ENGINEER ACCESSORIES :
   PROVIDE ALL ACCESSORIES INCLUDING, BUT NOT NECESSARILY LIMITED TO, TRACKS, CLIPS, ANCHORS, FASTENING DIVICES, SOUND ATTENUATION PENCIL RODS AND RESILIENT CLIPS, AND OTHER ACCESSORIES REQUIRED FOR A COMPLETE AND PROPER INSTALLATION, AND AS RECOMMENDED BY THE MANUFACTURER OF THE STEEL STUDS USED. ALL METAL STUDS AND SCREWS PROVIDED BY METAL SYSTEM (I.C.B.O. #4943)
3. ALL SCREWS COMPLY TO ICBO. NER-211

REINFORCING STEEL

1. ALL REINFORCING SHALL BE A.S.T.M. A-615-60 REGARDLESS OF BAR SIZE. WELDING WIRE FABRIC TO BE A.S.T.M. A-185, LAP 1-1/2 SPACES, 9"MIN. FOR STRUCTURAL SLABS.
2. ALL BARS SHALL BE DEFORMED AS PER A.S.T.M. A-305.
3. ALL BARS SHALL BE CLEAN OF LOOSE FLAKY RUST, GREASE OR OTHER MATERIALS LIKELY TO IMPAIR BOND.
4. ALL BENDS SHALL BE MADE COLD.
5. SPLICING OF BARS SHALL HAVE LAPPING OF 40 DIA. OR 2'-0" MIN. IN ALL CONTINUOUS REINFORCEMENT OF FOOTINGS AND CONCRETE WALLS, EXCEPT AS NOTED ON PLANS. MASONRY REINFORCEMENT SHALL HAVE LAPPINGS OF 40 DIAMETER OR 2' MIN.
6. ALL REINFORCING BARS SHALL BE ACCURATELY AND SECURELY PLACED BEFORE POURING CONCRETE.
7. CONCRETE PROTECTION FOR REINFORCEMENT SHALL BE BASED ON UBC-94. COVER SHALL BE AS:
   A. POURED AGAINST EARTH..................... 3"
   B. POURED AGAINST FORM BELOW GRADE.......... 2"
   C. FORMED SLABS............................ 1"
   D. SLABS ON GRADE (FROM TOP TO SLAB)........ 1"
   E. WALLS EXPOSED TO WEATHER................ 1"
   WALLS NOT EXPOSED TO WEATHER............ 1"
8. ALL FIELD WELDING OF REINFORCING STEEL REQUIRES CONTINUOUS INSPECTION BY A REGISTERED DEPUTY BUILDING INSPECTOR UNLESS NOTED OTHERWISE.
9. ALL FIELD WELDING OF REINFORCING STEEL SHALL BE PERFORMED BY WELDERS SPECIFICALLY CERTIFIED FOR REINFORCING STEEL.
10. MIN. RE-BAR SPACING KEEP 1.5d

STRUCTURAL STEEL

1. ALL STEEL SHALL CONFORM TO THE FOLLOWING

W-SHAPE	ASTM A992
	ASTM A913
PLATE, CHANNELS, ANGLES	ASTM A36
PIPES	ASTM A53
HOLLOW STRUCTURAL SECTION	ASTM A500
RECTANGULAR SECTION	46ksi
ROUND SECTION	42ksi
ANCHOR RODS	
STRUCTURAL STEEL NOTED (65)	ASTM A992(65ksi)
STRUCTURAL STEEL NOTED (36)	ASTM A36(36ksi)

2. ALL SHOP FABRICATION SHALL BE PERFORMED BY A FABRICATOR LICENSED BY THE LOS ANGELE BUILDING DEPARTMENT.
3. WELDING SHOULD CONFORM TO CITY OF LOS ANGELE AND THE LATEST AMERICAN WELDING SOCIETY AWS STANDARDS. WELDING SHALL BE PERFORMED BY A PROCESS APPROVED BY THE ENGINEER AND THE BUILDING DEPARTMENT.
4. ALL FIELD WELDING SHALL BE REQUIRED CONTINUOUS INSPECTION
5. FILLS SHALL BE PROVIDED AT SPLICES OF PARTS HAVING MORE THAN 1/8 INCH DIFFERENCE IN THICKNESS.
6. NO STRUCTURAL STEEL SHALL BE FABRICATED OR ERECTED UNTIL SHOP DRAWINGS HAVE BEEN REVIEWED BY THE STRUCTURAL ENGINEER.
7. NO FIELD CUTTING OR BURNING OF STRUCTURAL STEEL WILL BE PERMITTED WITHOUT WRITTEN APPROVAL OF THE STRUCTURAL ENGINEER.
8. BASE PLATE SHALL BE LEVELED WITH DOUBLE NUTS, NO LEVELING PLATE ALLOWED.
9. BOLT HOLE IN STEEL SHALL BE 1/16" LARGER THAN NOMINAL BOLT SIZE.
10. CONTRACTOR SHALL BE RESPONSIBLE FOR ANY AND ALL NECESSARY BRACING.
11. ALL SUBSTITUTIONS SUBJECT TO BUILDING DEPARTMENT APPROVAL.
12. THE SEISMIC DESIGN, FABRICATION, AND ERECTION OF STRUCTURAL STEEL SHALL BE IN ACCORDANCE WITH AISC341-05, PUBLISHED BY THE AMERICAN INSTITUTE OF STEEL CONSTRUCTION (AISC). THESE PROVISIONS SHALL BE APPLIED IN CONJUNCTION WITH CHAPTER 22,
13. WELDING SHALL BE PERFORMED IN ACCORDANCE WITH A WELDING PROCEDURE SPECIFICATION (WPS) AS REQUIRED IN AWS D1.1 AND APPROVED BY THE ENGINEER OF RECORD. SPECIFY THE REQUIRED "WELDING PROCEDURE SPECIFICATION" ON PLANS.
14. ALL COMPLETE-JOINT-PENETRATION GROOVE WELDS USED IN THE SEISMIC FORCE RESISTING SYSTEM SHALL BE MADE WITH A FILLER METAL THAT HAS A MINIMUM CVN TOUGHNESS OF 20 FT-LB AT MINUS 20° F.
15. DISCONTINUITIES IN WELD CREATED BY ERRORS OR BY FABRICATION OR ERECTION OPERATIONS, SUCH AS TRACK WELDS, ERECTION AIDS, AIR-ARC GOUGING AND FLAME CUTTING, SHALL BE REPAIRED AS REQUIRED BY THE ENGINEER OF RECORD.
16. FOR CONNECTIONS WITH WELDED FLANGE JOINTS, WELD BACKING AND RUN-OFF TABS SHALL BE REMOVED AND REPAIRED INCLUDING THE USE OF A REINFORCING FILLET WELD, EXCEPT THAT THE TOP-FLANGE BACKING IS PERMITTED TO REMAIN IN PLACE IF IT IS ATTACHED TO THE COLUMN FLANGE WITH A CONTINUOS FILLET WELD ON THE EDGE BELOW THE COMPLETE-JOINT-PENETRATION GROOVE WELD.

STATEMENT OF SPECIAL INSPECTIONS

1. CONTRACTORS RESPONSIBLE FOR THE CONSTRUCTION OF A WIND OR SEISMIC FORCE RESISTING SYSTEM/COMPONENT LISTED IN THE "STATEMENT OF SPECIAL INSPECTIONS" SHALL SUBMIT A WRITTEN STATEMENT OF RESPONSIBILITY TO THE LADBS INSPECTORS AND OWNER PRIOR TO THE COMMENCEMENT OF WORK ON SUCH SYSTEM OR COMPONENT PER SEC. 1706.1
2. CONTINUOUS SPECIAL INSPECTION BY A REGISTERED DUPUTY INSPECTOR IS REQUIRED FOR FIELD WELDING, CONCRETE STRENGTH f'c > 2500 psi, HIGH STRENGTH BOLTING, SPRAYED-ON FIREPROOFING, ENGINEERED MASONRY, HIGH-LIFT GROUTING, PRE-STRESSED CONCRETE, HIGH LOAD DIAPHRAGMS AND SPECIAL MOMENT-RESISTING CONCRETE FRAMES. (1704 & CHAPTERS 19, 21, AND 22)
3. FOUNDATION SILLS SHALL BE NATURALLY DURABLE OR PRESERVATIVE-TREATED WOOD. (2304.11.2.4)
4. FIELD WELDING TO BE DONE BY WELDERS CERTIFIED BY THE LADBS FOR (STRUCTURAL STEEL) (REINFORCING STEEL) (LIGHT GAUGE STEEL). CONTINUOUS INSPECTION BY A DEPUTY INSPECTOR IS REQUIRED.
5. SHOP WELDS MUST BE PERFORMED IN A LADBS LICENCED FABRICATOR'S SHOP.
6. LADBS LICENSED FABRICATOR IS REQURIED FOR (TRUSSES), (STRUCTURAL STEEL),
7. GLUELAM BEAMS MUST BE FABRICATED IN A LADBS LICENCED SHOP. IDENTIFY GRADE SYMBOL AND LAMINATION SPECIES PER T 5-A, 2005 NDS SUPP.
8. PROVIDE LEAD HOLE 40% - 70% OF THREADED SHANK DIA. AND FULL DIA. FOR SMOOTH SHANK PORTION. 2005 NDS
9. PERIODIC SPECIAL INSPECTION IS REQURIED FOR WOOD SHEAR WALLS, SHEAR PANELS, AND DIAPHRAGMS, INCLUDING NAILING, BOLTING, ANCHORING, AND OTHER FASTENING TO COMPONENTS OF THE SEISMIC FORCE RESISTING SYSTEM. SPECIAL INSPECTION BY A DEPUTY INSPECTOR IS REQUIRED WHERE THE FASTENER SPACING OF THE SHEATHING IS MORE THAN 4 INCHES ON CENTER. (1707.3)
10. CONTROLLED ACTIVITY INSPECTION IS REQUIRED FOR (BUILDINGS OVER 5 STORIES) (BUILDINGS OVER 50,000 SF FT OF GROUND FLOOR AREA) (BUILDINGS OVER 200,000SF FT OF FLOOR AREA) 1704.19.

STRUCTURAL METAL DECK NOTES

1. ALL METAL DECK SHALL BE FABRICATED FROM STEEL TYPE ASTW A 466, GRADE A. HAVING A MINIMUM YIELD STRENGTH OF 33,000 PSI. ALL FLOOR DECKING SHALL BE HOT-DIPPED GALVANIZED, OR PHOSPHATIZED AND PAINTED.
2. METAL DECK SECTION PROPERTIES SHALL BE COMPUTED IN ACCORDANCE WITH THE AISI "SPECIFICATION FOR THE DESIGN OF COLD FORMED STEEL STRUCTURAL MEMBERS."
3. THE MINIMUM GAUGE OF ALL METAL DECKS SHALL BE 20 GAUGE.
4. THE METAL DECK CONTRACTOR SHALL SUBMIT, TO THE ARCHITECT FOR REVIEW BY THE ARCHITECT/ENGINEERING OF RECORD, STURUCTURAL ENGINEERING CALCULATIONS, PUBLISHED MANUFACTURER'S DATA, AND CERTIFIED LOAD TEST DATA, VERIFYING THAT THE METAL DECK AND RELATED DECK ACCESSORIES SATISFY THE SPECIFIED LOADING AND DEFLECTION REQUIRMENTS FOR THE SPANS INDICATED ON THE DRAWING
5. THE CONTRACTOR SHALL PROVIDE DETAILED AND CHECKED SHOP DRAWING INDICATING LOCATION, GAUGE AND SIZE OF EACH PIECE OF DECKING AND RELATED DECKING ACCESSORY.
6. ALL DECKING SHALL BE WELDED TO STRUCTURAL STEEL BY QUALIFIED WELDERS USING PRE-QUALIFIED PROCEDURES. THE TECHNICAL SPECIFICATIONS ESTABLISH A PROCEDURE FOR PRE-QUALIFICATIONS OF THE PLUG WELDING OF THE STEEL DECKING TO THE STRUCTURAL STEEL FOR THE PARTICULAR GAUGES USED. PRIOR TO THE START OF ERECTION OF THE STEEL DECK, EACH WELDER SHALL BE QUALIFIED USING THIS PROCEDURE AS WITNESSED BY THE OWNER'S STRUCTURAL STEEL TESTING LABORATORY.
7. ALL METAL DECK SHALL BE WELDED AT 12IN. MAXIMUM ON CENTER TO THE SUPPORTING STEEL WITH A 7/8IN. DIAMETER PLUG WELD. SIDE LAPS SHALL BE FASTNED AT 3IN. MAXIMUM ON CENTER
8. PRPVIDE CONTINUOUS SHEET METAL CLOSURES AT ALL SLAB OPENINGS AND SLAB EDGES AND CONTINUOUS DECK CLOSURES AT ALL DECK ENDS.
9. WHEN THE SPAN OF STEEL COMPOSITE DECK GREATER THAN 7'-0" LONG, CONTRACTOR HAVE TO PROVIDE MID-SPAN SHORING DURING CONSTRUCTION.

MASONRY

1. ALL MASONRY WORK SHALL CONFORM TO THE LATEST EDITION OF THE UNIFORM BUILDING CODE.
2. CONCRETE BLOCK SHALL BE OF SIZES SHOWN ON ARCHITECTURAL DRAWINGS AND/OR CALLED FOR IN SPECS, AND CONFORM TO A.S.T.M. C-90,
   GRADE "N" MEDIUM WEIGHT UNITS WITH MAX. LINEAR SHRINKAGE OF 0.06
3. MORTAR MIX SHALL BE COMPOSED OF ONE PART PORTLAND CEMENT AND THREE PARTS SAND AND NOT LESS THAN 1/4" PART NOR MORE THAN 1/2 PART LINE PUTTY FOR TYPE "S" MORTAR.
4. GROUT MIX SHALL BE COMPOSED OF ONE PART PORTLAND CEMENT TO NOT MORE THAN THREE PARTS SAND AND NOT LESS THAN TWO PARTS PEA GRAVEL, MAX. GROUT LIFT = 5'-0". SPECIAL INSPECTIONS SHALL BE REQUIRED FOR HIGH LIFT GROUTING.
5. ALL MASONRY TO HAVE SPECIAL INSPECTION PER SECTION 1701.5.(7) OF UBC UNLESS NOTED OTHERWISE.
6. CEMENT FOR MORTAR AND GROUT SHALL BE LOW ALKALI TYPE CONFORMING TO ASTM C150.
7. MORTAR AND GROUT SHALL HAVE AN ULTIMATE COMPRESSIVE STRENGTH AT AGE 28 DAYS OF:
   MORTAR 1800 PSI
   GROUT 2000 PSI
8. SOLID GROUTING IS REQUIRED AT ALL THE RETAINING WALLS.
9. CLEANOUTS SHALL BE PROVIDED FOR ALL GROUT POURS OVER 5'.
10. GROUT LIFTS SHALL NOT EXCEED 6'.
11. ALL CELLS AND SPACED CONTAINING REINFORCEMENT SHALL BE FILLED WITH GROUT.
12. FIVE MASONRY PRISM TESTS SHALL BE BUILT AND TESTED PRIOR TO CONSTRUCTION.
13. THREE MASONRY PRISM TESTS(PER 5000 SQ. FT. OF FLOOR AREA, 3 MIN.) SHALL BE BUILT AND TESTED DURING CONSTRUCTION WHEN FULL STRESSES ARE USED IN DESIGN.
14. WHEN DESIGNING FOR HALF STRESS A CERTIFICATION LETTER FROM THE SUPPLIER SHALL CERTIFY THAT THE MATERIALS SUPPLIED ARE REPRESENTATIVE OF TESTS, FIELD TESTS SHALL NOT BE REQUIRED.
15. PIPES AND CONDUITS EMBEDDED IN MASONRY SHALL NOT REDUCED THE REQUIRED STRENGTH.
16. DEPUTY INSPECTION IS REQUIRED FOR MASONRY CONSTRUCTION UNLESS DESIGNED AT HALF STRESS.

WELDING

1. CONTINUOUS INSPECTION BY A REGISTERED DEPUTY INSPECTOR IS REQUIRED ON ALL FIELD WELDING , INSTALLATIONS OF HIGH STRENGTH BOLTS. (A572) , CHORD SPLICE/ TILT- UP PANEL HOLDOWN
2. WELDING JOINTS AT COLUMN SPLICES AND COLUMN TO GIRDER CONNECTIONS IN MOMENT FRAMES SHALL BE CHECKED BY ULTRASONIC TESTINGS OR OTHER APPROVED NON-DESTRUCTIVE TESTINGS BY AN APPROVED TESTING LABORATORY. THE QUANTITIES AND THE LOCATIONS TO RECEIVE THE TESTINGS SHALL BE AS DIRECTED BY THE STRUCTURAL ENGINEER.
3. DEFECTIVE WELDS SHALL BE REPAIRED AND RETESTED AT THE EXPENSE OF THE CONTRACTOR.
4. ALSO REFER TO NOTES #3 AND #4 UNDER STRUCTURAL AND MISC. STEEL.
5. E70T-4 WELD MATERIALS SHALL NOT BE PERMITTED.
6. HIGH STRENGTH BOLTS SHALL CONFORM TO ASTM A325N BEARING TYPE, INSTALLED BY CALIBRATED WRENCH TIGHTENING OF TURN-OF-NUT TIGHTENING.
7. ALL BOLT HOLES SHALL BE BOLT SIZE + 1/16" EXCEPT ANCHOR BOLTS IN BEARING MAY HAVE 3/16" OVERSIZED HOLES. BURNT HOLES SHALL NOT BE PERMITTED.
8. PLEASE SPECIFIY WELDING PROCEDURE SPECIFICATIONS(WPS) WILL BE SUBMITTED TOTHE ENGINEER OF RECOED FOR REVIEW AND APPROVAL PRIOR TO FABRICATION.
9. REGARDING REMOVING THE BACKER BARS, RUNOFF TABS, NOTCH TOUGHNESS OF PARENT METAL, INTERPASS TEMPERATURES.
10. "START WELDING AT THE MOST CENTRAL BEAM AND PROGRESS TOWARDS THE EXTERIOR COLUMNS. ONE END OF EACH BEAM SHALL BE ALLOWED TO COOL BEFORE THE OTHER END IS WELDING, BOLTED WEB CONNECTIONS SHALL BE TENSIONED AT LEAST 24 HOURS AFTER THE WELDING OF FLANGES. SHEAR TABS SHALL BE WELDED (IF REQUIRED) AFTER TAB BOLTS ARE TENSIONED".
11. NOTE ALL WELDING TO BE CONTINUOUSLY INSPECTED BY AWS, QC-1 CERTIFIED WELDING INSPECTOR EMPLOYED BY THE OWNER. TECHNICIANE WHO PERFORM MT & UT TEST SHALL HAVE ASNT CERTIFICATION.
12. PLEASE NOTE ON PLANS ALL WELDING COMPLIES WITH AWS D1.1-96. THE FOLLOWING SECTIONS SHALL BE GIVEN SPECIAL ATTENTION :
    - SENCTION 5.3 FOR QUALIFIED WELDER.
    - SENCTION 4.2 FOR QREHEAT AND INTERPASS TEMPERATURES.
    - SENCTION 4, PARTS B, C AND D FOR ARC WELDING TECHNIQUES.
    - SENCTION 6 AND SECTION 8, PART D FOR INSPECTION.
13. WELDING ELECTRODES, E70XX, COMPLY WITH AWS REQUIREMENT.

CITY LA DBS DEPARTMENT OF BUILDING AND SAFETY

Los Angeles Regional Uniform Code Program

LOS ANGELES REGIONAL LARUCP UNIFORM CODE PROGRAM

STRUCTURAL OBSERVATION REPORT FORM

***STRUCTURAL OBSERVATION** means the visual observation of the structural system, for general conformance to the approved plans and specifications, at significant construction stages and at completion of the structural system. Structural observation does not include or waive the responsibility for the inspections required by Section 108, 1701 or other sections of the code.*

Report No. ________

This report includes all construction work through ______ day of ______________ , 20____ Page No. _____ of _____

Project Address: 909 S. ATLANTIC BLVD. LOS ANGELES, CA		Structural Observer of Record (SOR):	Phone No. of SOR:
Building Permit No.:	Structural Observation performed by: LEE & LEE STRUCTURAL ENG.	Professional Lic./Reg. No. of Observer: S-3821	Phone No. of Observer: 213 351-0034

OBSERVED STRUCTURAL ELEMENTS AND THEIR CONNECTIONS

FOUNDATION	WALL	FRAMES	FLOOR	ELEMENTS/ CONNECTION OBSERVATION LOCATION
☑ Footing, Stem Walls,	☑ Concrete	☑ Steel Moment Frame	☐ Concrete	
☐ Mat Foundation	☑ Masonry	☐ Steel Braced Frame	☑ Steel Deck	
☐ Caisson, Piles, Grade Beams	☐ Wood	☐ Concrete Moment Frame	☐ Wood	
☐ Retaining Foundation Hillside Special Anchors	☐ Others:	☐ Masonry Wall Frame	☐ Others:	
☐ Others:		☑ Others:		

NOTED DEFICIENCIES with the proposed corresponding corrective actions with respect to general conformance with the approved plans or in the load path: (*A final report by the structural observer which states that all observed deficiencies have been resolved is required before acceptance of the work by the building officials.*)

I DECLARE THAT THE FOLLOWING STATEMENTS ARE TRUE TO THE BEST OF MY KNOWLEDGE:

1. **I AM THE ENGINEER OR ARCHITECT RETAINED BY THE OWNER TO BE IN RESPONSIBLE CHARGE FOR THE STRUCTURAL OBSERVATION IN ACCORDANCE WITH THE REQUIREMENTS OF THE CITY OF LOS ANGELES.**
2. **I, OR ANOTHER ENGINEER OR ARCHITECT WHO I HAVE DESIGNATED ABOVE AND IS UNDER MY RESPONSIBLE CHARGE, HAS PERFORMED THE REQUIRED SITE VISITS AT EACH SIGNIFICANT CONSTRUCTION STAGE TO VERIFY IF THE STRUCTURE IS IN GENERAL CONFORMANCE WITH APPROVED PLANS AND SPECIFICATIONS;**
3. **ALL NOTED DEFICIENCIES WHICH REMAIN TO BE CORRECTED HAVE BEEN INDICATED ABOVE;**
4. **I RECOMMEND THAT ACCEPTANCE OF THE STRUCTURAL SYSTEMS BY THE CITY OF LOS ANGELES BE WITHHELD UNTIL ALL OBSERVED DEFICIENCIES ARE CORRECTED.**

SIGNATURE OF STRUCTURAL OBSERVER DATE STAMP OF STRUCTURAL OBSERVER)

IN/Form.08 (Part 1) (Rev. 1/1/2007) www.ladbs.org

ROBERT KUBICEK Architects And Associates, Inc.
18662 MacArthur Blvd. Ste.200
Irvine, California 92612
(949) 798-3838
www.rkaa.com

REGISTERED PROFESSIONAL ENGINEER SANG YOUCK LEE No. 3821 Exp.03-31-10 STRUCTURAL STATE OF CALIFORNIA

date: 01-27-2011

COPYRIGHT 2011 , ALL RIGHTS RESERVED. ROBERT KUBICEK ARCHITECTS AND ASSOC. INC. THIS DRAWING IS AN INSTRUMENT OF SERVICE. IT IS THE PROPERTY OF ROBERT KUBICEK ARCHITECTS AND ASSOC. INC. AND MAY NOT BE REPRODUCED, OR REPRODUCTION HERE OF USED, WITHOUT WRITTEN PERMISSION OF THE ARCHITECT.

1/27/11 CHATTEL ARCHITECTURE SUBMITTAL

NOTICE OF ALTERNATE BILLING OR PAYMENT CYCLE: THIS CONTRACT MAY ALLOW THE OWNER TO REQUIRE THE SUBMISSION OF BILLINGS OR ESTIMATES IN BILLING CYCLES OTHER THAN THIRTY DAYS. THIS CONTRACT MAY ALLOW THE OWNER TO MAKE PAYMENT ON SOME ALTERNATIVE SCHEDULE AFTER CERTIFICATION AND APPROVAL OF BILLING AND ESTIMATES. A WRITTEN DESCRIPTION OF SUCH OTHER BILLING AND/OR CYCLE APPLICABLE TO THE PROJECT IS AVAILABLE FROM THE OWNER AT THE OFFICES OF OWNERCOMPANY OWNERADDRESS OWNERCITYSTATEZIP OWNERNAME OWNERPHONE OR HIS DESIGNATED AGENT SHALL PROVIDE THIS WRITTEN DESCRIPTION ON REQUEST

DEVELOPER:
CHARLES COMPANY
9034 W. SUNSET BLVD.
WEST HOLLYWOOD
CA 90069
TEL (310) 247-0900
FAX (310) 247-1525

CVS pharmacy
STORE #49557
909 S. ATLANTIC BLVD
LOS ANGELES, CA

design RKA
drawn RKA
check RKA

sheet S-1
of
job 09151

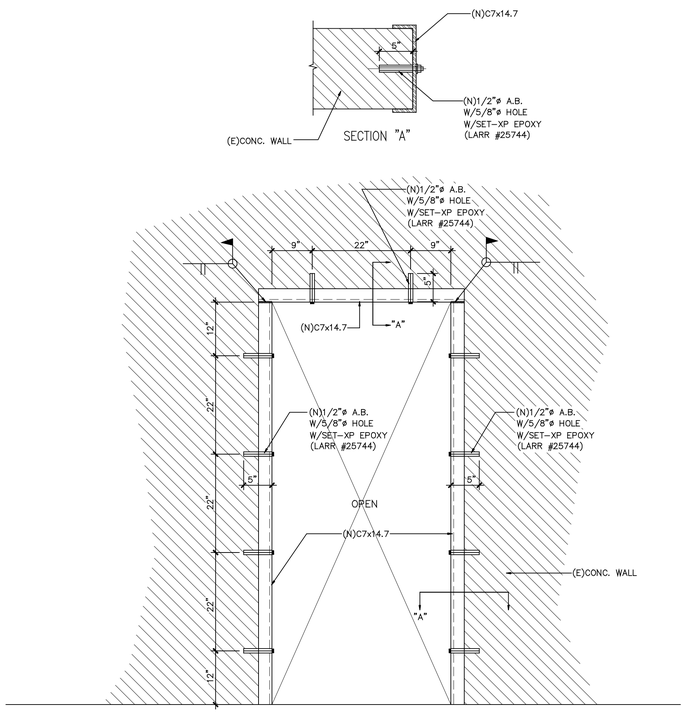

(N)OPENING DETAIL FOR 3'-4"(W)x7'-6"(H) | 10

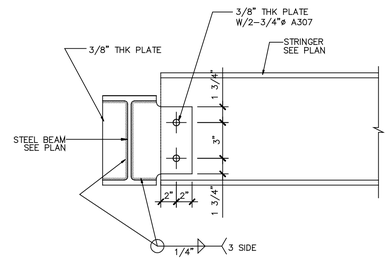

ST'L STRINGER TO ST'L BEAM CONNECTION | 7

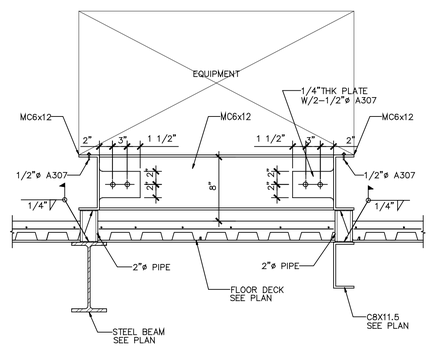

EQUIPMENT PAD DETAIL | 8

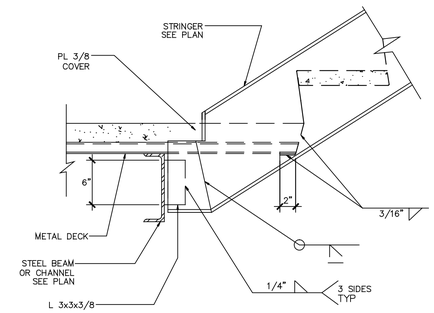

INTERIOR STRINGER

STRINGER SECTION DETAIL | 4

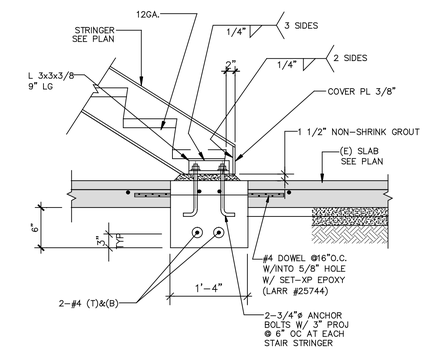

ST'L STRINGER TO FOOTING CONNECTION | 1

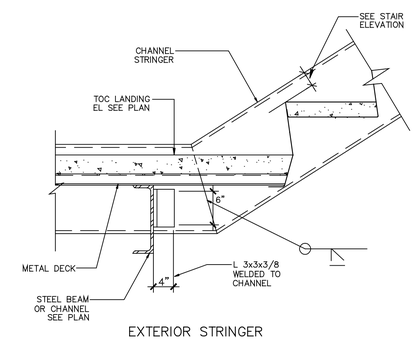

EXTERIOR STRINGER

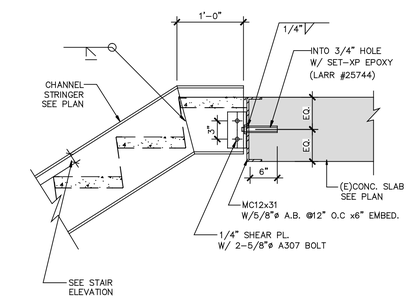

ST'L STRINGER TO CONC. DECK CONNECTION | 2

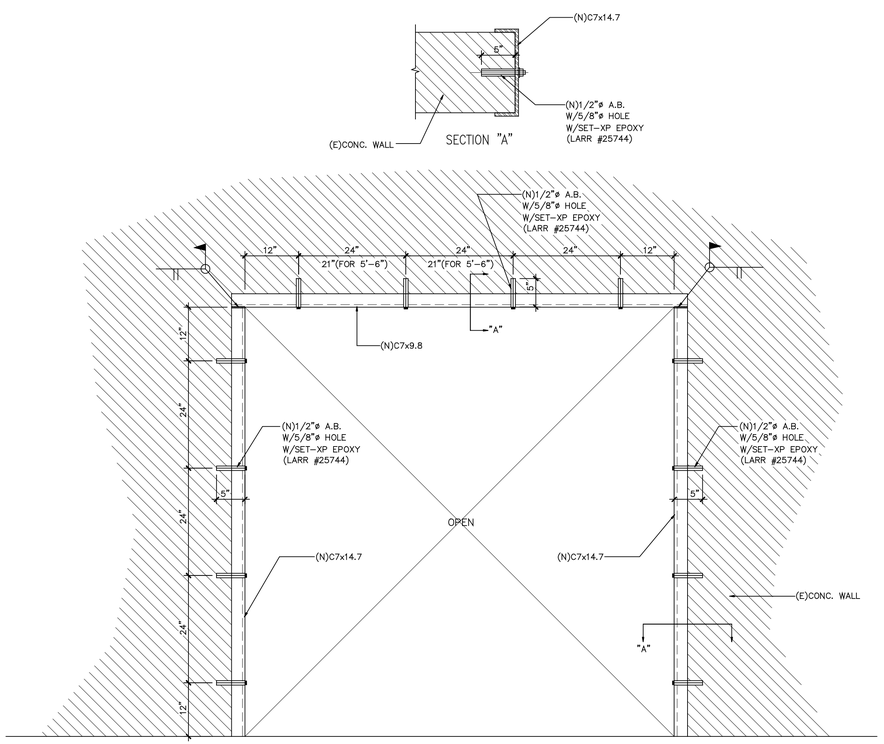

(N)OPENING DETAIL FOR 5'-6"(W)x8'-0"(H) & 8'-0"(W)x8'-0"(H) | 11

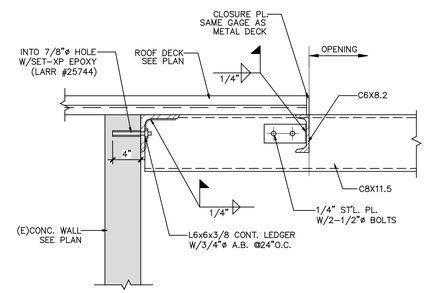

ST'L BEAM TO ST'L CHANNEL CONNECTION | 9

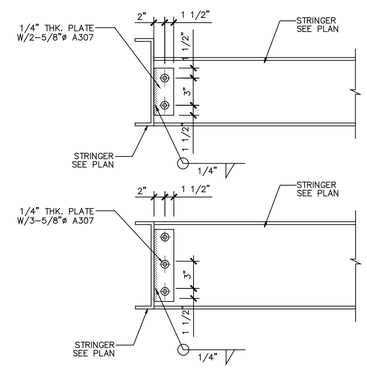

ST'L STRINGER TO ST'L STRINGER CONNECTION | 5

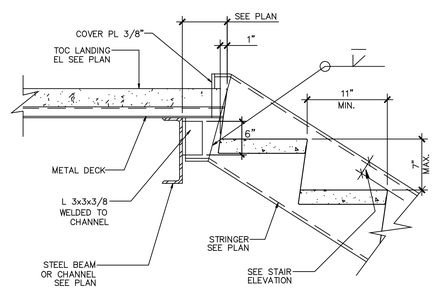

INTERIOR STRINGER

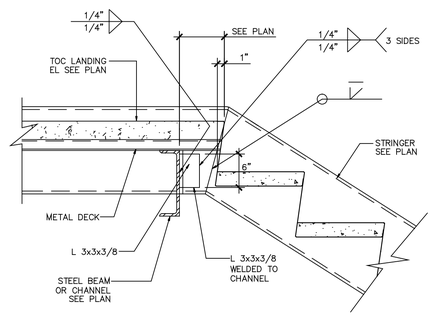

EXTERIOR STRINGER

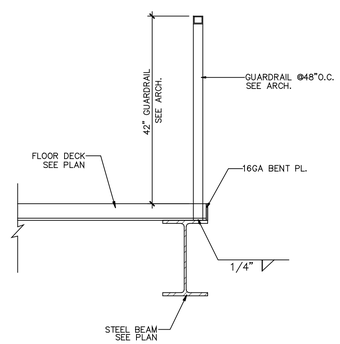

GUARD RAIL DETAIL | 6

STRINGER SECTION DETAIL | 3

ROBERT KUBICEK Architects And Associates, Inc.
19662 MacArthur Blvd.
Ste.200
Irvine, California 92612
(949) 798-3838
www.rkaa.com

REGISTERED PROFESSIONAL ENGINEER
GENE TOUCK LEE
No. 3821
Exp.03-31-10
STRUCTURAL
STATE OF CALIFORNIA

date: 01-27-2011

COPYRIGHT 2001 ALL RIGHTS RESERVED. ROBERT KUBICEK ARCHITECTS AND ASSOCIATES. THIS DRAWING IS AN INSTRUMENT OF SERVICE. IT IS THE PROPERTY OF ROBERT KUBICEK ARCHITECTS AND ASSOCIATES. IT MAY NOT BE USED WITHOUT OR REPRODUCED IN WHOLE OR PARTS WITHOUT WRITTEN PERMISSION OF THE ARCHITECT.

1/27/11	CKMTEL ARCHITECT SUBMITTAL

NOTICE OF ALTERNATE BELIEF OR PATENT CYCLE THIS CONTRACT MAY ALLOW THE OWNER TO REQUIRE THE SUBMISSION OF REVIEW OR USE OF ALTERNATE BELIEF OR PATENT CYCLE DATA. THIS CONTRACT MAY ALLOW THE OWNER TO MAKE PAYMENT ON SOME ALTERNATIVE PURCHASE OR LEASE PROPOSALS BASED ON THE BELIEF OR PATENT CYCLE ESTIMATES. A WRITTEN DESCRIPTION OF BELIEF OR PATENT CYCLE APPLICABLE TO THE SITE IS ON FILE AND AVAILABLE FROM THE OWNER AT THE DEPOT:
CHEMOCAPHARY
CHEMOTHERAPY
CHEMOTHERAPY
CHEMOCAPHARY
CHEMOKUNG
THE CVS DESIGNATED AGENT SHALL PROVIDE THIS WRITTEN DESCRIPTION ON REQUEST.

DEVELOPER:
CHARLES COMPANY
9034 W. SUNSET BLVD.
WEST HOLLYWOOD
CA 90069
TEL (310) 247-0900
FAX (310) 247-1525

CVS pharmacy
STORE #49557
909 S. ATLANTIC BLVD
LOS ANGELES, CA

design RKA
drawn RKA
check RKA

sheet S-10
of
job 09151

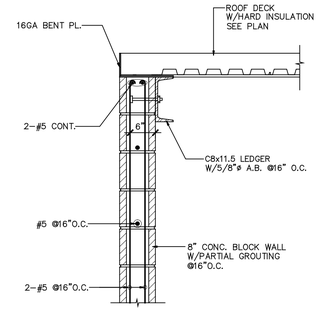

CONC. BLOCK WALL SECTION | 5

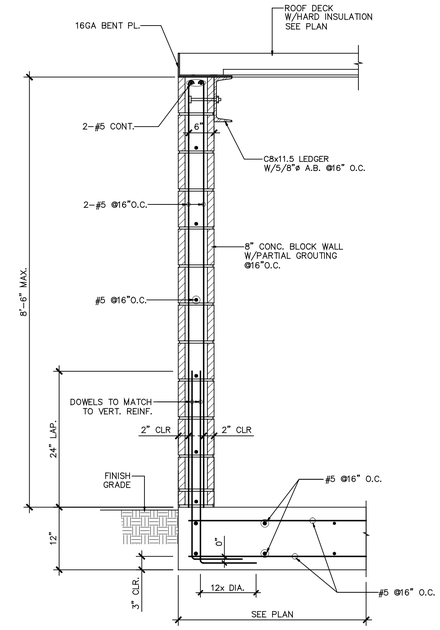

CONC. BLOCK WALL SECTION | 4

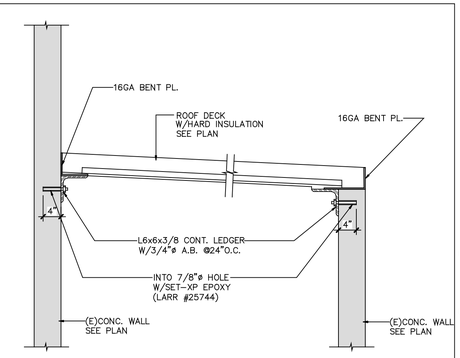

(E)CONC. WALL TO (N)ROOF DECK CONNECTTION | 1

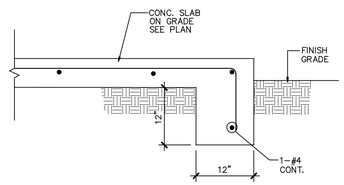

EDGE CONC. SLAB ON GRADE FOOTING | 6

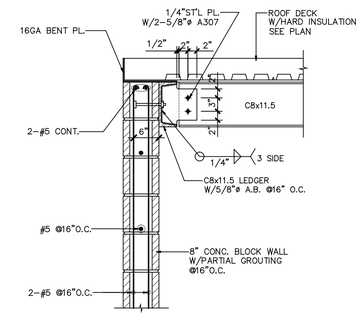

CMU WALL TO ST'L. CHANNEL CONNECTTION | 2

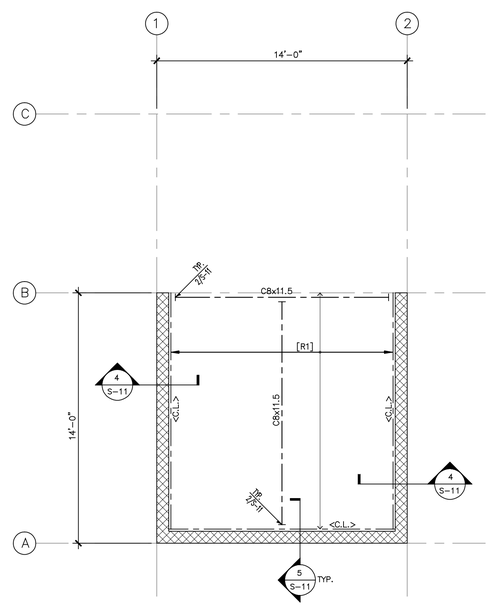

B / –

DUMPSTER ENCLOSURE
ROOF FRAMING PLAN

SCALE : 1/4"=1'-0"

1. ▒ : INDICATES INDICATES 8" CONCRETE MASONRY WALL SEE DETAILS 4/S-11
2. <C.L.> : INDICATES C8x11.5 LEDGER W/5/8"ø A.B. @16" O.C. x6" EMBED.
3. [R1] : INDICATES HSB 36 20GA ROOF DECK W/HARD INSULATION U.N.O. MIN. 2 SPAN CONTINUOUS. SEE DETAILS 1/S-5

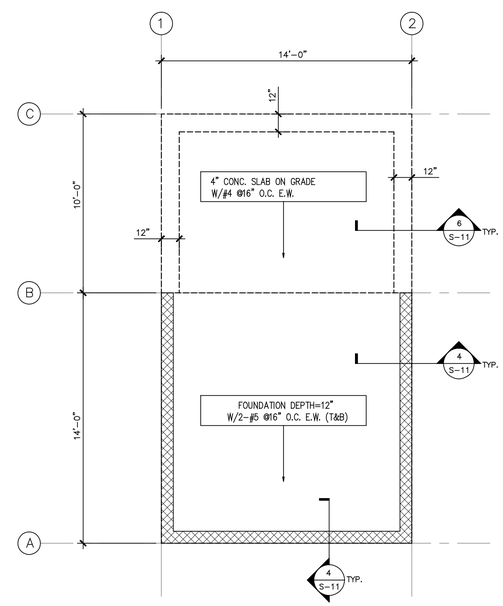

A / –

DUMPSTER ENCLOSURE
FOUNDATION PLAN

SCALE : 1/4"=1'-0"

1. ▒ : INDICATES INDICATES 8" CONCRETE MASONRY WALL SEE DETAILS 4/S-11

DUMPSTER ENCLOSURE PLAN | 3

ROBERT KUBICEK Architects And Associates, Inc.
18662 MacArthur Blvd.
Ste.200
Irvine, California 92612
(949) 798-3538
www.rkaa.com

REGISTERED PROFESSIONAL ENGINEER
GENE TOUCK LEE
No. 3821
Exp.03-31-10
STRUCTURAL
STATE OF CALIFORNIA

date: 01-27-2011

COPYRIGHT 2010 ALL RIGHTS RESERVED. ROBERT KUBICEK ARCHITECTS AND ASSOCIATES. THIS DRAWING IS AN INSTRUMENT OF SERVICE. IT IS THE PROPERTY OF ROBERT KUBICEK ARCHITECTS AND ASSOCIATES. IT MAY NOT BE USED WITHOUT AN REPRODUCTION HERE OF WITH WITHOUT WRITTEN PERMISSION OF THE ARCHITECT.

1/27/11	CKMTTEL ARCHITECTURE SUBMITTAL

NOTICE OF ALTERNATE BILLING OR PAYMENT CYCLE THIS CONTRACT MAY ALLOW THE OWNER TO REQUIRE THE SUBMISSION OF BILLING OR PAYMENT DATA IN A FORMAT OTHER THAN 30DAYS DATA. THIS CONTRACT MAY ALLOW THE OWNER TO MAKE PAYMENT ON SOME ALTERNATIVE SCHEDULE OR BASED ON SOME ALTERNATIVE FORMAT OR DATA AND ESTIMATES. A WRITTEN DESCRIPTION OF SUCH OTHER BILLING AND/OR CYCLE APPLICABLE TO THE OWNER IS AVAILABLE FROM THE OWNER AT THE OFFICES OF:
OWNERCOMPANY
OWNERADDRESS
OWNERCITYSTATEZIP
OWNERPHONE
OWNERNAME
OR THE DESIGNATED AGENT SHALL PROVIDE THIS WRITTEN DESCRIPTION ON REQUEST.

DEVELOPER:
CHARLES COMPANY
9034 W. SUNSET BLVD.
WEST HOLLYWOOD
CA 90069
TEL (310) 247-0900
FAX (310) 247-1525

CVS pharmacy
STORE #40557
909 S. ATLANTIC BLVD
LOS ANGELES, CA

design RKA
drawn RKA
check RKA

sheet S-11
of
job 09151

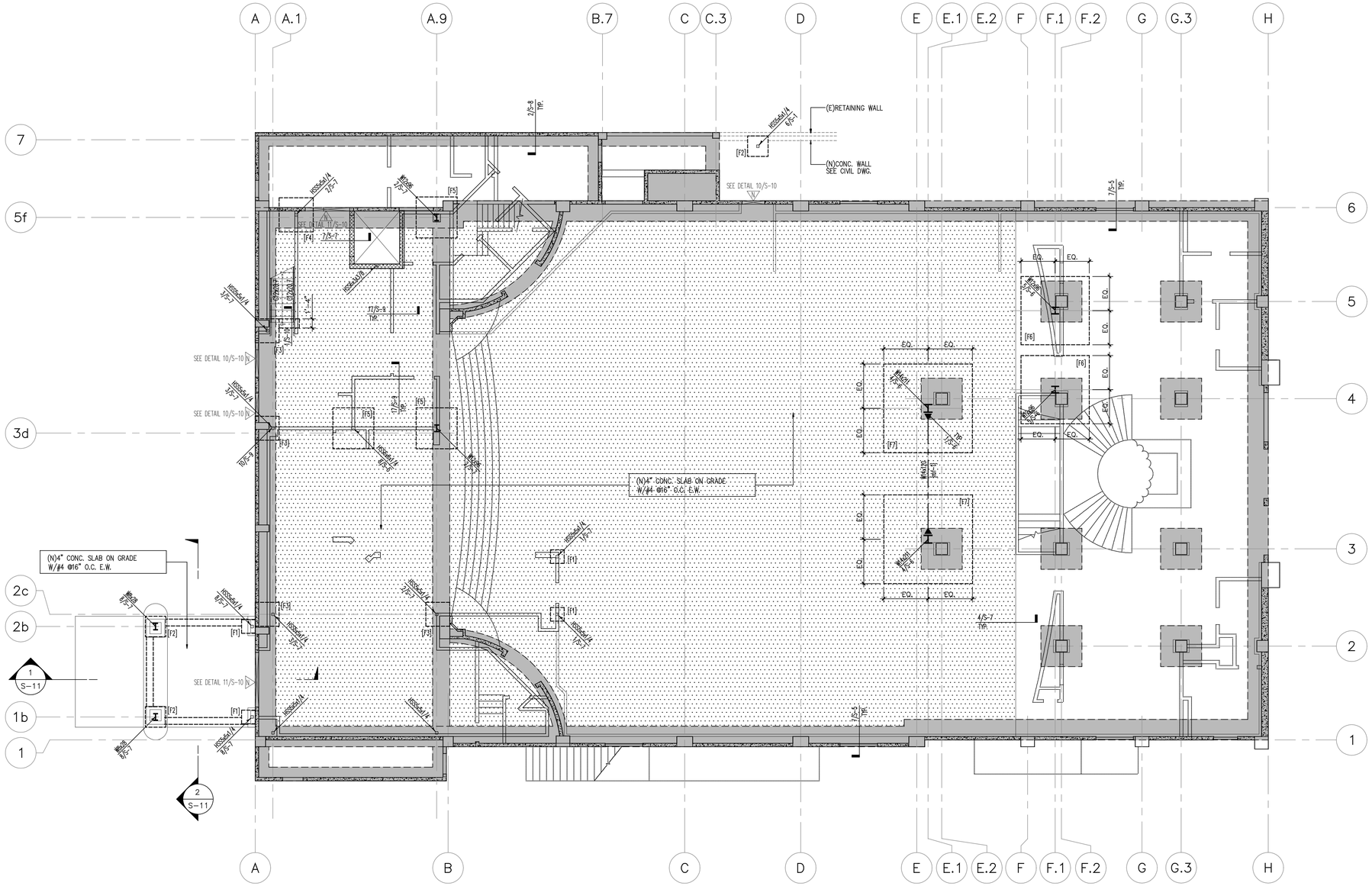

BASE PLATE & A. B. SCHEDULE

COL.	BASE PLATE & A. B.
HSS4x4x1/4	12"X12"X5/8" B.PL. W/4-5/8"ø A.B. X 9" EMBED.
HSS5x5x1/4"	13"X13"X5/8" B.PL. W/4-5/8"ø A.B. X 9" EMBED.
HSS6x6x1/4"	SEE DETAIL 8/S-5
W8x28	16"X16"X5/8" B.PL. W/4-5/8"ø A.B. X 9" EMBED.
W12x96	20"X20"X3/4" B.PL. W/4-3/4"ø A.B. X 9" EMBED.
	SEE DETAIL 5/S-6
W14x211	SEE DETAIL 4/S-6

FOUNDATION SCHEDULE

TYPE	FOUNDATIONS
[F1]	2' – 0" x 2' – 0" x 24" CONCRETE PAD W/#7 @12"O.C. E.W.
[F2]	3' – 0" x 3' – 0" x 24" CONCRETE PAD W/#7 @12"O.C. E.W.
[F3]	3' – 6" x 3' – 6" x 24" CONCRETE PAD W/#7 @12"O.C. E.W.
[F4]	5' – 0" x 5' – 0" x 24" CONCRETE PAD W/#7 @12"O.C. E.W.
[F5]	6' – 0" x 6' – 0" x 24" CONCRETE PAD W/#7 @12"O.C. E.W.
[F6]	10' – 0" x 10' – 0" x 36" CONCRETE PAD W/#8 @12"O.C. E.W.
[F7]	13' – 0" x 13' – 0" x 48" CONCRETE PAD W/#9 @12"O.C. E.W.

1 FOUNDATION PLAN

SCALE : 1/8"=1'-0"

1. SEE SHEET S-1 FOR MATERIAL SPECIFICATION & FOUNDATION NOTES.
2. ALLOWABLE SOILS BEARING PRESSURE IS 1800~2500 psf.
3. ALL CONCRETE STRENGTH IS fc=3000 psi. (28 DAYS) FOR FOUNDATION
4. ALL REINFORCING STEEL STRENGTH fy = 60ksi(GRADE 60)
5. ALL (E) MEMBER SIZE SHALL BE VERIFIED BY G.C. AT FIELD.
6. : INDICATES (E)FOOTING.
7. : INDICATES (E)CONC. WALL.
8. : INDICATES 8" CONCRETE MASONRY WALL W/#5 @16" O.C. E.W. W/SOLID GROUTING W/4-#5 JAM-BAR @BOTH END U.N.O. W/CONTI. INSP.
9. : INDICATES (N)4"CONC. SLAB ON GRADE W/EPS GEOFOAM SEE ARCH.
10. : INDICATES (N)OPENING SEE DETAIL 10/S-10 & 11/S-10.

ROBERT KABIAN Architects And Associates, Inc.
18662 MacArthur Blvd. Ste.200
Irvine, California 92612
(949) 798-3838
www.rkaa.com

REGISTERED PROFESSIONAL ENGINEER
GENE TOUCH LEE
No. 3821
Exp.03-31-10
STRUCTURAL
STATE OF CALIFORNIA

date: 01-27-2011

COPYRIGHT 2011 ALL RIGHTS RESERVED.
THIS DOCUMENT IS AN INSTRUMENT OF SERVICE, IT IS THE PROPERTY OF ROBERT KABIAN ARCHITECTS AND ASSOCIATES, INC. AND MAY NOT BE USED OR REPRODUCED IN WHOLE OR IN PART WITHOUT WRITTEN PERMISSION OF ROBERT KABIAN ARCHITECTS AND ASSOCIATES, INC. THIS DOCUMENT MUST BE RETURNED UPON REQUEST OR UPON COMPLETION OF THE PROJECT.

1/27/11	CM/ITEL ARCHITECTURE SUBMITTAL

NOTICE OF ALTERNATE BELOW IS STATUTORY. CHOLD BE REPRODUCED BY A PERSON OTHER THAN THE ARCHITECT, THE REPRODUCTION SHALL CLEARLY INDICATE THE ALTERATIONS MADE AND SHALL BEAR THE NAME AND PROFESSIONAL SEAL OF THE PERSON MAKING THE ALTERATIONS. THE ARCHITECT ASSUMES NO RESPONSIBILITY FOR ALTERATIONS MADE TO THIS DOCUMENT.
THIS DOCUMENT MAY NOT BE COPIED IN THE FOLLOWING:
1. ELECTRONICALLY
2. PHOTOGRAPHICALLY
3. MECHANICALLY
4. OTHERWISE
THE ARCHITECT HEREIN, AGENT SHALL PROVIDE THIS DOCUMENT ON REQUEST.

DEVELOPER:
CHARLES COMPANY
9034 W. SUNSET BLVD.
WEST HOLLYWOOD
CA 90069
TEL (310) 247-0900
FAX (310) 247-1525

CVS pharmacy
STORE #49557
908 S. ATLANTIC BLVD
LOS ANGELES, CA

design RKA
drawn RKA
check RKA

sheet S-2
of
job 09151

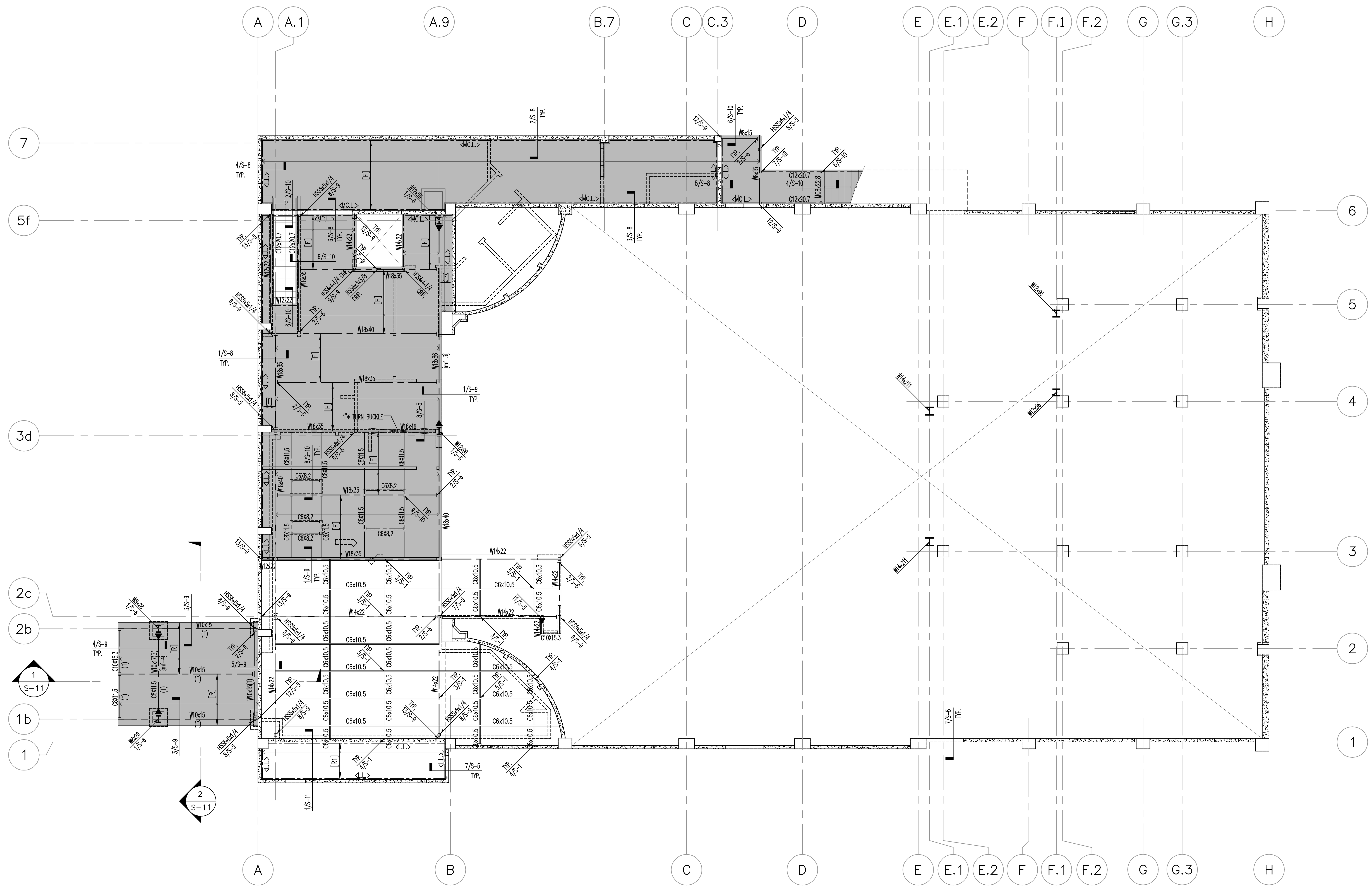

(N)MEZZANINE FLOOR FRAMING PLAN

SCALE : 1/8"=1'-0"

1. SEE SHEET S-1 MATERIAL SPECIFICATIONS AND FRAMING NOTES.
2. ALL REINFORCING STEEL STRENGTH IS Fy=60 ksi (GRADE 60)
3. VERIFY ALL DIMENSIONS SHOWN WITH ARCHITECTURAL DRAWINGS. REPORT ANY DISCREPANCY ON DIMENSIONS TO THE PROJECT ENGINEER OR ARCHITECT IN CHARGE BEFORE THE START OF CONSTRUCTION.
4. ALL LIGHT GAUGE METAL STUDS 350CS20 @16" O.C. FOR INTERIOR WALL W/SAME GAGE OF METAL TRACK 600CS20 @16" O.C. FOR EXTERIOR WALL W/SAME GAGE OF METAL TRACK IF OVER 16'-0" HEIGHT 800CS18 @16" O.C. W/ SAME GAGE OF METAL TRACK (LARR # 24293) UNLESS NOTED OTHERWISE.
5. [R] : INDICATES HSB 36 20GA ROOF DECK W/HARD INSULATION U.N.O. MIN. 2 SPAN CONTINUOUS. SEE DETAILS 1/S-5
6. [F] : INDICATES VERCO FLOOR DECK W3 FORMLOK W/5" NORMAL WEIGHT CONC. W/19GA. MIN. 2 SPAN CONTINUOUS. SEE SHEET 1/S-5
7. ALL STEEL BEAMS SHOULD HAVE 3/4"ø STUD BOLTS @24"O.C.
8. <MC.L.> : INDICATES MC12x20.7 LEDGER W/2-3/4"ø A.B. x4" EMBED. @32" O.C.
9. <L.L.> : INDICATES L6x6x3/8 LEDGER W/3/4"ø A.B. x4" EMBED. @24" O.C.
10. : INDICATES (N)FLOOR & ROOF DIAPHRAGM.
11. : INDICATES (E)CONC. WALL.
12. [R1] : INDICATES HSB 36 20GA ROOF DECK W/HARD INSULATION U.N.O. MIN. 2 SPAN CONTINUOUS. SEE DETAILS 1/S-5

ROBERT KUBICEK Architects And Associates, Inc.
18662 MacArthur Blvd. Ste.200
Irvine, California 92612
(949) 798-3838
www.rkaa.com

REGISTERED PROFESSIONAL ENGINEER SANG YOUCK LEE No. 3821 Exp.03-31-10 STRUCTURAL STATE OF CALIFORNIA

date: 01-27-2011

COPYRIGHT 2011 , ALL RIGHTS RESERVED. ROBERT KUBICEK ARCHITECTS AND ASSOC. INC. THIS DRAWING IS AN INSTRUMENT OF SERVICE. IT IS THE PROPERTY OF ROBERT KUBICEK ARCHITECTS AND ASSOC. INC. AND MAY NOT BE REPRODUCED, OR REPRODUCTION HERE OF USED, WITHOUT WRITTEN PERMISSION OF THE ARCHITECT.

1/27/11	CHATTEL ARCHITECTURE SUBMITTAL

NOTICE OF ALTERNATE BILLING OR PAYMENT CYCLE: THIS CONTRACT MAY ALLOW THE OWNER TO REQUIRE THE SUBMISSION OF BILLINGS OR ESTIMATES IN BILLING CYCLES OTHER THAN THIRTY DAYS. THIS CONTRACT MAY ALLOW THE OWNER TO MAKE PAYMENT ON SOME ALTERNATIVE SCHEDULE AFTER CERTIFICATION AND APPROVAL OF BILLING AND ESTIMATES. A WRITTEN DESCRIPTION OF SUCH OTHER BILLING AND/OR CYCLE APPLICABLE TO THE PROJECT IS AVAILABLE FROM THE OWNER AT THE OFFICES OF: OWNERCOMPANY OWNERADDRESS OWNERCITYSTATEZIP OWNERNAME OWNERPHONE OR HIS DESIGNATED AGENT SHALL PROVIDE THIS WRITTEN DESCRIPTION ON REQUEST

DEVELOPER:
CHARLES COMPANY
9034 W. SUNSET BLVD.
WEST HOLLYWOOD
CA 90069
TEL (310) 247-0900
FAX (310) 247-1525

CVS pharmacy
STORE #49557
909 S. ATLANTIC BLVD
LOS ANGELES, CA

design RKA
drawn RKA
check RKA

sheet S-3
of
job 09151

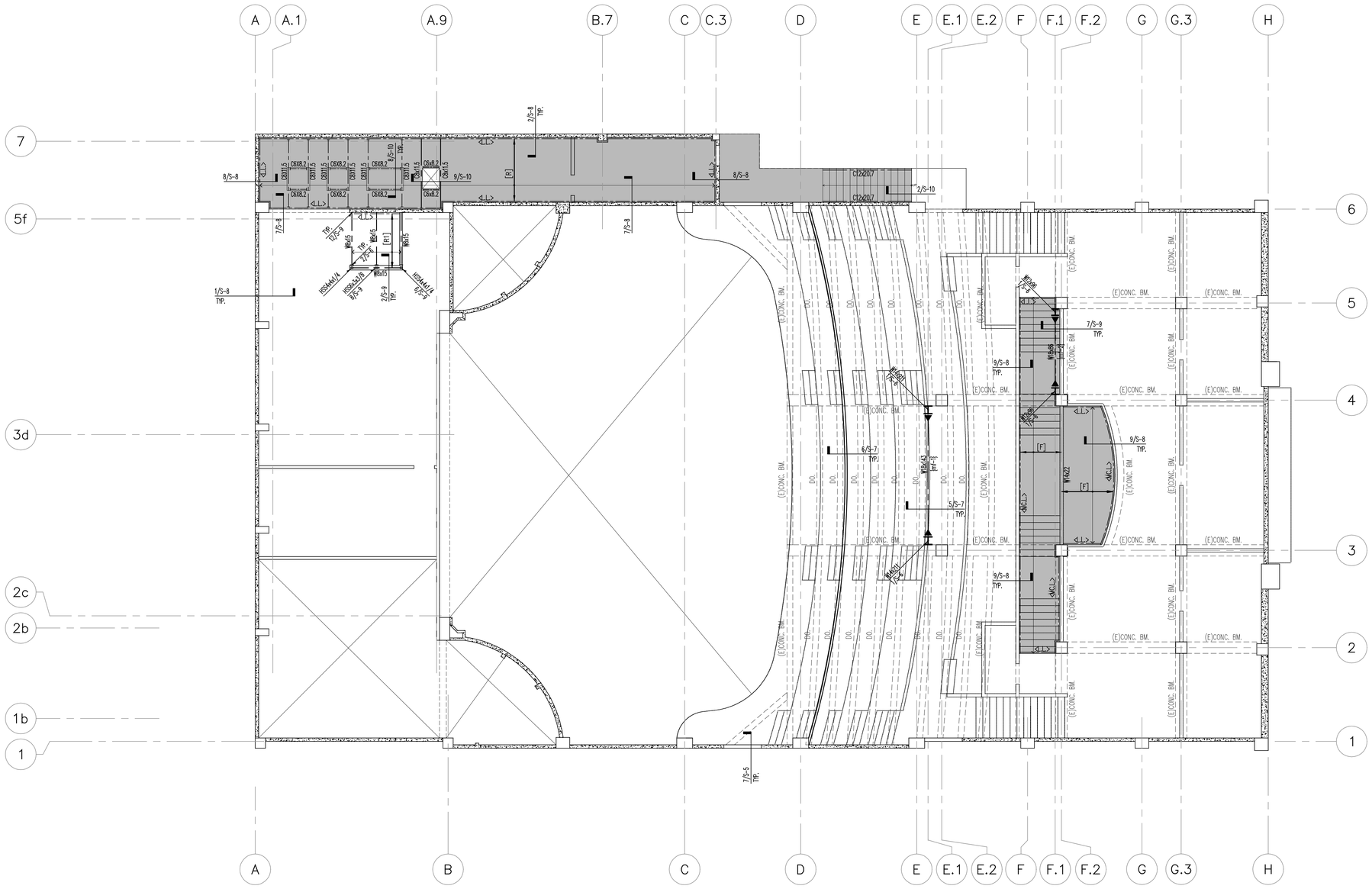

1 (N)ROOF & (E)MEZZANINE FLOOR FRAMING PLAN

SCALE : 1/8"=1'-0"

1. SEE SHEET S-1 MATERIAL SPECIFICATIONS AND FRAMING NOTES.
2. ALL REINFORCING STEEL STRENGTH IS Fy=60 ksi (GRADE 60)
3. VERIFY ALL DIMENSIONS SHOWN WITH ARCHITECTURAL DRAWINGS. REPORT ANY DISCREPANCY ON DIMENSIONS TO THE PROJECT ENGINEER OR ARCHITECT IN CHARGE BEFORE THE START OF CONSTRUCTION.
4. ALL LIGHT GAUGE METAL STUDS 350CS20 @16" O.C. FOR INTERIOR WALL W/SAME GAGE OF METAL TRACK
   600CS20 @16" O.C. FOR EXTERIOR WALL W/SAME GAGE OF METAL TRACK
   IF OVER 16'-0" HEIGHT 800CS18 @16" O.C. W/ SAME GAGE OF METAL TRACK
   (LARR # 24293) UNLESS NOTED OTHERWISE.
5. [R] : INDICATES N24 22GA ROOF DECK W/HARD INSULATION U.N.O. MIN. 2 SPAN CONTINUOUS. SEE DETAILS 1/S-5
6. [R1] : INDICATES HSB 36 20GA ROOF DECK W/HARD INSULATION U.N.O. MIN. 2 SPAN CONTINUOUS. SEE DETAILS 1/S-5
7. [F] : INDICATES VERCO FLOOR DECK W3 FORMLOK W/5" NORMAL WEIGHT CONC. W/19GA. MIN. 2 SPAN CONTINUOUS. SEE SHEET 1/S-5
8. ALL STEEL BEAMS SHOULD HAVE 3/4"ø STUD BOLTS @24"O.C.
9. <MC.L.> : INDICATES MC12x20.7 LEDGER W/2-3/4"ø A.B. x4" EMBED. @32" O.C.
10. <L.L.> : INDICATES L6x6x3/8 LEDGER W/3/4"ø A.B. x6" EMBED. @24" O.C.
11. : INDICATES (N)FLOOR & ROOF DIAPHRAGM.
12. : INDICATES (E)CONC. WALL.

ROBERT KABIAN Architects And Associates, Inc.
18662 MacArthur Blvd. Ste.200
Irvine, California 92612
(949) 798-3838
www.rkaa.com

REGISTERED PROFESSIONAL ENGINEER
GENE YOUCK LEE
No. 3821
Exp.03-31-10
STRUCTURAL
STATE OF CALIFORNIA

date: 01-27-2011

COPYRIGHT 2011 ALL RIGHTS RESERVED. THIS DOCUMENT IS THE PROPERTY OF ROBERT KABIAN & ASSOCIATES, INC. THIS DOCUMENT IS AN INSTRUMENT OF SERVICE, IT IS NOT TO BE REPRODUCED, PUBLISHED OR USED FOR ANY PURPOSE OR PROJECT WITHOUT WRITTEN PERMISSION OF ROBERT KABIAN & ASSOCIATES, INC. THE PROPERTY OF ROBERT KABIAN & ASSOCIATES, INC. MAY BE REMOVED ONLY BY AGREEMENT WITH THE PROPRIETOR OF THE ARCHITECT.

1/27/11	CKA/TEL ARCHITECTURE SUBMITTAL

NOTE: IF ANY ALTERATION TO PLAN IS REQUIRED, WHICH AFFECTS THE STRUCTURAL DESIGN, THE STRUCTURAL ENGINEER MUST BE CONTACTED. IF THE STRUCTURAL ENGINEER IS NOT CONTACTED, THE STRUCTURAL DRAW BOTH THE ARCHITECT AND THE STRUCTURAL ENGINEER. A WRITTEN DESCRIPTION OF WORK TO BE PERFORMED MUST BE PROVIDED TO THE STRUCTURAL ENGINEER FOR REVIEW AND APPROVAL PRIOR TO REPAIR AT THE JOBSITE.
CONTRACTOR
ARCHITECT
STRUCTURAL ENGINEER
MECHANICAL
ELECTRICAL
PLUMBING
FIRE SPRINKLER
THE CONTRACTOR, ARCHITECT AND ENGINEER SHALL PROVIDE THE NECESSARY PLANS TO THE JURISDICTION.

DEVELOPER:
CHARLES COMPANY
9034 W. SUNSET BLVD.
WEST HOLLYWOOD
CA 90069
TEL (310) 247-0900
FAX (310) 247-1525

CVS pharmacy
STORE #49557
909 S. ATLANTIC BLVD
LOS ANGELES, CA

design RKA
drawn RKA
check RKA

sheet S-4
of
job 09151

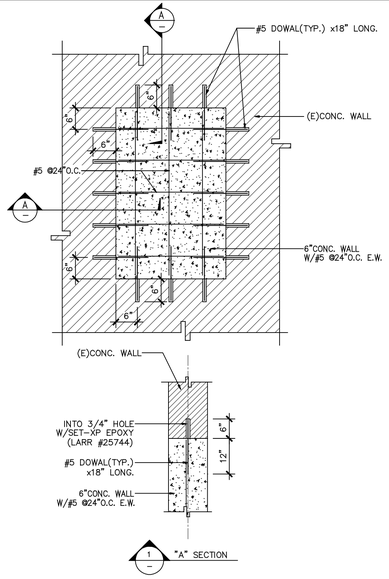

(N)CMU WALL FILL DETAIL | 7

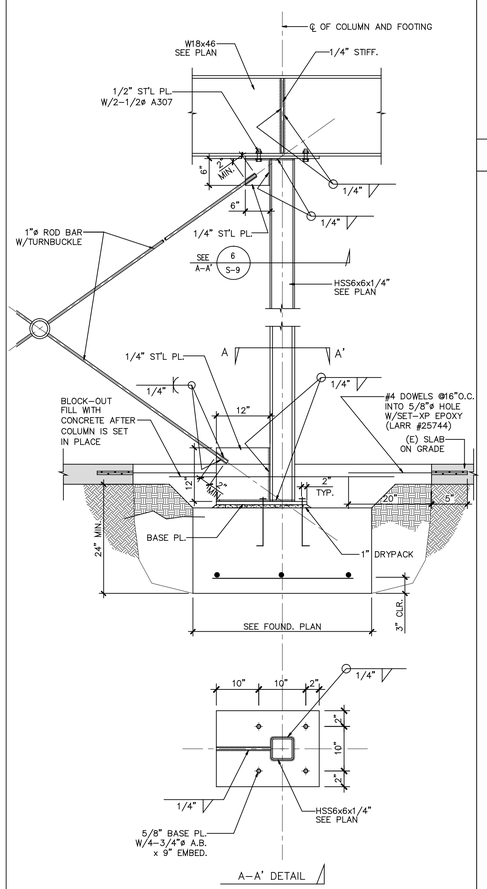

ST'L. BRACE DETAIL | 8

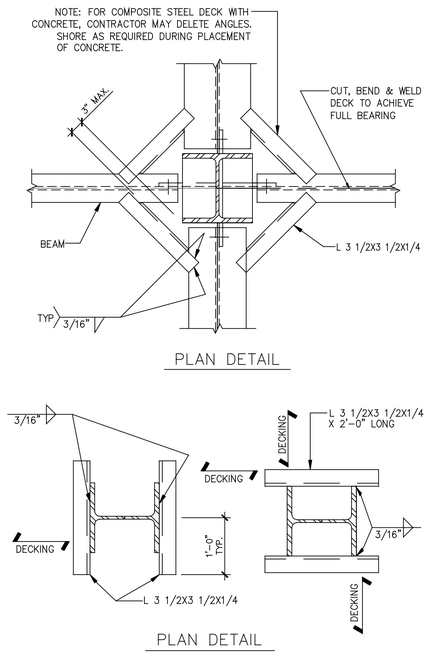

NOTE:

PROVIDE ANGLES AS REQUIRED WHERE BEAMS DO NOT FRAME TO COLUMNS CONTRACTOR TO PROVIDE 16 GA SHEET METAL TO FILL COLUMN CAVITY AS REQ'D WHERE BEAMS OCCUR ON TWO SIDES OR MORE OF COLUMNS, SEE DETAIL 6/S-2

TYPICAL PLAN DETAIL FOR SUPPORT OF METAL DECK AT COLUMNS | 5

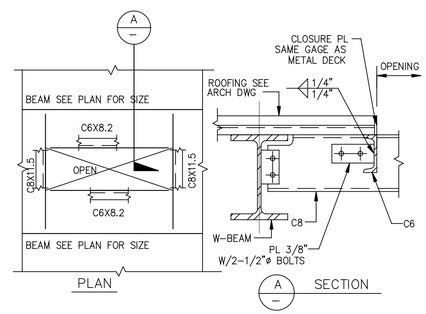

OPENING GREATER THAN 12"X12"

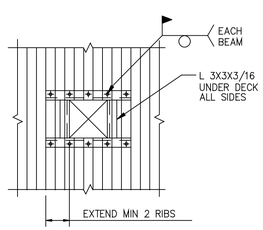

MAXIMUM 12"X12" OPENING

NOTE:

1. FOR LOCATIONS AND SIZE OF OPENINGS SEE ARCHITECTURAL AND MECHANICAL DRAWINGS.

TYPICAL FLOOR AND ROOF OPENING DETAIL | 6

METAL DECK WELDING SCHEDULE

DETAIL TYPE	END WELD	EDGE WELD	MARGINAL WELD	INTERMEDIATE WELD	SEAMS WELD	REMARKS
HSB-36	4-3/4"ø PUDDLE WELD	3/4" PUDDLE WELD @ 12" OC	3/4" PUDDLE WELD @ 12" OC	4-3/4" PUDDLE WELD	@ 12" OC	
N24	4-3/4"ø PUDDLE WELD	3/4" PUDDLE WELD @ 12" OC	3/4" PUDDLE WELD @ 12" OC	4-3/4" PUDDLE WELD	@ 12" OC	
W3 FORMLOK	4-3/4"ø PUDDLE WELD	3/4" PUDDLE WELD @ 12" OC	3/4" PUDDLE WELD @ 12" OC	4-3/4" PUDDLE WELD	@ 12" OC	

* WHERE NELSON STUDS OCCUR, NO PUDDLE WELDING

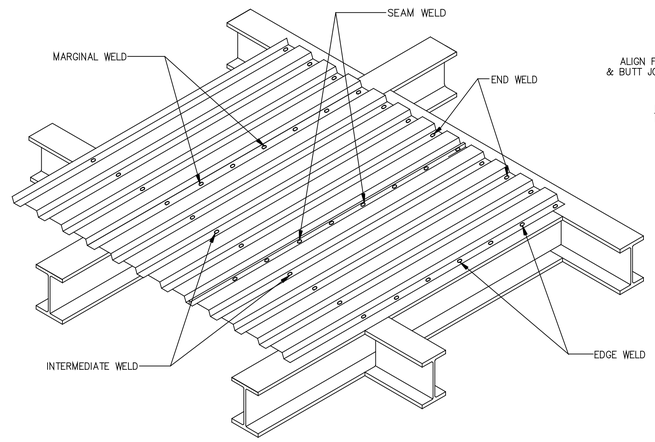

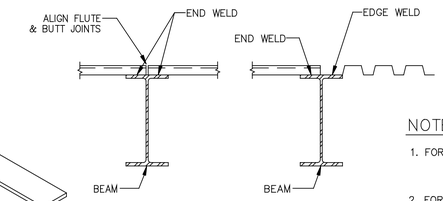

TYPICAL DECK SPLICE

NOTE:

1. FOR SEAM WELD SEE 1/— AND SCHEDULE
2. FOR PUDDLE WELD SEE 1/— AND SCHEDULE

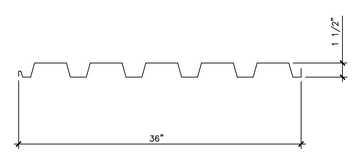

HSB-36 20GA. SEE PLAN
N24 22GA. SEE PLAN

TYPICAL ROOF DECK PROFILE

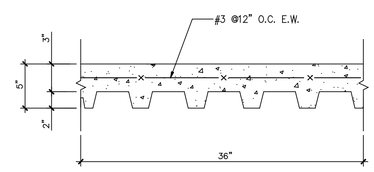

GAGE 19 SEE PLAN
TYP. W3 FORMLOK

TYPICAL FLOOR DECK PROFILE

METAL DECKING NOTES

1. SEE SHEET S-1.1 FOR STEEL METAL DECK SPECIFICATIONS.
2. DECK DIRECTION CONTRACTOR SHALL CUT DECK TO SUIT DETAILS AT ALL FRAMED OPENINGS, COLUMNS, AND COLUMN CONNECTIONS AS INDICATED ON DRAWINGS. CLOSER AT DECK END SHALL CLOSE OFF OPEN FLUTES ONLY. (I.E. NOT CONTINUOUS)
3. THE OPENING SHOWN ON THE FRAMING PLANS INDICATE THE GENERAL ARRANGEMENT AND LOCATION ONLY. VERIFY CUTTING LENGTH OF DECK WITH ARCHITECTURAL, ELECTRICAL AND MECHANICAL DRAWINGS.
4. ALL WELDER SHALL BE CERIFIED FOR LIGHT GAUGE STEEL WELDING BY THE BUILDING DEPT.
5. CONTINUOUS INSPECTION BY A DEPUTY INSPECTOR IS REQIRED FOR WELDING OF DECK.
6. ALL LIGHT GAUGE STEEL DECKING AND FLASHING SHALL BE FABRICATED OF SHEET METAL CONFORMING TO ASTM A-446. DECKING SHALL BE OF COMPOSITE DESIGN WHERE CONCRETE FILL IS PLACED OVER DECK. DECK AT ELASTOMETIC COATED AREAS SHALL BE VENTED.
7. WHERE DECKING IS OVER MAXIMUM ALLOWABLE SPAN OR WHERE CONCRETE FILL IS OVER 4" THICK FOR NORMAL WEIGHT, AND 6" FOR LIGHTWEIGHT SHORE DECK AT THIRD POINT ONE END TO LOWER FLANGE OF STEEL BEAM.
8. DECK TO BEAR ON SUPPORTS 2" MIN.
9. LARR # 23789

TYPICAL METAL DECK DETAIL | 1

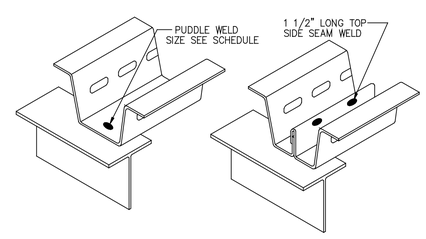

PUDDLE WELD SIDE SEAM WELD

TYP. WELD DETAIL | 4

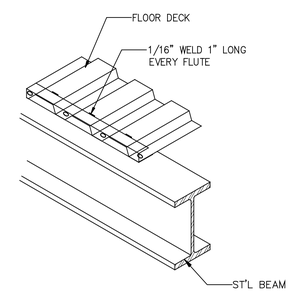

TYPICAL SHEAR TRANS DETAIL | 3

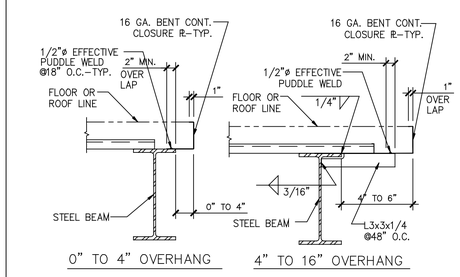

0" TO 4" OVERHANG 4" TO 16" OVERHANG

NOTE:

1. PROVIDE 20 GA. CLOSURE AT END OF DECK-TYP.
2. DECK PERPENDICULAR TO BEAM SHOWN. DECK PARALLEL TO BEAM CONDITION SIMILAR.

EDGE OF DECK DETAIL | 2

ROBERT KABIAK Architects And Associates, Inc.
18662 MacArthur Blvd. Ste.200
Irvine, California 92612
(949) 798-3838
www.rkaa.com

REGISTERED PROFESSIONAL ENGINEER GENE TOUCK LEE No. 3821 Exp.03-31-10 STRUCTURAL STATE OF CALIFORNIA

date: 01-27-2011

COPYRIGHT 2010 ALL RIGHTS RESERVED. THIS DOCUMENT IS THE PROPERTY OF ROBERT KABIAK AND ASSOCIATES, INC. THIS DRAWING IS AN INSTRUMENT OF SERVICE, IT IS THE PROPERTY OF ROBERT KABIAK ARCHITECTS. ALL REPRODUCTIONS OF THIS DRAWING MUST BEAR AN REPRODUCTION NOTE OF THIS, WITHOUT WRITTEN PERMISSION OF THE ARCHITECT.

1/27/11	CK/ITEL ARCHITECTURE SUBMITTAL

NOTICE OF ALTERNATE BILLING OR PAYMENT: CHECK THIS CONTRACT MAY ALLOW THE OWNER TO ALTERNATE BILLING OR PAYMENT FOR ITEMS ESTIMATED IN BILLING CYCLES OTHER THAN "SET" DATE. THE CONTRACT MAY ALLOW THE OWNER TO WITHHOLD 10% OF THE ESTIMATED VALUE OF ITEMS UPON VERIFICATION AND APPROVAL OF PLANS AND ESTIMATES. A WRITTEN DESCRIPTION OF SUCH ITEMS AND THE ESTIMATED VALUE OF EACH ITEM SHALL BE PROVIDED IF AVAILABLE PRIOR TO ORDER AT THE OFFICES OF:
CHARLES COMPANY
ORIGINADORES
OMNOTITUTSICIN
OMNOTITUTSICIN
OMNIPOTENCIA
THE ARCHITECTS AND/OR SHALL PROVIDE THIS WRITTEN DESCRIPTION ON REQUEST.

DEVELOPER:
CHARLES COMPANY
9034 W. SUNSET BLVD.
WEST HOLLYWOOD
CA 90069
TEL (310) 247-0900
FAX (310) 247-1525

CVS pharmacy
STORE #40557
909 S. ATLANTIC BLVD
LOS ANGELES, CA

design RKA
drawn RKA
check RKA

sheet S-5
of
job 09151

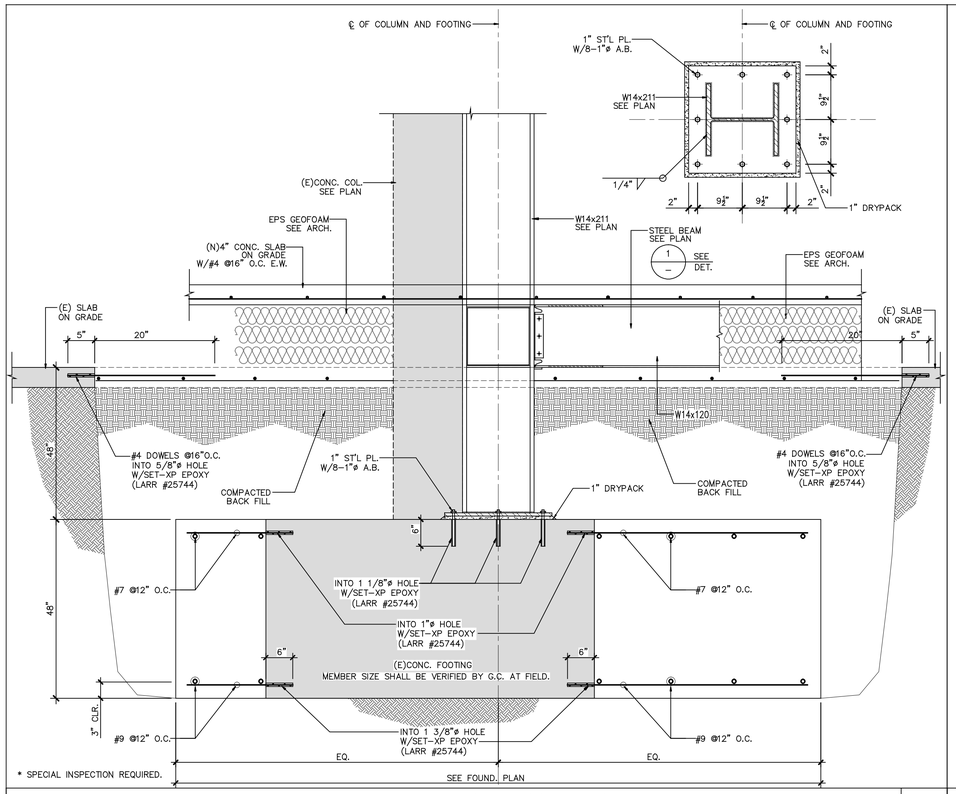

* SPECIAL INSPECTION REQUIRED.

STEEL COL. & FOOTING CONNECTTION | 4

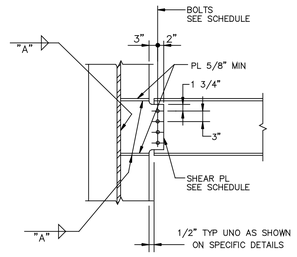

BEAM TO COLUMN WEB

BOLT SCHEDULE

BEAM DEPTH	SHEAR PL (THK)	WELD SIZE ("A")	3/4"ø A307 NUMBER OF BOLTS TYP UNO	7/8"ø A307 NUMBER OF BOLTS TYP UNO	1"ø 307 NUMBER OF BOLTS TYP UNO	REMARKS
W8	3/8"	1/4"	2	N.A.	N.A.	
W10	3/8"	1/4"	2	N.A.	N.A.	
W12	3/8"	1/4"	3	N.A.	N.A.	
W14	3/8"	1/4"	N.A.	3	N.A.	
W16	1/2"	5/16"	N.A.	4	N.A.	
W18	1/2"	5/16"	N.A.	5	N.A.	
W21	3/4"	5/16"	N.A.	N.A.	6	
W24	1"	5/16"	N.A.	N.A.	7	

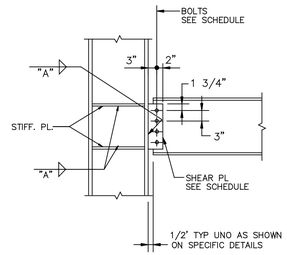

BEAM TO COLUMN FLANGE

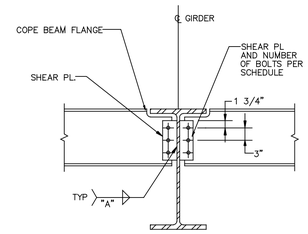

BEAM TO BEAM CONN

TYPICAL BEAM CONNECTION DETAILS | 2

RBS CONNECTION

STEEL PLATE SCHEDULE

COL.	GIRDER	DOUBLER	CONTINUITY
W14x211	W18x143	7/8"	1"
W14x211	W14x120	7/8"	1"
W12x96	W18x86	7/8"	3/4"
W8x28	W10x17	1/2"	3/4"

GEOMETRY OF RADIUS CUT (RBS)

	a	b	c	r
W18x143	6.0"	14.0"	1.0"	1.5"
W14x120	6.0"	14.0"	1.0"	1.5"
W18x86	6.0"	12.0"	1.0"	1.5"
W10x17	4.0"	6.0"	1.0"	5.0"

ERECTION BOLT SCHEDULE

BEAM DEPTH	HORIZONTAL & WEB PLATE THK.	FILLET WELD SIZE ("A")	3/4"ø A307 NUMBER OF BOLTS TYP.
W8	5/8"	PL THK/2	2
W12	5/8"	PL THK/2	3
W14	5/8"	PL THK/2	3

WELDING SCHEDULE

PLATE THK.	WELDING SIZE
≤ 1/4"	1/8"
≤ 1/2"	1/4"
≤ 3/4"	1/4"
≤ 1.0"	5/16"
> 1.0"	1/2"

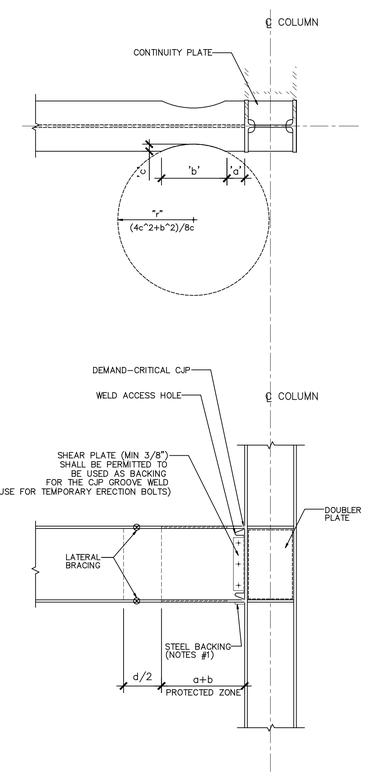

NOTES #1 : WHEN USED, BACKING MUST BE REMOVED AND THE ROOT PASS MUST BE BACKGOUGED AND BACK-WELDED WITH A REINFORCING FILLET.

NOTES #2 : SEE STANDARD QUALITY ASSURANCE PLAN(QA1~3)

RBS CONNECTION | 1

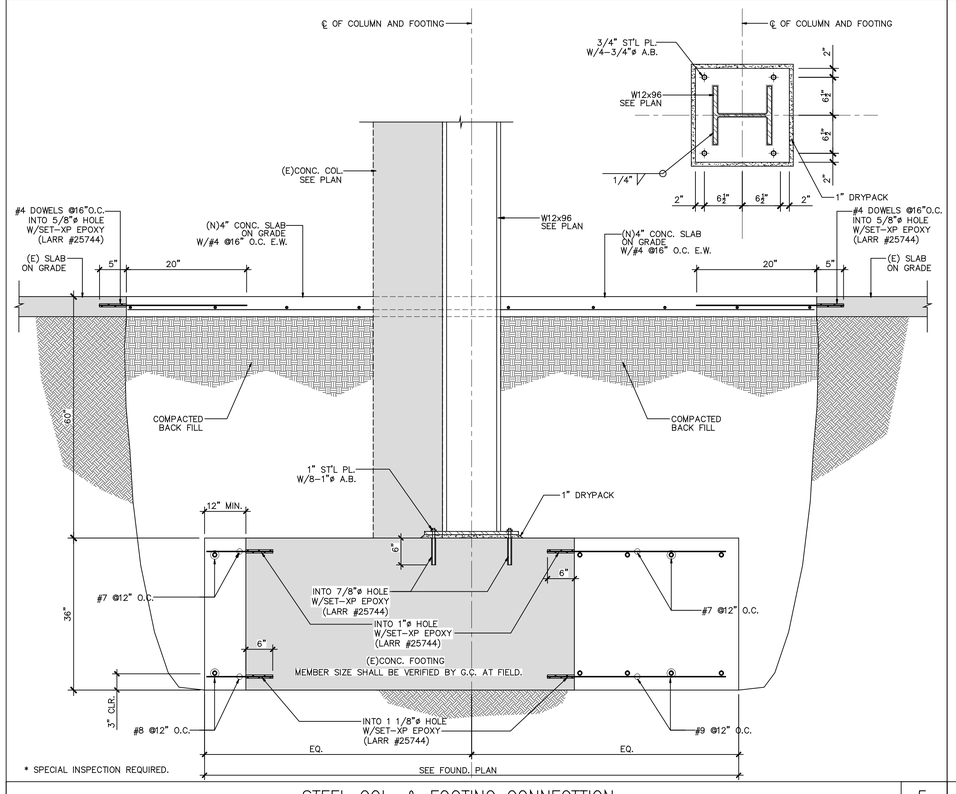

* SPECIAL INSPECTION REQUIRED.

STEEL COL. & FOOTING CONNECTTION | 5

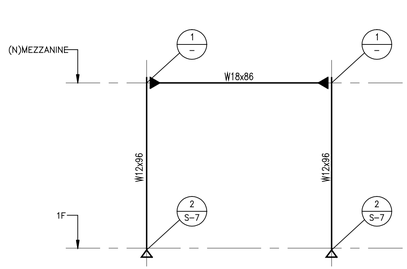

{mf-3} STEEL FRAM'G ELEVATION

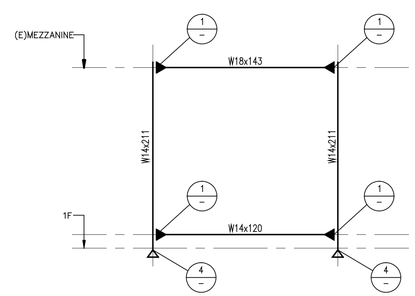

{mf-1} STEEL FRAM'G ELEVATION

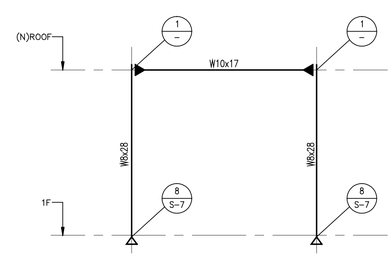

{mf-4} STEEL FRAM'G ELEVATION

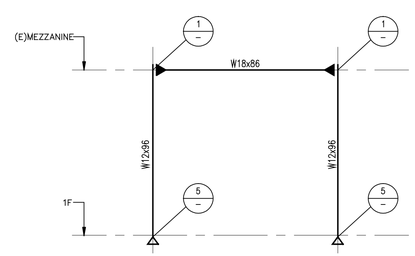

{mf-2} STEEL FRAM'G ELEVATION

STEEL FRAM'G ELEVATION | 3

ROBERT KUBIAK Architects And Associates, Inc.
19662 MacArthur Blvd. Ste.200
Irvine, California 92612
(949) 798-3838
www.rkaa.com

REGISTERED PROFESSIONAL ENGINEER
GENE TOUCK LEE
No. 3821
Exp.03-31-10
STRUCTURAL
STATE OF CALIFORNIA

date: 01-27-2011

COPYRIGHT 2001 ALL RIGHTS RESERVED. ROBERT KUBIAK ARCHITECTS AND ASSOCIATES. THIS DRAWING IS AN INSTRUMENT OF SERVICE, IT IS THE PROPERTY OF ROBERT KUBIAK ARCHITECTS. ANY REPRODUCTION IN PART OR WHOLE, OR REPRODUCTION HOW OF USED, WITHOUT WRITTEN PERMISSION OF THE ARCHITECT.

1/27/11 CKATTEL ARCHITECTURE SUBMITTAL

NOTICE OF ALTERNATE BELOW OR PATENT CYCLE THIS CONTRACT MAY ALLOW THE OWNER TO REQUIRE THE SUBMISSION OF REVISED OR ALTERNATE DESIGN DRAWINGS AND/OR DESIGN DATA. THIS CONTRACT MAY ALLOW THE OWNER TO MAKE PAYMENT ON SOME ALTERNATIVE SCHEDULE AND/OR CYCLE APPLICABLE TO THE REVISED AND ALTERNATE. A WRITTEN DESCRIPTION OF SUCH OTHER BILLING AND/OR CYCLE APPLICABLE TO THE REVISED AND ALTERNATE MAY BE OBTAINED AT THE OFFICES OF
OWNER/COMPANY
ARCHITECTURE
CONSULTING ENGINEER
CONTRACTOR
OWNER/CONTRACTOR
THE OWNER DESIGNATED AGENT SHALL PROVIDE THIS WRITTEN DESCRIPTION ON REQUEST.

DEVELOPER:
CHARLES COMPANY
9034 W. SUNSET BLVD.
WEST HOLLYWOOD
CA 90069
TEL (310) 247-0900
FAX (310) 247-1525

CVS pharmacy
STORE #40557
909 S. ATLANTIC BLVD
LOS ANGELES, CA

design RKA
drawn RKA
check RKA

sheet S-6
of
job 09151

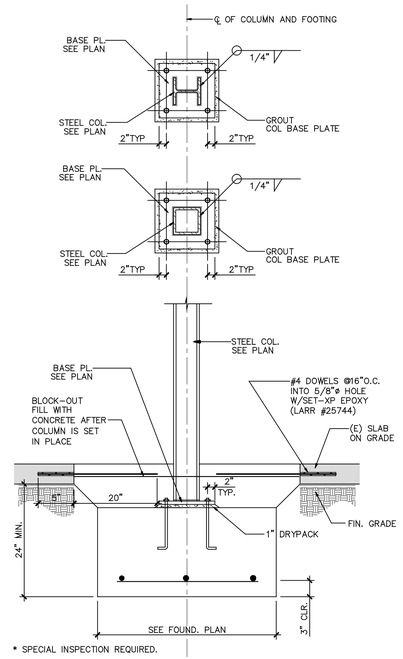

* SPECIAL INSPECTION REQUIRED.

STEEL COL. & FOOTING CONNECTTION | 8

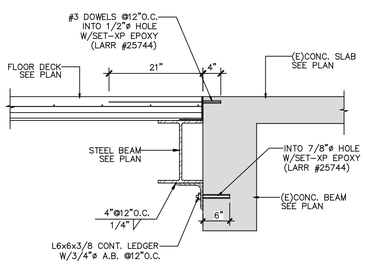

(E)CONC. BEAM TO (N)ST'L BEAM CONNECTTION | 9

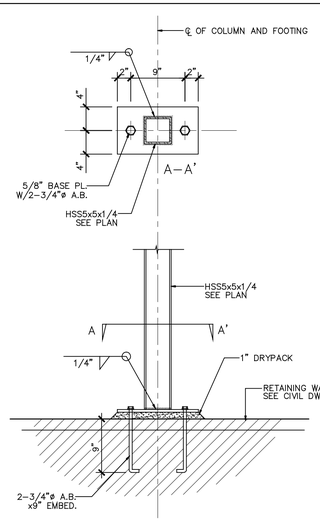

ST'L. COL. TO (E)CONC. WALL CONNECTTION | 10

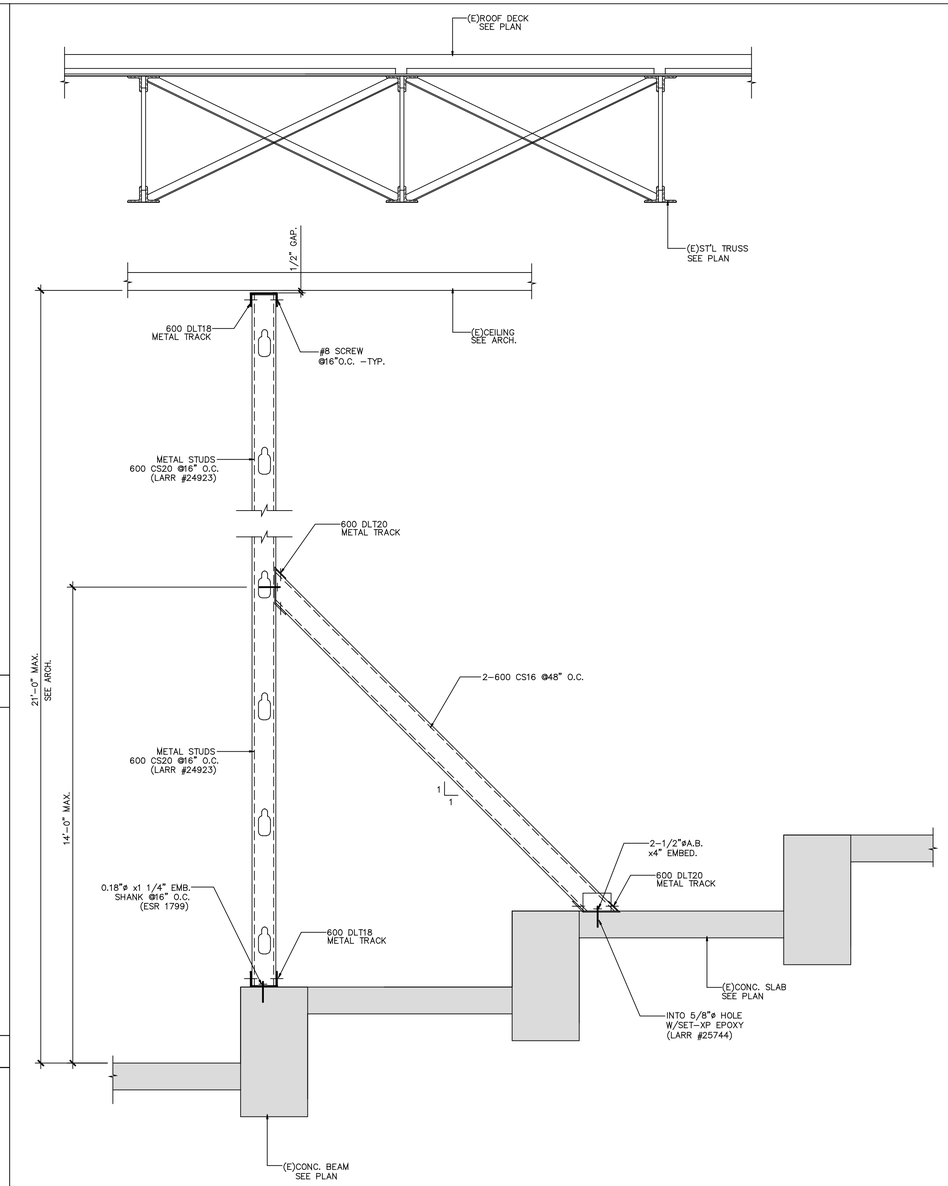

METAL STUDS SECTION | 6

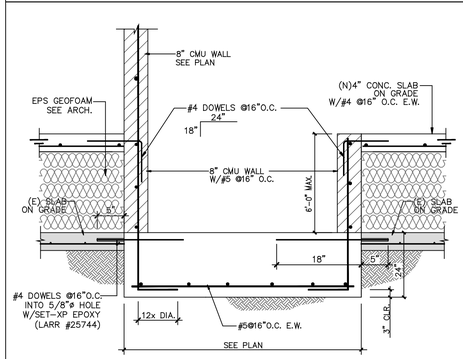

TYPICAL ELEVATOR SHAFT | 7

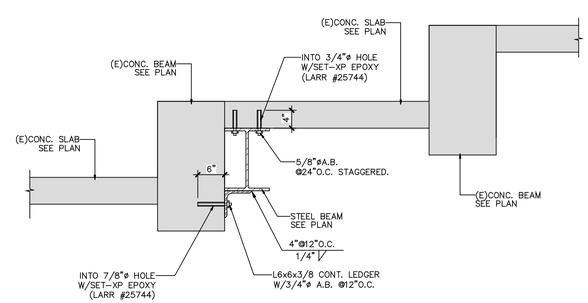

(E)CONC. BEAM & SLAB TO (N)ST'L BEAM CONNECTTION | 5

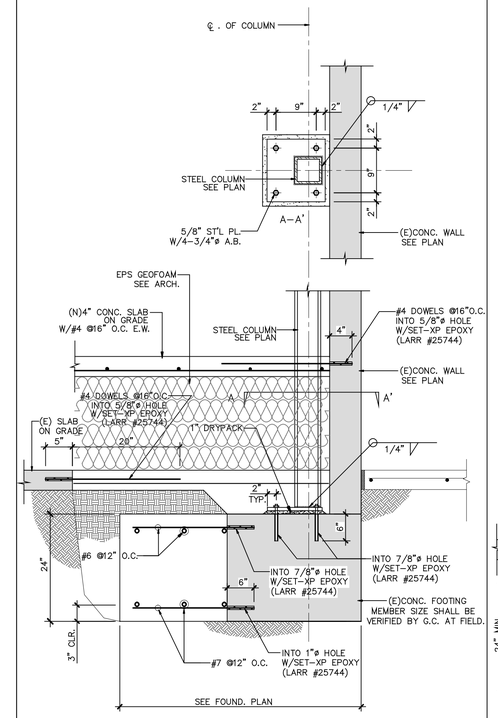

* SPECIAL INSPECTION REQUIRED.

STEEL COL. & FOOTING CONNECTTION | 3

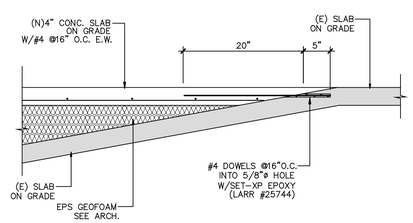

(E)S.O.G TO (N)S.O.G CONNECTTION | 4

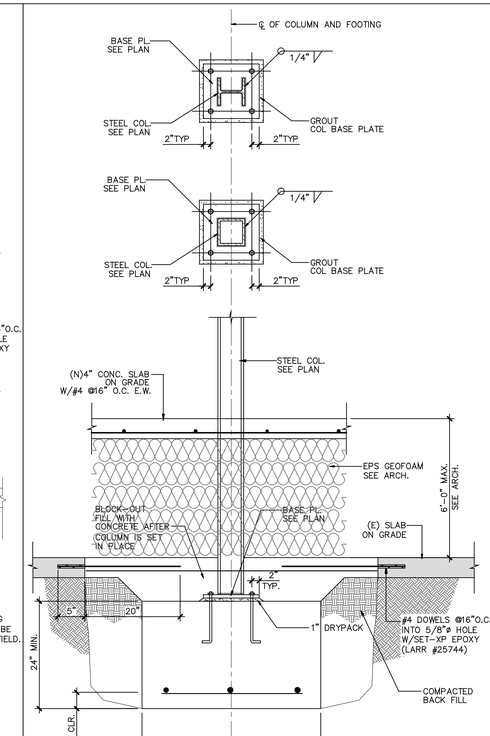

* SPECIAL INSPECTION REQUIRED.

STEEL COL. & FOOTING CONNECTTION | 1

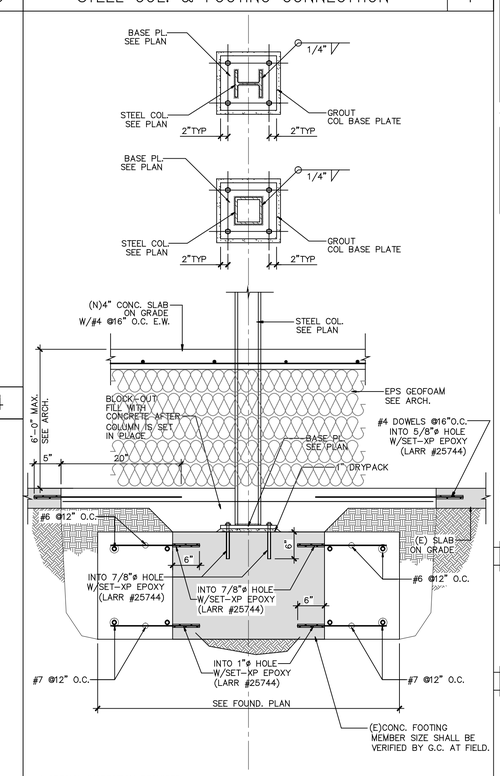

* SPECIAL INSPECTION REQUIRED.

STEEL COL. & FOOTING CONNECTTION | 2

ROBERT KABIAEK Architects And Associates, Inc.
18662 MacArthur Blvd. Ste.200
Irvine, California 92612
(949) 798-3838
www.rkaa.com

REGISTERED PROFESSIONAL ENGINEER
GENE TOUCK LEE
No. 3821
Exp.03-31-10
STRUCTURAL
STATE OF CALIFORNIA

date: 01-27-2011

COPYRIGHT 2001 ALL RIGHTS RESERVED. ROBERT KABIAEK & ASSOCIATES, INC. THIS DRAWING IS AN INSTRUMENT OF SERVICE. IT IS THE PROPERTY OF ROBERT KABIAEK ARCHITECTS, INC. & ASSOCIATES. IT MAY NOT BE REPRODUCED IN WHOLE OR PART, BY ANY MEANS, WITHOUT WRITTEN PERMISSION OF THE ARCHITECT.

1/27/11	CM/ATTEL ARCHITECTURE SUBMITTAL

NOTICE OF ALTERNATE BILLING OR PAYMENT CYCLE: THIS CONTRACT MAY ALLOW THE OWNER TO DELAYED THE SUBMISSION OF WORK OR PAYMENT BEYOND THE STANDARD 30 DAY THIRTY DATE. THIS CONTRACT MAY ALLOW THE OWNER TO MAKE PAYMENT ON SOME ALTERNATIVE SCHEDULE OR BY ALTERNATIVE METHOD OR PROCEDURE. PLEASE READ AND CAREFULLY. A WRITTEN DESCRIPTION OF SUCH OTHER BILLING AND/OR CYCLE APPLICABLE TO THE OWNER MAY BE OBTAINABLE FROM THE OWNER AT THE OFFICE LOCATED AT:
CHARLES COMPANY
CHINCHANDRES
9034 W. SUNSET BLVD
WEST HOLLYWOOD
CA 90069
THE OWNER OR DESIGNATED AGENT SHALL PROVIDE THIS WRITTEN DESCRIPTION ON REQUEST.

DEVELOPER:
CHARLES COMPANY
9034 W. SUNSET BLVD.
WEST HOLLYWOOD
CA 90069
TEL (310) 247-0900
FAX (310) 247-1525

CVS pharmacy
STORE #49557
909 S. ATLANTIC BLVD
LOS ANGELES, CA

design	RKA	drawn	RKA
check	RKA		

sheet S-7
of
job 09151

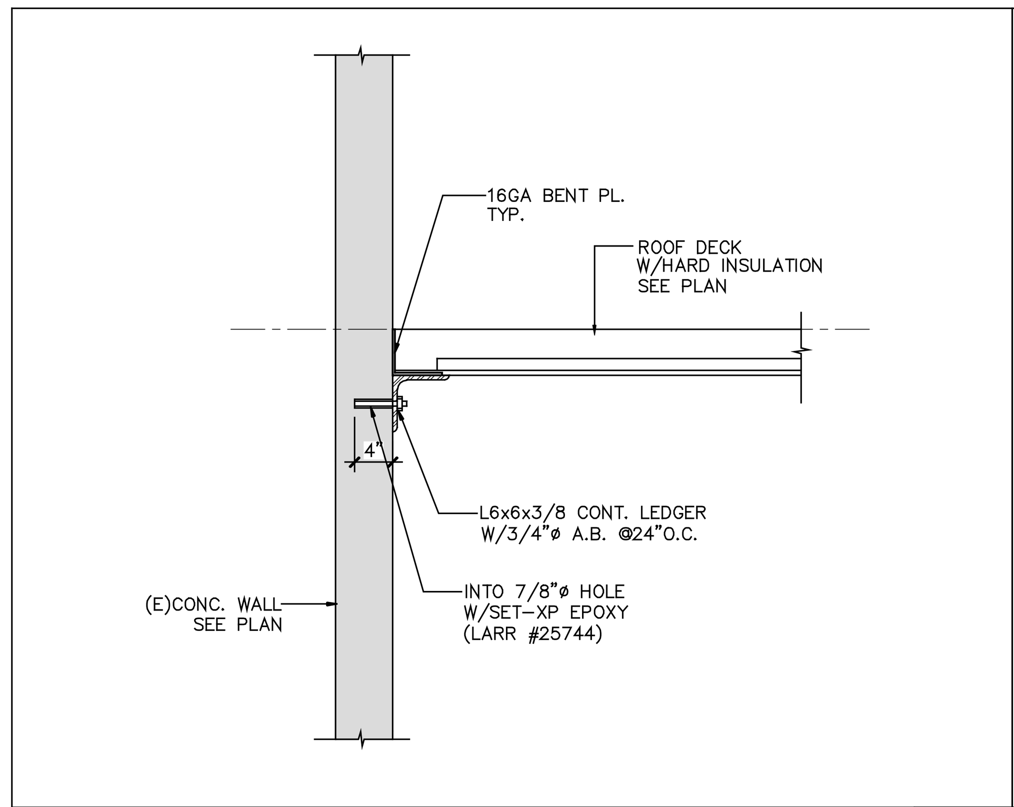

(E)CONC. WALL TO (N)ROOF DECK CONNECTTION 7

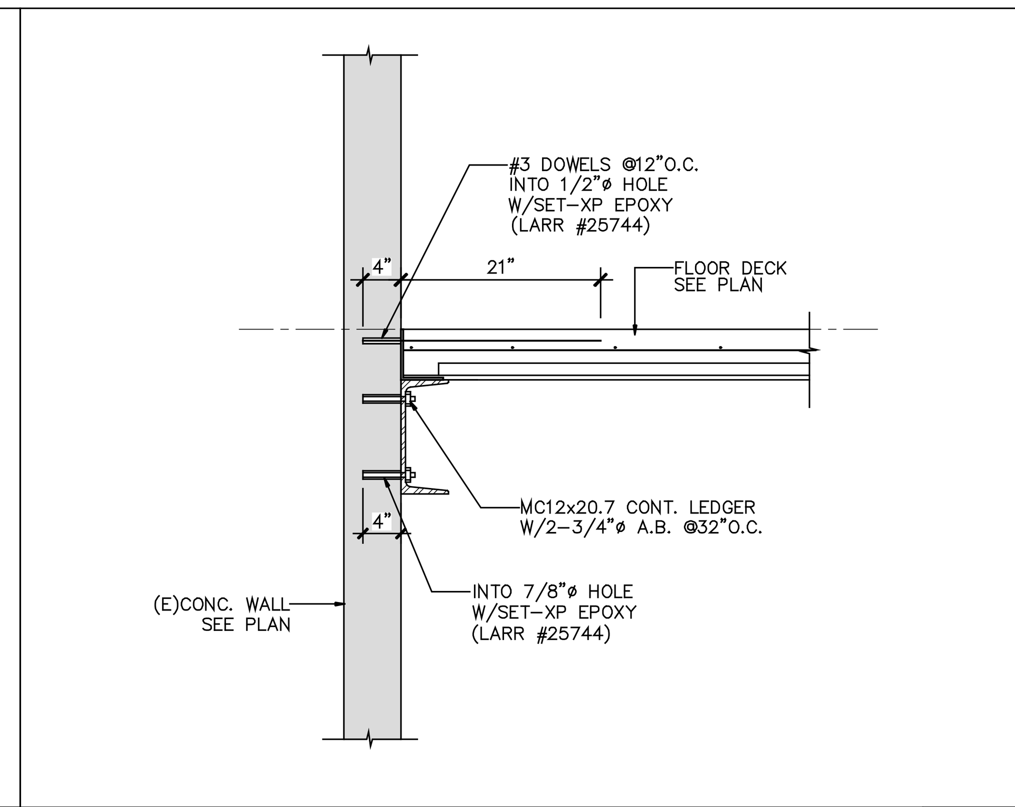

(E)CONC. WALL TO (N)FLOOR DECK CONNECTTION 3

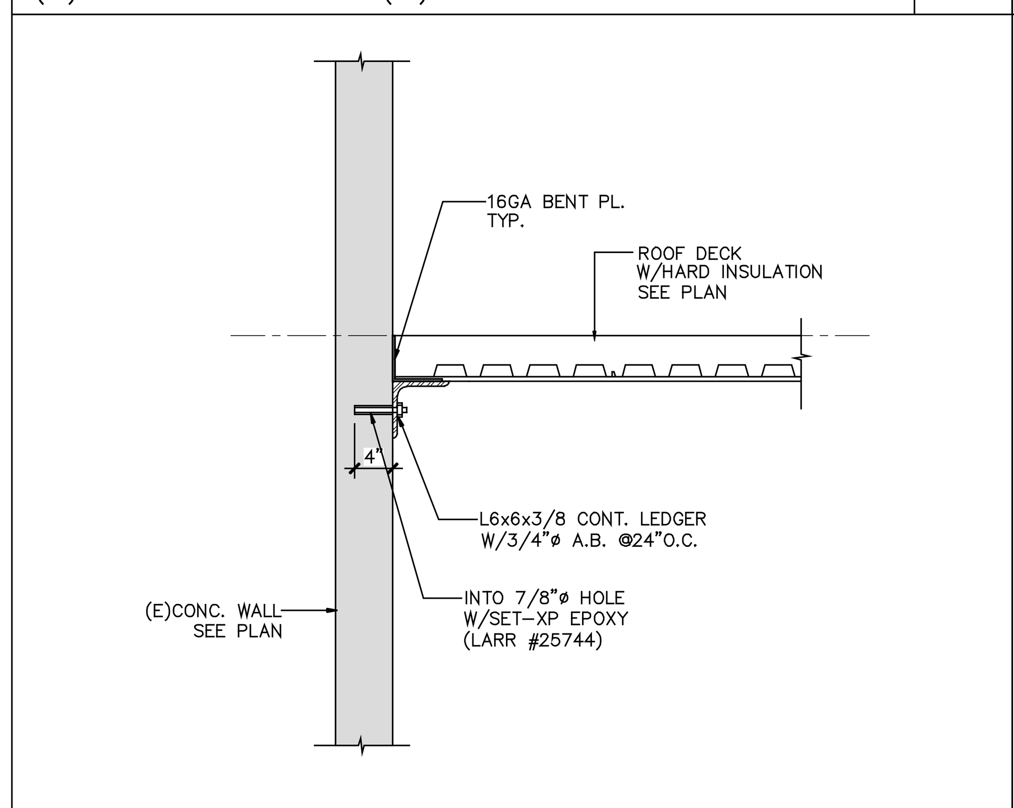

(E)CONC. WALL TO (N)ROOF DECK CONNECTTION 8

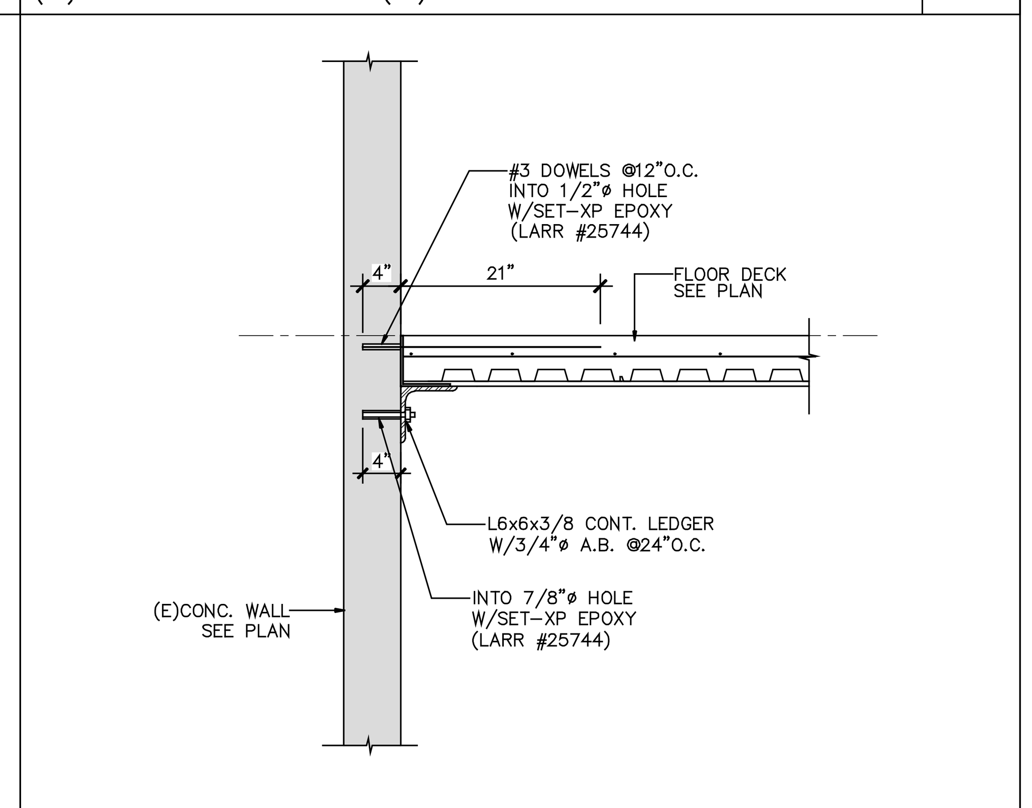

(E)CONC. WALL TO (N)FLOOR DECK CONNECTTION 4

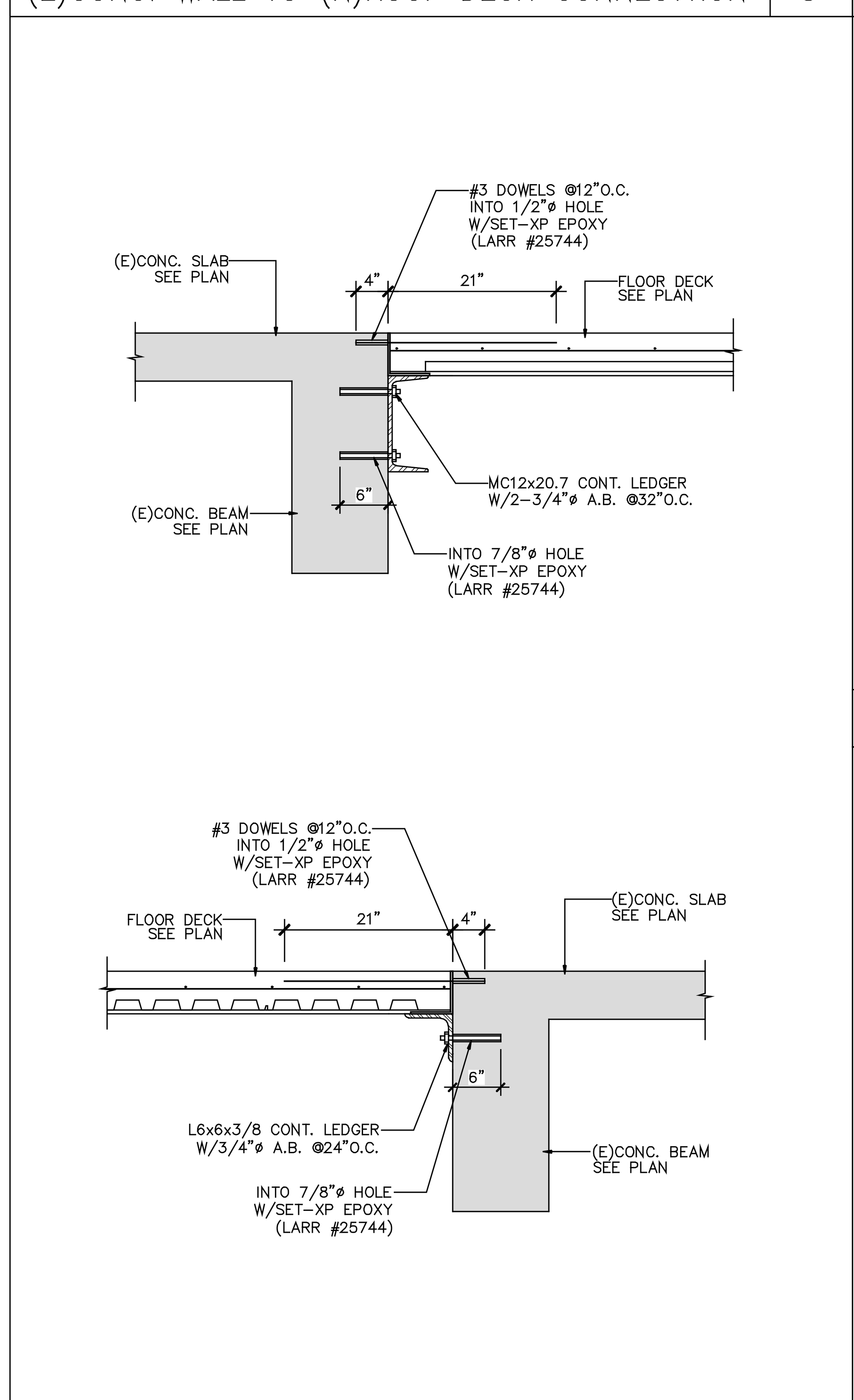

(E)CONC. BEAM TO (N)ROOF DECK CONNECTTION 9

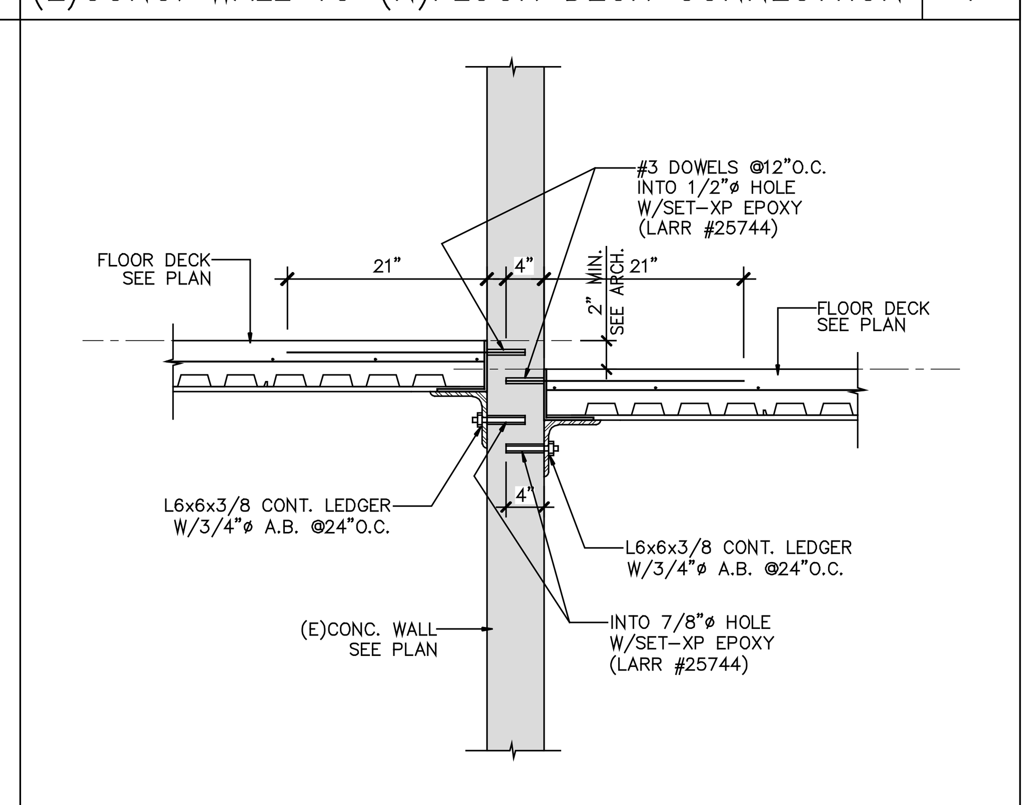

(E)CONC. WALL TO (N)FLOOR DECK CONNECTTION 5

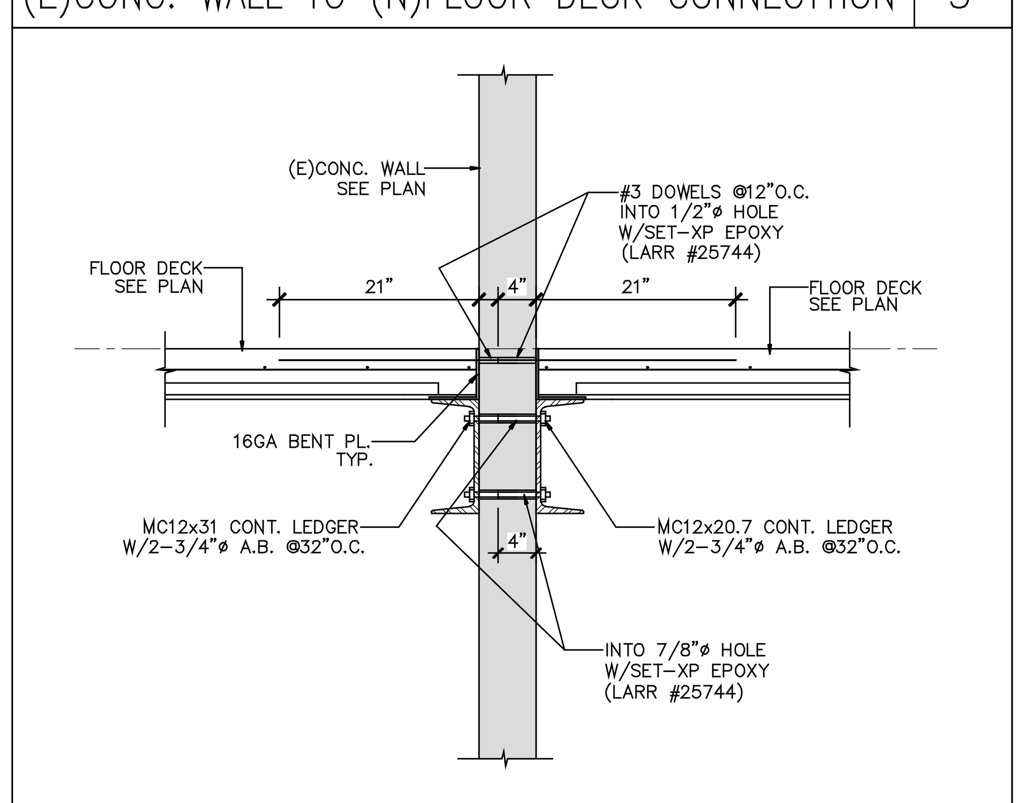

(E)CONC. WALL TO (N)FLOOR DECK CONNECTTION 6

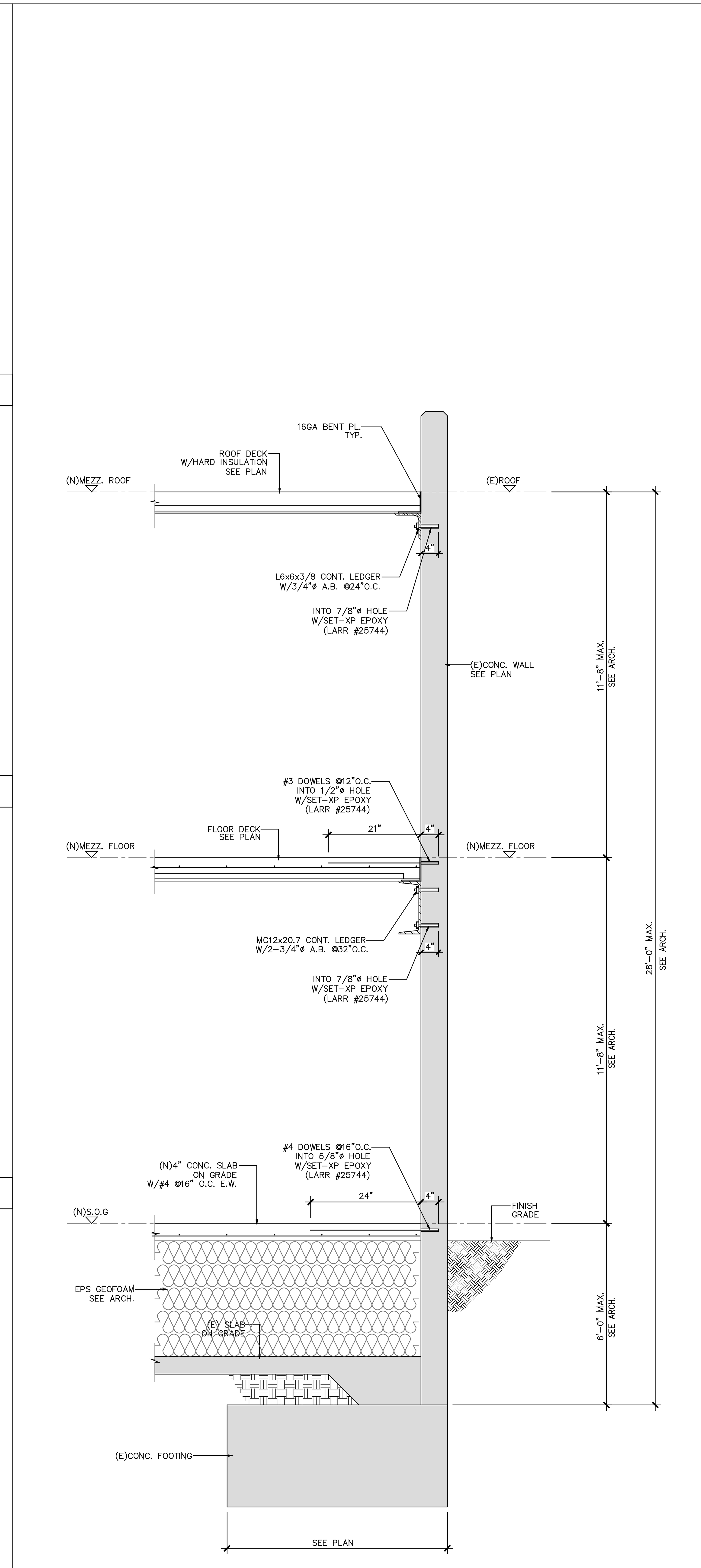

WALL SECTION 2

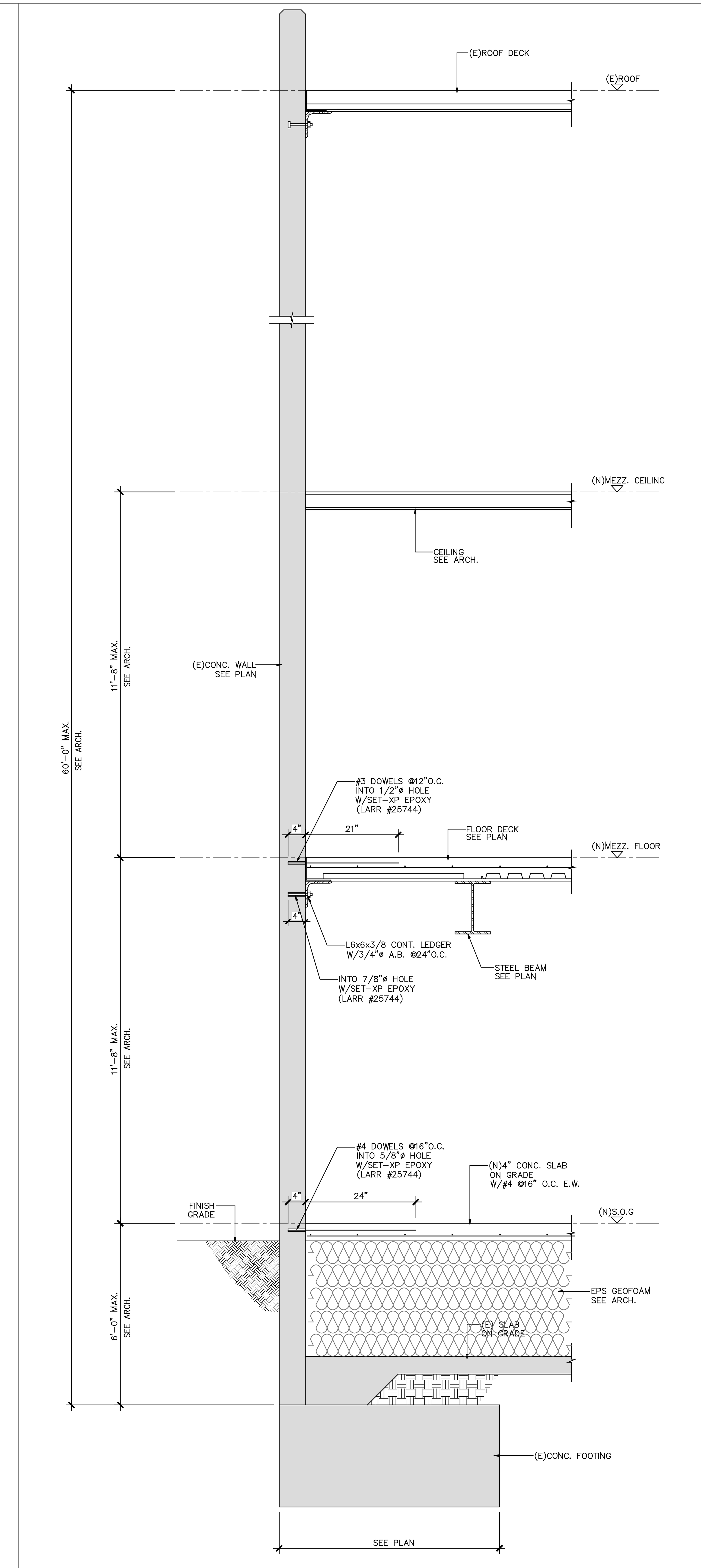

WALL SECTION 1

ROBERT KUBICEK Architects And Associates, Inc.
18662 MacArthur Blvd. Ste.200
Irvine, California 92612
(949) 798-3838
www.rkaa.com

REGISTERED PROFESSIONAL ENGINEER SANG YOUCK LEE No. 3821 Exp.03-31-10 STRUCTURAL STATE OF CALIFORNIA

date: 01-27-2011

COPYRIGHT 2011 , ALL RIGHTS RESERVED. ROBERT KUBICEK ARCHITECTS AND ASSOC. INC. THIS DRAWING IS AN INSTRUMENT OF SERVICE. IT IS THE PROPERTY OF ROBERT KUBICEK ARCHITECTS AND ASSOC. INC. AND MAY NOT BE REPRODUCED, OR REPRODUCTION HERE OF USED, WITHOUT WRITTEN PERMISSION OF THE ARCHITECT.

1/27/11	CHATTEL ARCHITECTURE SUBMITTAL

NOTICE OF ALTERNATE BILLING OR PAYMENT CYCLE: THIS CONTRACT MAY ALLOW THE OWNER TO REQUIRE THE SUBMISSION OF BILLINGS OR ESTIMATES IN BILLING CYCLES OTHER THAN THIRTY DAYS. THIS CONTRACT MAY ALLOW THE OWNER TO MAKE PAYMENT ON SOME ALTERNATIVE SCHEDULE AFTER CERTIFICATION AND APPROVAL OF BILLING AND ESTIMATES. A WRITTEN DESCRIPTION OF SUCH OTHER BILLING AND/OR CYCLE APPLICABLE TO THE PROJECT IS AVAILABLE FROM THE OWNER AT THE OFFICES OF
OWNERCOMPANY
OWNERADDRESS
OWNERCITYSTATEZIP
OWNERNAME
OWNERPHONE
OR HIS DESIGNATED AGENT SHALL PROVIDE THIS WRITTEN DESCRIPTION ON REQUEST

DEVELOPER:
CHARLES COMPANY
9034 W. SUNSET BLVD.
WEST HOLLYWOOD
CA 90069
TEL (310) 247-0900
FAX (310) 247-1525

CVS pharmacy
STORE #49557
909 S. ATLANTIC BLVD
LOS ANGELES, CA

design RKA
drawn RKA
check RKA

sheet S-8
of
job 09151

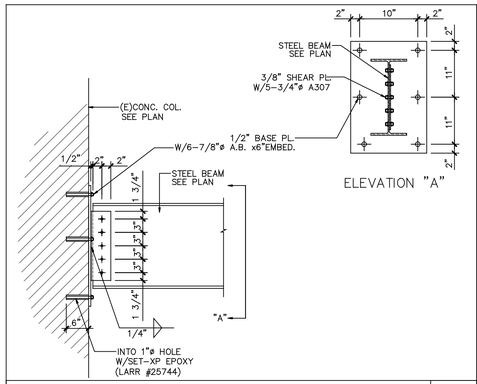

(E)CONC. COL. TO ST'L BEAM CONNECTION | 15

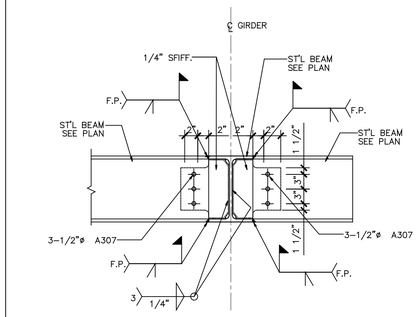

CANTILEVER BEAM TO ST'L BEAM CONNECTION | 11

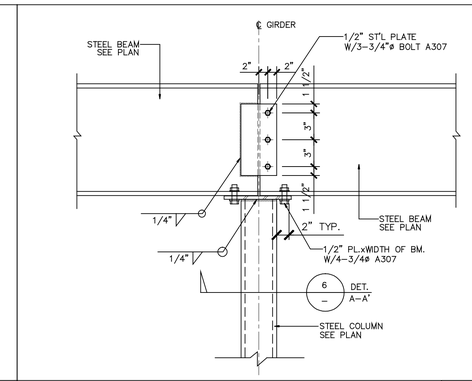

ST'L BEAM TO ST'L COL. CONNECTION | 7

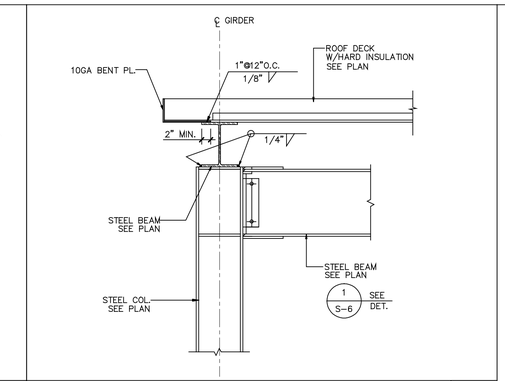

ST'L. BEAM TO ROOF DECK CONNECTTION | 3

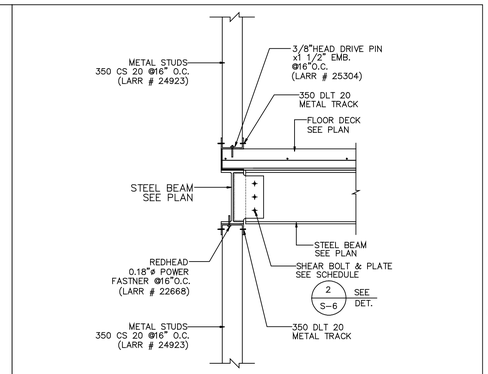

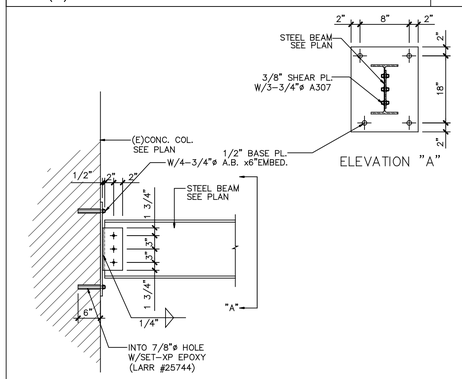

(E)CONC. COL. TO ST'L BEAM CONNECTION | 16

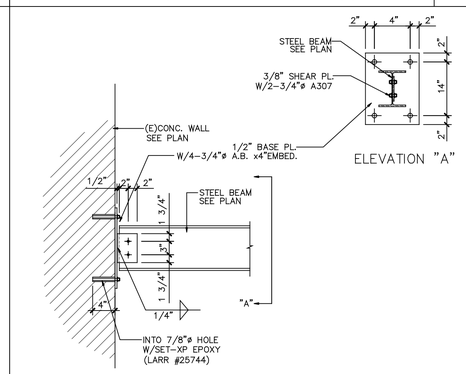

(E)CONC. WALL TO ST'L BEAM CONNECTION | 12

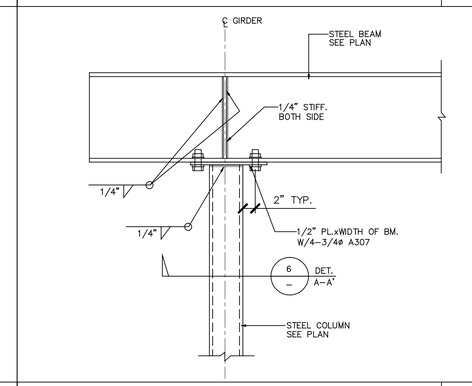

ST'L BEAM TO ST'L COL. CONNECTION | 8

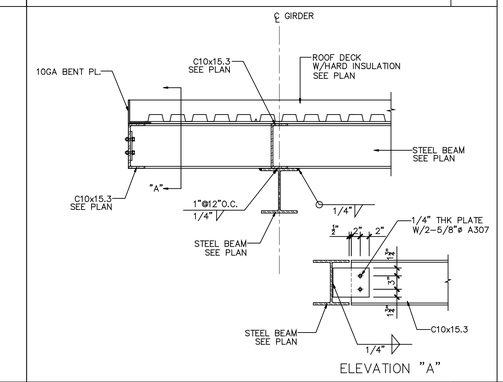

ST'L. BEAM TO ROOF DECK CONNECTTION | 4

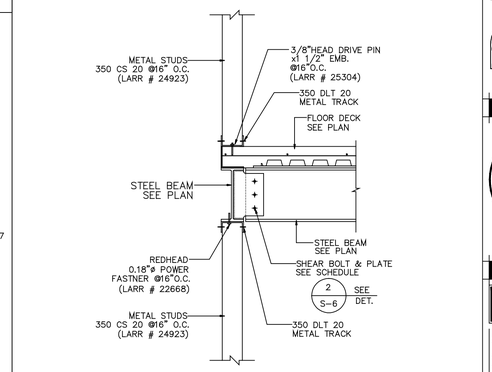

ST'L. BEAM TO FLOOR DECK CONNECTTION | 1

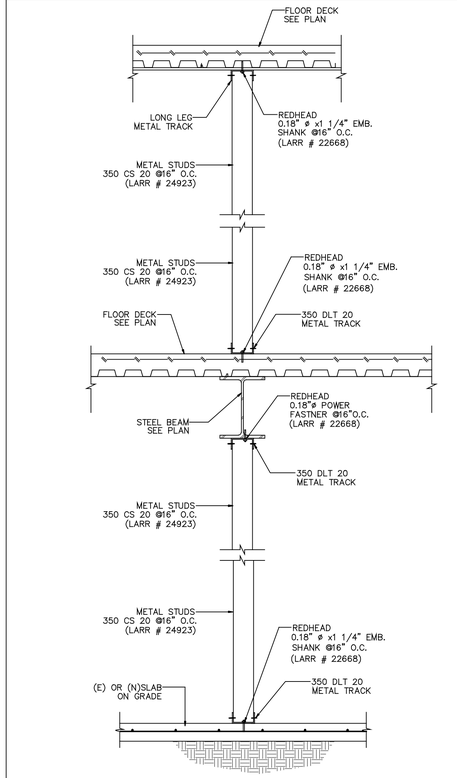

TYP. INT. METAL STUDS SECTION | 17

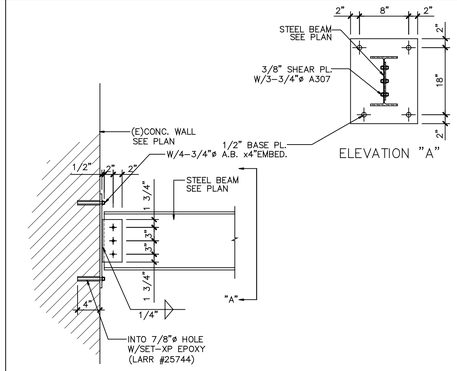

(E)CONC. WALL TO ST'L BEAM CONNECTION | 13

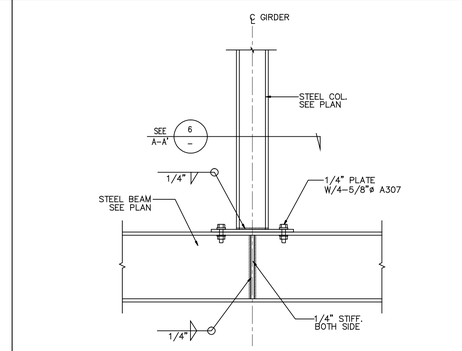

ST'L BEAM TO ST'L COL. CONNECTION | 9

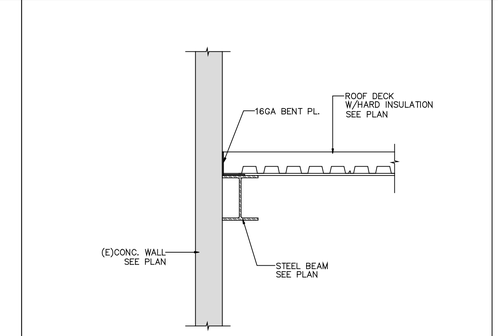

(E)CONC. WALL TO (N)ROOF DECK CONNECTTION | 5

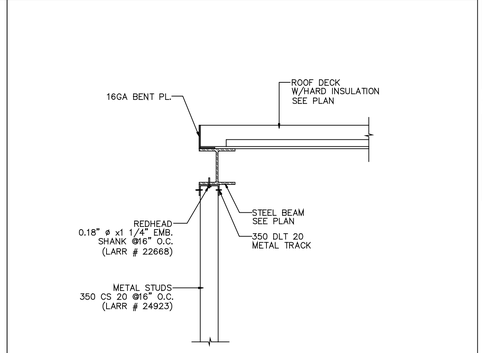

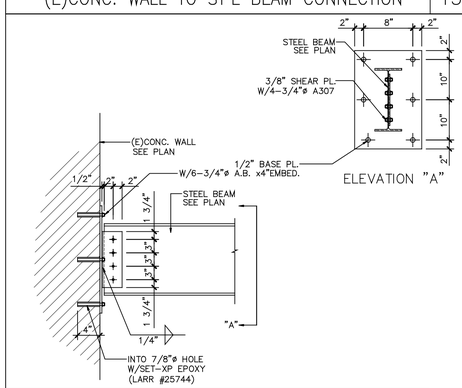

(E)CONC. WALL TO ST'L BEAM CONNECTION | 14

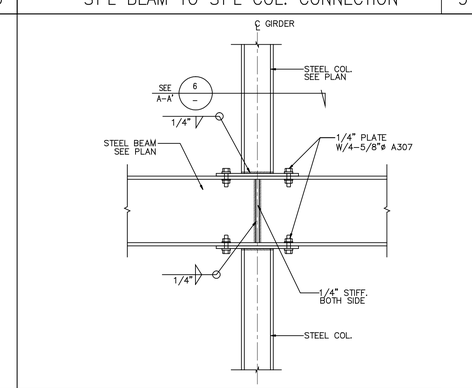

ST'L BEAM TO ST'L CRIP. COL. CONNECTION | 10

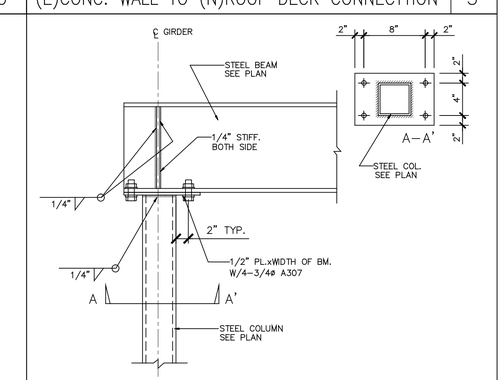

END BEAM TO ST'L COL. CONNECTION | 6

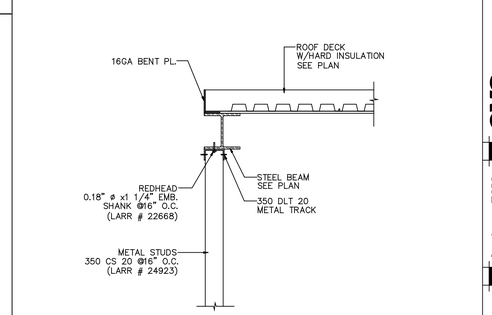

ST'L. BEAM TO ROOF DECK CONNECTTION | 2

ROBERT KUBICEK Architects And Associates, Inc.
18662 MacArthur Blvd. Ste.200
Irvine, California 92612
(949) 798-3638
www.rkaa.com

REGISTERED PROFESSIONAL ENGINEER
GENE TOUCK LEE
No. 3821
Exp.03-31-10
STRUCTURAL
STATE OF CALIFORNIA

date: 01-27-2011

COPYRIGHT 2001 ALL RIGHTS RESERVED. ROBERT KUBICEK ARCHITECTS AND ASSOCIATES, INC. THIS DRAWING IS AN INSTRUMENT OF SERVICE, IT IS THE PROPERTY OF ROBERT KUBICEK ARCHITECTS AND ASSOCIATES, INC. AND MAY NOT BE REPRODUCED OR REPRODUCTION HERE OF USED, WITHOUT WRITTEN PERMISSION OF THE ARCHITECT.

1/27/11	CKMTTEL ARCHITECTURE SUBMITTAL

NOTICE OF ALTERNATE BILLING OR PAYMENT CYCLE THIS CONTRACT MAY ALLOW THE OWNER TO REQUIRE THE SUBMISSION OF INVOICE ON A DATE OTHER THAN THE DATE OF PAYMENT DATA. THIS CONTRACT MAY ALLOW THE OWNER TO MAKE PAYMENT ON SOME ALTERNATIVE SCHEDULE OTHER THAN THE DATE OF PAYMENT DATA. SEE PLAN AND ESTIMATES. A WRITTEN DESCRIPTION OF THE OTHER BILLING AND/OR CYCLE APPLICABLE TO THE OWNER IS AVAILABLE FROM THE OWNER AT THE OFFICE OF:
OWNERCOMPANY
OWNERADDRESS
OWNERCITYSTATEZIP
OWNERPHONE
OWNERNAME
OR THE DESIGNATED AGENT SHALL PROVIDE THIS WRITTEN DESCRIPTION ON REQUEST.

DEVELOPER:
CHARLES COMPANY
9034 W. SUNSET BLVD.
WEST HOLLYWOOD
CA 90069
TEL (310) 247-0900
FAX (310) 247-1525

CVS pharmacy
STORE #40557
909 S. ATLANTIC BLVD
LOS ANGELES, CA

design RKA
drawn RKA
check RKA

sheet S-9
of
job 09151

Administrative Requirements:

A. The person with overall responsibility for construction or the person responsible for the installation of regulated manufactured devices shall post, or make available with the building permit(s) issued for the building, the Installation Certificate(s) for manufactured devices regulated by the Appliance Efficiency Regulations or Part 6. Such installation Certificate(s) shall be made available to the enforcement agency for all appropriate inspections. These certificates shall:
   i) Identify features required to verify compliance with the Appliance Efficiency Regulations and Part 6.
   ii) Include a statement indicating that the installed devices conform to the Appliance Efficiency Regulations and Part 6 and the requirements for such devices given in the plans and specifications approved by the local enforcement agency.
   iii) State the number of the building permit under which the construction or installation was performed. Sec. 10-103 (a) 3A

B. After installing wall, ceiling, or floor insulation, the installer shall make available to the enforcement agency or post in a conspicuous location in the building a certificate signed by the installer stating that the installation is consistent with the plans and specifications described in Section 10-103 (a) 2A. The certificate shall also state the manufacturer's name and material identification and the installed R-value. Sec. 10-103 (a) 4

C. The applicant shall file all Certificate(s) of Acceptance, required by the Mech-1-C, with the enforcement agency prior to receiving a final occupancy permit. The signer(s) shall be eligible under Division 3 of the Business and Professions code to sign such documents. Sec. 10-103 (b)

D. The builder shall provide the building owner or the person(s) responsible for building maintenance (in case of multi-tenant or centrally operated buildings) at occupancy the following:
   1) Operating information: The appropriate certificate(s) of compliance and a list of the features, materials, components, and mechanical devices installed in the building and instructions on how to operate them efficiently.
   2) Maintenance information: Required routine maintenance actions shall be clearly stated and incorporated on a readily accessible label. The label may be limited to identifying the operation and maintenance manual.
   3) Ventilation information: A description of the quantities of outdoor and recirculated air that the ventilation system are designed to provide to each area. Sec. 10-103 (c)

E. For building that have used a compliance option that requires field verification and diagnostic testing, the building department shall not approve the building until the building department has received a Certificate of Field Verification and Diagnostic Testing that has been signed and dated by the HERS Rater. Sec. 10-103 (e) 2

Mandatory Measures:

A. Manufactured fenestration products and exterior doors shall:
   1) Have a temporary label meeting the requirements of Sec. 10-111 (a) 1, not to be removed before inspection by the enforcement agency, listing the certified U-factor and SHGC, and certifying that the air leakage requirements of Sec. 116 (a) 1 are met for each product line; and
   2) Have a permanent label meeting the requirement of Sec. 10-111 (a) 2 if the product is rated using NFRC procedures. Sec. 116 (a)

B. Field fabricated fenestration and field-fabricated exterior doors shall be caulked between the fenestration products or exterior door and the building, and shall be weather stripped. EXCEPTION: Unframed glass doors and fire doors. Sec. 116 (b)

C. Joints and other openings in the building envelope that are potential sources of air leakage shall be caulked, gasketed, weather stripped, or otherwise sealed to limit infiltration and exfiltration. Sec. 117

D. The opaque portions of framed demising walls in nonresidential buildings shall be insulated with an installed R-value of no less than R-13 between framing members. Sec. 118 (f)

E. All insulating material shall be installed in compliance with the flamespread rating and smoke density requirements of the CBC. Sec. 118 (c)

F Any roof product used as a cool roof shall be certified and labeled in accordance with the requirements of Sec. 10-113 by the Cool Roof Rating Council (CRRC) and meet conditions set in Sec. 118 (i). Sec. 118 (i)

G. Heat pumps with supplementary electric resistance heaters shall have controls:
   1) That prevent supplementary heater operation when the heating load can be met by the heat pump alone; and
   2) In which the cut-on temperature for compression heating is higher than the cut-on temperature for supplementary heating, and the cut-off temperature for compression heating is higher than the cut-off temperature for supplementary heating. Sec. 112 (b)

H. The Lesser of the minimum rate of outdoor air required by Sec. 121 (b) 2, or three complete air changes shall be supplied to the entire building during the one-hour period immediately before the building is normally occupied. Sec. 121 (c) 2

I. Hotel/Motel Guest Room Thermostats shall have numeric temperature setpoints in degree F; and setpoint stops accessible only to authorized personnel, to restrict over-heating and over-cooling. Sec. 122 (c)

J. All air distribution system ducts and plenums, including, but not limited to, building cavities, mechanical closets, air-handler boxes and support platforms used as ducts or plenums, shall be installed, sealed and insulated to meet the requirements of chapter 6 of the California Mechanical Code. Supply-air and return-air ducts conveying heated or cooled air shall be insulated to a minimum installed level of R-8, unless ducts are in conditioned space. Sec. 124 (a)

K. The thermostatic controls for HVAC systems shall meet the following requirements as applicable:
   a) Each space conditioning zone shall be controlled by an individual thermostatic control that responds to temperature within the zone and meets the applicable requirements of Subsection (b).
   b) Each Thermostatic controls required by Subsection (a) shall be capable of being set locally or remotely by adjustment or selection of sensors to control:
      1) Comfort heating down to 55?F or lower.
      2) Comfort cooling up to 85?F or higher.
      3) Both heating and cooling, the thermostatic controls shall be capable of providing a temperature range or dead band of at least 5?F within which the supply of heating and cooling energy to the zone is shut off or reduced to a minimum. Sec. 122 (a) & (b)

L. Outdoor air supply and exhaust equipment shall be installed with dampers that automatically close upon fan shutdown. Sec. 122 (f)

M. Each space-conditioning system shall be installed with controls that comply with Items 1 and 2 below:
   1) Are capable of automatically shutting off the system during periods of non-use and shall have:
      a) An automatic time switch control device complying with Sec. 119(c), with an accessible manual override that allows operation of the system for up to 4 hours; or
      b) An occupancy sensor; or
      c) A four-hour timer that can be manually operated. EXCEPTION: Mechanical systems serving retail stores and associated malls, restaurants, grocery stores, churches, and theaters equipped with 7-day programmable timers.
   2) Automatically restart and temporarily operate the system as required to maintain:
      a) A setback heating thermostat setpoint, if the system provides mechanical heating; and EXCEPTION: Area with the design winter outdoor temperature of greater than 32?F.
      b) A setup cooling thermostat setpoint, if the system provides mechanical cooling. EXCEPTION: Area with the design summer outdoor temperature of less than 100?F.

   EXCEPTION: Systems serving hotel/motel guest rooms, if they have a readily accessible manual shut-off switch. Sec. 122 (e)

N. Demand Control Ventilation Devices (CO sensors) shall be installed in accordance with Sec. 121 (c) 4. Sec. 121 (c) 4

O. The piping for all space conditioning and service water heating systems shall be insulated in accordance with TABLE 123-A. Sec. 123

P. Water heater systems shall be equipped with automatic temperature controls capable of adjustment from the lowest to the highest acceptable temperature settings for the intended use as listed in Table 2, Chapter 49 of the ASHRAE Handbook, HVAC Applications Volume. Sec. 113 (a)

Q. Service water heating systems and equipment shall meet the applicable requirements of the Appliance Efficiency Regulations as required by Sec. 111. Sec. 113 (b)

R. Circulating service water heating systems shall have a control capable of automatically turning off the circulating pump when hot water is not required. Sec. 113 (c) 2

S. Lavatories in public restrooms shall have controls that limit the water supply temperature to 110?F. Sec. 113 (c) 3

T. Duct systems used with blower type equipment which are portions of a heating, cooling, absorption, evaporative cooling or outdoor air ventilation system shall be sized in accordance with Chapter 17 of the California Mechanical Code.

AIR SYSTEM REQUIREMENTS (Part 1 of 3) MECH-2C

PROJECT NAME: CVS – STORE #49557 DATE: 07/21/10

Item or System Tags (i.e. AC-1, RTU-1, HP-1)		AHU/CU-1,2	AHU/CU-3	AHU/CU-4,5
No. of Systems				
		Indicate Air Systems Type (Central, Single Zone, Package, VAV or etc...)		
		Indicate Page Reference on the Plans or Schedule list or list information below		
MANDATORY MEASURES	*T-24 Sections*			
Heating Equipment Efficiency	112(a)	3.3 COP	3.3 COP	8.2 HSPF
Cooling Equipment Efficiency	112(a)	11.0 EER	11.0 EER	13.0 SEER
HVAC or Heat Pump Thermostats	112(b), 112(c)	AUTO	AUTO	AUTO
Furnace Controls/Thermostat	112(c), 115(a)	N/A	N/A	N/A
Natural Ventilation	121(b)	N/A	N/A	N/A
Mechanical Ventilation	121(b)	1200/1200 CFM	1400 CFM	400/300 CFM
VAV Minimum Position Control	121(c)	Sec. 10-103 (a) 4	N/A	N/A
Demand Control Ventilation	121(c)	YES	YES	YES
Time Control	122(e)	PROG. SWITCH.	PROG. SWITCH.	PROG. SWITCH.
Setback and Setup Control	122(e)	N/A	N/A	N/A
Outdoor Damper Control	122(f)	N/A	N/A	N/A
Isolation Zones	122(g)	N/A	N/A	N/A
Pipe Insulation	123	Y	Y	Y
Duct Insulation	124	R-4.2	R-4.2	R-4.2
PRESCRIPTIVE MEASURES				
Calculated Design Heating Load	144(a & b)	109,000 BTUH	109,000 BTUH	57,000 BTUH
Calculated Design Cooling Load	144(a & b)	124,000 BTUH	124,000 BTUH	55,000 BTUH
Fan Control	144(c)	CONST. VOL.	CONST. VOL.	CONST. VOL.
DP Sensor Location	144(c)	N/A	N/A	N/A
Supply Pressure Reset (DDC only)	144(c)	N/A	N/A	N/A
Simultaneous Heat/Cool	144(d)	N/A	N/A	N/A
Economizer	144(e)	YES	YES	YES
Heat and Cool Air Supply Reset	144(f)	N/A	N/A	N/A
Electric Resistance Heating[1]	144(g)	N/A	N/A	N/A
Heat Rejection System	144 (h)	N/A	N/A	N/A
Air Cooled Chiller Limitation	144 (i)	N/A	N/A	N/A
Duct Leakage Sealing. If Yes, a MECH-4-A must be submitted	144(k)	NO	NO	NO

1. Total installed capacity (kBtu/hr) of all electric heat on this project exclusive of electric auxiliary heat for heat pumps. If electric heat is used explain which exceptions(s) to §144(g) apply.

CERTIFICATE OF COMPLIANCE and FIELD INSPECTION ENERGY CHECKLIST (Part 4 of 5) MECH-1C

Project Name: CVS – STORE #49557 Date: 07/21/10

Equipment Requiring Testing	# of	MECH-12A Fault Detection & Diagnostics for DX Units	MECH-13A Automatic Fault Detection & Diagnostics for Air & Zone	MECH-14A Distributed Energy Storage DX/AC Systems	MECH-15A Thermal Energy Storage (TES) Systems	Test Performed By:
Test Description						
AHU/CU-1,2	2	□	□	□	□	MECHANICAL CONTRACTOR
AHU/CU-3	1	□	□	□	□	MECHANICAL CONTRACTOR
AHU/CU-4,5	2	□	□	□	□	MECHANICAL CONTRACTOR
		□	□	□	□	
		□	□	□	□	
		□	□	□	□	
		□	□	□	□	
		□	□	□	□	
		□	□	□	□	
		□	□	□	□	
		□	□	□	□	
		□	□	□	□	
		□	□	□	□	
		□	□	□	□	
		□	□	□	□	
		□	□	□	□	
		□	□	□	□	
		□	□	□	□	
		□	□	□	□	
		□	□	□	□	
		□	□	□	□	
		□	□	□	□	
		□	□	□	□	
		□	□	□	□	

CERTIFICATE OF COMPLIANCE and FIELD INSPECTION ENERGY CHECKLIST (Page 2 of 5) MECH-1C

Project Name: CVS – STORE #49557 Date: 07/21/10

SPECIAL FEATURES INSPECTION CHECKLIST

The local enforcement agency should pay special attention to the items specified in this checklist. These items require special written justification and documentation, and special verification. The local enforcement agency determines the adequacy of the justification, and may reject a building or design that otherwise complies based on the adequacy of the special justification and documentation submitted.

Discrepancies:

CERTIFICATE OF COMPLIANCE and FIELD INSPECTION ENERGY CHECKLIST (Page 1 of 5) MECH-1C

Project Name: CVS – STORE #49557 Date: 07/21/10 Climate Zone: 9

Project Address: 909 S. ATLANTIC BLVD., LOS ANGELES, CA Conditioned Floor Area: 12,450 SF

General Information

Building Type: ☒ Nonresidential ☐ High-Rise Residential ☐ Hotel/Motel Guest Room

☐ Schools (Public School) ☐ Relocatable Public School Bldg. ☒ Conditioned Spaces ☐ Unconditioned Spaces

Phase of Construction: ☐ New Construction ☐ Addition ☒ Alteration

Approach of Compliance: ☐ Component ☐ Overall Envelope TDV Energy ☐ Unconditioned (file affidavit)

Front Orientation: N, E, S, W or in Degrees: E

HVAC SYSTEM DETAILS — FIELD INSPECTION ENERGY CHECKLIST

Equipment[2]	Inspection Criteria	Special Feature[1]	Pass	Fail - Describe Reason[3]
		Meets Criteria or Requirements		
Item or System Tags (i.e. AC-1, RTU-1, HP-1)	AHU/CU-1 AHU/CU-2	□	□	□
Equipment Type[4]:	SPLIT HEATPUMP	□	□	□
No of Systems	2	□	□	□
Max Allowed Heating Capacity	109,200 BTUH	□	□	□
Minimum Heating Efficiency	3.3 COP	□	□	□
Max Allowed Cooling Capacity	124,000 BTUH	□	□	□
Cooling Efficiency	11.0 EER	□	□	□
Duct Location/ R-Value	R-4.2	□	□	□
Duct Leakage Testing - If Yes, a MECH-4A must be submitted	NO	□	□	□
Economizer	YES	□	□	□
Thermostat	PROGRAMMABLE	□	□	□
Fan Control	CONST. VOL.	□	□	□

Equipment[2]	Inspection Criteria	Special Feature[1]	Pass	Fail - Describe Reason[3]
		FIELD INSPECTION ENERGY CHECKLIST		
Item or System Tags (i.e. AC-1, RTU-1, HP-1)	AHU/CU-3	□	□	□
Equipment Type[4]:	SPLIT HEATPUMP	□	□	□
No of Systems	1	□	□	□
Max Allowed Heating Capacity	109,200 BTUH	□	□	□
Minimum Heating Efficiency	3.3 COP	□	□	□
Max Allowed Cooling Capacity	124,000 BTUH	□	□	□
Cooling Efficiency	11.0 EER	□	□	□
Duct Location/ R-Value	R-4.2	□	□	□
Duct Leakage Testing - If Yes, a MECH-4A must be submitted	NO	□	□	□
Economizer	YES	□	□	□
Thermostat	PROGRAMMABLE	□	□	□
Fan Control	CONST. VOL.	□	□	□

1. Indicate special feature DETAILS on Page 2 of the Inspection Checklist Form.
2. If the Actual installed equipment performance efficiency and capacity is less than the Proposed (from the energy compliance submittal or from the building plans) the responsible party shall resubmit energy compliance to include the new changes.
3. For additional detailed discrepancy use Page 2 of the Inspection Checklist Form.
4. Indicate Equipment Type: Gas(Pkg or, Split), VAV, HP (Pkg or split), Hydronic, PTAC, or other

MECHANICAL VENTILATION AND REHEAT MECH-3C

PROJECT NAME: CVS – STORE #49557 DATE: 07/21/10

		MECHANICAL VENTILATION §121(b)2							REHEAT LIMITATION §144(d)					
		AREA BASIS			OCCUPANCY BASIS				VAV Minimum					
A	B	C	D	E	F	G	H	I	J	K	L	M	N	
Zone/ System	Condition Area (ft²)	CFM per ft²	Min CFM by Area B x C	Num of People	CFM per Person	Min CFM by Occupant E x F	REQ'D V.A. Max of D or G	Design Ventilation Air cfm	50% of Design Zone Supply cfm	B x 0.4 cfm/ft²	Max of Columns E, J, K, 30 cfm	Design minimum Air setpoint	Transfer Air	
AHU1	3960	0.25	990		15		990	1200						
AHU2	2940	0.25	735		15		735	1200						
AHU3	3240	0.25	810		15		810	1000						
AHU4	2380	0.15	357		15		357	400						
AHU5	1300	0.15	195		15		195	300						
					15									
					15									
					15									
					15									
					15									
					15									
			Totals					3087	3700	Column I Total Design Ventilation Air				

C	Minimum ventilation rate per Section §121, Table 121-A
E	Based on fixed seat or the greater of the expected number of occupants and 50% of the CBC occupant load for egress purposes for spaces without fixed seating.
H	Required Ventilation Air (REQ'D V.A.), is the larger of the ventilation rates calculated on an AREA BASIS or OCCUPANCY BASIS (Columns D or G).
I	Must be greater than or equal to H, or use Transfer Air (column N) to make up the difference.
J	Design fan supply cfm (Fan CFM) x 50%, or the design zone outdoor airflow rate per §121.
K	Condition area (ft²) x 0.4 cfm/ft², or
L	Maximum of Columns E, J, K, or 100 cfm
M	This must be less than or equal to Column I, and greater than or equal to the sum of Columns H plus N.
N	Transfer Air must be provided where the Required Ventilation Air (Column H) is greater than the Design Minimum Air (Column M). Where required, transfer air must be greater than or equal to the difference between the Required Ventilation air (Column H) and the Design Minimum Air (Column M), Column H minus M.

CERTIFICATE OF COMPLIANCE and FIELD INSPECTION ENERGY CHECKLIST (Part 5 of 5) MECH-1C

Project Name: CVS – STORE #49557 Date: 07/21/10

Documentation Author's Declaration Statement

- I certify that this Certificate of Compliance documentation is accurate and complete.

Name:	MAURICE YEE	Signature:	
Company:	RPM ENGINEERS, INC.	Date:	07/21/10
Address:	102 DISCOVERY	If Applicable CEA # CEPE #	
City/State/Zip	IRVINE CA 92618	Phone:	9494501229

Principal Mechanical Designer's Declaration Statement

- I am eligible under Division 3 of the California Business and Professions Code to accept responsibility for the mechanical design.
- This Certificate of Compliance identifies the mechanical features and performance specifications required for compliance with Title 24, Parts 1 and 6 of the California Code of Regulations.
- The design features represented on this Certificate of Compliance are consistent with the information provided to document this design on the other applicable compliance forms, worksheets, calculations, plans and specifications submitted to the enforcement agency for approval with this building permit application.

Name:	MAURICE YEE	Signature:	
Company Name:	RPM ENGINEERS, INC.	Date:	07/21/10
Address:	102 DISCOVERY	License #	M-34509
City/State/Zip	IRVINE CA 92618	Phone:	9494501229

Mandatory Measures

Indicate location on building plans of Note Block for Mandatory Measures

MECHANICAL COMPLIANCE FORMS & WORKSHEETS (check box if worksheet is included)

For detailed instructions on the use of this and all Energy Efficiency Standards compliance forms, refer to the 2008 Nonresidential Manual. Note: The Enforcement Agency may require all forms to be incorporated onto the building plans.

☒	MECH-1C	Certificate of Compliance. Required on plans for all submittals.
☒	MECH-2C	Mechanical Equipment Summary is required for all submittals.
☒	MECH-3C	Mechanical Ventilation and Reheat is required for all submittals with mechanical ventilation
☐	MECH-4C	Fan Power Consumption is required when for all prescriptive submittals.

CERTIFICATE OF COMPLIANCE and FIELD INSPECTION ENERGY CHECKLIST (Part 3 of 5) MECH-1C

Project Name: CVS – STORE #49557 Date: 07/21/10

Required Acceptance Tests

Designer:

This form is to be used by the designer and attached to the plans. Listed below are all the acceptance tests for mechanical systems. The designer is required to check the applicable boxes by all acceptance tests that apply and list all equipment that requires an acceptance test. If all equipment of a certain type requires a test, list the equipment description and the number of systems. The M# number designates the Section in the Appendix of the Nonresidential Reference Appendices Manual that describes the test. Since this form will be part of the plans, completion of this section will allow the responsible party to budget for the scope of work appropriately.

Enforcement Agency:

Systems Acceptance. Before occupancy permit is granted for a newly constructed building or space, or a new space-conditioning system serving a building or space is operated for normal use, all control devices serving the building or space shall be certified as meeting the Acceptance Requirements for Code Compliance.
Systems Acceptance. Before occupancy permit is granted. All newly installed HVAC equipment must be tested using the Acceptance Requirements.

The MECH-1C form is not considered a completed form and is not to be occupied by the building department unless the correct boxes are checked. The equipment requiring testing, person performing the test (Example: HVAC installer, TAB contractor, controls contractor, PE in charge of project) and what Acceptance test must be conducted. The following checked-off forms are required for ALL newly installed equipment. In addition a Certificate of Acceptance forms shall be submitted to the building department that certifies plans, specifications, installation certification, and operating and maintenance information meet the requirements of §10-103(b) and Title 24 Part 6. The building inspector must receive the properly filled out and signed forms before the building can receive final occupancy.

Equipment Requiring Testing or Verification	# of units	MECH-2A Outdoor Ventilation for VAV & CAV	MECH-3A Constant Volume & Single-Zone Unitary	MECH-4A Air Distribution Ducts	MECH-5A Economizer Controls	MECH-6A Demand Control Ventilation DCV	MECH-7A Supply Fan VAV	MECH-8A Valve Leakage Test	MECH-9A Supply Water Temp. Reset	MECH-10A Hydronic System Variable Flow Control	MECH-11A Automatic Demand Shed Control
Test Description											
AHU/CU-1,2	2	☒	□	□	☒	☒	□	□	□	□	□
AHU/CU-3	1	☒	□	□	☒	☒	□	□	□	□	□
AHU/CU-4,5	2	☒	□	□	☒	☒	□	□	□	□	□
		□	□	□	□	□	□	□	□	□	□
		□	□	□	□	□	□	□	□	□	□
		□	□	□	□	□	□	□	□	□	□
		□	□	□	□	□	□	□	□	□	□
		□	□	□	□	□	□	□	□	□	□
		□	□	□	□	□	□	□	□	□	□
		□	□	□	□	□	□	□	□	□	□
		□	□	□	□	□	□	□	□	□	□
		□	□	□	□	□	□	□	□	□	□
		□	□	□	□	□	□	□	□	□	□
		□	□	□	□	□	□	□	□	□	□
		□	□	□	□	□	□	□	□	□	□
		□	□	□	□	□	□	□	□	□	□
		□	□	□	□	□	□	□	□	□	□

CERTIFICATE OF COMPLIANCE and FIELD INSPECTION ENERGY CHECKLIST (Page 1 of 5) MECH-1C

Project Name: CVS – STORE #49557 Date: 07/21/10 Climate Zone: 9

Project Address: 909 S. ATLANTIC BLVD., LOS ANGELES, CA Conditioned Floor Area: 12,450 SF

General Information

Building Type: ☒ Nonresidential ☐ High-Rise Residential ☐ Hotel/Motel Guest Room

☐ Schools (Public School) ☐ Relocatable Public School Bldg. ☒ Conditioned Spaces ☐ Unconditioned Spaces

Phase of Construction: ☐ New Construction ☐ Addition ☒ Alteration

Approach of Compliance: ☐ Component ☐ Overall Envelope TDV Energy ☐ Unconditioned (file affidavit)

Front Orientation: N, E, S, W or in Degrees: E

HVAC SYSTEM DETAILS — FIELD INSPECTION ENERGY CHECKLIST

Equipment[2]	Inspection Criteria	Special Feature[1]	Pass	Fail - Describe Reason[3]
		Meets Criteria or Requirements		
Item or System Tags (i.e. AC-1, RTU-1, HP-1)	AHU/CU-1 AHU/CU-2	□	□	□
Equipment Type[4]:	SPLIT HEATPUMP	□	□	□
No of Systems	2	□	□	□
Max Allowed Heating Capacity	109,200 BTUH	□	□	□
Minimum Heating Efficiency	3.3 COP	□	□	□
Max Allowed Cooling Capacity	124,000 BTUH	□	□	□
Cooling Efficiency	11.0 EER	□	□	□
Duct Location/ R-Value	R-4.2	□	□	□
Duct Leakage Testing - If Yes, a MECH-4A must be submitted	NO	□	□	□
Economizer	YES	□	□	□
Thermostat	PROGRAMMABLE	□	□	□
Fan Control	CONST. VOL.	□	□	□

Equipment[2]	Inspection Criteria	Special Feature[1]	Pass	Fail - Describe Reason[3]
		FIELD INSPECTION ENERGY CHECKLIST		
Item or System Tags (i.e. AC-1, RTU-1, HP-1)	AHU/CU-4 AHU/CU-5	□	□	□
Equipment Type[4]:	SPLIT HEATPUMP	□	□	□
No of Systems	2	□	□	□
Max Allowed Heating Capacity	57,000 BTUH	□	□	□
Minimum Heating Efficiency	8.5 HSPF	□	□	□
Max Allowed Cooling Capacity	55,000 BTUH	□	□	□
Cooling Efficiency	14 SEER	□	□	□
Duct Location/ R-Value	R-4.2	□	□	□
Duct Leakage Testing - If Yes, a MECH-4A must be submitted	NO	□	□	□
Economizer	YES	□	□	□
Thermostat	PROGRAMMABLE	□	□	□
Fan Control	CONST. VOL.	□	□	□

1. Indicate special feature DETAILS on Page 2 of the Inspection Checklist Form.
2. If the Actual installed equipment performance efficiency and capacity is less than the Proposed (from the energy compliance submittal or from the building plans) the responsible party shall resubmit energy compliance to include the new changes.
3. For additional detailed discrepancy use Page 2 of the Inspection Checklist Form.
4. Indicate Equipment Type: Gas(Pkg or, Split), VAV, HP (Pkg or split), Hydronic, PTAC, or other

2008 Nonresidential Compliance Forms August 2009

18662 MacArthur Blvd. Ste.200
Irvine, California 92612
(949) 798-3838
www.rka.com

ROBERT KARIAN Architects And Associates, Inc.

REGISTERED PROFESSIONAL ENGINEER MAURICE E. YEE No. 30465 Exp.12-31-11 MECHANICAL STATE OF CALIFORNIA

date:

01/06/11 CHATTEL ARCH. SUBMITTAL
01/10/11 PLAN CHECK CORRECTIONS
01/27/11 CHATTEL ARCH. SUBMITTAL

DEVELOPER:
CHARLES COMPANY
9034 W. SUNSET BLVD.
WEST HOLLYWOOD
CA 90069
TEL (310) 247-0900
FAX (310) 247-1525

CVS pharmacy
STORE #49557
909 S. ATLANTIC BLVD
LOS ANGELES, CA

design RKA
drawn RKA
check RKA

sheet M-0.1
of
job 90151

RPM Engineers, Inc.
102 DISCOVERY
Irvine, Ca. 92618
Tel: 949-450-1229
Fax: 949-450-1464
Contact: Maurice E. Yee ext. 208

RPM# 10-282 01/27/11

TITLE 24 FORMS & NOTES

AUTOMATIC SHUTOFF

1. AIR-MOVING SYSTEMS SUPPLYING AIR IN EXCESS OF 2,000 CUBIC FEET PER MINUTE (CFM) TO ENCLOSED SPACES WITHIN BUILDINGS SHALL BE EQUIPPED WITH AN AUTOMATIC SHUTOFF. AUTOMATIC SHUTOFF SHALL BE ACCOMPLISHED BY INTERRUPTING THE POWER SOURCE OF THE AIR-MOVING EQUIPMENT UPON DETECTION OF SMOKE IN THE MAIN SUPPLY-AIR DUCT SERVED BY SUCH EQUIPMENT. SMOKE DETECTORS SHALL BE LABELED BY AN APPROVED AGENCY APPROVED AND LISTED BY CALIFORNIA STATE FIRE MARSHAL FOR AIR DUCT INSTALLATION AND SHALL BE INSTALLED IN ACCORDANCE WITH THE MANUFACTURER'S APPROVED INSTALLATION INSTRUCTIONS. 2007 CMC 609.
2. PRIOR TO MECHANICAL PERMIT FINAL, A SMOKE DETECTOR SHUTOFF TEST WILL BE REQUIRED.

DEMAND CONTROL VENTILATION SEQUENCE OF OPERATION: (RTU's 1 thru 5)

1. IF CO2 LEVEL IS BELOW 600 PPM, THEN THE ROOFTOP A/C UNIT SHALL OPERATE IN NORMAL MODE WITH MINIMUM OUTSIDE AIR PER ROOFTOP UNIT SCHEDULE.
2. IF CO2 LEVEL IS EQUAL TO OR GREATER THAN 600 PPM, THEN THE ROOFTOP A/C UNIT SHALL OPERATE IN ECONOMIZER MODE. WHEN CO2 LEVEL DROPS BELOW 600 PPM, THE ROOFTOP A/C UNIT SHALL BE SWITCHED BACK TO NORMAL MODE WITH MINIMUM OUTSIDE AIR PER ROOFTOP A/C UNIT SCHEDULE.
3. THE CO2 SENSORS MUST BE FACTORY CERTIFIED TO HAVE AN ACCURACY OF NO LESS THAN 75 PPM OVER FIVE-YEARS PERIOD WITHOUT CALIBRATION IN THE FIELD.

NOTES BY SYMBOL (O)

1. SUPPLY AIR DUCT. TRANSITION DOWN FROM UNIT AS REQUIRED IN THE VERTICAL TO RECTANGULAR ELBOW, SMOOTH RADIUS WITH TWO TWO TURNING VANES. REF.,SMACNA HVAC SYSTEM DUCT DESIGN PG.14.21, EXAMPLE "G", AND SMACNA DUCT CONSTRUCTION STANDARDS P.2.3, FIG. 2-2, TYPE RE 3 RADIUS ELBOW WITH VANES.
2. SUPPLY AIR DUCT. DIVIDER FLOW BRANCH. REF., SMACNA HVAC DUCT CONSTRUCTION STANDARDS P.2.7, FIG. 2-5, TYPE 4A.
3. RETURN AIR DUCT. TRANSITION DOWN FROM UNIT AS REQUIRED IN THE VERTICAL TO RECTANGULAR ELBOW, SMOOTH RADIUS WITHOUT TURNING VANES. REF., SMACNA HVAC SYSTEM DUCT DESIGN PG.14.20, EXAMPLE "F", AND SMACNA DUCT CONSTRUCTION STANDARDS P.2.3, FIG. 2-2, TYPE RE I RADIUS ELBOW.
4. DUCT DETECTORS SHALL BE ACCESSIBLE FOR CLEANING AND MOUNTED IN ACCORDANCE WITH THE MANUFACTURE'S INSTRUCTION. DUCT SMOKE DETECTOR REQUIRE A REMOTE LED INDICATOR THRU CEILING LEVEL AND REMOTE RESET AT FLOOR LEVEL. ACCESS DOORS AND/OR PANELS SHALL BE PROVIDED IN ACCORDANCE WITH NFPA 90A. THE LOCATION OF ALL DETECTORS IN AIR DUCT SYSTEMS SHALL BE PERMANENTLY AND CLEARLY IDENTIFIED AND RECORDED.

GENERAL NOTES

1. GENERAL NOTES ARE APPLICABLE TO ALL HVAC DRAWINGS.
2. PERFORM WORK IN ACCORDANCE WITH THE LATEST EDITIONS, REVISIONS, AMENDMENTS, OR SUPPLEMENTS OF APPLICABLE STATUTES, ORDINANCES, CODES OR REGULATIONS OF FEDERAL, STATE, AND LOCAL AUTHORITIES HAVING JURISDICTION IN EFFECT ON THE DATE BIDS ARE RECEIVED.
3. WHERE APPROVED STANDARDS HAVE BEEN ESTABLISHED BY OSHA, UNDERWRITERS LABORATORIES, AMERICAN CODES, ASA, ASHRAE, ARI, NEC, STATE FIRE INSURANCE REGULATION BODY, NFPA OR OTHERS. THESE STANDARDS SHALL BE FOLLOWED WHETHER OR NOT INDICATED ON THE DRAWING AND SPECIFICATIONS.
4. ALL DUCT TO BE OF 1" PRESSURE CLASS, UNLESS NOTED OTHERWISE.
5. REFER TO STRUCTURAL DRAWINGS FOR EXACT LOCATION OF ROOF-TOP EQUIPMENT.
6. LIGHT FIXTURE LOCATIONS TAKE PRECEDENCE OVER DIFFUSER AND GRILLE LOCATIONS. LOCATE DIFFUSERS AND GRILLES TO ACCOMMODATE LIGHTING LAYOUT.
7. PROVIDE TURNING VANES IN SUPPLY DUCT ELBOWS. PROVIDE TURNING VANES IN RETURN AND EXHAUST ELBOWS ONLY WHERE INDICATED ON PLANS.
8. DUCT SIZES SHOWN ARE NET FREE AREA.
9. DUCT HANGER DETAIL 4/M-1.3 IS APPLICABLE THROUGHOUT THE STORE, UNLESS NOTED OTHERWISE. DUCTWORK SHALL NOT BE SUPPORTED FROM BRIDGING. DO NOT USE FASTENERS THAT PENETRATE ROOF DECK.
10. REFER TO DETAIL 5/M-1.4 FOR DIFFUSER/RETURN GRILLE INSTALLATION.
11. ALL EXPOSED DUCT IN MEZZANINE AREA TO HAVE INTERNALLY LINED INSULATION.
12. REFER TO 1/M-1.3 FOR ALL BRANCH TAKE-OFF CONFIGURATIONS.
13. ALL PIPING, DUCTS VENTS, EXTENDING THROUGH WALLS & ROOF SHALL BE FLASHED, COUNTER FLASHED IN A WATERPROOF MANNER.

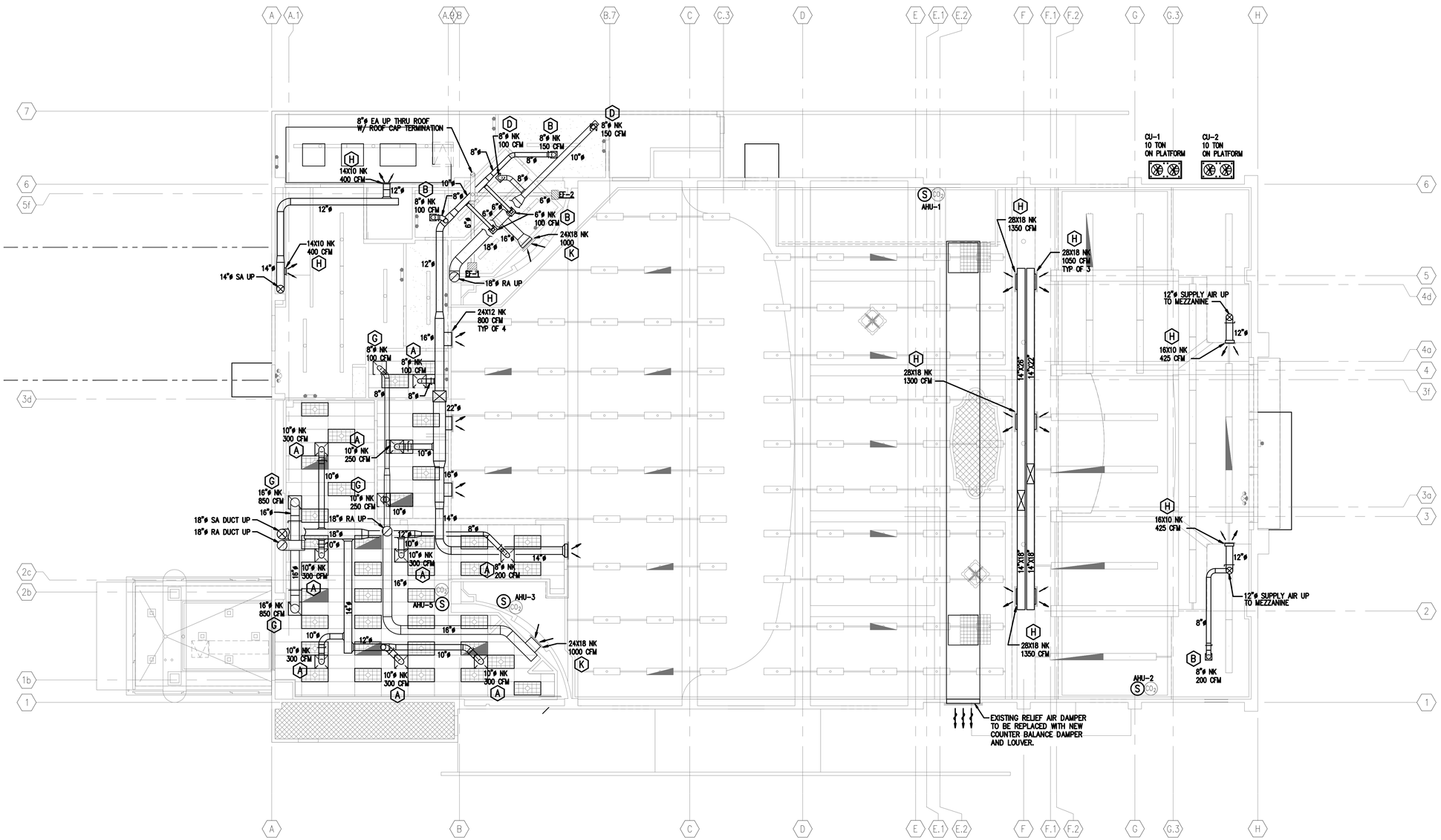

1 / M-1.1 HVAC FLOOR PLAN
SCALE: 1/8"=1'-0"

LEGEND

S	TEMPERATURE SENSOR
T	THERMOSTAT CONTROL
SD	SMOKE DETECTOR
CO_2	CO_2 SENSOR
	SUPPLY DUCT IN SECTION
	RETURN OR EXHAUST DUCT IN SECTION
	MITERED ELBOW
	RADIUS ELBOW
	SPLITTER
	VOLUME CONTROL DAMPER
FD	FIRE DAMPER (FD)
	CEILING SUPPLY DIFFUSER
	CEILING RETURN GRILLE
A	AIR DEVICE TYPE
1	NOTES BY SYMBOL

CFM	CUBIC FEET PER MINUTE	NK	NECK
DN.	DOWN	AFF	ABOVE FINISHED FLOOR
CD	CONDENSATE DRAIN	EXH.	EXHAUST
SA	SUPPLY AIR	REQ'D	REQUIRED
RA	RETURN AIR	DMPR	DAMPER
FD	FIRE DAMPER		

18662 MacArthur Blvd. Ste.200
Irvine, California 92612
(949) 798-3838
www.rka.com

ROBERT KABIAN Architects And Associates, Inc.

REGISTERED PROFESSIONAL ENGINEER MAURICE E. YEE No. 30465 Exp.12-31-11 MECHANICAL STATE OF CALIFORNIA

date:

01/06/11	CHATTEL ARCH. SUBMITTAL	
01/10/11	PLAN CHECK CORRECTIONS	
01/27/11	CHATTEL ARCH. SUBMITTAL	

DEVELOPER:
CHARLES COMPANY
9034 W. SUNSET BLVD.
WEST HOLLYWOOD
CA 90069
TEL (310) 247-0900
FAX (310) 247-1525

CVS pharmacy
STORE #49557
900 S. ATLANTIC BLVD
LOS ANGELES, CA

design RKA
drawn RKA
check RKA

sheet M-1.1
of
job 00151

RPM Engineers, Inc.
102 DISCOVERY
Irvine, Ca. 92618
Tel: 949-450-1229
Fax: 949-450-1454
Contact: Maurice E. Yee ext. 208

RPM# 10-282 01/27/11

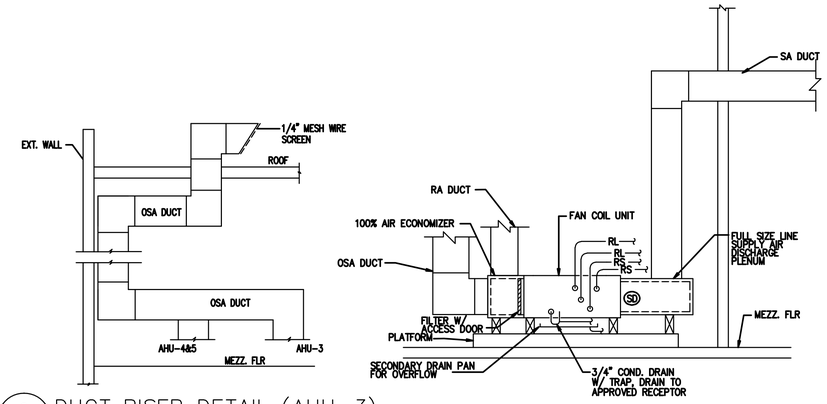

2 M-1.2 DUCT RISER DETAIL (AHU-3)
NOT TO SCALE

AUTOMATIC SHUTOFF

1. AIR-MOVING SYSTEMS SUPPLYING AIR IN EXCESS OF 2,000 CUBIC FEET PER MINUTE (CFM) TO ENCLOSED SPACES WITHIN BUILDINGS SHALL BE EQUIPPED WITH AN AUTOMATIC SHUTOFF. AUTOMATIC SHUTOFF SHALL BE ACCOMPLISHED BY INTERRUPTING THE POWER SOURCE OF THE AIR-MOVING EQUIPMENT UPON DETECTION OF SMOKE IN THE MAIN SUPPLY-AIR DUCT SERVED BY SUCH EQUIPMENT. SMOKE DETECTORS SHALL BE LABELED BY AN APPROVED AGENCY APPROVED AND LISTED BY CALIFORNIA STATE FIRE MARSHAL FOR AIR DUCT INSTALLATION AND SHALL BE INSTALLED IN ACCORDANCE WITH THE MANUFACTURER'S APPROVED INSTALLATION INSTRUCTIONS. 2007 CMC 609.

2. MULTIPLE UNITS WITH AN AGREGATE EXCEEDING 2000 CFM SHALL EACH HAVE SMOKE DETECTORS INTERLOCKED FOR GLOBAL SHUTDOWN UPON ANY DETECTOR SENSING SMOKE.

3. PRIOR TO MECHANICAL PERMIT FINAL, A SMOKE DETECTOR SHUTOFF TEST WILL BE REQUIRED.

DEMAND CONTROL VENTILATION SEQUENCE OF OPERATION: (RTU's 1 thru 5)

1. IF CO2 LEVEL IS BELOW 600 PPM, THEN THE ROOFTOP A/C UNIT SHALL OPERATE IN NORMAL MODE WITH MINIMUM OUTSIDE AIR PER ROOFTOP UNIT SCHEDULE.
2. IF CO2 LEVEL IS EQUAL TO OR GREATER THAN 600 PPM, THEN THE ROOFTOP A/C UNIT SHALL OPERATE IN ECONOMIZER MODE. WHEN CO2 LEVEL DROPS BELOW 600 PPM, THE ROOFTOP A/C UNIT SHALL BE SWITCHED BACK TO NORMAL MODE WITH MINIMUM OUTSIDE AIR PER ROOFTOP A/C UNIT SCHEDULE.
3. THE CO2 SENSORS MUST BE FACTORY CERTIFIED TO HAVE AN ACCURACY OF NO LESS THAN 75 PPM OVER FIVE-YEARS PERIOD WITHOUT CALIBRATION IN THE FIELD.

NOTES BY SYMBOL (O)

1. SUPPLY AIR DUCT. TRANSITION DOWN FROM UNIT AS REQUIRED IN THE VERTICAL TO RECTANGULAR ELBOW, SMOOTH RADIUS WITH TWO TWO TURNING VANES. REF.,SMACNA HVAC SYSTEM DUCT DESIGN PG.14.21, EXAMPLE "G", AND SMACNA DUCT CONSTRUCTION STANDARDS P.2.3, FIG. 2-2, TYPE RE 3 RADIUS ELBOW WITH VANES.
2. SUPPLY AIR DUCT. DIVIDER FLOW BRANCH. REF., SMACNA HVAC DUCT CONSTRUCTION STANDARDS P.2.7, FIG. 2-5, TYPE 4A.
3. RETURN AIR DUCT. TRANSITION DOWN FROM UNIT AS REQUIRED IN THE VERTICAL TO RECTANGULAR ELBOW, SMOOTH RADIUS WITHOUT TURNING VANES. REF., SMACNA HVAC SYSTEM DUCT DESIGN PG.14.20, EXAMPLE "F", AND SMACNA DUCT CONSTRUCTION STANDARDS P.2.3, FIG. 2-2, TYPE RE I RADIUS ELBOW.
4. DUCT DETECTORS SHALL BE ACCESSIBLE FOR CLEANING AND MOUNTED IN ACCORDANCE WITH THE MANUFACTURE'S INSTRUCTION. DUCT SMOKE DETECTOR REQUIRE A REMOTE LED INDICATOR THRU CEILING LEVEL AND REMOTE RESET AT FLOOR LEVEL. ACCESS DOORS AND/OR PANELS SHALL BE PROVIDED IN ACCORDANCE WITH NFPA 90A. THE LOCATION OF ALL DETECTORS IN AIR DUCT SYSTEMS SHALL BE PERMANENTLY AND CLEARLY IDENTIFIED AND RECORDED.

GENERAL NOTES

1. GENERAL NOTES ARE APPLICABLE TO ALL HVAC DRAWINGS.
2. PERFORM WORK IN ACCORDANCE WITH THE LATEST EDITIONS, REVISIONS, AMENDMENTS, OR SUPPLEMENTS OF APPLICABLE STATUTES, ORDINANCES, CODES OR REGULATIONS OF FEDERAL, STATE, AND LOCAL AUTHORITIES HAVING JURISDICTION IN EFFECT ON THE DATE BIDS ARE RECEIVED.
3. WHERE APPROVED STANDARDS HAVE BEEN ESTABLISHED BY OSHA, UNDERWRITERS LABORATORIES, AMERICAN CODES, ASA, ASHRAE, ARI, NEC, STATE FIRE INSURANCE REGULATION BODY, NFPA OR OTHERS. THESE STANDARDS SHALL BE FOLLOWED WHETHER OR NOT INDICATED ON THE DRAWING AND SPECIFICATIONS.
4. ALL DUCT TO BE OF 1" PRESSURE CLASS, UNLESS NOTED OTHERWISE.
5. REFER TO STRUCTURAL DRAWINGS FOR EXACT LOCATION OF ROOF-TOP EQUIPMENT.
6. LIGHT FIXTURE LOCATIONS TAKE PRECEDENCE OVER DIFFUSER AND GRILLE LOCATIONS. LOCATE DIFFUSERS AND GRILLES TO ACCOMMODATE LIGHTING LAYOUT.
7. PROVIDE TURNING VANES IN SUPPLY DUCT ELBOWS. PROVIDE TURNING VANES IN RETURN AND EXHAUST ELBOWS ONLY WHERE INDICATED ON PLANS.
8. DUCT SIZES SHOWN ARE NET FREE AREA.
9. DUCT HANGER DETAIL 4/M-1.3 IS APPLICABLE THROUGHOUT THE STORE, UNLESS NOTED OTHERWISE. DUCTWORK SHALL NOT BE SUPPORTED FROM BRIDGING. DO NOT USE FASTENERS THAT PENETRATE ROOF DECK.
10. REFER TO DETAIL 5/M-1.4 FOR DIFFUSER/RETURN GRILLE INSTALLATION.
11. ALL EXPOSED DUCT IN MEZZANINE AREA TO HAVE INTERNALLY LINED INSULATION.
12. REFER TO 1/M-1.3 FOR ALL BRANCH TAKE-OFF CONFIGURATIONS.
13. ALL PIPING, DUCTS VENTS, EXTENDING THROUGH WALLS & ROOF SHALL BE FLASHED, COUNTER FLASHED IN A WATERPROOF MANNER.

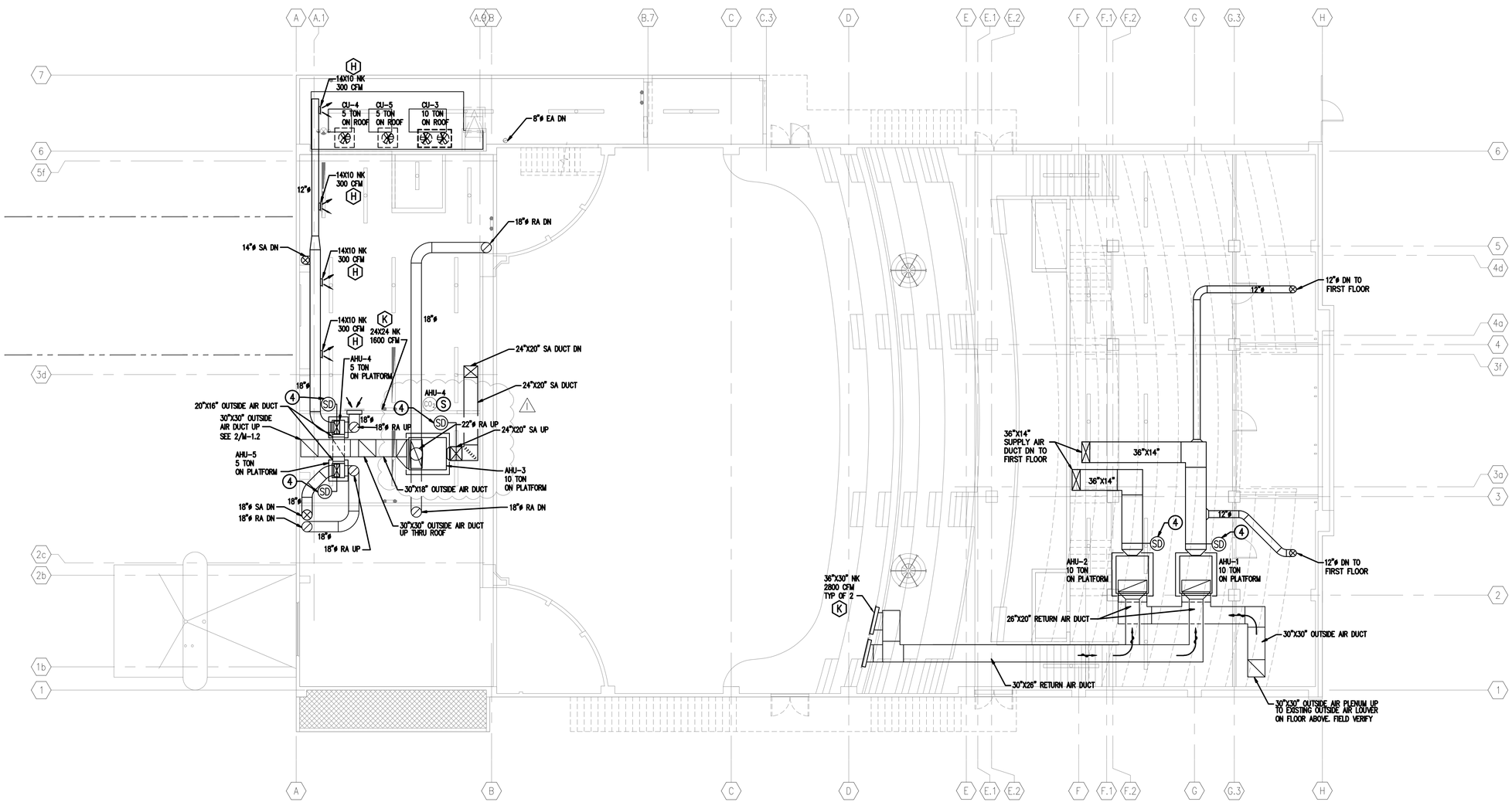

1 M-1.2 HVAC MEZZANINE PLAN
SCALE: 1/8"=1'-0"

LEGEND

(S)	TEMPERATURE SENSOR
(T)	THERMOSTAT CONTROL
(SD)	SMOKE DETECTOR
(CO_2)	CO_2 SENSOR
	SUPPLY DUCT IN SECTION
	RETURN OR EXHAUST DUCT IN SECTION
	MITERED ELBOW
	RADIUS ELBOW
	SPLITTER
	VOLUME CONTROL DAMPER
FD	FIRE DAMPER (FD)
	CEILING SUPPLY DIFFUSER
	CEILING RETURN GRILLE
(A)	AIR DEVICE TYPE
(1)	NOTES BY SYMBOL

CFM	CUBIC FEET PER MINUTE	NK	NECK
DN.	DOWN	AFF	ABOVE FINISHED FLOOR
CD	CONDENSATE DRAIN	EXH.	EXHAUST
SA	SUPPLY AIR	REQ'D	REQUIRED
RA	RETURN AIR	DMPR	DAMPER
FD	FIRE DAMPER		

RPM Engineers, Inc.
102 DISCOVERY
Irvine, Ca. 92618
Tel: 949-450-1229
Fax: 949-450-1454
Contact: Maurice E. Yee ext. 206

18662 MacArthur Blvd. Ste.200
Irvine, California 92612
(949) 798-3838
www.rka.com
ROBERT KABIAN Architects And Associates, Inc.

REGISTERED PROFESSIONAL ENGINEER MAURICE E. YEE No. 30465 Exp.12-31-11 MECHANICAL STATE OF CALIFORNIA

date:

01/06/11	CHATEL ARCH. SUBMITTAL	
01/10/11	PLAN CHECK CORRECTIONS	
01/27/11	CHATEL ARCH. SUBMITTAL	

THIS DRAWING IS THE PROPERTY OF ROBERT KABIAN ARCHITECTS AND ASSOCIATES, INC. THE REPRODUCTION, ALTERATION OR USE FOR ANY PURPOSE OTHER THAN THAT AUTHORIZED BY ROBERT KABIAN ARCHITECTS AND ASSOCIATES, INC. IS PROHIBITED.

DEVELOPER:
CHARLES COMPANY
9034 W. SUNSET BLVD.
WEST HOLLYWOOD
CA 90069
TEL (310) 247-0900
FAX (310) 247-1525

CVS pharmacy
STORE #49557
908 S. ATLANTIC BLVD
LOS ANGELES, CA

design RKA
drawn RKA
check RKA

sheet M-1.2
of
job 09151

RPM# 10-282 01/27/11

FANS

MARK	SERVICE	LOCATION	MANUFACTURER AND MODEL NO.	CFM	ESP S.P.	DRIVE TYPE	ELECTRICAL DATA HP	VOLT/PHASE	AMP.	SONES	REMARKS
EF-1	EXHAUST	MEN'S RESTROOMS	NUTONE QTXEN150	150	0.1	DIRECT	___	120/1/60	0.5	1.4	①②③④
EF-2	EXHAUST	WOMEN'S RESTROOMS	NUTONE QTXEN150	150	0.1	DIRECT	___	120/1/60	0.5	1.4	①②③④

① SWITCH AS INDICATED ON DRAWING E-1.1. ② FURNISHED AND INSTALLED BY MECHANICAL CONTRACTOR. WIRED BY ELECTRICAL CONTRACTOR.
③ BACKDRAFT DAMPER. ④ ROOF CAP CURB MOUNT.

DESIGN CONDITIONS

CONDITION	SUMMER	WINTER
OUTDOOR	74°F DB/64°F WB	37°F DB
INDOOR	75°F DB/50% RH	68°F DB

1. SITE ELEVATION: xx FEET
2. OUTDOOR DESIGN CONDITIONS DETERMINED FROM T-24 CLIMATIC DATA, _____

SPLIT SYSTEM HEATPUMP SCHEDULE

MARK	SERVICE	CFM	OA CFM	ESP IN WC.	MAX HP	NET COOLING CAPACITIES (MBH) TOTAL	SENSIBLE	Edb °F	Ewb °F	LAT °F	HEATING CAPACITY (MBH) TOTAL	EAT °F	OAT °F	UNIT WT (LBS)	TOTAL UNIT WT (LBS)	BASIS OF DESIGN	ELECTRICAL VOLTAGE	MCA	MFS	EER (BTUH/W)	REMARKS
AHU-1	RETAIL AREA	4000	1200	0.5	2									468	620	YORK NC120	208V/3ø	14.2	15		①②④⑤⑥⑨⑪
CU-1						124	93	80	67	55.0	109.2	70	50	560	560	YORK PC120	208V/3ø	41.2	50	11.0	①⑨⑩
AHU-2	RETAIL AREA, FRONT C.O., ENTRANCE AREA	4000	1200	0.5	2									468	620	YORK NC120	208V/3ø	14.2	15		①②④⑤⑥⑨⑪
CU-2						124	93	80	67	55.0	109.2	70	50	560	560	YORK PC120	208V/3ø	41.2	50	11.0	①⑨⑩
AHU-3	RETAIL AREA,MANAGER, BREAKROOM RESTROOM,	4000	1400	0.5	2									468	620	YORK NC120	208V/3ø	14.2	15		①②④⑤⑥⑨⑪
CU-3						124	93	80	67	55.0	109.2	70	50	560	560	YORK PC120	208V/3ø	41.2	50	11.0	①⑨⑩
AHU-4	MEZZANINE & RECEIVING	2000	400	0.5	3/4									195	250	YORK AHX60	208V/1ø	14.2	15		①②④⑤⑥⑨⑪
CU-4						55	40.5	80	67	55.0	57	70	50	280	280	YORK YHJD60	208V/3ø	22.9	40	12.0	①⑨⑩
AHU-5	PHARMACY	2000	300	0.5	3/4									195	250	YORK AHX60	208V/1ø	14.2	15		①②④⑤⑥⑨⑪
CU-5						55	40.5	80	67	55.0	57	70	50	280	280	YORK YHJD60	208V/3ø	22.9	40	12.0	①⑨⑩

① ALL AC UNITS SHALL BE 208V – 3 PHASE ② BURGLAR BARS RE: 3/M-1.2 ③ FACTORY FABRICATED ROOF CURB PER CODE ④ ECONOMIZER W/DIFFERENTIAL ENTHALPY CONTROLLER ⑤ BAROMETRIC RELIEF DAMPER
⑥ ELECTRONIC OR HOT PLATE IGNITION ⑦ NOT USED ⑧ DISPOSABLE 30/30 AIR FILTERS ⑨ FACTORY INSTALLED PACKAGE WITH UNIT DISCONNECT AND DUAL 115 VOLT GFCI TYPE SERVICE
⑩ SCHEDULED COOLING CAPACITIES LISTED ARE AT AMBIENT TEMPERATURE OF 98°F DB. ⑪ PROVIDE PHOTO-ELECTRIC SMOKE DETECTOR IN SUPPLY AIR DUCT
⑫ CONDENSER COIL AND EVAPORATOR COIL TO BE COATED W/ TECHNICOAT 10-1 ⑬ CONDENSER COIL TO BE COATED W/ TECHNICOAT 10-1

DIFFUSER SCHEDULE

TAG	SERVICE	CFM	NECK SIZE	FRAME TYPE	PATTERN	DAMPER	MATERIAL	FINISH	MANUFACTURER & MODEL No.
A	SUPPLY	AS NOTED	AS NOTED	NOTE 1,4,7	4-WAY	YES	STEEL	OFF-WHITE	METALAIRE 5500 SERIES
B	SUPPLY	AS NOTED	AS NOTED	NOTE 2,5,7	4-WAY	YES	STEEL	OFF-WHITE	METALAIRE 5500 SERIES
C	SUPPLY	AS NOTED	AS NOTED	NOTE 2,4,7	3-WAY	YES	STEEL	OFF-WHITE	METALAIRE 5500 SERIES
D	RETURN	AS NOTED	AS NOTED	NOTE 2,5,7	N/A	YES	STEEL	OFF-WHITE	METALAIRE CC1 CUBE CORE RET./EXHAUST
E	SUPPLY	AS NOTED	AS NOTED	NOTE 1,4,7	3-WAY	YES	STEEL	OFF-WHITE	METALAIRE 5500 SERIES
F	SUPPLY	AS NOTED	AS NOTED	NOTE 1,7	---	YES	STEEL	OFF-WHITE	METALAIRE 6000 SERIES LINEAR
G	RETURN	AS NOTED	AS NOTED	NOTE 1,4,7	NA	YES	STEEL	OFF-WHITE	METALAIRE CC1 CUBE CORE RET./EXHAUST
H	SUPPLY	AS NOTED	AS NOTED	NOTE 3	2-WAY	YES	STEEL	OFF-WHITE	METALAIRE 4000 SERIES
I	RETURN	AS NOTED	AS NOTED	NOTE 5	NA	NO	STEEL	OFF-WHITE	METALAIRE CC1 CUBE CORE RET./EXHAUST
J	RETURN	AS NOTED	AS NOTED	NOTE 2,6,7	NA	NO	STEEL	OFF-WHITE	METALAIRE CC1 CUBE CORE RET./EXHAUST
K	RETURN	AS NOTED	AS NOTED	NOTE 3	NA	YES	STEEL	OFF-WHITE	METALAIRE RH SERIES

NOTES:

1. PROVIDE FRAME SUITABLE FOR LAY-IN CEILING MOUNTING
2. PROVIDE FRAME SUITABLE FOR SURFACE MOUNTING
3. DUCT MOUNTED SIDEWALL DIFFUSER.
4. 24x24
5. 12x12
6. 24x48
7. FURNISH WITH SEISMIC TAPS.

PROVIDE SQUARE TO ROUND TRANSITION WHERE REQUIRED.

OUTDOOR AIR VENTILATION SUMMARY

UNIT NO.(S)	SERVICE	MIN O.A. (A) AREA SQFT	CFM/SF)	TTL	MIN O.A. (B) PEOPLE (NO.)	(CFM/PERSON	TTL	MAX (A & B)	REQ'D V.A. (CFM) MAX OF (A & B) CFM
AHU-1	RETAIL SALES -EAST	3,960	0.20 CFM/SF	792	64	15 CFM/PER	960	960	960
AHU-2	ENTRANCE AREA	695	0.15 CFM/SF	104.25	12	15 CFM/PER	180	180	1140
	RETAIL SALES -EAST	2,245	0.15 CFM/SF	336.75	64	15 CFM/PER	960	960	
	TOTAL	2,940		441	76		1140	1140	
AHU-3	MANAGER OFFICE	105	0.15 CFM/SF	15.75	1	15 CFM/PER	15	15.75	1357
	OFFICE	305	0.15 CFM/SF	45.75	1	15 CFM/PER	15	45.75	
	RETAIL SALES -WEST	2,240	0.20 CFM/SF	448	68	15 CFM/PER	1020	1020	
	BREAK ROOM	160	0.15 CFM/SF	24	2	15 CFM/PER	30	30	
	HALLWAY	300	0.15 CFM/SF	45	--	------	---	45	
	RESTROOM - 1	65	-----	--	1	100 CFM/WC	100	100	
	RESTROOM - 2	65	-----	--	1	100 CFM/WC	100	100	
	TOTAL	3,240		578.5	74		1280	1356.5	
AHU-4	RECEIVING	980	0.15 CFM/SF	147	4	-----	--	147	357
	MEZZANINE	1,400	0.15 CFM/SF	210	10	-----	--	210	
	TOTAL	2,380		357	14		--	357	
AHU-5	PHARMACY	1,300	0.15 CFM/SF	195	9	15 CFM/PER	135	195	195

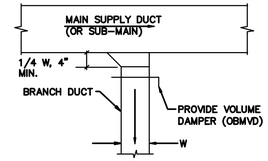

SUPPLY AIR DUCT

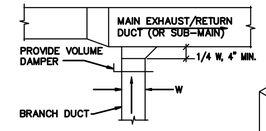

EXHAUST/RETURN AIR DUCT

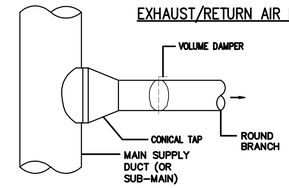

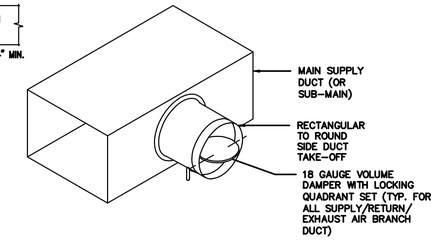

1 M-1.3 BRANCH TAKE-OFF DETAIL
NOT TO SCALE

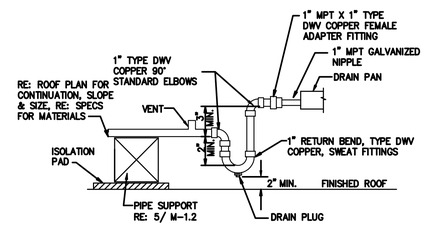

2 M-1.3 CONDENSATE PIPING CONNECTION DETAIL
SCALE: NOT TO SCALE

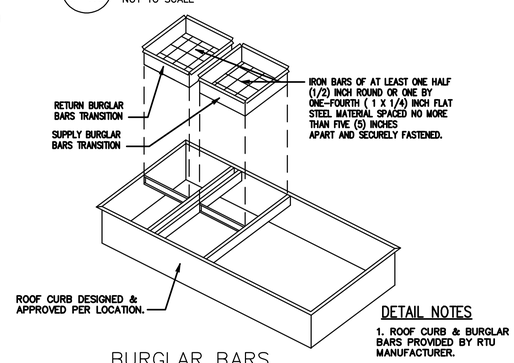

DETAIL NOTES

1. ROOF CURB & BURGLAR BARS PROVIDED BY RTU MANUFACTURER.

3 M-1.3 BURGLAR BARS TRANSITION TO RTU DETAIL
NOT TO SCALE

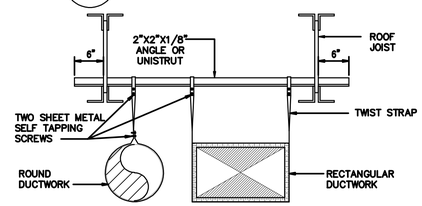

DUCT SUPPORT PARALLEL TO TRUSSES

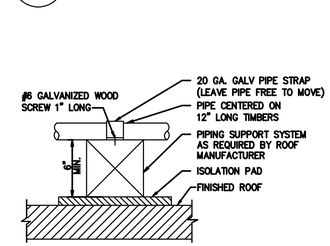

DETAIL NOTE:
PIPE SUPPORTS TO BE SPACED MAXIMUM 8'-0" O.C.
SUPPORT PIPE PARALLEL TO ROOF SLOPE.

5 M-1.3 PIPE SUPPORT DETAIL
SCALE: NOT TO SCALE

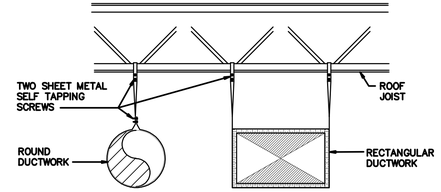

DUCT SUPPORT PERPENDICULAR TO TRUSSES

NOTES:
1. ALL DUCT & SUPPORTS PER UMC.

4 M-1.3 DUCT HANGER DETAIL
NOT TO SCALE

18662 MacArthur Blvd. Ste.200
Irvine, California 92612
(949) 798-3838
www.rka.com

ROBERT KABIAN Architects And Associates, Inc.

REGISTERED PROFESSIONAL ENGINEER MAURICE E. YEE No. 30465 Exp.12-31-11 MECHANICAL STATE OF CALIFORNIA

date:	
01/06/11	CHATTEL ARCH. SUBMITTAL
01/10/11	PLAN CHECK CORRECTIONS
01/27/11	CHATTEL ARCH. SUBMITTAL

DEVELOPER:
CHARLES COMPANY
9034 W. SUNSET BLVD.
WEST HOLLYWOOD
CA 90069
TEL (310) 247-0900
FAX (310) 247-1525

CVS pharmacy
STORE #49557
900 S. ATLANTIC BLVD
LOS ANGELES, CA

design RKA
drawn RKA
check RKA

sheet M-1.3 of
job 00151

RPM Engineers, Inc.
102 DISCOVERY
Irvine, Ca. 92618
Tel: 949-450-1229
Fax: 949-450-1454
Contact: Maurice E. Yee ext. 208

RPM# 10-282 01/27/11

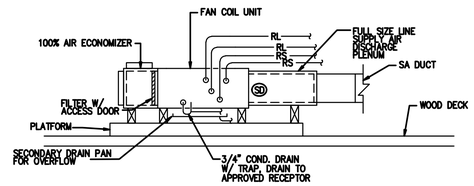

1 / M-1.4 AIR HANDLING UNIT
NOT TO SCALE

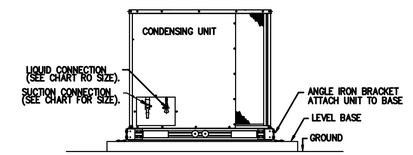

2 / M-1.4 CONDENSING UNIT
NOT TO SCALE

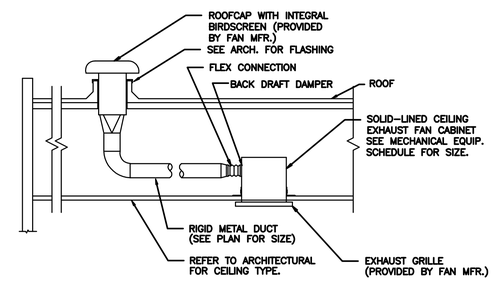

4 / M-1.4 EXHAUST FAN ROOF CAP DETAIL
NOT TO SCALE

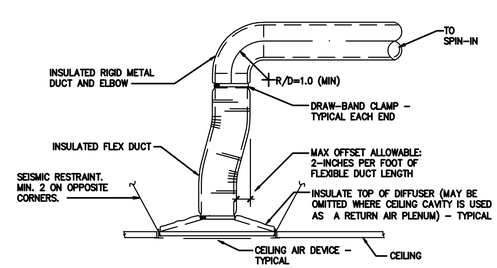

LONG RUN, SIDE TAP INSTALLATION

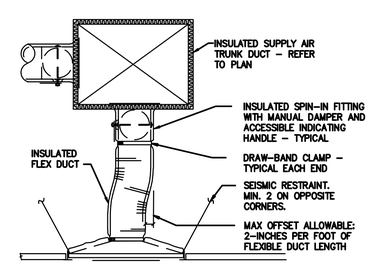

BOTTOM TAP INSTALLATION

DETAIL NOTES

1. TWO INSTALLATION OPTIONS ARE SHOWN. PROVIDE THE MOST SUITABLE OPTION BASED UPON ACTUAL DUCT LAYOUT, DIFFUSER LOCATION, AND FIELD CONDITIONS. WHERE FLEXIBLE DUCT RUN EXCEEDS THE MAXIMUM ALLOWABLE LENGTH, PROVIDE THE LONG RUN, SIDE TAP INSTALLATION.
2. FLEXIBLE DUCT: U.L. LISTED CLASS 1 AIR DUCT, TESTED IN ACCORDANCE WITH U.L. 181. MAXIMUM LENGTH ALLOWED IS 5 FEET.
3. SPIN-IN FITTING: FLARED TYPE WITH BUTTERFLY DAMPER AND INDICATING HANDLE. PROVIDE STRAIGHT-IN TYPE SPIN-IN FITTING ONLY WHERE TRUNK DUCT SIZE WILL NOT ALLOW THE INSTALLATION OF A FLARED TYPE FITTING. INSTALL DUCT INSULATION SO THAT DAMPER HANDLE IS ACCESSIBLE AND VISIBLE ON THE BOTTOM OR SIDE OF THE SPIN-IN FITTING.
4. PROVIDE ACCESS TO DAMPERS LOCATED IN CEILINGS OTHER THAN LAY-IN TYPE CEILINGS.
5. PROVIDE MINIMUM LENGTH OF FLEXIBLE DUCT WITH NO EXCESS LENGTH BETWEEN CONNECTION POINTS. INSTALL FULLY EXTENDED, NOT COMPRESSED.
6. EXTEND FLEXIBLE DUCT A MINIMUM LENGTH OF ONE DUCT DIAMETER STRAIGHT FROM CONNECTION POINTS BEFORE BENDING. MAKE SMOOTH BENDS WITHOUT DEFORMING DUCT CROSS-SECTION.
7. PROVIDE ROUND-TO-RECTANGULAR INSULATED SHEET METAL TRANSITION AT THE NECK OF THE CEILING AIR DEVICE AS NECESSSARY FOR RECTANGULAR NECK DIFFUSERS/GRILLES.
8. SUPPORT FLEXIBLE DUCT AS RECOMMENDED BY MANUFACTURER USING A MINIMUM OF 1-1/2 INCH WIDE BAND CLAMP. MAXIMUM HANGER SPACING IS 4 FEET WITH A MAXIMUM PERMISSIBLE SAG OF 1/2-INCH PER FOOT BETWEEN SUPPORTS. HANGERS MUST MAINTAIN ROUND DUCT SHAPE.

5 / M-1.4 CEILING DIFFUSER/RETURN GRILLE CONNECTION DETAIL
NOT TO SCALE

RPM Engineers, Inc.
102 DISCOVERY
Irvine, Ca. 92618
Tel: 949-450-1229
Fax: 949-450-1464
Contact: Maurice E. Yee ext. 208

sheet M-1.4 of
job 09161

RPM# 10-282 01/27/11

ROBERT KARIAN Architects And Associates, Inc.
18662 MacArthur Blvd. Ste.200
Irvine, California 92612
(949) 798-3838
www.rkaa.com

REGISTERED PROFESSIONAL ENGINEER
MAURICE E. YEE
No. 30465
Exp.12-31-11
MECHANICAL
STATE OF CALIFORNIA

date:

01/05/11	CHATTEL ARCH. SUBMITTAL	
01/10/11	PLAN CHECK CORRECTIONS	
01/27/11	CHATTEL ARCH. SUBMITTAL	

DEVELOPER:
CHARLES COMPANY
9034 W. SUNSET BLVD.
WEST HOLLYWOOD
CA 90069
TEL (310) 247-0900
FAX (310) 247-1525

CVS pharmacy
STORE #49557
909 S. ATLANTIC BLVD
LOS ANGELES, CA

design RKA
drawn RKA
check RKA

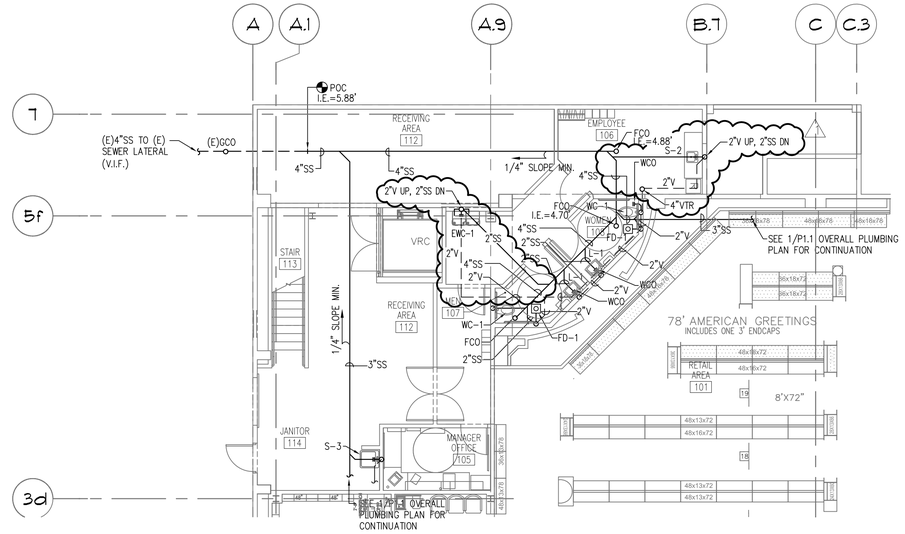

2 P-1.1 SANITARY FLOOR PLAN

SCALE: 1/8" = 1'-0"

READ THE FOLLOWING NOTE AND DELETE AFTER READING.

The following are some general design notes that should be followed when not using the prototype design.

1. Slope all drain lines toward restroom area when possible.
2. Do not use double Y fittings under slab for sewer system.
3. When possible, use three (3) sanitary sewer connection and route sewer piping around building (Pharmacy sink, Restrooms and mop sink, Photo Lab).

NOTES BY SYMBOL:

1. 3/4"CONDENSATE PIPING CONNECTION DETAIL 1/M-1.4
2. 1"CD DOWN IN WALL. CD SHALL ROUTE DN IN WALL, ELL THRU WALL AND TERMINATE AT LAVATORY TAILPIECE CONNECTION.
3. 1"CD UP THRU MEZZ. FLOOR & DN IN WALL TO SPLICE INTO JANITORS SERVICE SINK. TERMINATE DRAIN AT MIN. 1" ABOVE FLOOD LEVEL RIM OF SINK.
4. 1"CW STUB BELOW FLOOR FOR FUTURE SINKS.
5. 3"VENT THRU ROOF MAINTAIN 10'-0"MIN. DISTANCE AWAY FROM MECHANICAL UNIT FRESH AIR INTAKE.
6. 2"SS DN, 2"V UP & 3/4"CW DN TO SINK.
7. 1"CD DN IN WALL BELOW TO SERVICE SINK
8. 3/4"CD DN THRU MEZZANINE FLOOR.
9. 1"CW W/ SOV & 1"HW DN TO WH-1.
10. FLOOR SINK BELOW WH-1. SEE P1.2 WASTE & VENT ISOMETRIC FOR DETAIL.

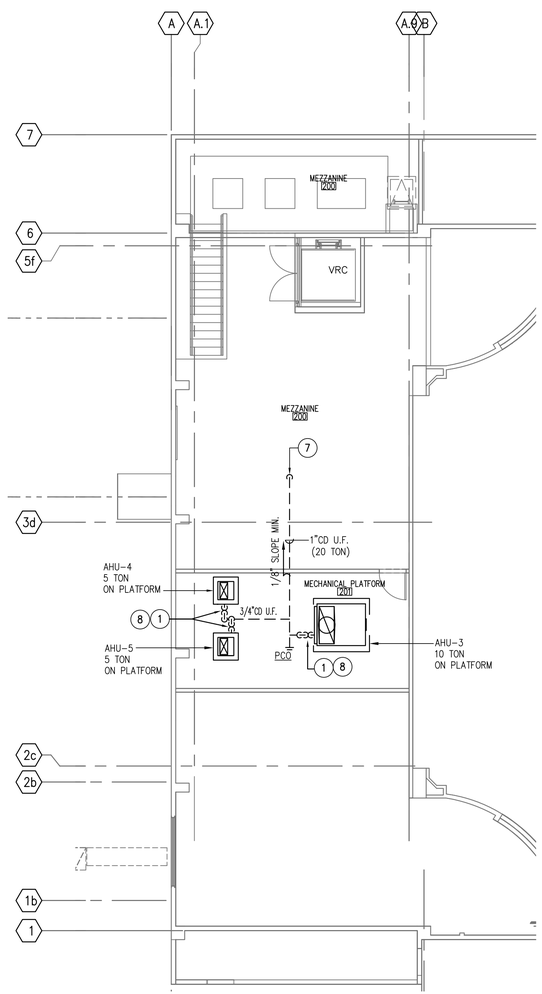

2 P-1.1 PLUMBING PLAN – MEZZ. FLR.

SCALE: 1/8" = 1'-0"

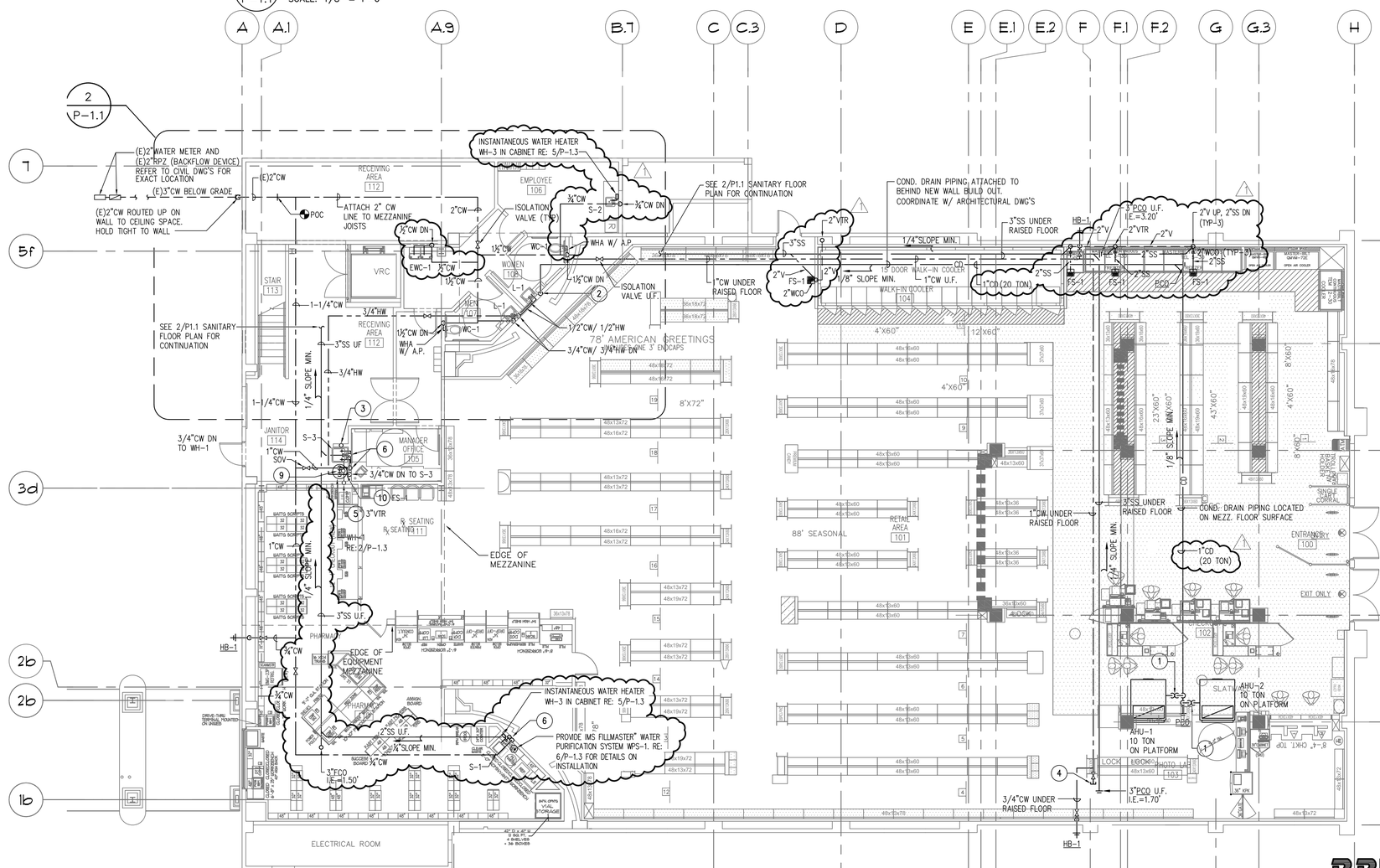

1 P-1.1 PLUMBING PLAN – 1ST FLR.

SCALE: 1/8" = 1'-0"

ROBERT KABICEK Architects And Associates, Inc.
18662 MacArthur Blvd. Ste.200
Irvine, California 92612
(949) 798-3838
www.rkaa.com

REGISTERED PROFESSIONAL ENGINEER MAURICE E. YEE No. 30465 Exp.12-31-11 MECHANICAL STATE OF CALIFORNIA

date:

COPYRIGHT ALL RIGHTS RESERVED. ROBERT KABICEK ARCHITECTS, INC. THIS DRAWING IS AN INSTRUMENT OF SERVICE, IT IS THE PROPERTY OF ROBERT KABICEK ARCHITECTS, AND ASSOC. INC. AND MAY NOT BE REPRODUCED, OR REPRODUCTION HERE OF USED, WITHOUT WRITTEN PERMISSION OF THE ARCHITECT.

01/06/11	CHATTEL ARCH. SUBMITTAL
01/10/11	PLAN CHECK CORRECTIONS
01/27/11	CHATTEL ARCH. SUBMITTAL

NOTICE OF ALTERNATE BILLING OR PAYMENT CYCLE: REQUIRED TRADE WORK MUST BE COMPLETED IN ACCORDANCE WITH ORIGINAL PLANS AND ESTIMATES IN BILLING CYCLES STATED FOR THAT TRADE TO RECEIVE PAYMENT IN FULL. THE OWNER IS NOT TO MAKE PAYMENT ON SOME ALTERNATIVE SCHEDULE UNLESS REQUIRED WORK IS COMPLETED IN ACCORDANCE AND ESTIMATED IN A WRITTEN DESCRIPTION OF SUCH OTHER BILLING AND/OR CYCLE APPLICABLE TO THE PROJECT IS AVAILABLE FROM THE OWNER AT THE OFFICES OF

OR HIS DESIGNATED AGENT SHALL PROVIDE THIS WRITTEN DESCRIPTION ON REQUEST.

DEVELOPER:
CHARLES COMPANY
9034 W. SUNSET BLVD.
WEST HOLLYWOOD
CA 90069
TEL (310) 247-0900
FAX (310) 247-1525

CVS pharmacy
STORE #49557
909 S. ATLANTIC BLVD
LOS ANGELES, CA

design	RKA	drawn	RKA
check	RKA		

RPM Engineers, Inc.
102 DISCOVERY
Irvine, Ca. 92618
Tel: 949-450-1229
Fax: 949-450-1454
Contact: Maurice E. Yee ext. 208

sheet P-1.1 of 3

job 09151

RPM# 10-282 01/27/11

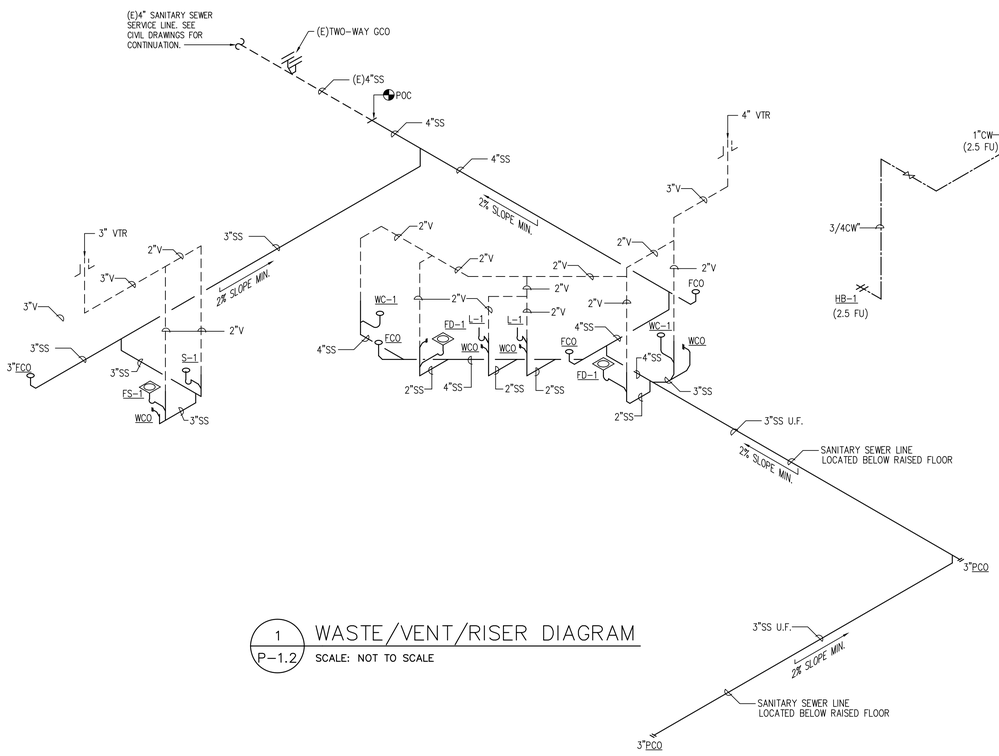

1 P-1.2 WASTE/VENT/RISER DIAGRAM

SCALE: NOT TO SCALE

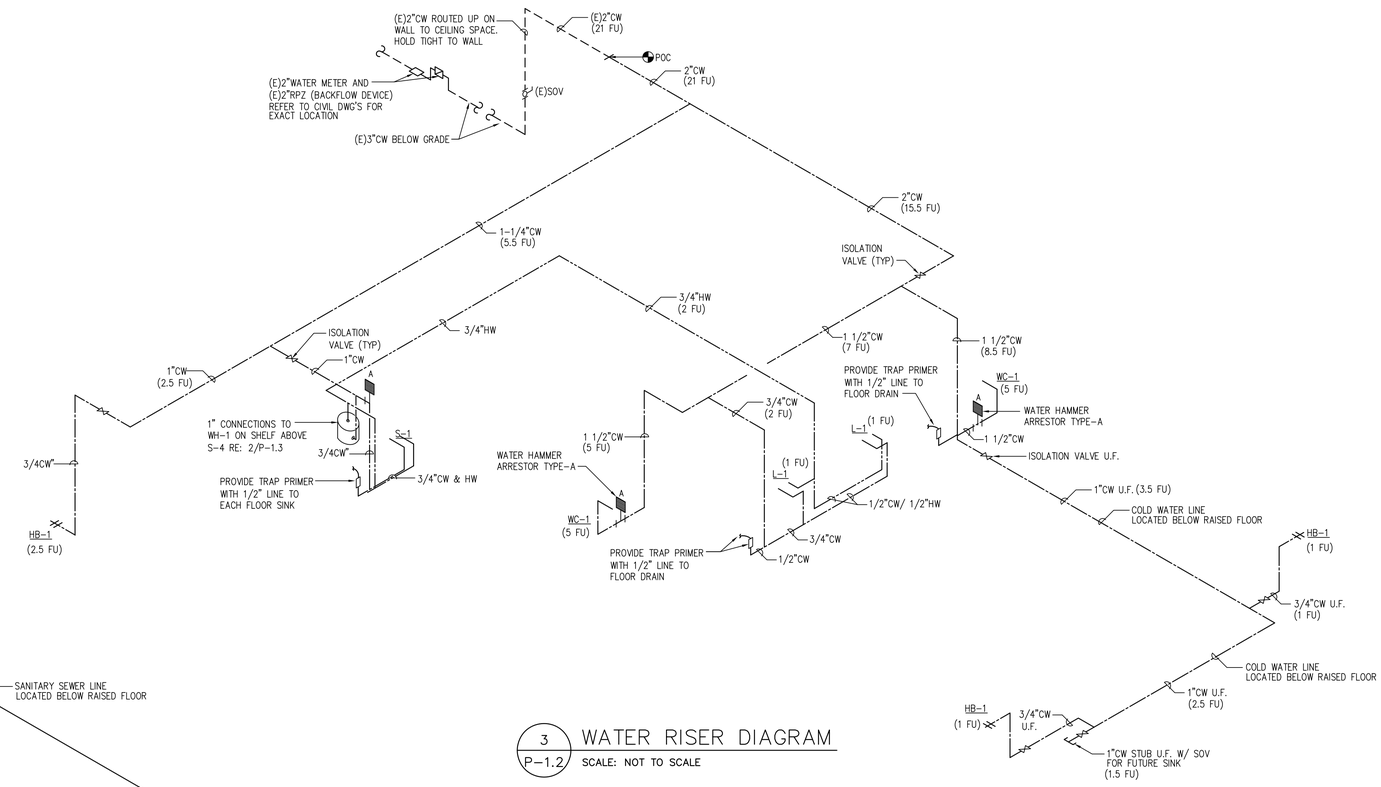

3 P-1.2 WATER RISER DIAGRAM

SCALE: NOT TO SCALE

18662 MacArthur Blvd.
Ste.200
Irvine, California 92612
(949) 796-3838
www.rkaa.com

ROBERT KABICEK Architects And Associates, Inc.

REGISTERED PROFESSIONAL ENGINEER MAURICE E. YEE No. 30465 Exp.12-31-11 MECHANICAL STATE OF CALIFORNIA

date:

COPYRIGHT ALL RIGHTS RESERVED. ROBERT KABICEK ARCHITECTS AND ASSOCIATES, INC. THIS DRAWING IS AN INSTRUMENT OF SERVICE, IT IS THE PROPERTY OF ROBERT KABICEK ARCHITECTS, AND MUST BE RETURNED UPON REQUEST. REPRODUCTION OR USE, WITHOUT WRITTEN PERMISSION OF THE ARCHITECT.

01/06/11	CHATTEL ARCH. SUBMITTAL
01/10/11	PLAN CHECK CORRECTIONS
01/27/11	CHATTEL ARCH. SUBMITTAL

NOTICE OF ALTERNATE BILLING OR PAYMENT CYCLE: THE CONTRACTOR MAY ELECTE TO ALTERNATE BILLING THE SUBMISSION OF BILLINGS OR ESTIMATES IN BILLING CYCLES OTHER THAN THIRTY DAYS. IN THE EVENT THE OWNER ELECTS TO ALTERNATE MAKE PAYMENT ON SUCH ALTERNATIVE SCHEDULE AFTER CERTIFICATION AND APPROVAL OF BILLING BY THE OWNER OR HIS DESIGNATED AGENT. ANY OTHER OTHER BILLING AND/OR CYCLE APPLICABLE TO THE PROJECT IS AVAILABLE FROM THE OWNER AT THE OFFICES OF

OR HIS DESIGNATED AGENT SHALL PROVIDE THIS WRITTEN DESCRIPTION ON REQUEST

DEVELOPER:
CHARLES COMPANY
9034 W. SUNSET BLVD.
WEST HOLLYWOOD
CA 90069
TEL (310) 247-0900
FAX (310) 247-1525

CVS pharmacy
STORE #49557
909 S. ATLANTIC BLVD
LOS ANGELES, CA

design RKA
drawn RKA
check RKA

sheet P-1.2 of 3
job 09151

RPM Engineers, Inc.
102 DISCOVERY
Irvine, Ca. 92618
Tel: 949-450-1229
Fax: 949-450-1454
Contact: Maurice E. Yee ext. 208

RPM# 10-282 01/27/11

PLUMBING NOTES

1. GENERAL NOTES ARE APPLICABLE TO ALL PLUMBING WORKING DRAWINGS.
2. THE WORK SHALL BE EXECUTED IN STRICT CONFORMITY WITH BASE BUILDING SPECIFICATION AND WITH THE LATEST EDITION OF THE PREVAILING LOCAL PLUMBING AND BUILDING CODES AND ALL LOCAL REGULATIONS THAT MAY APPLY. IN CASE OF CONFLICT BETWEEN THE CONTRACT DOCUMENTS AND A GOVERNING CODE OR ORDINANCE THE MORE STRINGENT STANDARD SHALL APPLY.
3. ALL PLUMBING WORK SHALL BE COORDINATED WITH ALL OTHER TRADES BEFORE PROCEEDING WITH INSTALLATION.
4. NO CHANGES ARE TO BE MADE IN PLUMBING LAYOUT WITHOUT WRITTEN PERMISSION BY THE ARCHITECT.
5. NO PIPING SHALL RUN EXPOSED IN SALES OR FINISHED AREAS.
6. PLUMBING CONTRACTOR SHALL BE RESPONSIBLE FOR OBTAINING ALL NECESSARY PERMITS AND FOR PAYING RELATED FEES.
7. ROUGH-IN DIMENSIONS OF TOILET FIXTURES MUST BE COORDINATED WITH GENERAL CONTRACTOR AND FIELD SUPERVISOR.
8. INSTALL BALL VALVES ON ALL BRANCH SUPPLY LINES.
9. PROVIDE ACCESS PANELS ON ALL INACCESSIBLE VALVES AND CLEANOUTS. ACCESS PANELS SHALL BE PROVIDED BY GENERAL CONTRACTOR. PLUMBING CONTRACTOR SHALL BE RESPONSIBLE FOR THEIR LOCATION. MOUNT SHUT-OFF VALVES NO HIGHER THAN 12'-0" AFF.
10. ALL WORK SHALL BE PROPERLY TESTED, BALANCED AND CLEANED. PROVIDE A ONE YEAR WARRANTY FROM DATE OF FINAL INSPECTION ON ALL PARTS AND LABOR.
11. FOLLOW PDI STANDARDS FOR WATER HAMMER ARRESTORS.
12. ALL FIXTURES TO BE SUPPLIED & INSTALLED BY PLUMBING CONTRACTOR, EXCEPT THE PHARMACY SINK AND/OR PHOTO-LAB SINK: CVS SUPPLIES & PLUMBING CONTRACTOR INSTALLS.
13. GENERAL CONTRACTOR SHALL COORDINATE WATER METER LOCATION AND INSTALLATION WITH LOCAL AUTHORITIES AND CIVIL DRAWINGS.
14. PROVIDE BUILDING SERVICE LINE 5'-0" FROM BUILDING LINE, OR INSIDE BUILDING FROM OUTLET SIDE OF METER AS SHOWN ON CIVIL SITE PLAN. COORDINATE EXACT LOCATION WITH CIVIL DRAWINGS AND AT JOB SITE. PROVIDE BACKFLOW PREVENTER AS REQUIRED BY LOCAL AUTHORITIES.
15. SANITARY SEWER PIPING SHOWN IS BASED ON 0.25" PER FOOT FALL FOR ALL PIPING. COORDINATE BUILDING SEWER LOCATION AND INVERT ELEVATION WITH CIVIL DRAWINGS.
16. TRAP SEAL PRIMERS ARE TO BE PROVIDED AT NO ADDITIONAL COST TO OWNER IF REQUIRED BY LOCAL BUILDING CODE OFFICIALS.
17. VTR'S SHALL BE LOCATED A MINIMUM OF 5' FROM ANY PARAPET WALL AND 10' FROM ANY RTU AIR INTAKE.
18. ALL REQUIRED CLEANOUTS SHALL BE INSTALLED AS PER SECTION 707.0 & 719.0 OF THE PLUMBING CODE.
19. EACH PLUMBING VENT SHALL TERMINATE NOT LESS THAN TEN (10) FEET FROM OR AT LEAST THREE (3) FEET ABOVE ANY WINDOW, DOOR, OPENING, AIR INTAKE, OR VENT SHAFT.
20. NEW OR REPAIRED POTABLE WATER SYSTEM SHALL BE DISINFECTED PRIOR TO USE ACCORDING TO THE METHOD SET IN SECTION 609.9 OF THE PLUMBING CODE.
21. ACCESSIBLE WATER HAMMER ARRESTERS SHALL BE INSTALLED FOR QUICK-ACTING VALVES. LOCATION AND METHOD OF INSTALLATION SHALL COMPLY WITH THE MANUFACTURER'S RECOMMENDATION.

PLUMBING FIXTURE SCHEDULE

ITEM	DESCRIPTION	MANUFACTURER	W	V	CW	HW	W&V FU	CW&HW GPM	REMARKS AND SPECIFICATIONS
FCO	FLOOR CLEANOUT	J. R. SMITH	–	–	–	–	– –	– –	FLOOR CLEANOUT: #4890" ROUND DECK PLUG WITH THREADED SPANNER WRENCH COVER SET AND ADJUSTED TO FINISH FLOOR LEVEL.
FD-1	FLOOR DRAIN	J. R. SMITH	3"	2"	–	–	– –	– –	FLOOR DRAIN: #2005Y-A, DUCO CAST IRON BODY WITH FLASHING COLLAR, ADJUSTABLE STRAINER AND ROUND TOP.
FS-1	FLOOR SINK	WATTS DRAINAGE	3"	2"	–	–	(5)x2=10	– –	FLOOR SINK: #FS-720-3NH7G-1, 8"ROUND X 6"DEEP, WHITE PORCELAIN ENAMEL COATED INTERIOR, LOOSE SET PORCELAIN ENAMEL CAST IRON GRATE, ALUMINUM DOME BOTTOM STRAINER, 3" PIPE SIZE, NO HUB TRAP PRIMER TAPPING AND 4"X9" OVAL NICKEL BRONZE FUNNEL.
HB-1	HOSE BIBB	J. R. SMITH	–	–	1/2"	–	– –	(1) 2.5	HOSE BIBB: #5509QT, BRONZE NICKEL PLATED QUARTER-TURN NON-FREEZE HYDRANT WITH HOSE CONNECTION, INTEGRAL VACUUM BREAKER, "T" HANDLE KEY, AND STAINLESS STEEL BOX WITH FULL 180 DEGREE COVER OPENING.
	ADDITIONAL HOSE BIBB	J. R. SMITH	–	–	1/2"	–	– –	(2)X1=2	
L-1	LAVATORY	ZURN	2"	1-1/4"	1/2"	1/2"	(2)x1=2	(2)x1=2	LAVATORY: Z5354: VITREOUS CHINA WALL-HUNG LAVATORY, PROVIDED WITH WALL HANGER, FAUCET HOLES ON 4" CENTERS, FRONT OVERFLOW; PROVIDE WITH FOLLOWING TRIM Z8743-PC GRID STRAINER, Z8700 P-TRAP AND Z8946-1-NT TRAP & SUPPLY WRAP: FAUCET: DELTA 520-WFMPU WITH RP19754 AERATOR; LESS POP-UP DRAIN AND LIFT HOLE IN POLISHED CHROME. 1-1/4" TAILPIECE. PROVIDE 3/8" WALL SUPPLIES WITH STOP.
S-1	PHARMACY SINK	SINK & FAUCET FURNISHED BY MILLWORK SUPPLIER, INSTALLED BY PLUMBER	2"	1-1/2"	1/2"	1/2"	(1) 2	(1) 1.5	PHARMACY SINK & FAUCETS: KINDRED 16"x18"x10" STAINLESS STEEL SINK; FAUCET; 1-1/2" CAST BRASS "P" TRAP; PROVIDE 3/8" ANGLE SUPPLIES WITH STOP. PLUMBER SHALL PROVIDE ALL NECESSARY APPURTENANCES TO HAVE A FULLY OPERATIONAL SYSTEM.
S-2	BREAKROOM SINK	DAYTON	2"	1-1/2"	1/2"	1/2"	(1) 2	(1) 1.5	BREAKROOM SINK: MODEL # DP211515C, STAINLESS STEEL SINK, 15"x15", 5-1/8" DEEP, 14-3/8"x14-3/8" CUTOUT WITH 1-1/2" RAD. CORNERS, 1-1/4" DIA. FAUCET HOLES. FAUCET: ELKAY-#LKA-2479-8BH-GOOSE NECK BAR FAUCET WITH WITH LEVER HANDLES AND AERATOR, OVERALL HEIGHT 8". FURNISH AND INSTALL TRAP & SUPPLY WRAP PER CODE.
S-3	MOP BASIN	MUSTEE	3"	2"	1/2"	1/2"	(1) 3	(1) 3	MODEL #63M DURASTONE MOP BASIN. 24"x24"x10", ONE PIECE MOLDED CONSTRUCTION, CENTER DRAIN. FAUCET: PN. 63.600A – CHROME PLATED BRASS SERVICE SINK FAUCET – 1/2" PIPE ECCENTRIC INLETS, 8" CENTERS, VACUUM BREAKER INTEGRAL STOPS, CHROME PLATED (H&C) HANDLES – 3/4" HOSE END SPOUT WITH PAIL HOOK TOP REINFORCING BAR AND MOUNTING BRACKET. HOSE & HOSE BRACKET: PN. 65.700 MUSTEE TEL: (216) 267-3100
EWC-1	WATER COOLER	HALSEY TAYLOR	1-1/2"	1-1/4"	1/2"	–	(2) .5	(2) .5	ELECTRIC WATER COOLER: #HAC8FSBLR-Q ADA WALL-HUNG, BARRIER-FREE WITH FRONT PUSH BARS, TWO STREAM MOUNT BUILDING PROJECTOR AND AUTOMATIC STREAM REGULATION. MOUNT HANDICAP (REFRIGERATED) UNIT ON RIGHT WALL BRACKET. 36" RECOMMENDED HEIGHT FROM FLOOR TO CENTER OF BUBBLER (CHECK LOCAL CODES). PROVIDE 3/8" ANGLE SUPPLY WITH STOP AND 1-1/2" CAST BRASS "P" TRAP. NEWTON DISTRIBUTING CO. TEL: (877) 837-7745
WH-1	WATER HEATER	A.O. SMITH	–	–	3/4"	1"	– –	– –	WATER HEATER: MODEL #ECJ-30, 22"ø X 30"H, 29 GALLON GLASS LINED TANK, ONE-4500 WATT, 208 VOLT, SINGLE PHASE ELEMENT. INSTALL 16 GAUGE GALV. SHEET METAL PAN BELOW.
WH-2	INSTANTANEOUS WATER HEATER	CHRONOMITE LABORATORIES, INC.	–	–	1/2"	1/2"	– –	– –	INSTANTANEOUS WATER HEATER: MODEL #SR-30L, TANKLESS ELECTRIC WATER HEATER, FLOW ACTIVATED, STAINLESS STEEL HEATING COILS, ONE-3600 WATT, 110/120 VOLT, SINGLE PHASE, 30 AMP, 1/2" WATER CONNECTION, 6"HX9"WX2-1/2", 80-121 DEGREE F. TEMP. RANGE.
WH-3	INSTANTANEOUS WATER HEATER	CHRONOMITE LABORATORIES, INC.	–	–	1/2"	1/2"	– –	– –	INSTANTANEOUS WATER HEATER: MODEL #SR-30L, TANKLESS ELECTRIC WATER HEATER, FLOW ACTIVATED, STAINLESS STEEL HEATING COILS, ONE-3600 WATT, 208V VOLT, SINGLE PHASE, 30 AMP, 1/2" WATER CONNECTION, 6¼"(H) X 9⅝"(W) X 2¾", 80-121 DEGREE F. TEMP. RANGE.
WPS-1	WATER PURIFICATION SYSTEM	"FILLMASTER"	–	–	1/4"	–	– –	– –	WATER PURIFICATION SYSTEM: PROVIDE ALL NECESSARY PIPING, FITTINGS AND EQUIPMENT NEEDED TO ASSURE A FULLY OPERATIONAL SYSTEM.
PCO	LINE CLEANOUT	J. R. SMITH	–	–	–	–	– –	– –	PLUG CLEANOUT: #4472, CAULK FERRULE CLEANOUT WITH TAPER THREAD PLUG
WC-1	WATER CLOSET	TOTO	3"	3"	1"	–	(2)x4=8	(2)x5=10	WATER CLOSET: CT705ELN: 17-1/2" HIGH ELONGATED RIM VITREOUS CHINA FLOOR MOUNTED TOILET COMPLETE WITH OPEN FRONT TOILET SEAT: TOTO SC534 AND 1.28 GPF FLUSH VALVE: ZURN Z6200PEV.
WCO	WALL CLEANOUT	J. R. SMITH	–	–	–	–	– –	– –	WALL CLEANOUT: #4420 TAPER THREAD PLUG WITH ROUND COVER.
FIXTURE UNIT (FU) AND GALLONS PER MINUTE (GPM) TOTALS							23.5(FU)/38(GPM)		

ALL FIXTURES TO BE SUPPLIED & INSTALLED BY PLUMBING CONTRACTOR, EXCEPT THE PHARMACY SINK AND/OR PHOTO-LAB SINK: C.V.S. SUPPLIES & PLUMBING CONTRACTOR INSTALLS

LEGEND

—SS—	SANITARY SEWER
—SD—	STORM DRAIN
—RD—	ROOF DRAIN LINE
—ORD—	OVERFLOW ROOF DRAIN LINE
—·—·—	DOMESTIC COLD WATER
—··—··—	DOMESTIC HOT WATER
—CD—	CONDENSATE DRAIN
- - - - -	PLUMBING VENT
—G—	GAS PIPING
	UNION
	PLUG COCK
	ELBOW – TURNED DOWN
	ELBOW – TURNED UP
	TEE – TURNED DOWN
	TEE – TURNED UP
	GATE VALVE
	RPBP
	BALL VALVE
	CHECK VALVE
	SHUT-OFF VALVE IN VERTICAL LINE
	GAS PRESSURE REGULATOR
	T & P RELIEF VALVE
◎ RD	ROOF DRAIN
◎ OD	OVERFLOW ROOF DRAIN
—O FCO	FLOOR CLEANOUT
—O GCO	GROUND CLEANOUT
HB	HOSE BIBB
WCO	WALL CLEANOUT
PCO	PLUG CLEANOUT

ABBREVIATIONS

CD	CONDENSATE DRAIN	ODS	OVERFLOW DOWN SPOUT
CONT.	CONTINUATION	OR	OVERFLOW ROOF DRAIN
CW	COLD WATER	PF	PLUMBING FIXTURE
DN	DOWN	RD	ROOF DRAIN
DS	DOWN SPOUT	RPBP	REDUCED PRESSURE BACKFLOW PREVENTER
FD	FLOOR DRAIN	SD	STORM DRAIN
FCO	FLUSH CLEAN OUT	SS	SANITARY SEWER
FU	FIXTURE UNIT	U/F	UNDER FLOOR
G	GAS PIPING	V	PLUMBING VENT
GPM	GALLONS PER MINUTE	VTR	VENT THRU ROOF
HW	HOT WATER	W	WASTE
I.E.	INVERT ELEVATION	WCO	WALL CLEAN OUT

A. SYSTEM DATA:
1. MAXIMUM WATER SUPPLY PRESSURE = 90 PSI
2. MINIMUM WATER SUPPLY PRESSURE = 80 PSI
DEMAND = 23.5 FU (FLUSH VALVE) = 38 GPM

B. FIXED PRESSURE LOSSES:
1. 2" WATER METER = 1.5 PSI
2. 2" BACKFLOW PREVENTER = 13.5 PSI
3. 2" CW LOSS, 30' X 1.6 PSI/100' = 0.5 PSI
4. MINIMUM PRESSURE AVAILABLE @ PRV = 65 PSI
5. PRV SET FOR 75 PSI. PRV LOSS = 8 PSI
6. PRESSURE AVAILABLE @ PRV OUTLET = 57 PSI
7. STATIC PRESSURE: 10 FT. X 0.43 = 4.3 PSI

C. MINIMUM PRESSURE REQUIRED = 25 PSI

D. AVAILABLE PRESSURE FOR PIPING LOSSES = 27.7 PSI

E. MAXIMUM DEVELOPED PIPE LENGTH:
1. MEASURED LENGTH = 200 FT.
2. FITTINGS ALLOWANCE = X 1.25
TOTAL = 250 FT.

F. ALLOWABLE FRICTION LOSS PER 100 FT. OF PIPE:
1. 27.7 PSI / 250 FT. / 100' = 11.1 PSI

G. PIPE SIZING TABLE:
1. PIPING USED = TYPE "L" COPPER
2. MAXIMUM VELOCITY ALLOWED: CW = 8 FPS, HW = 5 FPS

PIPE SIZE (INCH)	FLOW RATE (GPM)	FIXTURE UNITS		HW FLOW RATE (GPM)	HW MAX FU
		FV	TANK		
1/2	3.5	---	3	3.5	3
3/4	10	---	13	7	8
1	20	---	30	13	18
1-1/4	30	13	54	19	28
1-1/2	43	33	99	29	52
2	76	132	254	47	115

WATER PRESSURE CALCULATIONS

FIXTURE UNIT COUNT

QUANTITY	FIXTURE	WATER FIXTURE UNITS	SEWER FIXTURE UNITS
2	WATER CLOSET (FLUSH VALVE)	5 EACH = 10	4 EACH = 8
2	LAVATORY	1 EACH = 2	1 EACH = 2
1	SINK (PHARMACY)	1 EACH = 1.5	1 EACH = 2
1	SINK (BREAKROOM)	1 EACH = 1.5	1 EACH = 2
1	MOP SINK	3 EACH = 3	3 EACH = 3
2	DRINKING FOUNTAIN (HI-LO UNIT)	0.5 EACH = 1	0.5 EACH = 1
5	FLOOR SINKS 2"	0	2 EACH = 10
1	HOSE BIB	2.5 EACH = 2.5	0
2	HOSE BIB (ADDITIONAL)	1 EACH = 2	0
	TOTAL FIXTURE UNITS –	27 (F.U.) 40 GPM	28 (F.U.)

FIXTURE UNITS

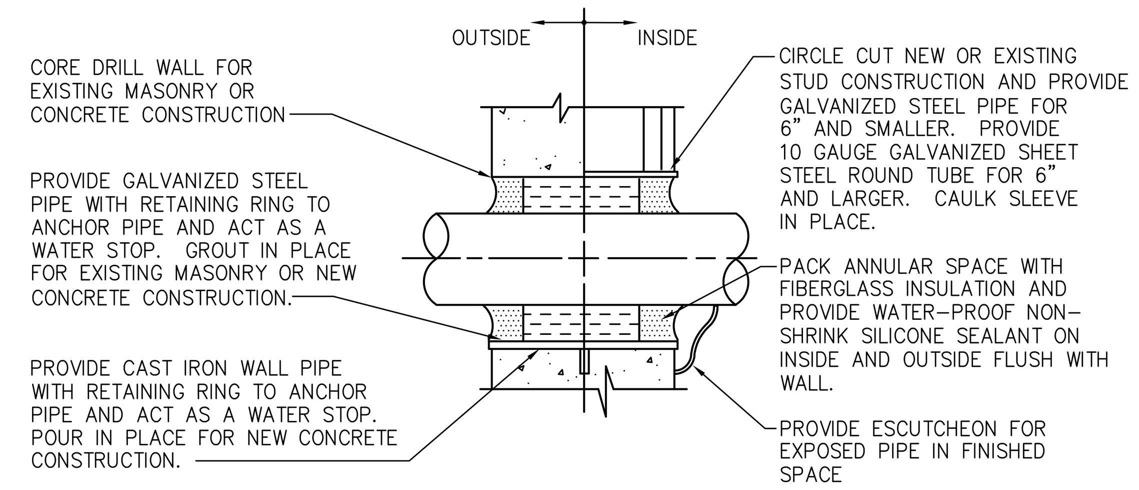

DETAIL NOTE:
PIPING ARRANGEMENT SHOWN IN SCHEMATIC. ADJUST TO SUIT FIELD CONDITIONS. REFER TO SPECIFICATIONS FOR MORE INFORMATION ON INSULATION AND SEALANT. COORDINATE SLEEVE INSTALLATION WITH GENERAL CONTRACTOR.

1 / P-1.3 WALL PENETRATION DETAIL
SCALE: NOT TO SCALE

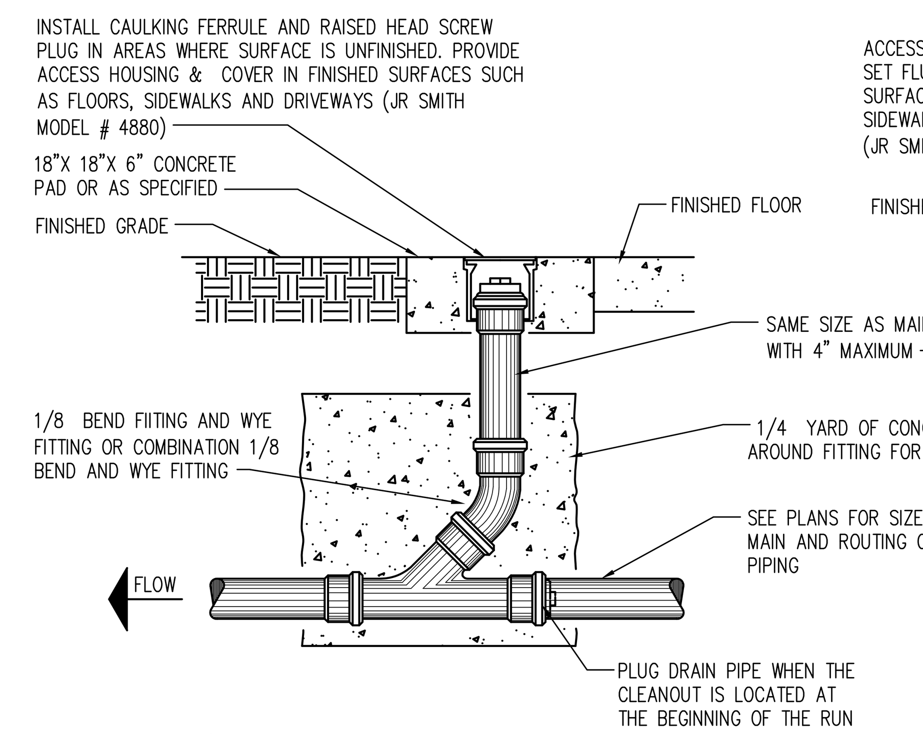

3 / P-1.3 CLEANOUT
SCALE: NOT TO SCALE

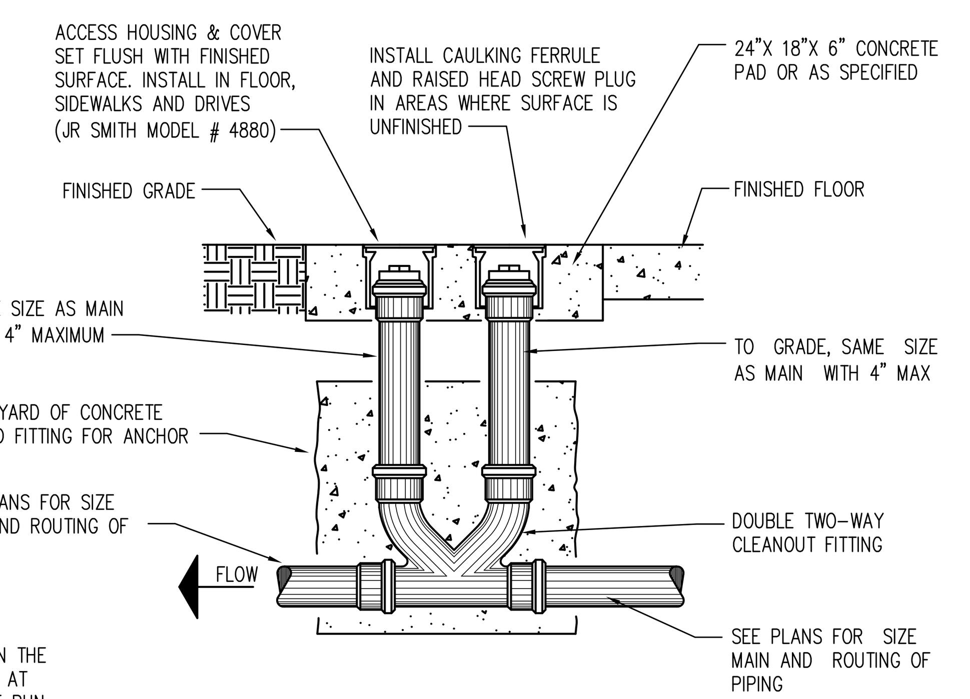

4 / P-1.3 TWO-WAY CLEANOUT
SCALE: NOT TO SCALE

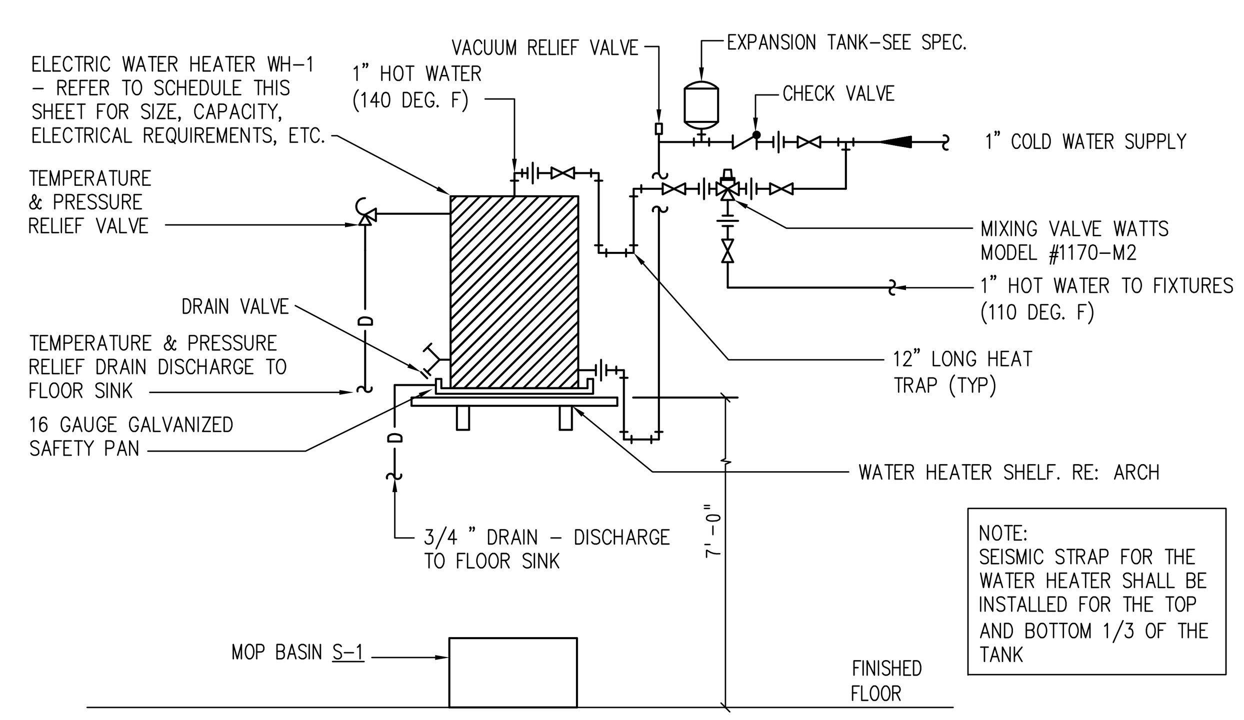

2 / P-1.3 WATER HEATER DETAIL
SCALE: NOT TO SCALE

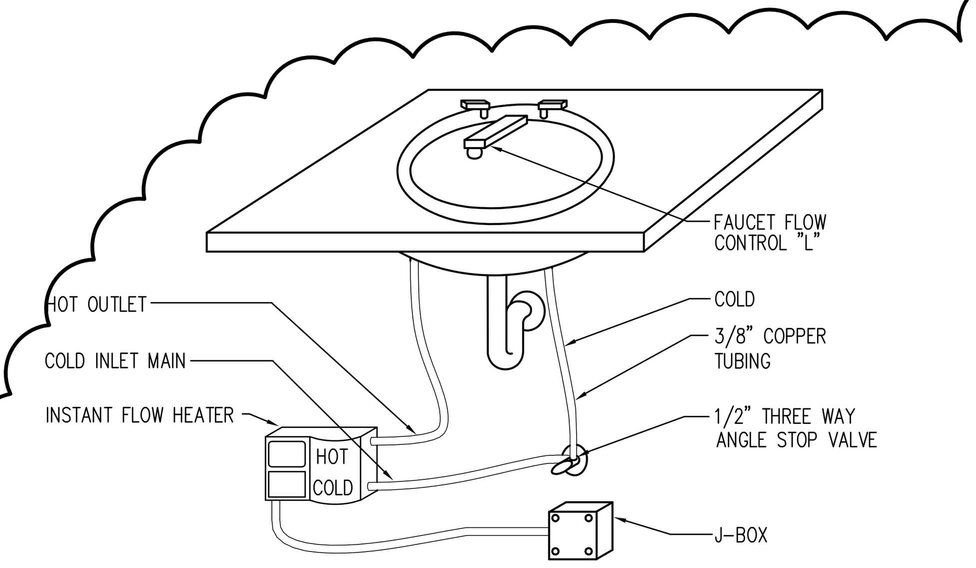

5 / P-1.3 INSTANTANEOUS WATER HEATER
SCALE: NOT TO SCALE

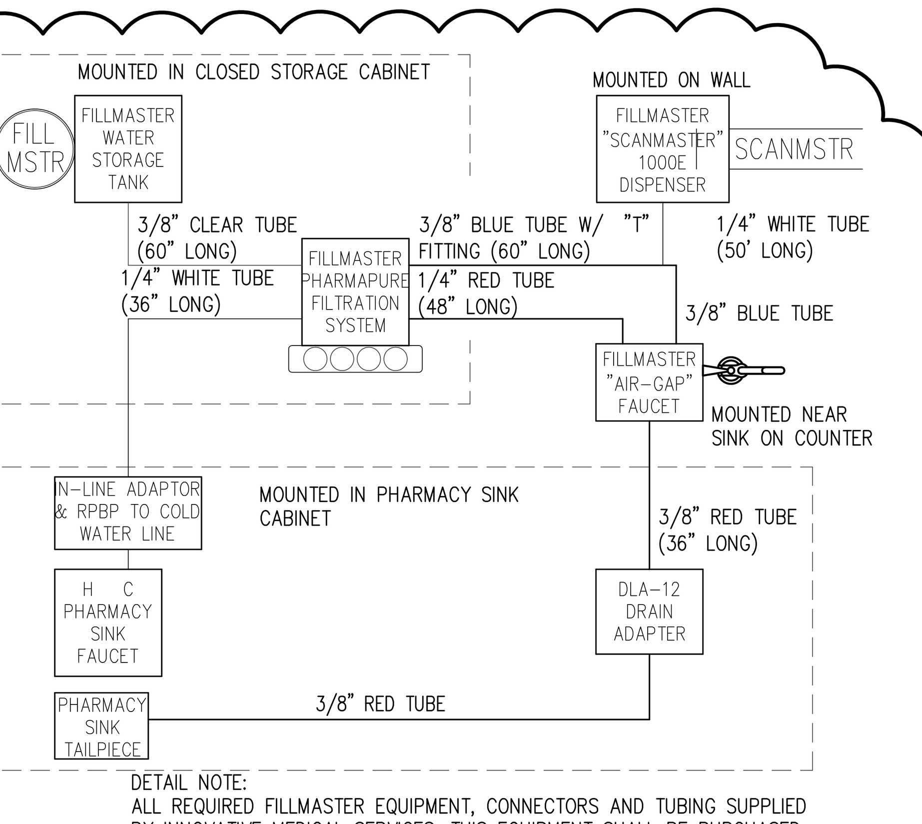

DETAIL NOTE:
ALL REQUIRED FILLMASTER EQUIPMENT, CONNECTORS AND TUBING SUPPLIED BY INNOVATIVE MEDICAL SERVICES. THIS EQUIPMENT SHALL BE PURCHASED AND INSTALLED BY GENERAL CONTRACTOR.

ESTIMATED MAXIMUM DISCHARGE RATE FOR THE FILM PROCESSOR IS 25 GAL/DAY AT A PH FACTOR OF 7.0-8.0.

6 / P-1.3 WATER PURIFICATION DETAIL
SCALE: NOT TO SCALE

RPM Engineers, Inc.
102 DISCOVERY
Irvine, Ca. 92618
Tel: 949-450-1229
Fax: 949-450-1454
Contact: Maurice E. Yee ext. 208

ROBERT KUBICEK Architects And Associates, Inc.
18662 MacArthur Blvd. Ste.200
Irvine, California 92612
(949) 798-3838
www.rkaa.com

REGISTERED PROFESSIONAL ENGINEER MAURICE E. YEE No. 30465 Exp. 12-31-11 MECHANICAL STATE OF CALIFORNIA

date:

COPYRIGHT . ALL RIGHTS RESERVED. ROBERT KUBICEK ARCHITECTS AND ASSOC, INC. THIS DRAWING IS AN INSTRUMENT OF SERVICE. IT IS THE PROPERTY OF ROBERT KUBICEK ARCHITECTS AND ASSOC, INC. AND MAY NOT BE REPRODUCED, OR REPRODUCTION HERE OF USED, WITHOUT WRITTEN PERMISSION OF THE ARCHITECT.

01/06/11	CHATTEL ARCH. SUBMITTAL
01/10/11	PLAN CHECK CORRECTIONS
01/27/11	CHATTEL ARCH. SUBMITTAL

NOTICE OF ALTERNATE BILLING OR PAYMENT CYCLE: THIS CONTRACT MAY ALLOW THE OWNER TO REQUIRE THE SUBMISSION OF BILLINGS OR ESTIMATES IN BILLING CYCLES OTHER THAN THIRTY DAYS. THIS CONTRACT MAY ALLOW THE OWNER TO MAKE PAYMENT ON SOME ALTERNATIVE SCHEDULE AFTER CERTIFICATION AND APPROVAL OF BILLING AND ESTIMATES. A WRITTEN DESCRIPTION OF SUCH OTHER BILLING AND/OR CYCLE APPLICABLE TO THE PROJECT IS AVAILABLE FROM THE OWNER AT THE OFFICES OF

OR HIS DESIGNATED AGENT SHALL PROVIDE THIS WRITTEN DESCRIPTION ON REQUEST

DEVELOPER:
CHARLES COMPANY
9034 W. SUNSET BLVD.
WEST HOLLYWOOD
CA 90069
TEL (310) 247-0900
FAX (310) 247-1525

CVS pharmacy
STORE #49557
909 S. ATLANTIC BLVD
LOS ANGELES, CA

design RKA
drawn RKA
check RKA

sheet P-1.3
of 3
job 09151

RPM# 10-282 01/27/11

NOTE: ALL ABOVE GRADE RISER PIPING TO BE DYNAFLOW W/ GROOVED FITTINGS AND / OR WELDED OUTLETS AND ALL DRAIN PIPING TO BE DYNATHREAD W/ SCREWED FITTINGS.

ALL RISER PIPING TO BE INSTALLED EXPOSED OUTSIDE BLDG.

RISER COMPONENTS:

1. POTTER WATERFLOW SWITCH WITH RETARD UL LISTED/ OR EQUAL (WIRING BY OTHERS)
2. 2" TEST/DRAIN MODULE W/ DRAIN SIGN (UL LISTED) "SYSTEM MAIN DRAIN"
3. 300 PSI WATER PRESSURE GAUGE
4. 6" FLEXIBLE GROOVED COUPLING
5. 6" GROOVED BUTTERFLY VA. (UL LISTED) W/ TAMPER SWITCH (WIRING BY OTHERS)
6. GRV. X FL. ADAPTER
7. 6" x 4" REDUCING GROOVED COUPLING
8. 4" 90 DEGREE GROOVED ELBOW
9. HYDRAULIC CALC. PLATE W/ SYSTEM DEMAND

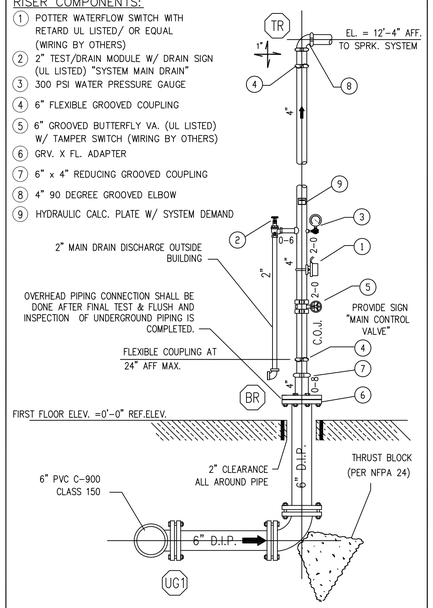

SYSTEM RISER ASSEMBLY DETAIL (1)
NO SCALE

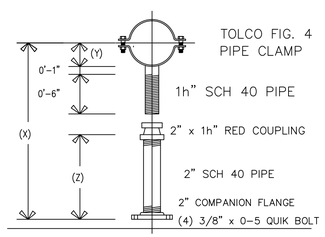

(X) – (Y) – 0'-5" = (Z) LENGTH OF 2" PIPE
10" PIPE (Y) = 5h" 6" PIPE (Y) = 3h"
8" PIPE (Y) = 4h" 4" PIPE (Y) = 2h"

RODDING AND GLANDS DETAILS (5)
NO SCALE

PROPOSED 6" AMES MODEL 3000ss BACKFLOW PREVENTOR

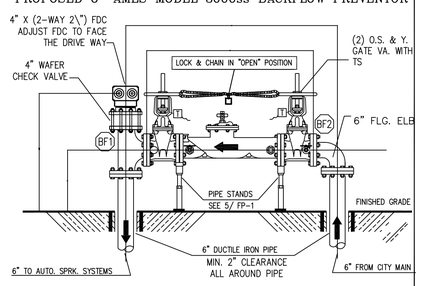

INSTALLATION TO CONFIRM TO RCFD STANDARD 5-10b, AND TO BE APPROVED BY CVWD.

DACKFLOW & FDC ASSEMBLY DETAIL (2)
NO SCALE

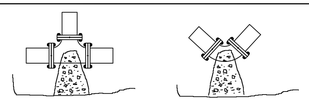

BEARING AREA OF CONCRETE THRUST BLOCKS (IN SQUARE FEET)

PIPE SIZE	22.5 BEND	45 BEND	TEE, PLUG, 90
4"	2	2	2
6"	3	3	4
8"	4	5	6

AREAS IN TABLE HAVE BEEN DERIVED USING A WATER PRESSURE AT 150 PSI AND SOIL RESISTANCE OF 2000 PSI THIS VALUES IN THE TABLE ABOVE SHOULD BE MULTIPLY BY THE FOLLOWING FACTORS FOR OTHERS SOIL CONDITIONS

SOFT CLAY = 4 SAND 2
SAND AND GRAVEL 1.33 SHALE .4

THRUST BLOCKS DETAILS & NOTES (4)
NO SCALE

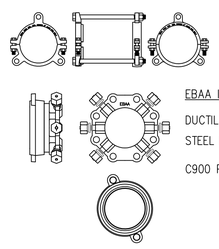

EBAA IRON 2104 PRESSURE RATINGS:

DUCTILE IRON PIPE: 350 psi
STEEL PIPE: 350 psi
C900 PVC PIPE: 100 psi for DR25
150 psi for DR18
200 psi for DR14

NOTE: THE SERIES 2104 IS UL LISTED FOR USE ON BOTH PVC AND DUCTILE IRON PIPE.

RODDING AND GLANDS DETAILS (3)
NO SCALE

UNDERGROUND GENERAL NOTES

1. DESIGN AND INSTALLATION OF UNDERGROUND PIPING SHALL BE IN ACCORDANCE WITH NFPA 24, 2007 EDITION.
2. ALL MATERIAL SHALL BE UL LISTED FOR FIRE PROTECTION USE.
3. ALL PIPING TO HAVE A MINIMUM 30" BURY, PIPING UNDER TRAFFIC AREAS TO HAVE A MINIMUM OF 36" BURY.
4. UNDERGROUND PIPING SHALL BE AWWA C-900, CLASS 150 PVC. OR BE DUCTILE IRON CLASS 52 WITH DUCTILE IRON MECHANICAL JOINT FITTINGS.
5. ALL FITTINGS THAT CHANGE DIRECTION SHALL BE RESTRAINED. PIPE CLAMPS, TIE-RODS, THRUST BLOCKS, AND LOCKED MECHANICAL OR PUSH-ON JOINTS UTILIZING SET SCREWS WITH RETAINER GLANDS OR OTHER APPROVED METHODS SHALL BE USED IN ACCORDANCE WITH NFPA 24, 2007.
6. DUCTILE IRON PIPING TO BE INSTALLED FOR RISER AND BACKFLOW STUB UPS.

ABBREVIATIONS

AFF – ABOVE FINISHED FLOOR
AS – AUTOMATIC SPRINKLER
BBB – BELOW BOTTOM OF BEAM
BBD – BELOW BOTTOM OF DECK
BFP – BACKFLOW PREVENTOR
CSP – COMBINATION STANDPIPE
DDC – DOUBLE DETECTOR CHECK
DIA – DIAMETER
DP – DRY PENDENT SPRINKLER
DSP – DRY STANDPIPE
FH – FIRE HYDRANT
FDC – FIRE DEPARTMENT CONNECTION
FHC – FIRE HOSE CABINET
FHV – FIRE HOSE VALVE
FS – FLOW SWITCH
GBE – GROOVE BOTH ENDS
GOE – GROOVE ONE END
GRV – GROOVED
GxT – GROOVED BY THREAD
MAX – MAXIMUM
MIN – MINIMUM
NIC – NOT IN CONTRACT
NRS – NON-RISING STEM
OS&Y – OUTSIDE SCREW AND YOKE
PIV – POST INDICATOR VALVE
POC – POINT OF CONNECTION
PRV – PRESSURE REDUCING VALVE
RC – REDUCING COUPLING
SCH – SCHEDULE
SRC – SUPPLY SOURCE
SP – STANDPIPE
SSP – STANDARD SPRAY PENDENT SPRINKLER
SSU – STANDARD SPRAY UPRIGHT SPRINKLER
TxT – THREAD BOTH ENDS
TS – TAMPER SWITCH
UG – UNDERGROUND

FIRE PROTECTION SYMBOLS

(01) = HYDRAULIC REFERENCE NODE (FIRE SPRINKLER)
= SPRINKLER RISER W/ CONTROL VALVE
= PIPE HANGER
1" / 7'-0" = 4-WAY SWAY BRACE
1" / 7'-0" = 2-WAY LATERAL SWAY BRACE
1" / 7'-0" = 2-WAY LONGITUDINAL SWAY BRACE
= 1" AUXILIARY DRAIN WITH ANGLE VALVE AND PLUG
= RIGID GROOVED COUPLING
= FLEXIBLE GROOVED COUPLING
= GROOVED CAP (SEE PIPING PLANS FOR SIZE)
= THREADED CAP (SEE PIPING PLANS FOR SIZE)
2" / 3-9 = PIPE DIAMETER / LENGTH
= FIRE STOPPING – PENETRATION THRU RATED WALLS

VICINITY MAP

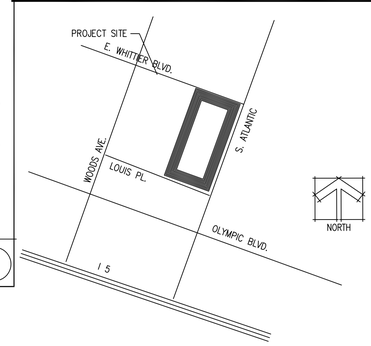

SHEET INDEX

FP-0 FIRE PROTECTION GENERAL NOTES, DETAILS & REQUIREMENTS
FP-1 FIRE PROTECTION SITE PIPING PLAN
FP-2 FIRE PROTECTION DETAILS & BUILDING SECTION
FP-3 FIRE PROTECTION MECH. LEVEL PIPING PLAN
FP-4 FIRE PROTECTION FLOOR LEVEL PIPING PLAN

PROJECT INFORMATION

OWNER: CHARLES COMP.
PROJECT ADDRESS: 909 S. ATLANTIC BLVD. LOS ANGELES, CA
A.P.N.:
OCCUPANCY GROUP: B / M
CONSTRUCTION TYPE: V – B
FIRE SPRINKLERS: YES
NO. OF STORIES: 1
BUILDING AREA: 11,840 SQ. FT.

APPLICABLE CODES

2006 INTERNATIONAL BUILDING CODE
2007 BUILDING STANDARDS ADMINISTRATIVE CODE, PART I, TITLE 24 C.C.R
2007 CALIFORNIA BUILDING CODE (CBC), PART 2, TITLE 24 C.C.R.,
2007 CALIFORNIA ELECTRICAL CODE (CEC), PART 3, TITLE 24 C.C.R.,
2007 CALIFORNIA MECHANICAL CODE (CMC), PART 4, TITLE 24 C.C.R.,
2007 CALIFORNIA PLUMBING CODE (CPC), PART 5, TITLE 24 C.C.R.,
2007 CALIFORNIA FIRE CODE (CFC), PART 9, TITLE 24 C.C.R.,
2008 CALIFORNIA ENERGY CODE, PART 6, TITLE 24 C.C.R.,
2007 CALIFORNIA REFERENCED STANDARDS CODE, PART 12, TITLE 24, C.C.R.
2007 TITLE 19, C.C.R., PUBLIC SAFETY, STATE FIRE MARSHAL REGULATIONS
NFPA 13 2002 EDITION WITH CALIFORNIA AMENDMENTS
NFPA 24 2007 EDITION WITH CALIFORNIA AMENDMENTS

WATER FLOW TEST DATA

PROVIDED BY: CALIFORNIA WATER SERVICE COMPANY
8-24-10 DIST. SUPERINTENDENT

LOCATION: S. OF WHITTIER BLVD-28' W. OF ATLANTIC BLVD.
HYD.#1259-6"X4"X2 1/2"

DATE: 08/24/10
STATIC: 73.0 psi
RESIDUAL: 60.0 psi

CALCULATED FLOW @ 20 psi: 4,103

NOTE:
a) 10% REDUCED VALUES ARE USED FOR HYDRAULIC CALCULATIONS.
b) A COPY OF WATER FLOW TEST DATA REPORT IS ATTACHED TO HYDRAULIC CALCULATIONS.

GENERAL NOTES

1. SCOPE OF WORK: DESIGN AND INSTALLATION OF A NEW AUTOMATIC SPRINKLER SYSTEM, INCLUDING OVERHEAD AND UNDERGROUND PIPING FROM DOWNSTREAM OF THE PROPERTY LINE.
   THIS IS A 1-STORY, EXISTING HISTORIC BUILDING.
   PROPOSED "CVS" PHARMACY WILL BE LOCATED INSIDE EXISTING BUILDING
   FIRE PROTECTION SYSTEM IS A NEW ADDITION.
2. AUTOMATIC FIRE SPRINKLER SYSTEM DESIGN AND INSTALLATION SHALL BE IN ACCORDANCE WITH NFPA 13, 2002, NFPA 24, 2007, AND PER LA.Co.FD. REQ#7/#8 REQUIREMENTS
3. IT IS THE RESPONSIBILITY OF THE OWNER TO MAINTAIN THE INTEGRITY OF THE SPRINKLER SYSTEM.
4. ONLY NEW SPRINKLERS SHALL BE EMPLOYED IN THE INSTALLATION OF THE SPRINKLER SYSTEM.
5. THE SYSTEM SHALL ONLY EMPLOY THE USE OF APPROVED MATERIALS AND DEVICES.
6. ALL VALVES AND FIRE DEPARTMENT CONNECTIONS SHALL HAVE PERMANENTLY AFFIXED SIGNS INDICATING THEIR FUNCTION.
7. A STOCK OF SPARE SPRINKLERS OF EACH STYLE, TYPE, AND TEMP. RATING ALONG WITH A SPRINKLER WRENCH SHALL BE LOCATED AT THE MAIN RISER.
8. SYSTEM PIPING SHALL BE HYDROSTATIC ALLY TESTED AT 200 PSI FOR TWO HOURS OR AT 50 PSI ABOVE THE MAXIMUM SYSTEM OPERATING PRESSURE, WHICHEVER IS GREATER.
9. ALL UNDERGROUND MAINS AND LEAD-IN CONNECTIONS SHALL BE FLUSHED, AS INDICATED IN NFPA PRIOR TO CONNECTING TO THE OVERHEAD PIPING. THE FLUSHING SHALL CONTINUE UNTIL THE WATER IS CLEAR. FLUSHING SHOULD BE PERFORMED AT THE TIME OF HYDROSTATIC TEST, AND SHALL BE WITNESSED BY A FIRE PREVENTION DIVISION INSPECTOR.
10. FIRE PROTECTION PLANS SHALL BE APPROVED PRIOR TO THE INSTALLATION OF ANY PIPE. A SET OF APPROVED PLANS SHALL BE MAINTAINED AT ALL TIMES ON THE JOB SITE.
11. INSTALL FLEXIBLE COUPLINGS WITHIN 24" OF THE TOP OF DROPS EXCEEDING 15'-0" LONG TO PORTIONS OF SYSTEM SUPPLYING MORE THAN ONE HEAD, REGARDLESS OF PIPE SIZE.
12. INSTALL INTERMEDIATE TEMPERATURE RATED SPRINKLERS IN ALL MECHANICAL, ELECTRICAL, EQUIPMENT ROOMS, AND IN UNVENTILATED ATTICS.
13. PIPE PENETRATIONS OF RATED ASSEMBLIES SHALL BE FIRE STOPPED FIRE-STOPPING SHALL BE AN APPROVED U.L. LISTED MATERIAL.
14. WELDING SHALL BE PERFORMED PER NFPA 13 REQUIREMENTS.
15. THE FIRE PROTECTION CONTRACTOR WILL PROVIDE THE OWNER WITH THE NECESSARY INSTRUCTION MANUALS FOR THE UPKEEP OF THE SYSTEM AS WELL AS A COPY OF NFPA 25.

MATERIAL NOTES

1. ONLY NEW AND UL-LISTED / APPROVED MATERIALS SHALL BE INSTALLED THROUGHOUT THE BUILDING.
2. ALL 2 IN. AND SMALLER PIPING SHALL BE DYNATHREAD, ASTM A-135 BLACK STEEL.
3. ALL 2 IN. AND SMALLER FITTINGS SHALL BE C-125 (175 psi WOG) (ANSI B16.4) CAST IRON.
4. ALL 2 ½ IN. AND LARGER PIPING SHALL BE DYNAFLOW, ASTM A-135 BLACK STEEL WITH WELDED, MECHANICAL TEE, AND/OR GROOVED FITTINGS.
5. ALL 2 ½ IN. AND LARGER GROOVED TEES, ELBOWS, REDUCERS, AND CAPS SHALL BE MALLEABLE IRON (ASTM A-47), DUCTILE IRON (ASTM A-536). FINISH TO BE FACTORY PAINTED.
6. ALL THREADED PIPE AND FITTINGS SHALL HAVE THREAD CUT TO ANSI/ASME B1.20.1, PIPE THREAD, GENERAL PURPOSE.
7. WELDED OUTLETS SHALL BE (ANSI B16.11) FORGED STEEL, UL LISTED FOR WORKING PRESSURE TO 300 PSI.
8. ALL FLANGED FITTINGS SHALL BE CLASS 125 (175 psi WOG) (ANSI B16.1) CAST IRON BLACK.
9. THE COMPONENTS OF HANGER ASSEMBLIES THAT DIRECTLY ATTACHED TO THE PIPE OR TO THE BUILDING SHALL BE UL LISTED.

APPROVALS BY LOS ANGELES COUNTY FIRE DEPARTMENT

BAY CITY FIRE PROTECTION INC.
CONSULTING I ENGINEERING I SERVICE
INSTALLATION I RETROFIT
TESTING I INSPECTION
LICENSED FIRE PROTECTION CONTRACTOR C-16 886800
10255 Oro Vista Ave., Sunland, CA 91040 Tel: 818-610-3062

SPRINKLERS

QTY.	SYMBOL	MANUF.	MODEL	SIN #	STYLE	ANT	K	ORIFICE	TEMP	RESPONSE	FINISH	ESCUTCHEON MOD./FINISH
QTY TOTAL												

REVISIONS

NO.	DATE	BY	CORRECTION MADE

PROJECT: CVS PHARMACY
STORE #49557
909 S. ATLANTIC BLVD.
LOS ANGELES,CA

CONTRACT WITH: CHARLES COMP

DRAWING DESCRIPTION : NOTES, DETAILS &REQ.
Chattel Architecture Submittal

DATE : As Noted

DATE : 1/6/11

DRAWING NO.: FP-0 of

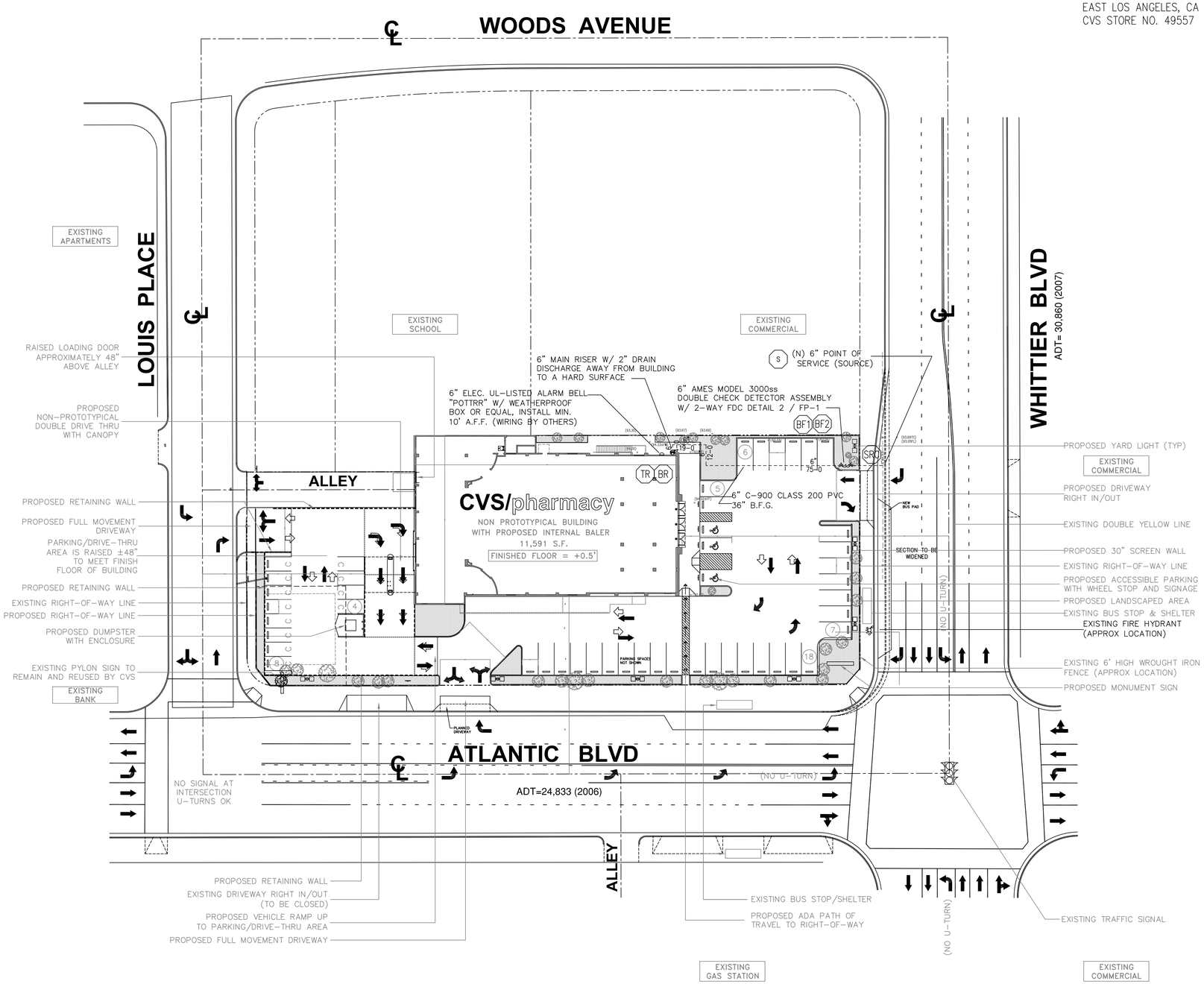

1 SITE PIPING PLAN

Scale: 1"=30'-0"

0 15' 30' 60' 75'

N

CVS/pharmacy

909 S. ATLANTIC BLVD.
EAST LOS ANGELES, CA 90022-4003
CVS STORE NO. 49557

BAY CITY FIRE PROTECTION INC.

CONSULTING | ENGINEERING | SERVICE
INSTALLATION | RETROFIT
TESTING | INSPECTION

10255 Oro Vista Ave., Sunland, CA 91040 Tel: 818-610-3062

SPRINKLERS

QTY	SYMBOL	MANUF.	MODEL	SIN #	STYLE	NPT	K	ORIFICE	TEMP	RESPONSE	FINISH	ESCUTCHEON MOD. / FINISH
QTY	TOTAL											

REVISIONS

NO.	DATE	BY	CORRECTION MADE

PROJECT: CVS PHARMACY
STORE # 49557
909 S. ATLANTIC BLVD.
LOS ANGELES,CA

CONTRACT WITH: Contract with

DRAWING DESCRIPTION : SITE PIPING PLAN
Chattel Architecture Submittal

SCALE: As Noted

DATE : 1/6/11

DRAWING NO.: FP-1 of

HANGERS AND SWAY BRACING DETAILS & NOTES

HYDRAULIC DESIGN SYSTEM INFORMATION

Job Name:	CVS STORE# 49557
Location:	RETAIL AREA - (ORDINARY HAZARD 2)
Density:	0.20 gpm/sqft Area of application: 1,500 sq. ft.
Demand:	454.5 GPM @ 56.2 PSI At: SRC (SOURCE)
The above information includes a hose Allowance of:	250.00 GPM

HYDRAULIC DESIGN CRITERIA:

1. THE RETAIL AREA IS DESIGNED FOR AN ORDINARY HAZARD GROUP 2 OCCUPANCY WITH A DENSITY OF 0.20 gpm/s.f. OVER THE MOST HYDRAULICALLY REMOTE AREA OF 1,500 s.f.. THE SYSTEM DESIGN INCLUDES A TOTAL OF 250 gpm FOR COMBINED HOSE ALLOWANCE. REFER TO HYDRAULIC CALCULATIONS FOR MORE INFORMATION.
2. AVAILABLE WATER FLOW DATA IS REDUCED BY 10% FOR HYDRAULIC CALCULATIONS.
3. ALL RETAIL AREA SPRINKLERS SHALL BE INSTALLED WITH DEFLECTOR AT MIN. 1" AND MAX. 12" FROM BOTTOM OF THE DECK.
4. MAXIMUM COVERAGE PER SPRINKLER SHALL BE 130 sq. ft. IN ALL RETAIL AREAS THAT ARE
5. CONSIDERED TO BE ORDINARY HAZARD GROUP 2 OCCUPANCY UTILIZING STANDARD SPRAY HEADS AND 16'X18' FOR LOBBY AND BALCONY AREAS WITH EXTENDED SIDEWALL HEADS.
6. MAXIMUM SPACING FOR STANDARD SPRAY Q. R. RECESSED PENDENT SPRINKLERS USED IN ALL COMMON AREAS SUCH AS REST ROOMS, CORRIDORS, AND OFFICES SHALL BE 225 sq. ft. PER SPRINKLER.

HANGERS & SWAY BRACINGS:

1. THE END SPRINKLER ON A LINE SHALL BE RESTRAINED AGAINST EXCESSIVE VERTICAL AND LATERAL MOVEMENT. 2002 NFPA 13 9.3.6.3 PROVIDE RESTRAINT DETAIL MEETING THE REQUIREMENTS OF 9.3.6.1
2. THE LAST LENGTH OF PIPE AT THE END OF A FEED OR CROSS MAIN SHALL BE PROVIDED WITH A LATERAL BRACE. 2002 NFPA 13 9.3.5.3.4
3. THE ELIMINATION OF LATERAL SWAY BRACES IS ALLOWED WHEN PIPES ARE INDIVIDUALLY SUPPORTED BY RODS LESS THAN 6 INCHES LONG MEASURED BETWEEN THE TOP OF THE PIPE AND THE POINT OF ATTACHMENT TO THE BUILDING STRUCTURE. 2002 NFPA 13 9.3.5.3.6
4. MAINTAIN A MAXIMUM SPACING FOR LATERAL SWAY BRACING OF 40 FT. ON CENTER INTERVALS BETWEEN BRACES, OR LESS AS REQUIRED BASED ON THE ATTACHMENT SIZE. 2002 NFPA 13 9.3.5.3.1
5. MAINTAIN A MAXIMUM SPACING FOR LONGITUDINAL SWAY BRACING OF 80 FT. ON CENTER INTERVALS BETWEEN BRACES, OR LESS AS REQUIRED BASED ON THE ATTACHMENT SIZE. 2002 NFPA 13 9.3.5.4.1

FASTENER CHART

PIPE SIZE	EYE RODS / SIDE BEAM HANGERS	ROD SIZE
UP TO 2"	(2) #16 x 2" DRIVE SCREWS*	3/8"
UP TO 2"	3/8" x 2-1/2" LAG SCREW	3/8"
2-1/2", 3", 4"	1/2" x 3" LAG SCREW	3/8"

*Acceptable fastener when using the Tolco figure 58 threaded side beam bracket.

FASTENER CHART

PIPE SIZE	"U" HANGERS	ROD SIZE
UP TO 2"	#16 x 2" DRIVE SCREWS	5/16"
2-1/2", 3", 3-1/2"	3/8" x 2-1/2" LAG SCREWS	3/8"
4", 5", 6"	1/2" x 3" LAG SCREWS	3/8"
8"	5/8" x 3" LAG SCREWS	1/2"

PIPE CLEARANCE

NFPA 13, 2002 SEC. 9-3.4:

CLEARANCE SHALL BE PROVIDED AROUND ALL PIPING EXTENDING THROUGH WALLS, FLOORS AND FOUNDATIONS INCLUDING DRAINS AND FIRE DEPT. CONNECTIONS.

EXCEPTION NO. 2: NO CLEARANCE IS NECESSARY IF FLEXIBLE COUPLINGS ARE LOCATED WITHIN 1 FT. OF EACH SIDE OF A WALL, PLATFORM OR FOUNDATION.

MINIMUM CLEARANCE REQUIRED AROUND ALL SIDE OF PIPE	
PIPE SIZE	REQ. CLEARANCE
1" - 3½"	1 IN.
4" - 8"	2 IN.

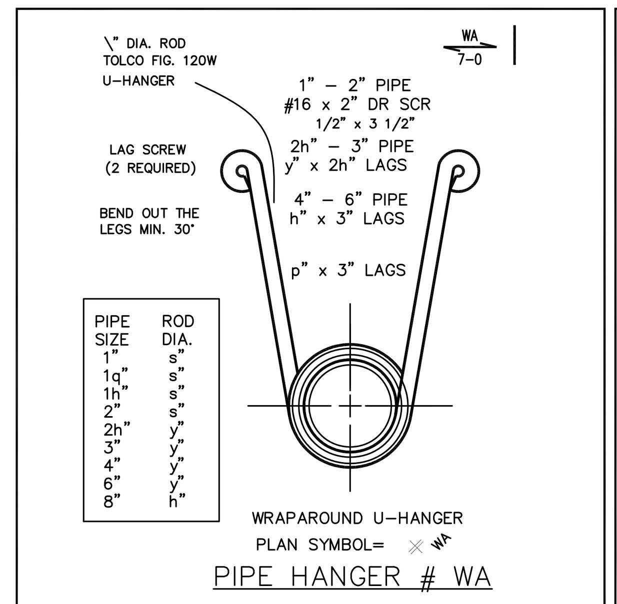

PIPE HANGER # WA

NOTE: INSTALL WRAPAROUND U-HOOK HANGER ON ALL 2" AND 2½" MAINS TO ACCOMMODATE FOR BOTH LATERAL AND LONGITUDINAL SWAY BRACING REQUIREMENTS.

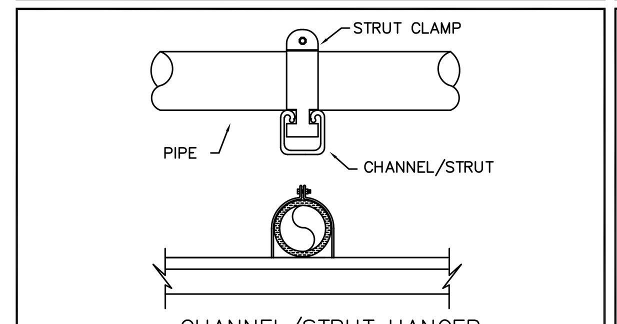

CHANNEL/STRUT HANGER
NTS

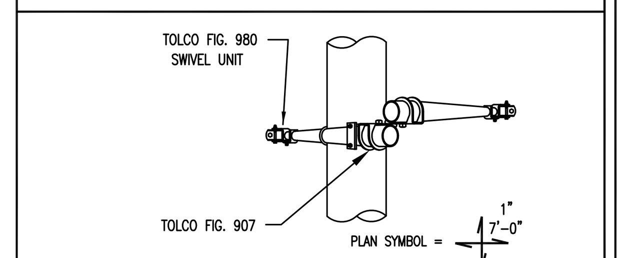

4-WAY RISER SWAY-BRACE
NO SCALE

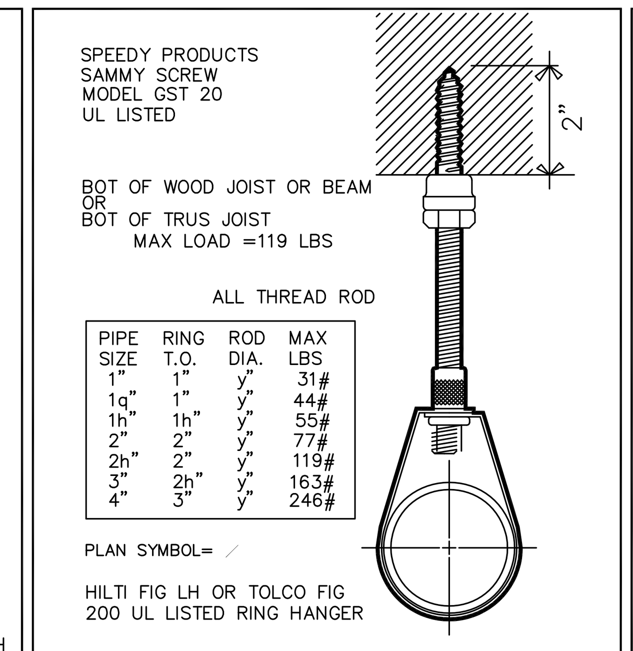

ALTERNATE PIPE HANGER # 1
NTS

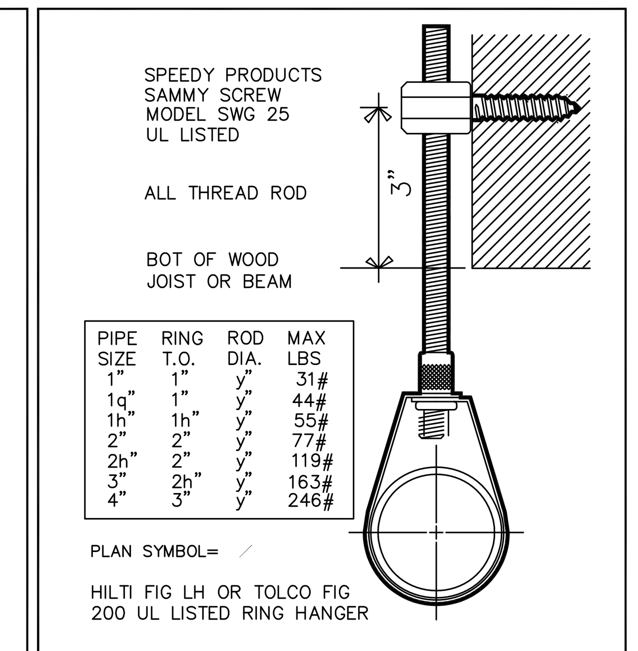

ALTERNATE PIPE HANGER # 1
NTS

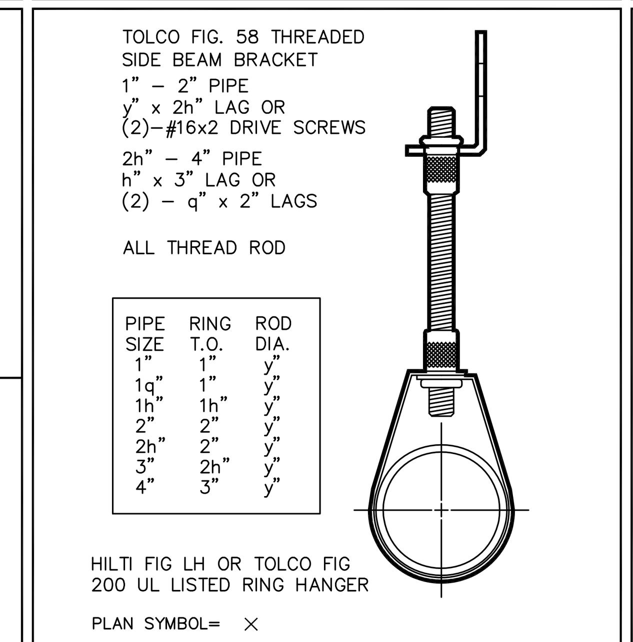

ALTERNATE PIPE HANGER # 4
NTS

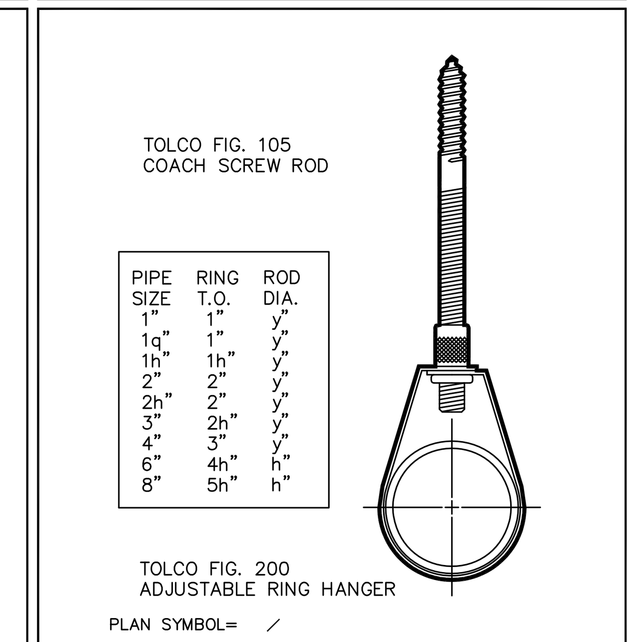

ALTERNATE PIPE HANGER # 1
NTS

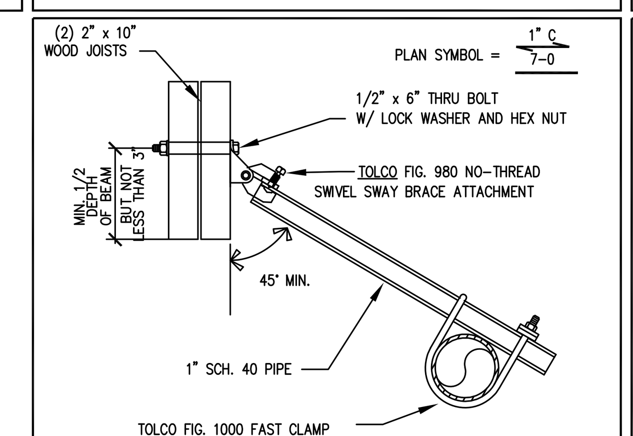

2-WAY LATERAL EQB
N.T.S.

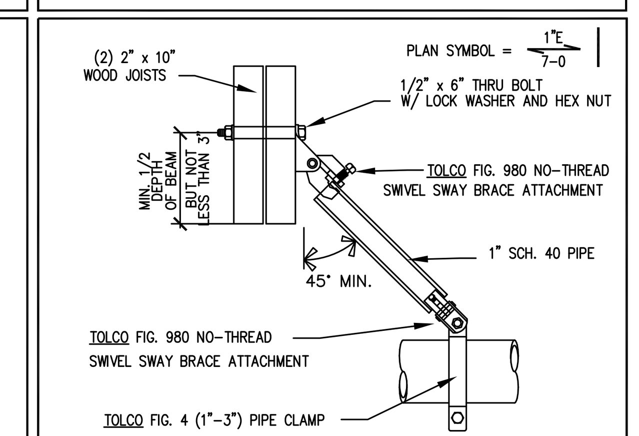

2-WAY LONGITUDINAL EQB "C"
N.T.S.

LATERAL EARTHQUAKE BRACE ANALYSIS

PIPE SIZE	WEIGHT PER FOOT (WATER FILLED)	PIPE LENGTH (FT)	WEIGHT (LB)
1" (DYNA-THRD)	1.75	20	35.00
1[" (DYNA-THRD)	2.54	148	375.92
1\" (DYNA-THRD)	3.22	0.0	0.00
2\" (DYNA FLOW)	7.18	40	287.20

TOTAL LOAD = 698.12 lb.
1/2 WEIGHT OF WATER FILLED PIPE = 349.06 lb.
15% ADD FOR FITTINGS= 52.36 lb.
TOTAL LOAD = 401.42 lb.

NFPA 13, 2002
BRACING TYPE = "E" MIN. 45° WITH VERTICAL
ATTACHMENT TYPE = THRU BOLT 1/2" x 5\" LONG
ALLOWABLE LOAD = 680 LB
LATERAL BRACE SPACING = 40 FT

LONGITUDINAL EARTHQUAKE BRACE ANALYSIS

PIPE SIZE	WEIGHT PER FOOT (WATER FILLED)	PIPE LENGTH (FT)	WEIGHT (LB)
2\" (DYNA FLOW)	7.18	80'	574.4

TOTAL LOAD = 574.4 lb.
1/2 WEIGHT OF WATER FILLED PIPE = 287.2 lb.
15% ADD FOR FITTINGS= 43.08 lb.
TOTAL LOAD = 303.28 lb.

NFPA 13, 2002
BRACING TYPE = "H" MIN. 45° WITH VERTICAL
ATTACHMENT TYPE = THRU BOLT 1/2" x 5\" LONG
ALLOWABLE LOAD = 479 LB
LONGITUDINAL BRACE SPACING = 80 FT

SPRINKLER ASSEMBLY DETAILS

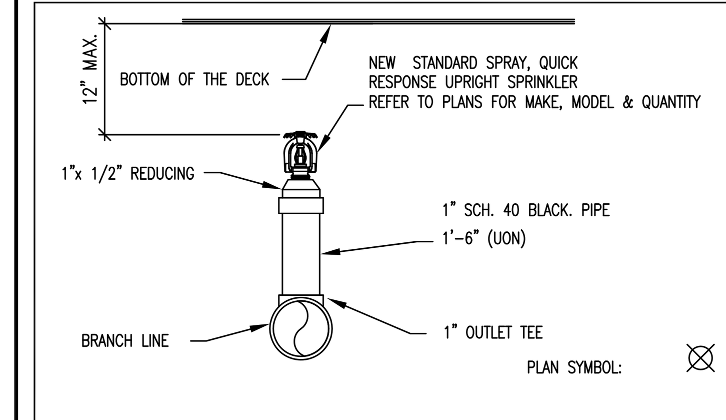

TYPICAL UPRIGHT SPRINKLER ON 1" SPRIG UP
NTS

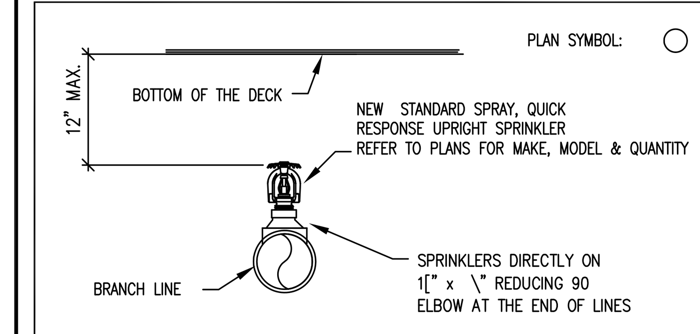

TYPICAL UPRIGHT SPRINKLER ON LINE
NTS

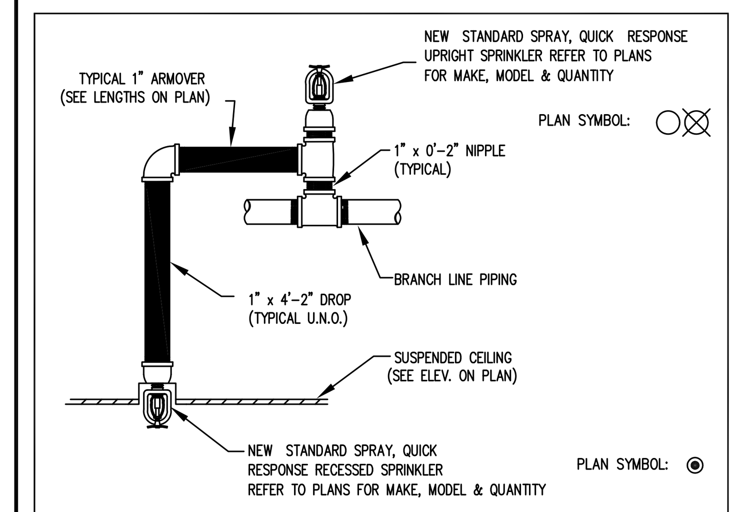

TYPICAL RECESSED SPRINKLER ON 1" DROP
NTS

KEY NOTES

1
2
3
4
5
6
7
8
9

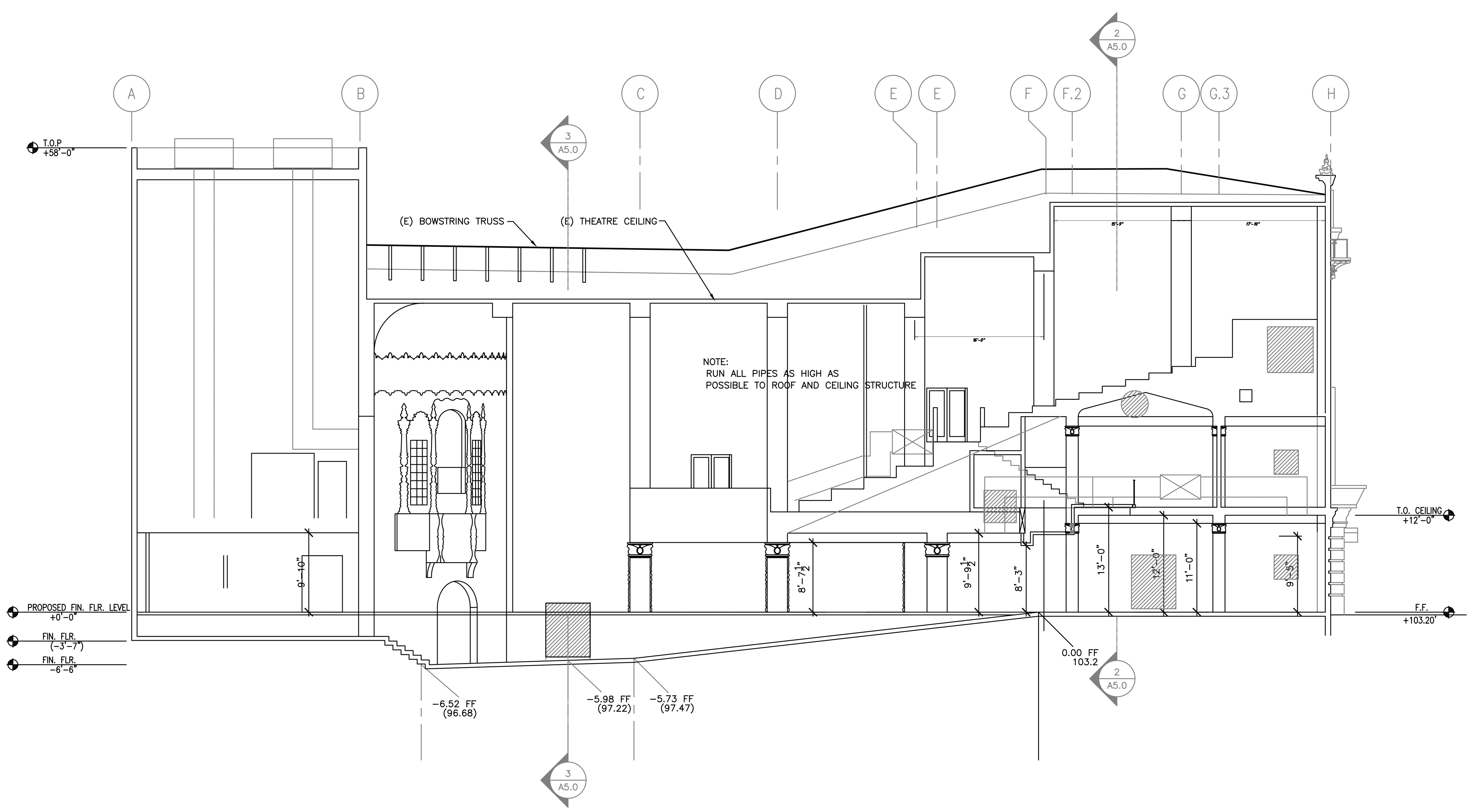

1 BUILDING SECTION
3/32"=1'-0"

BAY CITY FIRE PROTECTION INC.
CONSULTING I ENGINEERING I SERVICE
INSTALLATION I RETROFIT
TESTING I INSPECTION
10255 Oro Vista Ave., Sunland, CA 91040 Tel: 818-610-3062
LICENSED CONTRACTOR BAY CITY FIRE PROTECTION INC. CLASSIFICATION C-16 LICENSE NO. 886800 LOS ANGELES STATE OF CALIFORNIA

SPRINKLERS

QTY.	SYMBOL	MANUF.	MODEL	SIN #	STYLE	NPT	K	ORIFICE	TEMP.	RESPONSE	FINISH	ESCUTCHEON MOD./FINISH

QTY TOTAL

REVISIONS

NO.	DATE	BY	CORRECTION MADE

PROJECT: CVS PHARMACY
STORE #49557
909 S. ATLANTIC BLVD.
LOS ANGELES,CA

CONTRACT WITH: CHARLES COMP

DRAWING DESCRIPTION : SECTION, DETAILS & CALCS
Chattel Architecture Submittal

DATE : As Noted

DATE : 1/6/11

DRAWING NO.: FP-2 of

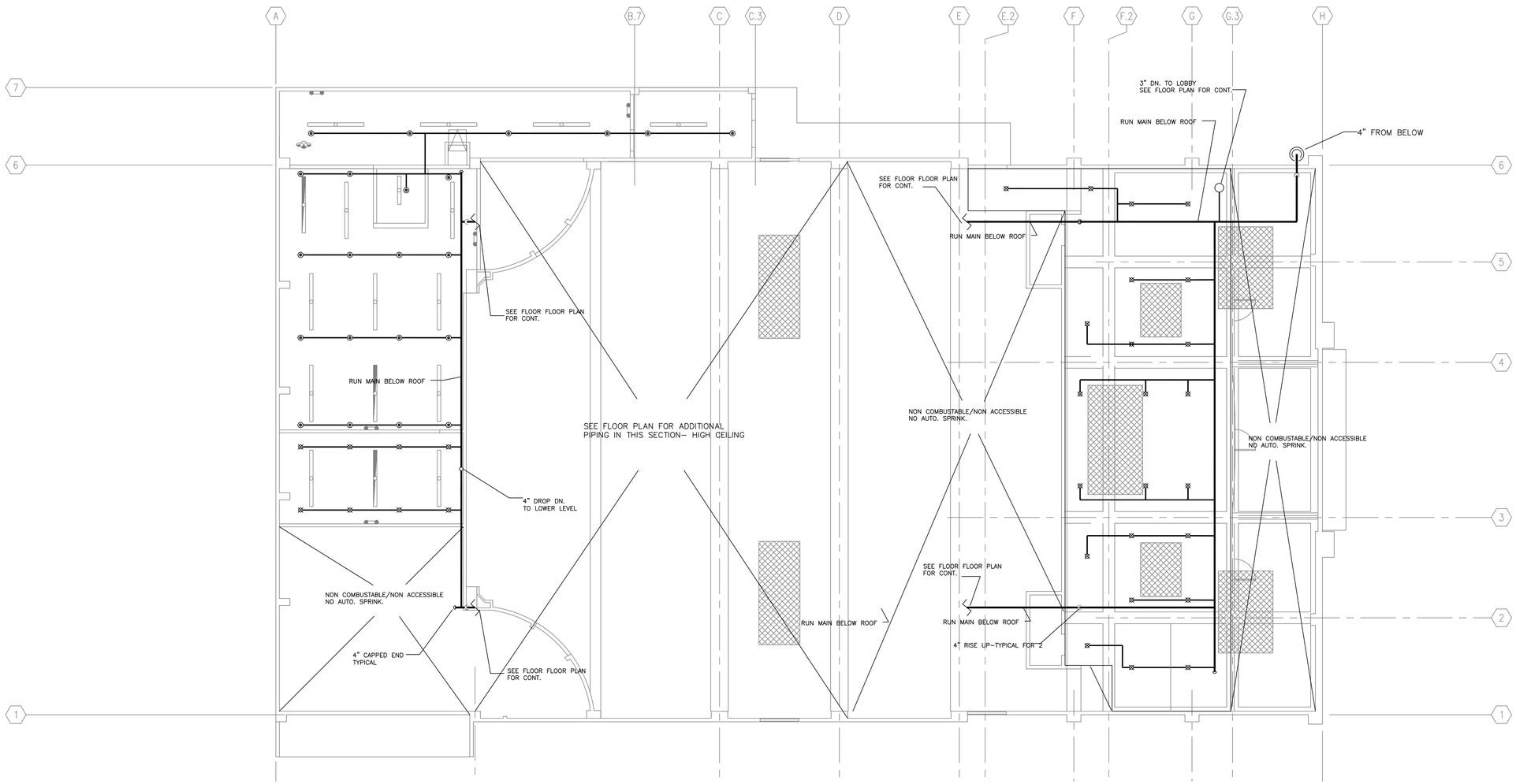

3 MEZZ. LEVEL PIPING PLAN

Scale: 1/8"=1'-0"

0 2' 4' 10' 20'

BAY CITY FIRE PROTECTION INC.

CONSULTING | ENGINEERING | SERVICE
INSTALLATION | RETROFIT
TESTING | INSPECTION

LICENSED FIRE PROTECTION CONTRACTOR
C-16
886800
STATE OF CALIFORNIA

10255 Oro Vista Ave., Sunland, CA 91040 Tel: 818-610-3062

SPRINKLERS

QTY	SYMBOL	MANUF	MODEL	SIN #	STYLE	NPT	K	ORIFICE	TEMP	RESPONSE	FINISH	ESCUTCHEON MOD / FINISH
		TYCO	TY4FRB	TY3131	UPRIGHT	1/2	5.6	1/2	155°	QUICK	BRASS	-
QTY	TOTAL											

REVISIONS

NO.	DATE	BY	CORRECTION MADE

PROJECT:

CVS PHARMACY
STORE #49557
909 S. ATLANTIC BLVD.
Chattel Architecture Submittal

CONTACT WITH: CHARLES COMP

DRAWING DESCRIPTION : MEZZ. LEVEL. PIPING PLAN

DATE : As Noted

DATE : 1/6/11

DRAWING NO.: FP-3 of

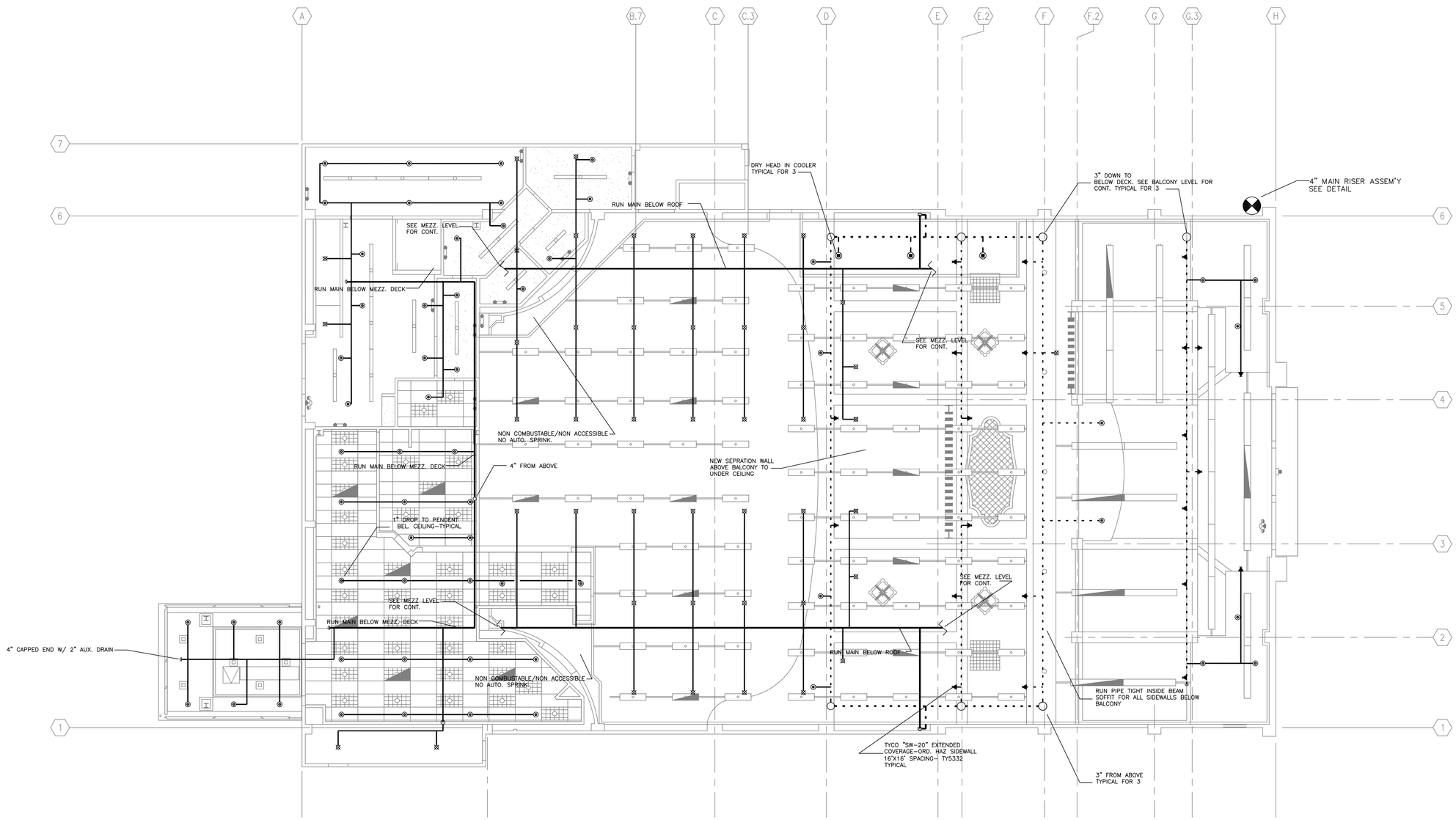

4 FLOOR PIPING PLAN

Scale: 1/8"=1'-0"

0 2' 4' 10' 20'

BAY CITY FIRE PROTECTION INC.

CONSULTING | ENGINEERING | SERVICE
INSTALLATION | RETROFIT
TESTING | INSPECTION

LICENSED FIRE PROTECTION CONTRACTOR
C-16
886800
STATE OF CALIFORNIA

10255 Oro Vista Ave., Sunland, CA 91040 Tel: 818-610-3062

SPRINKLERS

QTY	SYMBOL	MANUF	MODEL	SIN #	STYLE	NPT	K	ORIFICE	TEMP	RESPONSE	FINISH	ESCUTCHEON MOD / FINISH
		TYCO	TY-FRB	TY3131	UPRIGHT	1/2	5.6	1/2	155°	QUICK	BRASS	-
QTY TOTAL												

REVISIONS

NO.	DATE	BY	CORRECTION MADE

PROJECT:
CVS PHARMACY
STORE #49557
909 S. ATLANTIC BLVD.
LOS ANGELES,CA

CONTRACT WITH: CHARLES COMP

DRAWING DESCRIPTION : FLOOR PIPING PLAN
Chattel Architecture Submittal

DATE : As Noted

DATE : 1/6/11

DRAWING NO.: FP-4 of

LIGHTING FIXTURE SCHEDULE

ALL FIXTURES SHALL BE PURCHASED THROUGH: WIEDENBACH-BROWN CO. (888) 230 1569

REFER TO ELECTRICAL SPECIFICATIONS FOR ADDITIONAL REQUIREMENTS WHICH MAY NOT NECESSARILY BE REFLECTED IN CATALOG NUMBER AND/OR DESCRIPTION IN THIS SCHEDULE.

MARK	DESCRIPTION	MOUNTING	VOLT	LAMPS	REMARKS
SA	(1) SPAULDING #CR1-H40-H3-HS WITH 20'-0" POLE, ARM MOUNT SINGLE LUMINAIRE. POLE BASE 3'-0".	POLE MOUNTED RE: 3/SE-1.1	208	1-320W-SUPER METAL HALIDE PER LUMINAIRE	PROVIDE BRONZE FINISH. PROVIDE POLE WIND RATING FOR AREA INSTALLED.
SB	(1) LITHONIA #TDMSW-132-MVOLT-GEB10IS	SURFACE MOUNTED	120	2-F32/T8 LAMPS	

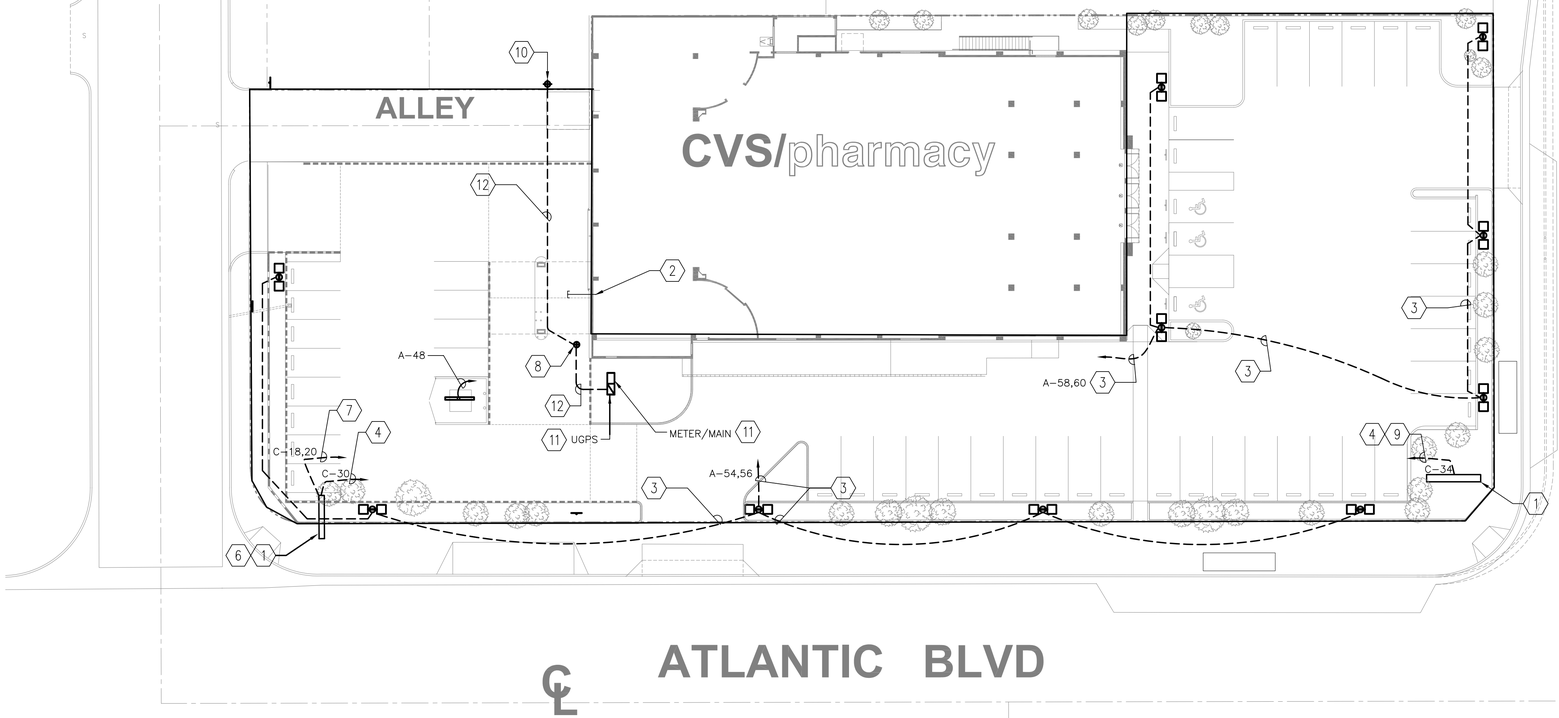

1 SE-1.1 SITE PLAN – ELECTRICAL
SCALE: 1"=20'-0"

GENERAL NOTES:

ELECTRONIC MESSAGE BOARD AND PYLON INSTALLATION COORDINATED BY SIGN VENDOR.
ELECTRONIC MESSAGE BOARD NOT CONNECTED TO EMS

GENERAL CONTRACTOR RESPONSIBILITY:

RUN 1 – 1" DIA. CONDUIT WITH 3 – 110 VOLT ELEC CABLES FROM PANEL BOARD IN THE ELECTRICAL ROOM WITH 30'-0" EXTRA WHIP.

RUN 1 – 2" DIA EMPTY CONDUIT FOR FIBER OPTIC CABLE FROM MANAGER'S OFFICE.
INSTALL 1 – #8 AWG COPPER GROUNDING ROD, PER EMB FACE, WITH A MINIMUM LENGTH OF 8'-0", BELOW GRADE, NEAR PYLON SIGN.
3 – 110 VOLT ELEC. CABLES:
1 LINE TO CABINET LIGHT FIXTURE
2 LINES TO ELECTRONIC MESSAGE BOARD

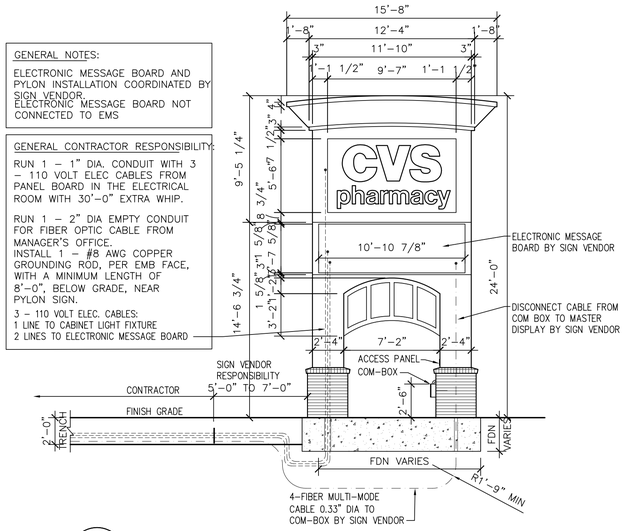

2 SE-1.1 PYLON SIGN
SCALE: 3/16"=1'-0"

NOTE: LIGHT POLE, BASE PLATE AND ANCHOR BOLTS SHALL BE DESIGNED AND PROVIDED BY THE LIGHT POLE MANUFACTURER. UPON REQUEST BY THE LOCAL BUILDING OFFICIAL, CALCULATIONS SHALL BE SUBMITTED BEARING THE SEAL AND SIGNATURE OF A PROFESSIONAL ENGINEER LICENSED IN THE STATE WHERE THE PROJECT IS BEING CONSTRUCTED, EMPLOYED BY THE LIGHT POLE MANUFACTURER.

NOTE:
SEE ELEC DWGS FOR ADDITIONAL INFORMATION AND LOCATION

NOTE:
CONTRACTOR TO SUPPLY FUSE AT BASE OF POLE AT HAND HOLE

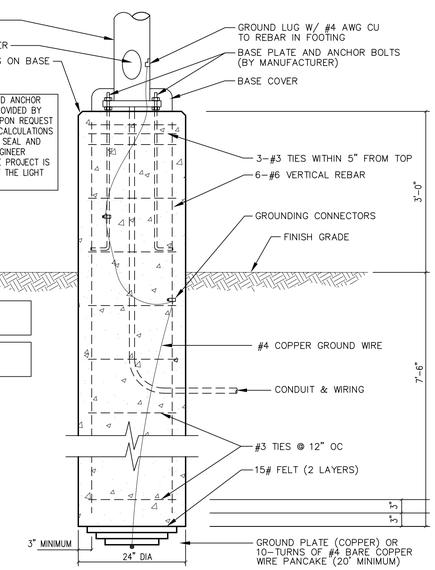

3 SE-1.1 SITE LIGHTING BASE DETAIL
SCALE: 3/4"=1'-0"

ELECTRICAL LEGEND NOTES (SHEET SE-1.1 ONLY):

1. DISCONNECT SWITCH PROVIDED WITH EQUIPMENT. VERIFY EXACT LOCATIONS WITH EQUIPMENT VENDOR PRIOR TO INSTALLATION.
2. PROVIDE 2 – 4" C. (WITH PULLWIRE) FROM TELEPHONE BACKBOARD TO PROPERTY LINE. COORDINATE EXACT TERMINATION LOCATION AND INSTALLATION REQUIREMENTS WITH LOCAL TELEPHONE COMPANY PRIOR TO ROUGH-IN.
3. PROVIDE 2#8 & 1#8G. – 1" C. THROUGHOUT CIRCUIT.
4. PROVIDE 2#6 & 1#6G. – 1" C. THROUGHOUT CIRCUIT.
5. COORDINATE ALL EXTERIOR WALL PACK LIGHT FIXTURE LOCATIONS WITH SHEET A-4.1 AND REFER SHEET E-1.1 FOR CIRCUIT INFORMATION.
6. PROVIDE 1 – 2" C FOR PYLON SIGN FIBER OPTIC CABLE ROUTED FROM PYLON SIGN TO MANAGER'S OFFICE, REFER TO 1/E-2.1 FOR CONDUIT LOCATION . PROVIDE 1 – 1" C FOR PYLON SIGN ELECTRIC MESSAGE BOARD ROUTED FROM PYLON SIGN TO ELECTRICAL ROOM. VERIFY EXACT TERMINATIONS WITH CVS MANAGEMENT PRIOR TO INSTALLATION. REFER TO DETAIL 2/SE-1.1
7. PROVIDE 2#10 & 1#10G. – 1" C. THROUGHOUT CIRCUIT.
8. DENOTES EXISTING S.C.E. MANHOLE. COORDINATE WITH SCE FOR THIS WORK.
9. PROVIDE 1 – 2" C FOR FOR FUTURE FIBER OPTIC CABLE ROUTED FROM SIGN TO MANAGER'S OFFICE, PROVIDE 1 – 1" C FOR FUTURE ELECTRIC MESSAGE BOARD ROUTED FROM SIGN TO PANEL "C". PROVIDE PULL CORD AND CAP OFF CONDUIT. VERIFY CONDUIT REQUIREMENT WITH CVS MANAGEMENT PRIOR TO ROUGH-IN.
10. DENOTES EXISTING S.C.E. POWER POLE. COORDINATE NEW SERVICE WORK WITH S.C.E. SERVICE PLANNER AS REQUIRED.
11. DENOTES NEW NEMA 3R ENCLOSED 800A SWITCHBOARD. VERIFY EXACT LOCATION AND REQUIREMENTS PRIOR TO ROUGH-IN.
12. PROVIDE (2) 4"C.O. PER POWER UTILITY CO. REQUIREMENTS. VERIFY ALL REQUIREMENTS AND LOCATIONS WITH POWER UTILITY CO. ENGINEERED DRAWINGS PRIOR TO ROUGH-IN.

NOTES

1. VERIFY ALL OVERHEAD AND UNDERGROUND UTILITIES PRIOR TO INSTALLATION OF LIGHT POLE BASES AND CONDUIT. REFER TO 3/SE-1.1 FOR LIGHT POLE DETAIL.
2. REFER TO DRAWING E-1.1 FOR ALL BUILDING MOUNTED EXTERIOR LIGHTING FIXTURES.

PYLON/MONUMENT SIGN TRENCHING

PROVIDE TRENCH AND APPROPRIATE ELECTRICAL POWER FROM SIGN TO TENANT'S ELECTRICAL PANEL. COORDINATE THIS WITH CIVIL LIGHTING PLAN AND TENANT SIGN SHOP DRAWINGS.

POWER UTILITY CONTACT	
COMPANY:	SCE
ADDRESS:	1000 POTRERO GRANDE DRIVE MONTEREY PARK, CA 91755
CONTACT:	REGINA GONZALES
PHONE NO.	(323) 720-5298

TELEPHONE UTILITY CONTACT	
COMPANY:	ATT
ADDRESS:	8633 GRAND AVE. ROSEMEAD, CA 91770-1220
CONTACT:	DENNIS TERRAZONE (DT2621@ATT.COM)
PHONE NO.	(626) 570-7633

RPM Engineers, Inc.
102 DISCOVERY
Irvine, Ca. 92618
Tel: 949-450-1229
Fax: 949-450-1454
Contact: Lan Nguyen ext. 203
e-mail: lann@rpmpe.com

18662 MacArthur Blvd. Ste.200
Irvine, California 92612
(949) 796-3838
www.rkaa.com
ROBERT KABLECK Architects And Associates, Inc.

REGISTERED PROFESSIONAL ENGINEER LAN V. NGUYEN No. 015596 Exp.12-31-2011 ELECTRICAL STATE OF CALIFORNIA

date:

COPYRIGHT ALL RIGHTS RESERVED. ROBERT KABLECK ARCHITECTS AND ASSOCIATES, INC. THIS DRAWING IS AN INSTRUMENT OF SERVICE, IT IS THE PROPERTY OF ROBERT KABLECK ARCHITECTS AND ASSOCIATES, INC. IT MAY NOT BE REPRODUCED OR REPRODUCTION CAN BE USED WITHOUT WRITTEN PERMISSION OF THE ARCHITECTS.

01/06/11	CHATTEL ARCH. SUBMITTAL
01/10/11	PLAN CHECK CORRECTIONS
01/27/11	CHATTEL ARCH. SUBMITTAL

NOTICE OF ALTERNATE BILLING OR PAYMENT CYCLE: THIS CONTRACT MAY ALLOW THE OPNER TO MAKE PAYMENT ONLY AFTER THE ENTIRE DEFINITION IS BILLED OTHERWISE THIRTY (30) DAYS. THIS CONTRACT MAY ALLOW THE CONTRACTOR TO BILL ONLY AFTER ALTERNATIVE BILLING AFTER CERTIFICATION AND APPROVAL OF BILLING AND ESTIMATES. THE ALTERNATIVE BILLING OR PAYMENT CYCLE AND/OR CYCLE APPLICABLE TO THIS PROJECT IS AVAILABLE FROM THE OPNER AT THE OFFICES OF:

OR HIS DESIGNATED AGENT SHALL PROVIDE THIS WRITTEN DESCRIPTION ON REQUEST.

DEVELOPER:
CHARLES COMPANY
9034 W. SUNSET BLVD.
WEST HOLLYWOOD
CA 90069
TEL (310) 247-0900
FAX (310) 247-1525

CVS pharmacy
STORE #49557
909 S. ATLANTIC BLVD
LOS ANGELES, CA

design RKA
drawn RKA
check RKA

sheet SE-1 of
job 09151

RPM# 10-282 01/27/11

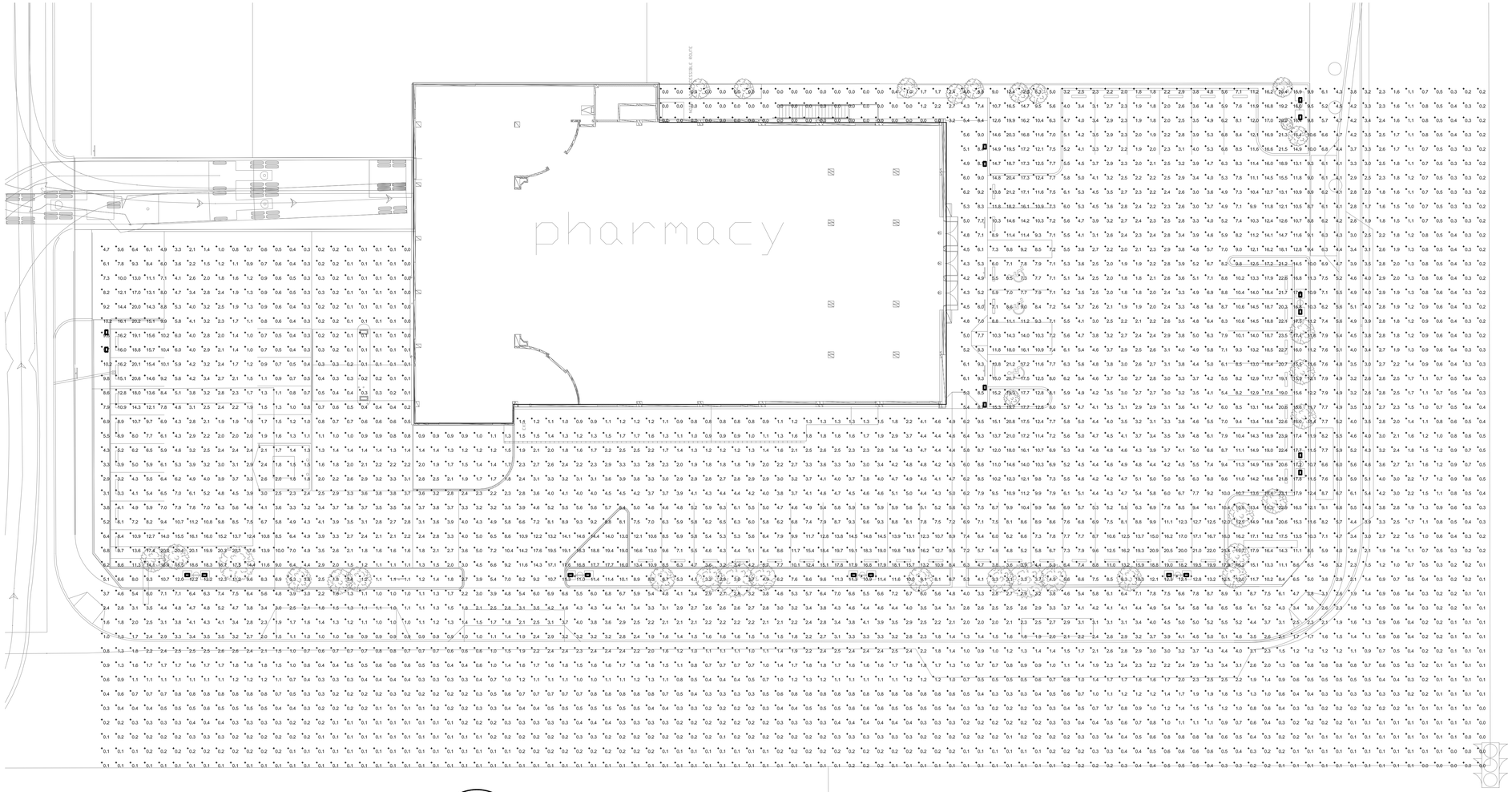

1 / SE-1.2 PHOTOMETRIC SITE PLAN

SCALE: 1/16"=1'-0"

LUMINAIRE SCHEDULE

Symbol	Label	Qty	Catalog Number	Description	Lamp	File	Lumens	LLF	Watts
	A	20	CR1-H40-H3-HS	CIMARRON RECTANGULAR AREA LIGHT TYPE III REFLECTOR CLEAR FLAT LENS, INTERNAL HOUSE SHIELD	400W CLEAR ED-28 METAL HALIDE, HORIZONTAL POSITION	cr1-h40-h3-hs.ies	32400	0.81	460

STATISTICS

Description	Symbol	Avg	Max	Min	Max/Min	Avg/Min
Calc Zone #1	+	4.2 fc	23.9 fc	0.0 fc	N / A	N / A

ROBERT KABICEK Architects And Associates, Inc.
18662 MacArthur Blvd. Ste.200
Irvine, California 92612
(949) 796-3838
www.rkaa.com

REGISTERED PROFESSIONAL ENGINEER
LAN V. NGUYEN
No. 015596
Exp.12-31-2011
ELECTRICAL
STATE OF CALIFORNIA

date:

COPYRIGHT ALL RIGHTS RESERVED. ROBERT KABICEK ARCHITECTS AND ASSOC. INC. THIS DRAWING IS AN INSTRUMENT OF SERVICE, IS THE PROPERTY OF ROBERT KABICEK ARCHITECTS AND ASSOC. INC. AND MAY NOT BE REPRODUCED OR REPRODUCTION MADE USE OF WITHOUT WRITTEN PERMISSION OF THE ARCHITECT.

01/06/11	CHATTEL ARCH. SUBMITTAL	
01/10/11	PLAN CHECK CORRECTIONS	
01/27/11	CHATTEL ARCH. SUBMITTAL	

NOTICE OF ALTERNATE BILLING OR PAYMENT CYCLE: THIS CONTRACT MAY ALLOW THE OWNER TO MAKE PAYMENTS OR BILL FOR WORK IN INTERVALS IN ELLIGIBLE CYCLES OTHER THAN THIRTY DAYS. THIS CONTRACT MAY ALLOW THE CONTRACTOR TO BILL FOR WORK IN ALTERNATIVE ELIGIBLE INTERVAL CERTIFICATION, PROVIDED THE OWNER HAS GIVEN WRITTEN WRITTEN DESCRIPTION OF SUCH OTHER BILLING AND/OR CYCLE APPLICABLE TO THE PROJECT IS AVAILABLE FROM THE OWNER AT THE OFFICES OF

OR HIS DESIGNATED AGENT SHALL PROVIDE THIS WRITTEN DESCRIPTION ON REQUEST

DEVELOPER:
CHARLES COMPANY
9034 W. SUNSET BLVD.
WEST HOLLYWOOD
CA 90069
TEL (310) 247-0900
FAX (310) 247-1525

CVS pharmacy
STORE #49557
909 S. ATLANTIC BLVD
LOS ANGELES, CA

design	RKA	check	RKA
drawn	RKA		

sheet SE-12 of

job 09151

RPM Engineers, Inc.
102 DISCOVERY
Irvine, Ca. 92618
Tel: 949-450-1229
Fax: 949-450-1454
Contact: Lan Nguyen ext. 203
e-mail: lann@rpmpe.com

RPM# 10-282 01/27/11

LOAD 1 HOT 120 VAC — LOAD 2 HOT 120 VAC

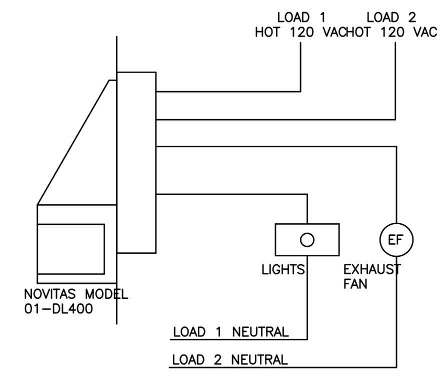

9 / E-1.1 EXHAUST FAN SWITCHING DETAIL

SCALE: NOT TO SCALE

LIGHTING FIXTURE SCHEDULE

ALL FIXTURES SHALL BE PURCHASED THROUGH: WIEDENBACH-BROWN CO. (888) 230-1569 (CVSSUPPORT@WBLIGHT.COM)

REFER TO ELECTRICAL SPECIFICATIONS FOR ADDITIONAL REQUIREMENTS WHICH MAY NOT NECESSARILY BE REFLECTED IN CATALOG NUMBER AND/OR DESCRIPTION IN THIS SCHEDULE. CONTRACTOR CAN SUPPLY EITHER PRIMARY OR ALTERNATE LIGHTING PACKAGE AS INDICATED UNDER THE MANUFACTURER COLUMN.

	SYMBOL	DESCRIPTION	MANUFACTURER 1.) DESIGNATES PRIMARY 2.) DESIGNATES ALTERNATE	MOUNTING	VOLT	VA	LAMPS	BALLASTS	REMARKS/NOTES
A		2X4 RECESSED PARABOLIC	LITHONIA/2ES8P 232 1/3 OS10ISX S835HT8 NACV	RECESSED	120	63	2-F032/835/XPS/ECO	1-QHE3X32ISN	LAMPS FACTORY INSTALLED.
A1		2X4 RECESSED EMERGENCY PARABOLIC	LITHONIA/2ES8P 232 1/3 OS10ISX S835HT8 NACV-EL14	RECESSED	120	63	2-F032/835/XPS/ECO	1-QHE3X32ISN-PS1400	LAMPS FACTORY INSTALLED. PROVIDE WITH AN EMERGENCY BATTERY PACK(LITHONIA #PS1400) - FIXTURE IS TO BE UNSWITCHED.
B		RECESSED WALL WASHER 4'	LITHONIA/WW G 2 32 IRLS OS10IS LPSM835EXS	RECESSED	120	63	2-F032/835/XPS/ECO	1-QHE3X32ISN	LAMPS FACTORY INSTALLED. COORDINATE LOCATION W/ INTERIOR GRAPHICS. REF. A-4.2
C		8' STRIP	1.)LITHONIA/TS 1 32 MVOLT OSI10XL 2.)METALUX/CVS-8TSN-132-120V-OSQHEISL	SURFACE AFF. 12'-0" MAX.	120	48	2-F032/835/XPS/ECO	1-QHE2X32T8/UNV ISL-SC	
C1		4' STRIP	1.)LITHONIA/C 2 32 MVOLT OSI10XL 2.)METALUX/CVS-SS-232-120-OSIQHEISL	SURFACE, CEILING	120	48	2-F032/835/XPS/ECO	1-QHE2X32T8/UNV ISL-SC	PROVIDE WIRE GUARD FOR FIXTURE WHEN LOCATED ABOVE VRC AND UNDER STAIRS
D		4' FLUORESCENT	1.)LITHONIA/MS8ST 3 32 SBL WD (OR APPROVED EQUAL)						
D1		8' FLUORESCENT	1.)LITHONIA/TMS8ST 2 32 SBL WD (OR APPROVED EQUAL)						SUBSCRIPT 'P' DENOTES PENDANT MOUNTED; 'S' DENOTES SURFACE MOUNTED.
E		SURFACE MOUNT EMERGENCY	1.)LITHONIA/ELM618 2.)SURELITES/CVS-CC4WH	SURFACE, WALL OR CEILING	120	9	INCLUDED WITH UNIT		CEILING MOUNTED IN RETAIL AREA ONLY.
E1		SURFACE MOUNT EMERGENCY	1.)LITHONIA/ELA W NX H0606 2.)SURELITES/CVS-6T6WWH	SURFACE, WALL	120	9	INCLUDED WITH UNIT		PROVIDE "LITHONIA #ELM618 R 0 TD" OR "COOPER #CC3WHSD0DSTDM" 6V REMOTE BATTERY PACK. BATTERY PACK TO BE MOUNTED IN CONCEALED SPACE.
MD1		13" PERIMETER FIXTURE	1.)SPECLIGHT/FPI B1 1CF24 120 ADPM LPS 835 NACV 2.)MERCURY/MM-1-24-BIAX-WELD-ELB-120V-PP	SURFACE	120	28	1-FT24DL/835	FULL ELECTRONIC	

	SYMBOL	DESCRIPTION	MANUFACTURER 1.) DESIGNATES PRIMARY 2.) DESIGNATES ALTERNATE	MOUNTING	VOLT	VA	LAMPS	BALLASTS	REMARKS/NOTES
MD2		2FT PERIMETER FIXTURE	1.)LITHONIA/SS 1 17 MVOLT OSI10XL 2.)MERCURY/STAG-1-17-OCT-SYL-QHEISL-120V	SURFACE	120	14	1-F017/835/XPS/ECO	1-QHE2X32T8/UNV ISL-SC	
MD3		3FT PERIMETER FIXTURE	1.)LITHONIA/SS 1 25 MVOLT OSI10XL 2.)MERCURY/STAG-1-25-OCT-SYL-QHEISL-120V-PP	SURFACE	120	20	1-F025/835/XPS/ECO	1-QHE2X32T8/UNV ISL-SC	
MD4		4FT PERIMETER FIXTURE	1.)LITHONIA/SS 1 32 MVOLT OSI10XL 2.)MERCURY/STAG-1-32-OCT-SYL-QHEISL-120V-PP	SURFACE	120	25	1-F032/835/XPS/ECO	1-QHE2X32T8/UNV ISL-SC	
MD8		8FT PERIMETER FIXTURE	1.)LITHONIA/TSS 1 32 MVOLT 1/4 OSI10XL 2.)MERCURY/STAG-1-32-OCT-/8T-SYL-QHEISL-120V	SURFACE	120	48	2-F032/835/XPS/ECO	1-QHE4X32T8/UNV ISL-SC	
MDT		TELESCOPING PERIMETER FIXTURE	LITHONIA/SST-2-32-MVOLT-OSI10XL	SURFACE	120	48	2-F032/835/XPS/ECO	1-QHE2X32T8/UNV ISL-SC	
OB		RECESSED SQUARE	SPECTRUM/SP12SQMH-ED17-70-EX-DHL-FW-BH27	RECESS	120	75	1-70W SYL #M70/PS/U		PULSE START BALLAST AND LAMP WITH DAMP LOCATION LABEL.
							1-50W SYL #M50/PS/U		
OC		RECESSED	SPECTRUM/SP10MH-ED17-50-EX-1020-CS-GL-BH27	RECESS	120	55			PULSE START BALLAST AND LAMP WITH DAMP LOCATION LABEL.
W2B		ADJUSTABLE WALPAK	1.)LITHONIA/WFL3 250M HPW TB DDB 2.)VISION/APK-250-M-6-BZ	SURFACE, WALL	120	295	1-250W SYL #M250/U		AIM DOWNWARD AT 0 DEGREES.
X		EXIT WITH EGRESS LIGHTING HEADS	1.)LITHONIA/LHQM S W 3 R 120/277 2.)SURELITES/CVS-UNH1SRWDHL	SURFACE, WALL OR CEILING	120	12.6	LED AND 2-9W INCANDESCENT, INCLUDE WITH UNIT		PROVIDE NUMBER OF FACES AND ARROWS AS INDICATED ON FLOOR PLANS. CEILING MOUNTED IN RETAIL AREA ONLY.

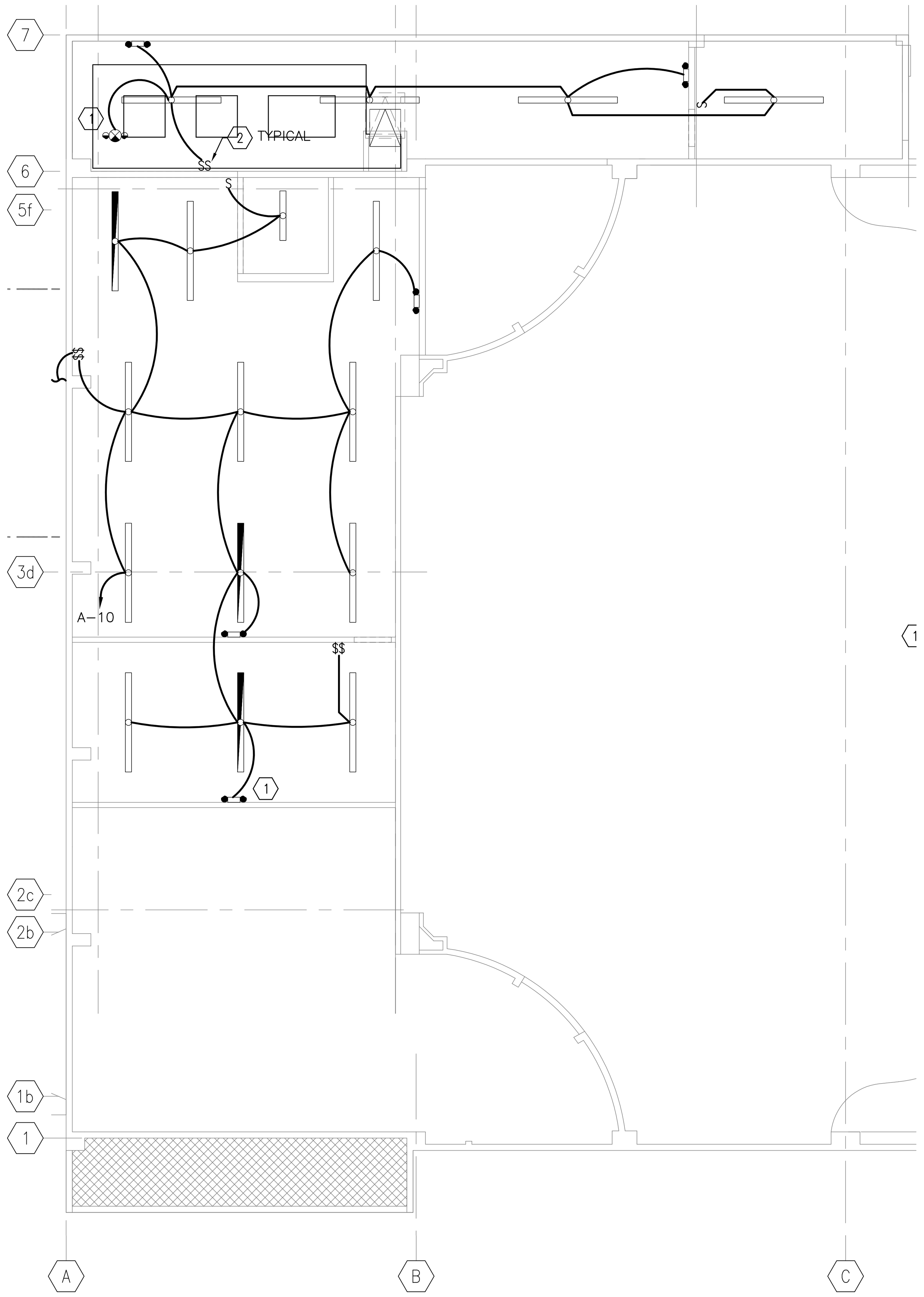

MEZZANINE ELECTRICAL LIGHTING PLAN

2 / E-1.1 SCALE: 1/8"=1'-0"

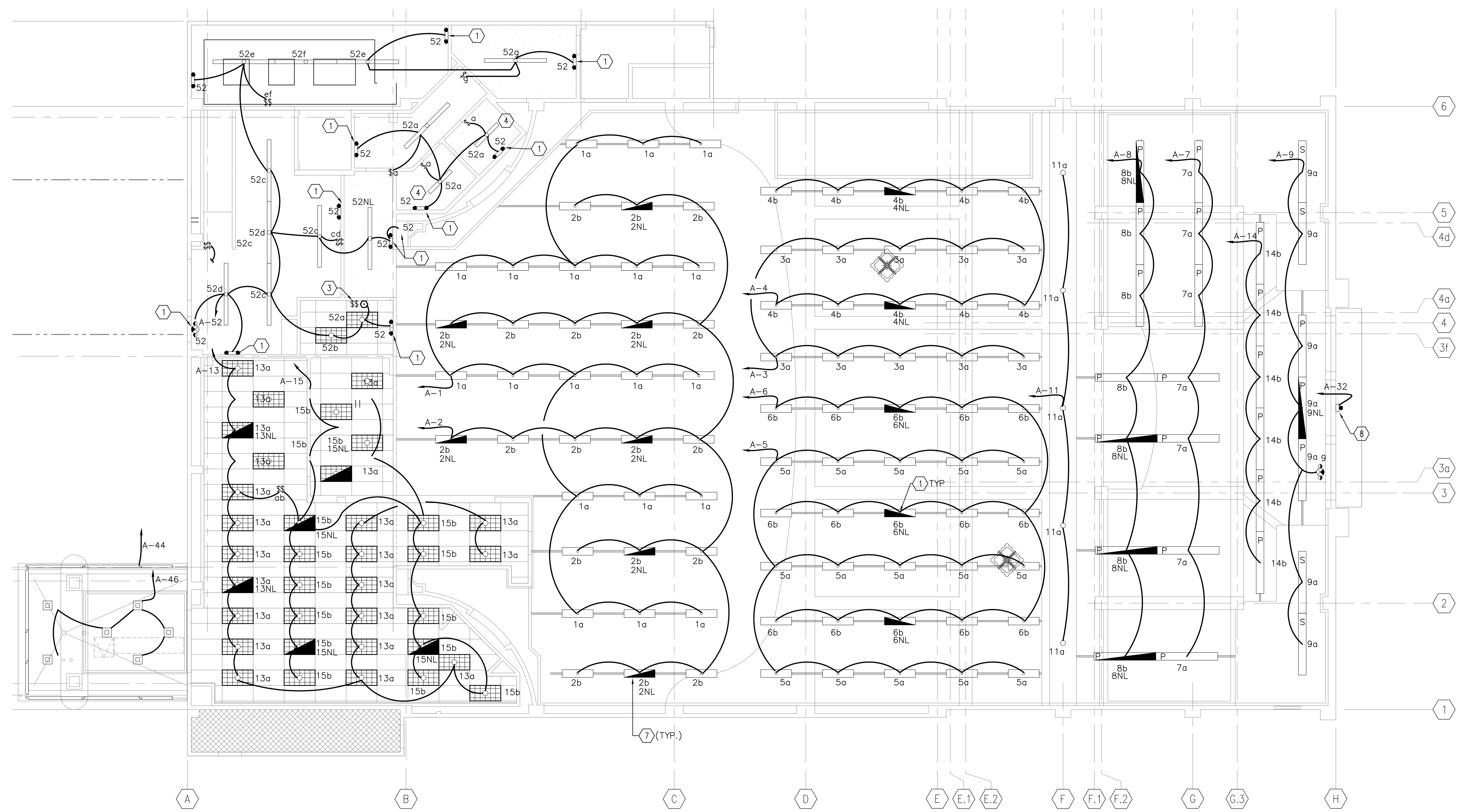

1st FLOOR ELECTRICAL LIGHTING PLAN

1 / E-1.1 SCALE: 1/8"=1'-0"

FIRE ALARM NOTES

FIRE ALARM SYSTEM TO BE INSTALLED BY CVS NATIONAL ACCOUNT VENDOR ASSIGNED TO THE CONSTRUCTION REGION.

FIRE SYSTEM DESIGN SHALL BE BASED ON FIRE AHJ AND CVS ASSET PROTECTION SERVICES (APS) SPECIFICATIONS.

FIRE ALARM ANNUNCIATOR TO BE MOUNTED 5'-0" AFF AT FRONT ENTRANCE DOOR NEAR BURGLAR ALARM KEYPAD.

COORDINATE CONDUIT LOCATIONS WITH CVS ALARM VENDOR PRIOR TO ROUGH-IN AND PROVIDE BACK BOX AND CONDUIT IN WALL TO THE CEILING.

HVAC CONTRACTOR TO SUPPLY DUCT SMOKE DETECTORS WITH VISUAL ANNUNCIATION, RESET SWITCH, AND NECESSARY RELAYS FOR FIRE SHUTDOWN INTERFACE, TO BE SUPPLIED BY HVAC CONTRACTOR AND BE CONNECTED TO FIRE ALARM CONTROL PANEL BY THE ALARM VENDOR.

WATER FLOW AND VALVE SUPERVISION SWITCHES TO BE SUPPLIED BY SPRINKLER CO. AND CONNECTED TO THE FIRE ALARM CONTROL PANEL BY THE ALARM VENDOR.

KEYNOTES

1. PROVIDE UNSWITCHED HOT WIRE TO NIGHT LIGHT AND EMERGENCY FIXTURE. CONNECT AHEAD OF ENERGY MANAGEMENT SYSTEM.
2. MOUNT SWITCH 42" A.F.F. TO CENTER OF SWITCH.
3. PROVIDE E.M.S. OVERRIDE SWITCH IN MANAGER'S OFFICE TO CONTROL CIRCUITS A-1, A-3, A-5, A-7 AND A-9. PROVIDE LABEL ABOVE SWITCH TO READ "EMS/OR".
4. CONTROL EXHAUST FAN WITH RESTROOM LIGHTS REFERENCE SWITCHING DIAGRAM 9 ON THIS SHEET.
5. PROVIDE CIRCUIT TO PILOT LIGHT SWITCH FOR INTERIOR VAPOR PROOF LAMPS. FIXTURES SHIPPED LOOSE TO BE INSTALLED BY CONTRACTOR.
6. COORDINATE ALL PARAWASH FIXTURE (TYPES 'B' AND 'B1') LOCATIONS WITH ARCHITECTURAL PLANS TO ENSURE FIXTURES ARE CENTERED ON WALL GRAPHICS.
7. PROVIDE UNSWITCHED HOT WIRE TO EMERGENCY FIXTURE BATTERY CHARGER VIA THE ASSIGNED CIRCUIT IN PANEL A. CONNECT SWITCHED (EMS) HOT WIRE CIRCUIT TO BOTH FIXTURE BALLASTS. EMERGENCY FIXTURE WILL OPERATE AS A SWITCHABLE UNIT WITH SEPARATE CIRCUIT FOR BATTERY CHARGER SO LAMPS CAN BE TURNED OFF WHILE CHARGER MAINTAINS BATTERY AT PROPER VOLTAGE. EMERGENCY LIGHTING WILL BE TURNED OFF BY THE EMS SYSTEM. IN THE EVENT OF A POWER OUTAGE, ALL EMERGENCY FIXTURES WILL BE ACTIVATED.
8. PROVIDE EMERGENCY EGRESS FIXTURE WITH TIME DELAY MONITOR WHEN CIRCUITED WITH A H.I.D. FIXTURE.

GENERAL NOTES

1. WIRE IN TANDEM ONE AND THREE LAMP FIXTURES, SURFACE MOUNTED IN CONTINUOUS ROWS OR RECESSED FIXTURE MOUNTED IN AN ACCESSIBLE CEILING AND WITH IN 10 FEET OF EACH OTHER.
2. CEILING MOUNT EXIT SIGNS AND EMERGENCY LIGHTING HEADS IN RETAIL AREA. ALL EXIT SIGNS WIRED AC/DC AND TOGETHER.
3. INSTALL HOLD DOWN CLIPS ON ALL 2x4 LAY-IN FIXTURE.
4. CUT AND POP RIVET CEILING GRID AS REQUIRED.
5. INSTALL PHOTOCELL ON WEST WALL TO ACTIVATE ALL EXTERIOR LIGHTS AND SIGNS.
6. ROUTE THE FOLLOWING CIRCUITS THROUGH THE ENERGY MANAGEMENT SYSTEM: A. ALL RETAIL AREA LIGHTING CIRCUITS. B. SIGNS AND EXTERIOR LIGHTING CIRCUITS. C. ALL LIGHTING CIRCUITS IN PHARMACY, D. PHOTOLAB, AND CHECKOUT AREAS.
7. PROVIDE #10AWG CONDUCTORS FOR HOME RUNS (INCLUDING GROUND) FOR THE FOLLOWING CIRCUITS: A-1, A-2, A-3, A-4, A-5, A-6, A-7, A-8, A-9, A-11, A-13, A-15, A-17, A-18, A-20, A-22, A-24, A-26, A-28, A-32, A-38, A-40, A-42 A-44, A-46, C-21, C-23, C-25, C-27, C-29, C-31, C-33 AND C-35.
8. COORDINATE ALL EXTERIOR WALL PACK LIGHT FIXTURE LOCATIONS WITH SHEET A-4.1.
9. REFER TO ARCHITECTURAL DRAWING A-3.1 FOR EXACT LIGHTING FIXTURE LOCATIONS, UNLESS OTHERWISE NOTED.
10. PROVIDE CONDUIT WITH PULL WIRE FOR ALL LOW VOLTAGE CIRCUITS.
11. WHEN USED, CORNICE PERIMETER LIGHT FIXTURE "MDT" TO BE INSTALLED LAST IN SERIES TO AVOID GAPS.

NOTE – PROVIDE EXIT AND EGRESS FIXTURES WITH BATTERY BACKUP FOR 90 MINUTES OF OPERATION.

RPM Engineers, Inc.
102 DISCOVERY
Irvine, Ca. 92618
Tel: 949-450-1229
Fax: 949-450-1454
Contact: Lan Nguyen ext. 203
e-mail: lann@rpmpe.com

ROBERT KUBICEK Architects And Associates, Inc.
18662 MacArthur Blvd. Ste.200
Irvine, California 92612
(949) 798-3838
www.rkaa.com

REGISTERED PROFESSIONAL ENGINEER LAN V. NGUYEN No. 015596 Exp. 12-31-2011 ELECTRICAL STATE OF CALIFORNIA

date:

COPYRIGHT , ALL RIGHTS RESERVED. ROBERT KUBICEK ARCHITECTS AND ASSOC, INC. THIS DRAWING IS AN INSTRUMENT OF SERVICE. IT IS THE PROPERTY OF ROBERT KUBICEK ARCHITECTS AND ASSOC, INC. AND MAY NOT BE REPRODUCED, OR REPRODUCTION HERE OF USED, WITHOUT WRITTEN PERMISSION OF THE ARCHITECT.

01/06/11	CHATTEL ARCH. SUBMITTAL
01/10/11	PLAN CHECK CORRECTIONS
01/27/11	CHATTEL ARCH. SUBMITTAL

NOTICE OF ALTERNATE BILLING OR PAYMENT CYCLE: THIS CONTRACT MAY ALLOW THE OWNER TO REQUIRE THE SUBMISSION OF BILLINGS OR ESTIMATES IN BILLING CYCLES OTHER THAN THIRTY DAYS. THIS CONTRACT MAY ALLOW THE OWNER TO MAKE PAYMENT ON SOME ALTERNATIVE SCHEDULE AFTER CERTIFICATION AND APPROVAL OF BILLING AND ESTIMATES. A WRITTEN DESCRIPTION OF SUCH OTHER BILLING AND/OR CYCLE APPLICABLE TO THE PROJECT IS AVAILABLE FROM THE OWNER AT THE OFFICES OF

OR HIS DESIGNATED AGENT SHALL PROVIDE THIS WRITTEN DESCRIPTION ON REQUEST

DEVELOPER:
CHARLES COMPANY
9034 W. SUNSET BLVD.
WEST HOLLYWOOD
CA 90069
TEL (310) 247-0900
FAX (310) 247-1525

CVS pharmacy
STORE #49557
909 S. ATLANTIC BLVD
LOS ANGELES, CA

design RKA
drawn RKA
check RKA

sheet E-1.1 of

job 09151

RPM# 10-282 01/27/11

ELECTRICAL LEGEND NOTES (RETAIL AREA):

- R1 PROVIDE CONDUIT AND PULL WIRE FROM 6" ABOVE CEILING TO DOUBLE GANG JUNCTION BOXES LOCATED 5'-0" AFF AT FRONT ENTRANCE DOOR AND AT PHARMACY. JUNCTION BOXES ARE FOR ALARM KEYPADS.
- R2 PROVIDE EDWARDS #340-4G5 24 VOLT ADAPTA-BELL AT 6" ABOVE CEILING AND CONNECT TO PUSHBUTTON AT RECEIVING AREA DOOR.
- R3 PROVIDE DEDICATED NEMA L14-20R (PUSH/TWIST TYPE) RECEPTACLE FOR FREEZER AT 8" AFF 20 AMP CIRCUIT WIRED DIRECTLY TO DISTRIBUTION PANEL. DO NOT CONNECT TO EMS. VERIFY EXACT LOCATION AND TYPE OF FREEZER WITH TENANT SHEET F-1 PRIOR TO ROUGH-IN AND INSTALLATION.
- R4 PROVIDE A STANDARD DUPLEX RECEPTACLE MOUNTED ON RETAIL SIDEWALLS 4" AFF RECEPTACLE TO BE USED FOR PLUG WHICH IS PROVIDED WITH SHELVING KICKPLATE. COORDINATE EXACT LOCATION WITH FINAL CVS MERCHANDISE PLAN (F-1).
- R5 PROVIDE DUPLEX RECEPTACLE ON BACK OF COLUMN (ON SIDE IF CONFLICT WITH MERCHANDISING FIXTURE RE: MERCHANDISE PLAN) AT 18" AFF PROVIDE LOW PROFILE SURFACE BOX (WITH NO KNOCKOUTS ON ANY OF THE VISIBLE SIDES).
- R6 PROVIDE DUPLEX RECEPTACLE FLUSH IN CEILING, CENTERED OVER HANGING SIGN. RUN THE ELECTRICAL CHORD THROUGH PLASTIC CHAIN COVER. COORDINATE WITH SIGN INSTALLER.
- R7 MAKE CONNECTION TO AUTOMATIC DOOR (DEDICATED CIRCUIT). WIRING/CONDUIT SHALL BE COMPLETELY CONCEALED, PROVIDE 90" FLEX WIP.
- R8 WHEN GONDOLA RUN CONCEALS BOTTOM OF COLUMN(S), RUN LINE IN CONDUIT AND WIRE MOLD TO BASE OF COLUMN WITH 4' WHIP TO INSTALL A DUPLEX RECEPTACLE IN GONDOLA KICKPLATE AT COLUMN LOCATIONS.
- R9 WIRE THERMOSTAT TO CONDENSING UNIT ON ROOFTOP PER COOLER MANUFACTURER'S WIRING DIAGRAM.
- R10 WIRE LIQUID LINE SOLENOID TO CONDENSING UNIT ON ROOFTOP PER COOLER MANUFACTURER'S WIRING DIAGRAM.
- R11 PROVIDE DUPLEX RECEPTACLE AT 80" AFF (MOUNTED SIDEWAYS) FOR LIGHTED FIXTURE HEADERS.
- R12 WIRE EVAPORATOR COILS TO THE COOLER CONTROL PANEL PER MANUFACTURER'S WIRING DIAGRAMS. RE: 5/E2.1
- R13 SEAL ALL CONDUIT PENETRATIONS WITH BOTH EXPANDING FOAM SEALANT AND SILICONE SEALANT IN COOLER FOR ENTRANCE AND CEILING LIGHTS PER MFR REQUIREMENTS.
- R14 PROVIDE 1-1"C FOR THE MUZAK SYSTEM AND 1-1 1/2"C FOR THE SATELLITE DISH SYSTEM (VSAT) ABOVE THE CEILING WITH PULL WIRE FROM PITCH POCKET TO WALL OF MANAGER'S OFFICE.
- R15 PROVIDE 3 - 1" C. WITH PULLWIRES. STUB UP UNDER CABINET AND AT 12" ABOVE SUSPENDED CEILING. PROVIDE 2 LOW VOLTAGE CONDUITS AND 1 POWER CONDUIT WITH TAGGED AND LABELED PULL WIRE.
- R16 PROVIDE 1" CONDUIT (WITH PULLWIRE) FROM INDICATED CHECKPOINT EAS PEDESTAL TO THE WALL AND UP TO 12" ABOVE THE CEILING LINE. PROVIDE AN ADDITIONAL 1" CONDUIT (WITH PULL WIRE) BETWEEN EACH EAS PEDESTAL. STUB-UP CONDUIT AND CUT FLUSH WITH FINISHED FLOOR. CHECKPOINT INSTALLATION TECHNICIAN TO MAKE ALL CONNECTIONS (24VDC AND CAT5) TO PEDESTALS. ROUTE CONDUIT UP DOOR ON SIDE INDICATED. RE: 3/E-3.2 FOR UNDERSLAB CONDUIT LAYOUT.
- R17 PROVIDE DEDICATED CIRCUIT FROM DISTRIBUTION PANEL FOR CHECKPOINT 110V POWER. PROVIDE A QUAD RECEPTACLE MOUNTED TO WALL 12" ABOVE CEILING SPACE. CHECKPOINT INSTALLATION TECHNICIAN WILL PROVIDE WIRING AND DIRECT CONNECTION FROM RECEPTACLE TO THE UNITS.
- R18 PROVIDE 6 - 1"C WITH PULLWIRES. STUB UP AT LOCATION SHOWN ON FLOOR PLAN AND AT 12" ABOVE SUSPENDED CEILING. PROVIDE 3 LOW VOLTAGE CONDUITS AND 3 POWER CONDUITS WITH TAGGED & LABELED PULLWIRE. RE: 3/E-2.1.
- R19 PROVIDE A DUPLEX RECEPTACLE NEAR THE CONDUIT STUB-UP UNDER THE FIXTURE BASE. STUB UP 1/2" C WITH PULLWIRE AT LOCATION SHOWN ON FLOOR PLAN.
- R20 PROVIDE & INSTALL GFI TOP RAIL OUTLET AS MANUF BY GONDOLA SUPPLIER. CONCEAL ALL WIRING FROM OUTLET TO WIRING CHASE WITHIN GONDOLA.
- R21 PROVIDE JUNCTION BOX FOR ANTI-SWEAT CONTROL MODULATOR / DOOR HEATER.
- R22 PROVIDE JUNCTION BOX ABOVE CEILING WITH 6'-0" FLEX WIP TO AUTOMATIC DOOR FOR ALARM VENDOR. CONDUIT SHALL BE COMPLETELY CONCEALED W/ PULLWIRE.
- R23 PROVIDE DUPLEX RECEPTACLES FOR FAST LANE MERCHANDISE (FLM). PROVIDE WIRING CHASE AS MANUF BY WEIDENBACH-BROWN W/ ALL COMPONENTS FOR A COMPLETE AND STATIONARY INSTALLATION. WIRING CHASES TO BE FLUSH MOUNTED TO TOP OF GONDOLA RE: 11/E-2.1. COORDINATE EXACT LOCATION WITH FINAL CVS MERCHANDISE PLAN (F-1).
- R24 ECC W/ DUPLEX AND DATA/PHONE LINE MOUNTED ON FIXTURE. PROVIDE WIRING CHASE AS MANUF BY WEIDENBACH-BROWN W/ ALL COMPONENTS FOR A COMPLETE AND STATIONARY INSTALLATION. WIRING CHASES TO BE FLUSH MOUNTED TO TOP OF GONDOLA RE: 11/E-2.1. RE: FINAL CVS MERCHANDISE PLAN (F-1) FOR LOCATION.
- R25 PROVIDE FLUSH MOUNTED DUPLEX RECEPTACLE IN CEILING FOR TRANSOM SIGN.
- R26 PROVIDE FLUSH MOUNTED DUPLEX RECEPTACLE IN CEILING FOR SECURITY TV MONITOR, VERIFY IF REQUIRED.
- R27 PROVIDE WIRING CHASE AS MANUF BY WEIDENBACH-BROWN W/ ALL COMPONENTS FOR A COMPLETE AND STATIONARY INSTALLATION. WIRING CHASES TO BE FLUSH MOUNTED TO TOP OF GONDOLA RE: 11/E-2.1. PROVIDE JUNCTION BOX 6" ABOVE CEILING FOR WIRING CHASE CONNECTION.
- R28 ESS. OF BEAUTY DUPLEX. CONNCEAL ALL WIRING FROM OUTLET TO WIRING CHASE WITHIN GONDOLA.
- R29 PROVIDE DUPLEX RECEPTACLE AT 80" AFF (MOUNTED SIDEWAYS) FOR LIGHTED SHELVES.
- R30 PROVIDE DUPLEX RECEPTACLE & DATA OUTLET MOUNTED FLUSH IN END OF CHECKOUT COUNTER FOR ATM. CIRCUIT AS INDICATED WITH 2#12, #12G, 1/2"C.
- R31 PROVIDE FLUSH MOUNTED DUPLEX RECEPTACLE IN CEILING, EQUALLY SPACED IN WINDOW (MAX SPACING 12'-0" OC).
- R32 PROVIDE DUPLEX RECEPTACLE MOUNTED FLUSH IN END OF CHECKOUT COUNTER FOR FAST LANE MERCHANDISE (FLM). CIRCUIT AS INDICATED WITH 2#12, #12G, 1/2"C.
- R33 PROVIDE DUPLEX RECEPTACLE FOR MOTORIZED SHOPPING CART, AS REQUIRED.
- R34 PROVIDE 1" CONDUIT CONCEALED WITHIN WALL WITH PULL WIRE FOR SECURITY CABLES RE: 3/E-1.2. RUN CONDUIT FROM SPECIFIED LOCATION TO 6" ABOVE CEILING.
- R35 PROVIDE DUPLEX RECEPTACLE FOR ICE MERCHANDISER AT 8" AFF 20 AMP CIRCUIT WIRED DIRECTLY TO DISTRIBUTION PANEL. DO NOT CONNECT TO EMS. VERIFY EXACT LOCATION AND TYPE OF ICE MERCHANDISER WITH TENANT SHEET F-1 PRIOR TO ROUGH-IN AND INSTALLATION.
- R36 PROVIDE JUNCTION BOX FOR WALK-IN COOLER REMOTE TEMP SENSOR AT 5'-6" AFF WITH 1 - 3/4" CONDUIT FROM JUNCTION BOX TO 6" ABOVE FINISHED CEILING. RE: ARCH FOR LOCATION.
- R37 MOUNT PRICE CHECKER, DUPLEX 2'-10" AFF ON COLUMN. (MOUNTED SIDEWAYS)
- R38 PROVIDE 30AS/3P DISC.
- R39 PROVIDE 20A/1P
- R40 PROVIDE 30AS/15AF/2P
- R41 PROVIDE 60AS/60AF/3P

ELECTRICAL LEGEND NOTES (MISCELLANEOUS):

- M1 WEATHERPROOF DUPLEX GFCI RECEPTACLE PROVIDED WITH ROOF TOP HVAC UNIT. CIRCUIT TO B-1 WITH 2#10, 1#10G, 3/4"C.
- M2 SIGN CIRCUITS WILL BE 120V, 20 AMP. PROVIDE CONDUIT, JUNCTION BOXES AND WIRING FROM DISTRIBUTION PANEL TO BEHIND CANOPY FASCIA FOR BUILDING SIGNS. CHANNEL LETTERS AND SEAL TIGHT FLEXIBLE WHIPS FROM LETTERS TO BE SUPPLIED AND INSTALLED BY SIGN CONTRACTOR. ALL JUNCTION BOXES, CONDUIT, WIRING AND FINAL CONNECTIONS BETWEEN LETTERS BY THE SIGN CONTRACTOR. PROVIDE DISCONNECT MEANS FOR ALL SIGNAGE ON THESE PLANS (TYPICAL). COORDINATE WITH SIGN CONTRACTOR. RE: SHEET A-4.1. PROVIDE LOCKABLE DISCONNECT AT PANEL PER N.E.C. ART. 600 FOR EACH CIRCUIT. ⚠1
- M4 DISCONNECT SWITCH SCHEDULED AND SIZED INTEGRAL WITH ROOF TOP UNIT. REFERENCE MECHANICAL EQUIPMENT ELECTRICAL CONNECTION SCHEDULE ON SHEET E-3.1.

ELECTRICAL LEGEND NOTES (RECEIVING AREA):

- P17 PROVIDE JUNCTION BOX AND CONDUIT FOR VERTICAL LIFT PUSHBUTTON STATION COORDINATE WITH EQUIPMENT INSTALLER PRIOR TO ANY WORK.
- P18 PROVIDE JUNCTION BOX AND CONDUIT FOR VERTICAL LIFT MOTOR CONTROL BOX COORDINATE WITH EQUIPMENT INSTALLER PRIOR TO ANY WORK.
- P19 PROVIDE 30A/3P FUSED DISCONNECT SWITCH WITHING 5'-0" & LINE OF SIGHT OF CONTROLS, CONNECT TO VERTICAL LIFT (208V/3P, 5 HP). COORDINATE EXACT LOCATION AND ELECTRICAL REQUIREMENTS WITH EQUIPMENT INSTALLER PRIOR TO ANY WORK. ALL OUTLETS WITHIN 6'-0" MUST BE GFI.

ALL ELECTRICAL EQUIPMENT SHALL BE LISTED BY UL. OR A COUNTY APPROVED THIRD PARTY TESTING FACILITY (PER SECTION 110.3(B))

GENERAL NOTES (SHEET E-1.2 ONLY):

1. RE: CIVIL UTILITY PLAN FOR UTILITY INFORMATION.
2. ROUTE THE FOLLOWING CIRCUITS THROUGH THE ENERGY MANAGEMENT SYSTEM:
   A. CEILING RECEPTACLES
   B. WATER HEATERS
   C. LIGHTED FIXTURE VALENCES
3. RE: SHEET E-3.1 FOR MECHANICAL EQUIPMENT ELECTRICAL CONNECTION SCHEDULE. MECHANICAL EQUIPMENT INDICATED BY SYMBOL NOTE "(X)".
4. FOLLOW TENANT PANEL SCHEDULE.
5. PROVIDE EMPTY CONDUITS WITH PULLWIRES AND TAG PROPERLY.
6. TIE BACK ALL LOOSE WIRING (INCLUDING LOW VOLTAGE) IN AN ORDERLY FASHION.
7. DO NOT RUN LOW VOLTAGE WIRE OVER AC VOLTAGE WIRING OR LIGHT FIXTURES.
8. PROPERLY CONCEAL WIRING AT THE CHECKOUTS.
9. ROUTE CONDUITS SERVING COOLER BOXES ON THE INSIDE SURFACE OF BOX. KEEP CONDUIT PENETRATIONS THRU COOLER BOXES TO A MINIMUM. SEAL ALL PENETRATIONS USING SILICONE CAULK OR AN EXPANDING FOAM.
10. PROVIDE OUTDOOR ENCLOSURES NEMA RATED FOR THE LOCATION.
11. PROVIDE CONDUIT FOR ALL WIRING, INCLUDING BUT NOT LIMITED TO CONTROL, FIRE ALARM, POWER AND COMMUNICATIONS WIRING. COORDINATE INSTALLATION AND ROUTING REQUIREMENTS WITH APPROPRIATE INSTALLER(S).
12. PROVIDE SINGLE GANG PLASTER FLANGES FOR ALL TELEPHONE AND DATA OUTLET LOCATIONS AT SPECIFIED HEIGHT.

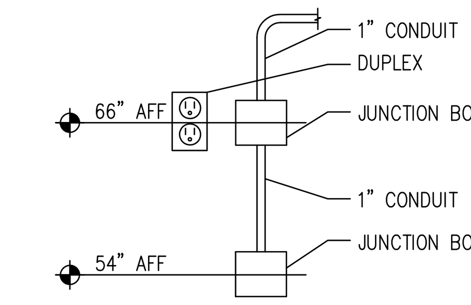

2 / E-1.2 OUTLET DETAIL
SCALE: NOT TO SCALE

EXAMINE MECHANICAL AND PLUMBING DRAWINGS WHICH FORM A PART OF THE CONTRACT DOCUMENTS. PROVIDE AND INSTALL ALL MATERIALS, DEVICE, WIRING, ETC. INDICATED THERON AS BEING A PART OF THE ELECTRICAL WORK. NO CHANGE ORDERS WILL BE ALLOWED FOR ADDITIONAL ELECTRICAL EQUIPMENT, ETC. IF THE EQUIPMENT IS INDICATED ON THE MECHANICAL AND PLUMBING DRAWINGS. DO NOT ROUGH IN ANY HVAC/PLUMBING ELECTRICAL WORK WITHOUT VERIFICATION OF THE UNITS EXACT LOCATION. THIS CONDITION MUST BE MET PRIOR TO BID (AND ALSO INCORPORATED INTO) AND CONSTRUCTION. NO EXCEPTIONS.

SYMBOL LEGEND

MOUNTING HEIGHT IS FROM FINISHED FLOOR TO CENTERLINE OF DEVICE OR RECEPTACLE. HEIGHT MAY VARY TO COINCIDE WITH BUILDING CONSTRUCTION.

SYMBOL	DESCRIPTION	MOUNTING HEIGHT
	DUPLEX RECEPTACLE	18" AFF
	QUAD RECEPTACLE	18" AFF
	DUPLEX RECEPTACLE WITH ISOLATED GROUND	18" AFF
	GROUND FAULT CURRENT INTERRUPTER TYPE RECEPTACLE	
	SPECIAL RECEPTACLE AS NOTED	
	QUAD RECEPTACLE WITH ISOLATED GROUND	
	ABOVE CEILING DUPLEX RECEPTACLE	
J	JUNCTION BOX W/COVERPLATE - CEILING MOUNTED	
-J	JUNCTION BOX W/COVERPLATE - WALL MOUNTED	
	PANELBOARD 120/208V	
	DISCONNECT SWITCH - HORSEPOWER RATED	
	PUSHBUTTON	5' AFF
◀ A	2 FLUSH MOUNTED SINGLE GANG REDUCING RINGS. PROVIDE 1 - 1" CONDUIT (WITH PULLWIRE) IN WALL TO BOTTOM OF JOIST. RE: 2/E-1.2	54" AFF 66" AFF
◀ B	FLUSH MOUNTED SINGLE GANG REDUCING RING. PROVIDE 1 - 1" CONDUIT (WITH PULLWIRE) IN WALL TO 6" ABOVE CEILING.	60" AFF
◀	DATA/PHONE LINE	
B	DOOR BUZZER	
NEUTRAL, HOTS, ISOLATED GROUND	CONDUIT CONCEALED IN WALL OR ABOVE CEILING. NOTE: A GREEN INSULATED EQUIPMENT GROUND SIZED PER N.E.C. IS NOT SHOWN BUT IS TO BE PROVIDED IN ALL RACEWAYS.	
	CONDUIT CONCEALED IN SLAB-IN GROUND OR UNDER FLOOR	
———	CONDUIT EXPOSED	
AFF	ABOVE FINISHED FLOOR	
A.F.G.	ABOVE FINISHED GRADE	
FACP	FIRE ALARM CONTROL PANEL	
S	S.P.S.T. LIGHT SWITCH	48" AFF UON
S_P	S.P.S.T. LIGHT SWITCH WITH PILOT LIGHT	48" AFF UON
S_{ST}	60 MINUTE TIMER SWITCH (MARKTIME #90008)	48" AFF UON
S_S	OCCUPANCY SENSOR (NOVITAS #01-DL400)	48" AFF UON

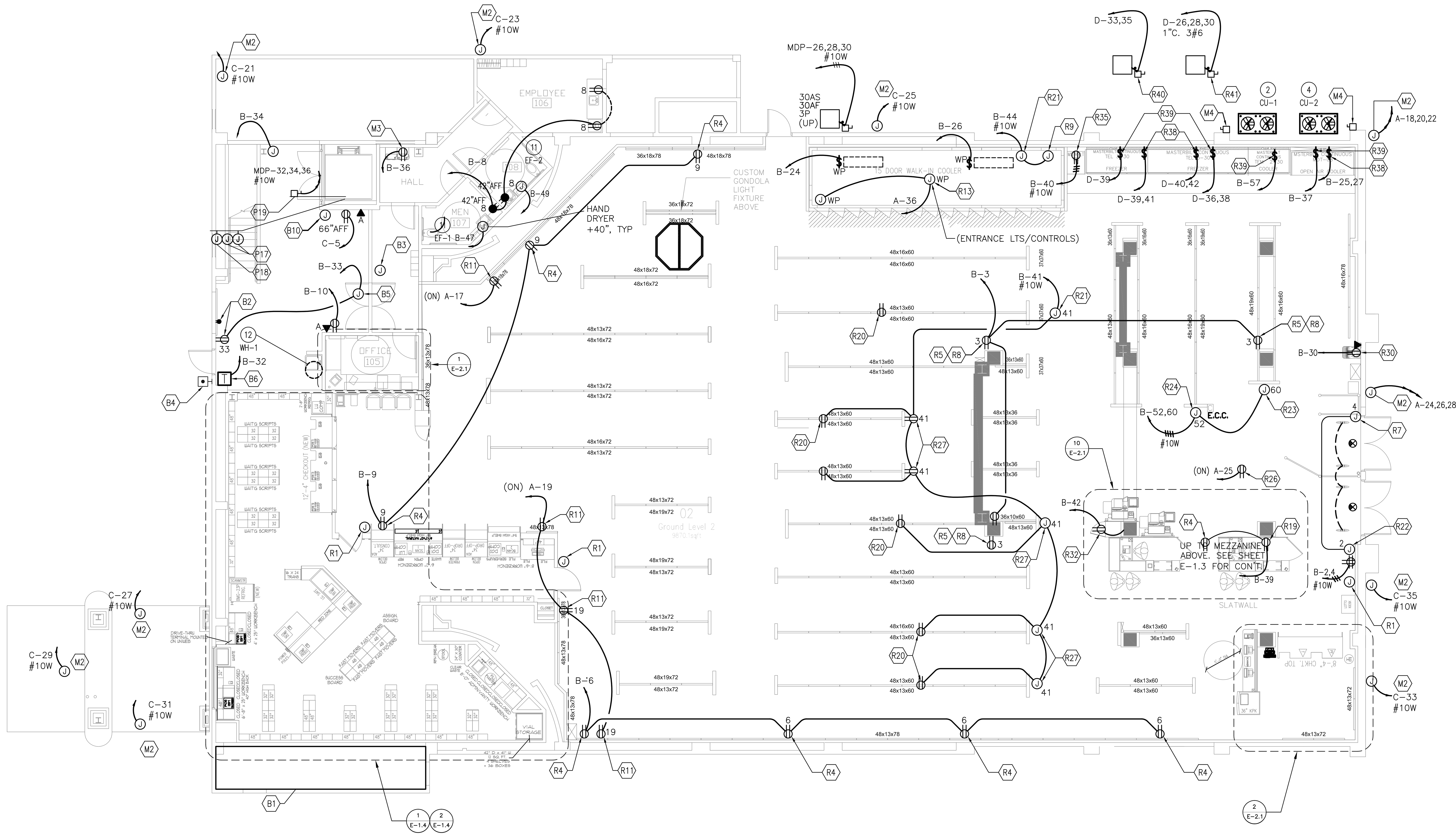

1st FLOOR
ELECTRICAL POWER PLAN

1 / E-1.1
SCALE: 1/8"=1'-0"

ROBERT KUBICEK Architects And Associates, Inc.
18662 MacArthur Blvd. Ste.200
Irvine, California 92612
(949) 798-3838
www.rkaa.com

REGISTERED PROFESSIONAL ENGINEER
LAN V. NGUYEN
No. 015596
Exp.12-31-2011
ELECTRICAL
STATE OF CALIFORNIA

date:

COPYRIGHT , ALL RIGHTS RESERVED. ROBERT KUBICEK ARCHITECTS AND ASSOC, INC. THIS DRAWING IS AN INSTRUMENT OF SERVICE. IT IS THE PROPERTY OF ROBERT KUBICEK ARCHITECTS AND ASSOC, INC. AND MAY NOT BE REPRODUCED, OR REPRODUCTION HERE OF USED, WITHOUT WRITTEN PERMISSION OF THE ARCHITECT.

	01/06/11	CHATTEL ARCH. SUBMITTAL
1	01/10/11	PLAN CHECK CORRECTIONS
	01/27/11	CHATTEL ARCH. SUBMITTAL

NOTICE OF ALTERNATE BILLING OR PAYMENT CYCLE: THIS CONTRACT MAY ALLOW THE OWNER TO REQUIRE THE SUBMISSION OF BILLINGS OR ESTIMATES IN BILLING CYCLES OTHER THAN THIRTY DAYS. THIS CONTRACT MAY ALLOW THE OWNER TO MAKE PAYMENT ON SOME ALTERNATIVE SCHEDULE AFTER CERTIFICATION AND APPROVAL OF BILLING AND ESTIMATES. A WRITTEN DESCRIPTION OF SUCH OTHER BILLING AND/OR CYCLE APPLICABLE TO THE PROJECT IS AVAILABLE FROM THE OWNER AT THE OFFICES OF OR HIS DESIGNATED AGENT SHALL PROVIDE THIS WRITTEN DESCRIPTION ON REQUEST

DEVELOPER:
CHARLES COMPANY
9034 W. SUNSET BLVD.
WEST HOLLYWOOD
CA 90069
TEL (310) 247-0900
FAX (310) 247-1525

CVS pharmacy
STORE #49557
909 S. ATLANTIC BLVD
LOS ANGELES, CA

design RKA
drawn RKA
check RKA

sheet E-1.2
of
job 09151

RPM Engineers, Inc.
102 DISCOVERY
Irvine, Ca. 92618
Tel: 949-450-1229
Fax: 949-450-1454
Contact: Lan Nguyen ext. 203
e-mail: lann@rpmpe.com

RPM# 10-282 01/27/11

ELECTRICAL LEGEND NOTES (MISCELLANEOUS):

M1 WEATHERPROOF DUPLEX GFCI RECEPTACLE PROVIDED WITH ROOF TOP HVAC UNIT.

M4 DISCONNECT SWITCH SCHEDULED AND SIZED INTEGRAL WITH ROOF TOP UNIT. REFERENCE MECHANICAL EQUIPMENT ELECTRICAL CONNECTION SCHEDULE ON SHEET E-3.1.

ELECTRICAL LEGEND NOTES:

Z1 MAKE CONNECTION TO E.M.S. RECEPTACLE.

Z2 PROVIDE DEDICATED ISOLATED DUPLEX RECEPTACLE AND TELEPHONE JACK AT TELEPHONE BACKBOARD FOR ALARM SYSTEM.

Z3 PROVIDE DEDICATED QUADRAPLEX RECEPTACLE AT TELEPHONE BACKBOARD FOR EXECUTONE TELEPHONE SYSTEM.

Z4 FLUSH MOUNT JUNCTION BOX AT 60" AFF. PROVIDE 1 – 1" C. (WITH PULLWIRE) IN WALL TO BOTTOM OF JOIST.

Z5 LOW VOLTAGE WIRING CABINET TO BE MOUNTED 48" AFF NEAR TELEPHONE D-MARC.

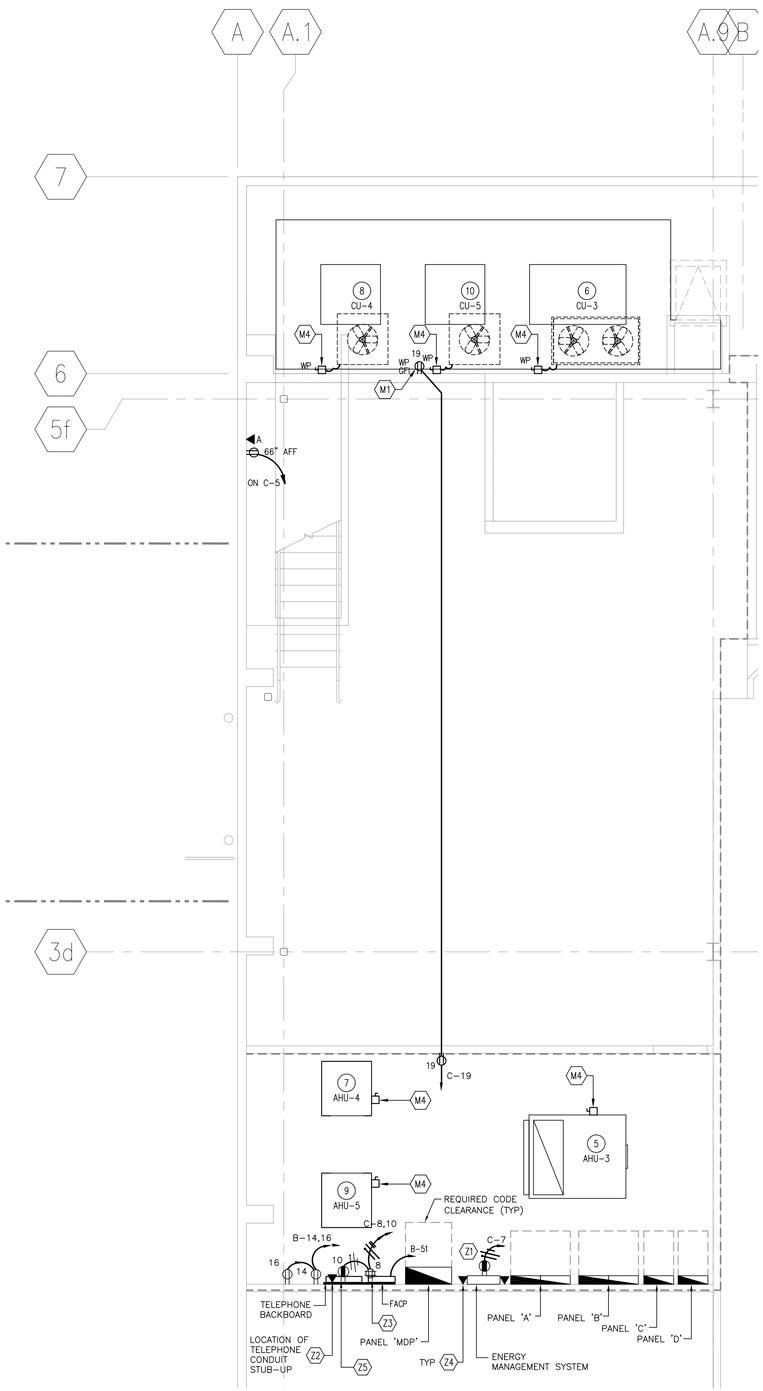

2 E-1.3 MEZZANINE ELECTRICAL POWER PLAN

SCALE: 1/4"=1'-0"

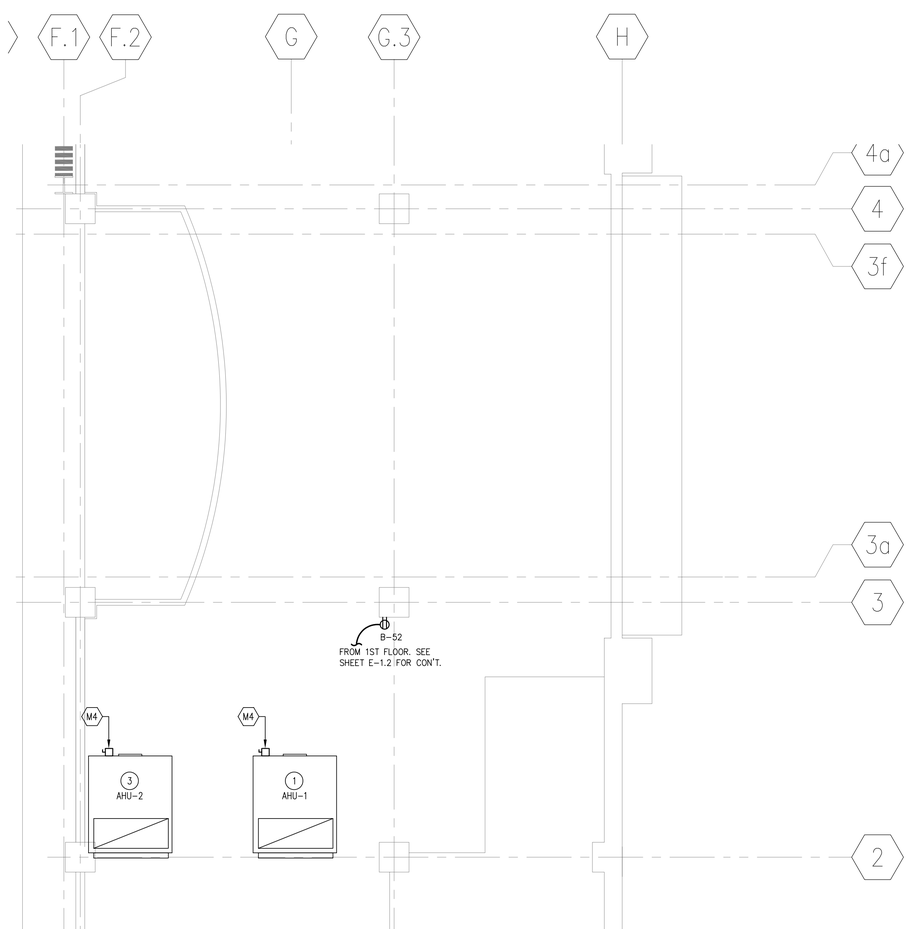

1 E-1.3 MEZZANINE ELECTRICAL POWER PLAN

SCALE: 1/4"=1'-0"

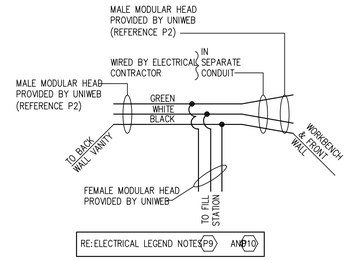

4 E-1.3 WIRING DETAIL

SCALE: NTS

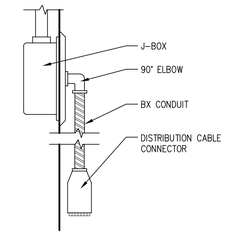

5 E-1.3 MILLWORK ELEC DETAIL

SCALE: NTS

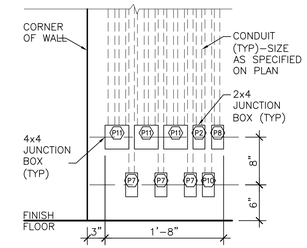

6 E-1.3 JUNCTION BOX ELEVATION

SCALE: 1" = 1'-0"

UNIWEB, INC.
222 S. Promenade Ave.
Corona, CA. 92879
PH: (951) 279-7999
FAX: (951) 279-8986

"In accordance with the applicable section of the following codes:

NATIONAL ELECTRICAL CODE, ADOPTED EDITION.

See manufacturer's installation instructions for components comprising the kit and assembly details."

Prefabricated Modular Room For Indoor Use Only.
Factory Provided Wiring–Prefabricated Manufactured Wiring System.

Features Subject To Inspection By Local Inspection Authority:

A. Installation of electrical wiring system, including all electrical devices and components.
B. Connections to branch circuit(s).
C. Properly sized branch circuit(s).
D. Number of receptacles on branch circuit(s).
E. System grounding.
F. Ground-Fault Circuit Interrupter and overload device protection.

SYMBOL LEGEND

(PRE-WIRED FIXTURES ONLY)

B	BLANK
▽	DATA/COMMUNICATION (LOGISTICS)
#	QUAD POWER BOX
C	CLEAN (ISOLATED)
CR	CLEAN RED (ISOLATED)
D	DIRTY (REGULAR)
J#	UPS CIRCUIT
REF	REFRIGERATOR DIRTY (REGULAR)
PT	PASS-THRU BOX
U	UPS ASSEMBLY (UNIWEB WIRING)

OUTLETS IN THIS PLAN COME INSTALLED IN FIXTURES AND ARE SHOWN FOR COORDINATION PURPOSES ONLY. DO NOT INCLUDE IN BID.

CONTRACTOR RESPONSIBLE FOR "PLUGGING" ALL FIXTURE SECTIONS TOGETHER.

MODULAR WIRING CONNECTORS COLOR LEGEND

ORANGE – ISOLATED GROUND
PURPLE – CONTROL POWER
CLEAR – GENERAL PURPOSE

RPM Engineers, Inc.
102 DISCOVERY
Irvine, Ca. 92618
Tel: 949-450-1229
Fax: 949-450-1454
Contact: Lan Nguyen ext. 203
e-mail: lann@rpmpe.com

ROBERT KABICEK Architects And Associates, Inc.
18662 MacArthur Blvd. Ste.200
Irvine, California 92612
(949) 798-3838
www.rkaa.com

REGISTERED PROFESSIONAL ENGINEER LAN V. NGUYEN No. 015596 Exp.12-31-2011 ELECTRICAL STATE OF CALIFORNIA

date:

COPYRIGHT ALL RIGHTS RESERVED. ROBERT KABICEK ARCHITECTS AND ASSOC., INC. THIS DRAWING IS AN INSTRUMENT OF SERVICE IT IS THE PROPERTY OF ROBERT KABICEK ARCHITECTS AND ASSOC. INC. AND MAY NOT BE REPRODUCED OR REPRODUCTION MAY BE USED WITHOUT WRITTEN PERMISSION OF THE ARCHITECT.

01/06/11 CHATTEL ARCH. SUBMITTAL
01/10/11 PLAN CHECK CORRECTIONS
01/27/11 CHATTEL ARCH. SUBMITTAL

NOTICE OF ALTERNATE BILLING OR PAYMENT TO ELECTRIC COMPANY: ALL ON-SITE POWER PLANTS, INCLUDING BUT NOT LIMITED TO, GENERATORS & BILLING CYCLES OTHER THAN THE ELECTRIC COMPANY'S STANDARD BILLING CYCLES TO HAVE PRIOR APPROVAL OF THE ELECTRIC COMPANY. ALL ALTERNATE BILLING AND APPROVALS OF BILLING AND DISTRIBUTION WRITTEN DESCRIPTION OF SUCH OTHER BILLING ARRANGEMENTS MUST BE SUBMITTED TO THE ENGINEER IN AVAILABLE FORM FOR ORDER AT THE OFFICES OF

OR HIS DESIGNATED AGENT SHALL PROVIDE THIS WRITTEN DESCRIPTION ON REQUEST

DEVELOPER:
CHARLES COMPANY
9034 W. SUNSET BLVD.
WEST HOLLYWOOD
CA 90069
TEL (310) 247-0900
FAX (310) 247-1525

CVS pharmacy
STORE #49557
909 S. ATLANTIC BLVD
LOS ANGELES, CA

design RKA
drawn RKA
check RKA

sheet E-1.3 of
job 09151

RPM# 10-282 01/27/11

ELECTRICAL LEGEND NOTES (POWER PLAN):

- P1 PROVIDE JUNCTION BOX MOUNTED ABOVE CEILING WITH FEEDER ADAPTER FOR CONNECTION TO CENTER ISLAND WIRING CHASE.
- P2 PROVIDE JUNCTION BOX MOUNTED AT 9" AFF (UON) WITH AN ORANGE DISTRUBUTION CABLE CONNECTOR FOR CONNECTION TO VENDOR PROVIDED CABINETS. RE: 5/E-1.3.
- P3 PROVIDE (2) DUPLEX OUTLET STACKED, ONE AT 1'-3" AFF AND ONE 1'-8" AFF FOR 816 PBX INTERFACE BOX.
- P4 PROVIDE JUNCTION BOX MOUNTED ABOVE CEILING WITH FEEDER ADAPTER FOR CONNECTION TO PILL COUNTER WIRING CHASE.
- P5 PROVIDE JUNCTION BOX ABOVE CEILING FOR CONNECTION TO ROLL-UP DOOR. COORDINATE WITH EQUIPMENT AND WIRE CONTROLS COMPLETE.
- P6 MOUNT ROLL-UP DOOR CONTROLS 48" AFF AND WIRE COMPLETE. PROVIDE THREE SWITCHES, ONE FOR EACH ELECTRIC ROLL-UP DOOR.
- P7 PROVIDE 3 – 3/4" CONDUIT FOR PNEUMATIC TUBE CONTROLS AND POWER AT 4" AFF (UON). RE:DRIVE THRU CONDUIT LAYOUT ON E-2.1.
- P8 PROVIDE JUNCTION BOX MOUNTED AT 9" AFF (UON) WITH A CLEAR DISTRUBUTION CABLE CONNECTOR FOR CONNECTION TO VENDOR PROVIDED CABINETS. RE: 5/E-1.3.
- P9 PROVIDE 1/2" CONDUITS FOR UPS CIRCUITRY, HARD WIRED IN THE FIELD TO ACCEPT UNIWEB CABLING. RE: 4/E-1.3 CONNECTIONS.
- P10 PROVIDE 1-1" CONDUIT AT 9" AFF (UON) WITH A PURPLE DISTRUBUTION CABLE CONNECTOR FOR CONNECTION TO VENDOR PROVIDED CABINETS. RE: 5/E-1.3.
- P11 PROVIDE (3) JUNCTION BOXES AT 12" AFF (UON) W/ 2 – 1" CONDUITS WITH PULL STRING TO ABOVE PHARMACY CEILING.
- P12 PROVIDE DUPLEX OUTLET AT 12" AFF FOR EASY AIRE 10 POWER SUPPLY.
- P13 PROVIDE NEMA L5-30R TWIST LOCK RECEPTACLE IN CANOPY ABOVE DRIVE-UP ISLAND FOR EASY AIRE 10 BLOWER PACKAGE.
- P14 WALL MOUNT DUPLEX RECEPTACLE AND JUNCTION BOX 84" AFF WITH 3/4" C TO 6" ABOVE CEILING FOR FUTURE CATV OUTLET.
- P15 BEVERAGE COOLER OUTLET. PROVIDE DUPLEX OUTLET MOUNTED 18" AFF.
- P16 PROVIDE DUPLEX AT 18" AFF FOR BLOOD PRESSURE MACHINE AND FUTURE CUSTOMER ACCESS COMPUTER.
- P17 PROVIDE JUNCTION BOX AND CONDUIT FOR VERTICAL LIFT PUSHBUTTON STATION COORDINATE WITH EQUIPMENT INSTALLER PRIOR TO ANY WORK.
- P18 PROVIDE JUNCTION BOX AND CONDUIT FOR VERTICAL LIFT MOTOR CONTROL BOX COORDINATE WITH EQUIPMENT INSTALLER PRIOR TO ANY WORK.
- P19 PROVIDE 30A/3P FUSED DISCONNECT SWITCH WITHING 5'-0" & LINE OF SIGHT OF CONTROLS, CONNECT TO VERTICAL LIFT (208V/3P, 5 HP). COORDINATE EXACT LOCATION AND ELECTRICAL REQUIREMENTS WITH EQUIPMENT INSTALLER PRIOR TO ANY WORK. ALL OUTLETS WITHIN 6'-0" MUST BE GFI.

GENERAL NOTES (PHARMACY AREA):

1. INSTALL ALL TELEPHONE OUTLETS AT 4'-6" A.F.F. , UNLESS OTHERWISE NOTED.
2. PHARMACY FIXTURES COME WIRED PER THIS DIAGRAM.
3. PROVIDE FUTURE USE JUNCTION BOXES WITH BLANK COVERPLATES.
4. ROUTE ELECTRICAL WIRE AND FLEXIBLE CONDUITS THROUGH PRE-FABRICATED WIRE CUT-OUTS AT THE PHARMACY CHECKOUTS AND END PANELS. DO NOT DRILL THROUGH PANELS FOR ANY REASON.

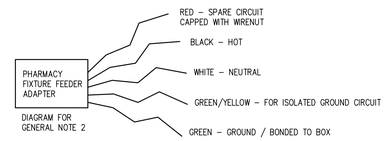

ALL ELECTRICAL EQUIPMENT SHALL BE LISTED BY UL. OR A COUNTY APPROVED THIRD PARTY TESTING FACILITY (PER SECTION 110.3(B))

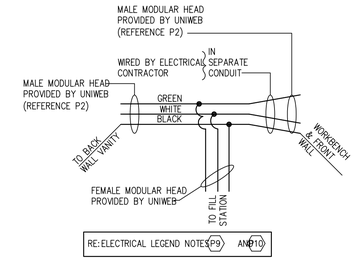

3 E-1.4 WIRING DETAIL
SCALE: NTS

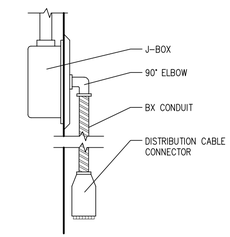

4 E-1.4 MILLWORK ELEC DETAIL
SCALE: NTS

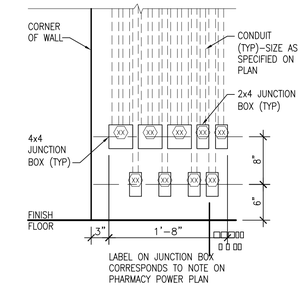

5 E-1.4 JUNCTION BOX ELEVATION
SCALE: 1" = 1'-0"

SYMBOL LEGEND
(PRE-WIRED FIXTURES ONLY)

- B BLANK
- DATA/COMMUNICATION (LOGISTICS)
- QUAD POWER BOX
- C CLEAN (ISOLATED)
- CR CLEAN RED (ISOLATED)
- D DIRTY (REGULAR)
- J# UPS CIRCUIT
- REF REFRIGERATOR DIRTY (REGULAR)
- PT PASS-THRU BOX
- U UPS ASSEMBLY (UNIWEB WIRING)

MODULAR WIRING CONNECTORS COLOR LEGEND

ORANGE – ISOLATED GROUND
PURPLE – CONTROL POWER
CLEAR – GENERAL PURPOSE

OUTLETS IN THIS PLAN COME INSTALLED IN FIXTURES AND ARE SHOWN FOR COORDINATION PURPOSES ONLY. DO NOT INCLUDE IN BID.

CONTRACTOR RESPONSIBLE FOR "PLUGGING" ALL FIXTURE SECTIONS TOGETHER.

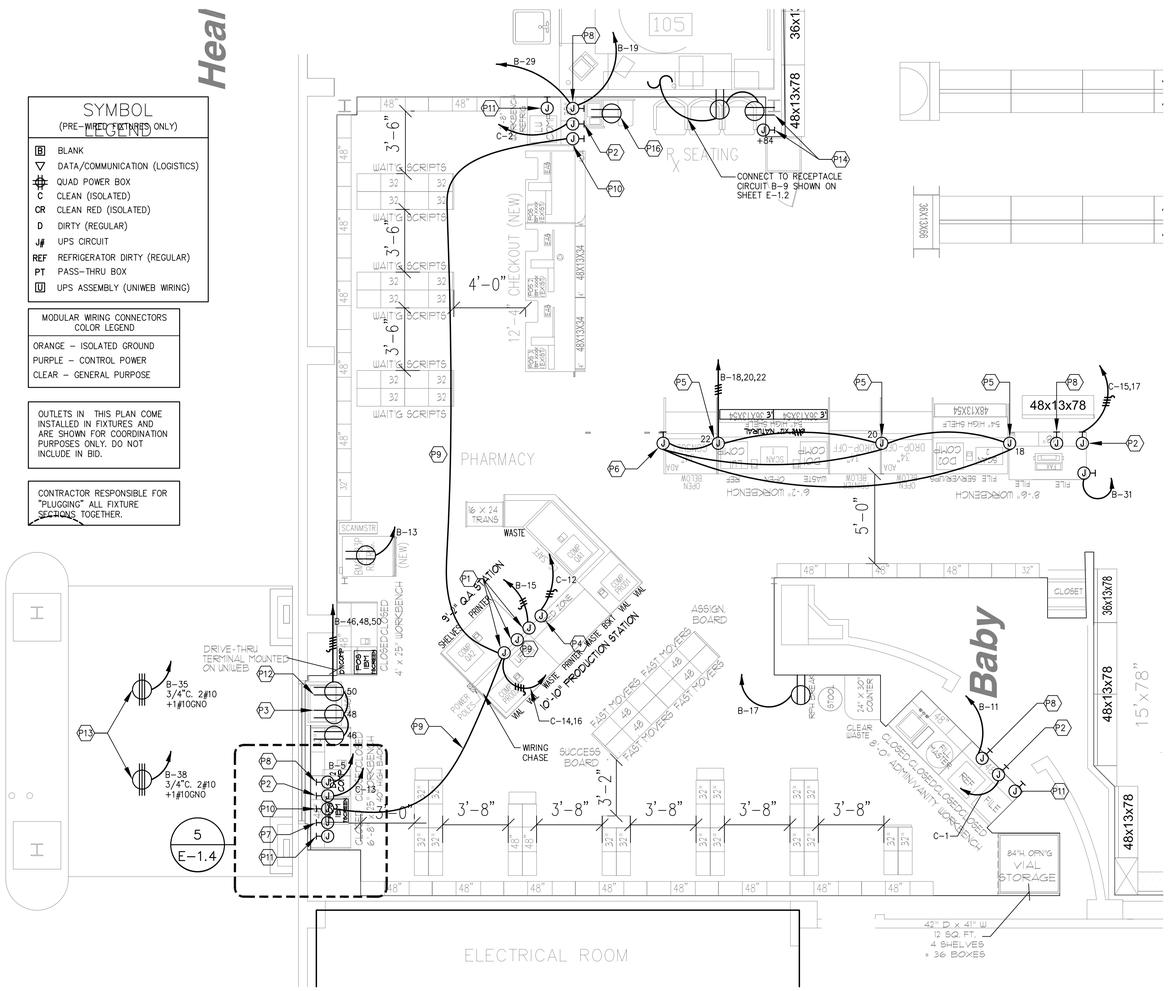

1 E-1.4 PHARMACY - 1ST FLOOR ELECTRICAL POWER PLAN
SCALE: 1/4"=1'-0"

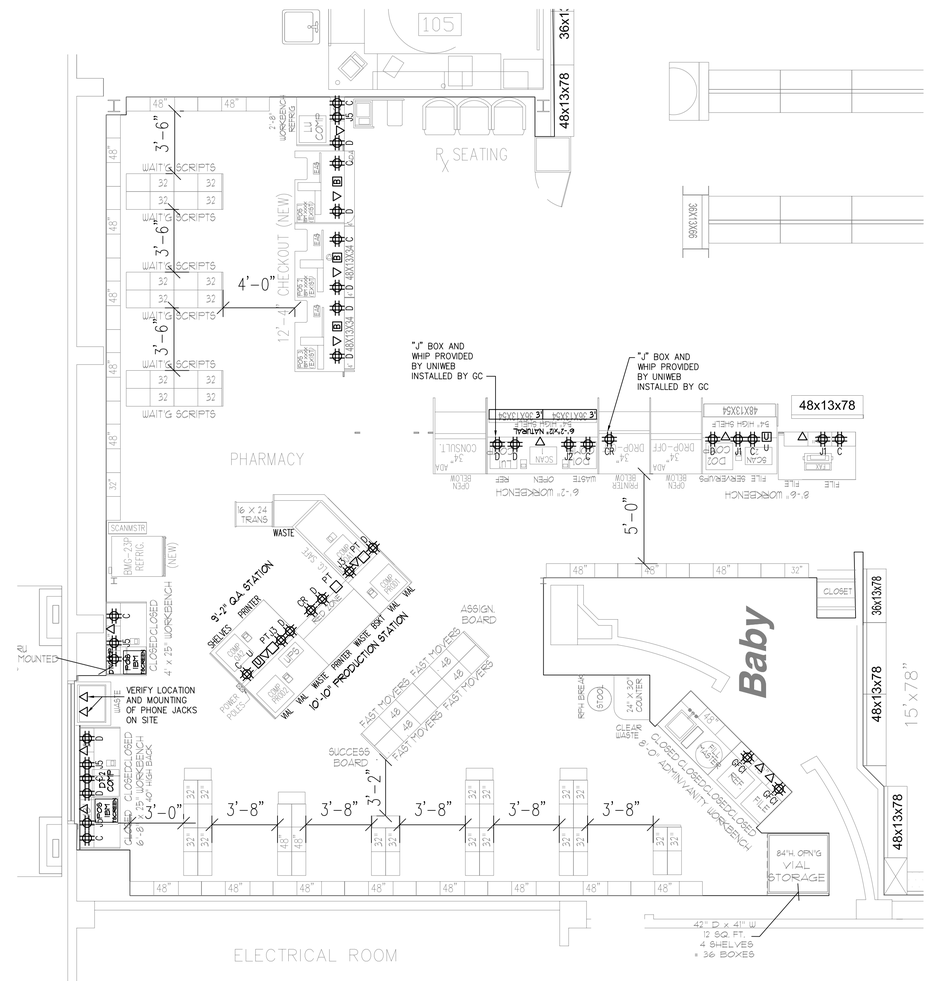

NOTE: CONTRACTOR NOT TO PRICE PRE-WIRED FIXTURE OUTLETS

2 E-1.4 PHARMACY - 1ST FLOOR PRE-WIRE FIXTURE OUTLET PLAN
SCALE: 1/4"=1'-0"

UNIWEB, INC.
222 S. Promenade Ave.
Corona, CA. 92879
PH: (951) 279-7999
FAX: (951) 279-8986

"In accordance with the applicable section of the following codes:
NATIONAL ELECTRICAL CODE, ADOPTED EDITION.

See manufacturer's installation instructions for components comprising the kit and assembly details."

Prefabricated Modular Room For Indoor Use Only.
Factory Provided Wiring–Prefabricated Manufactured Wiring System.

Features Subject To Inspection By Local Inspection Authority:

A. Installation of electrical wiring system, including all electrical devices and components.
B. Connections to branch circuit(s).
C. Properly sized branch circuit(s).
D. Number of receptacles on branch circuit(s).
E. System grounding.
F. Ground-Fault Circuit Interrupter and overload device protection.

ROBERT KABICEK Architects And Associates, Inc.
18662 MacArthur Blvd. Ste.200
Irvine, California 92612
(949) 798-3838
www.rkaa.com

REGISTERED PROFESSIONAL ENGINEER LAN V. NGUYEN No. 015596 Exp.12-31-2011 ELECTRICAL STATE OF CALIFORNIA

date:

COPYRIGHT ALL RIGHTS RESERVED. ROBERT KABICEK ARCHITECTS AND ASSOC., INC. THIS DRAWING IS AN INSTRUMENT OF SERVICE IT IS THE PROPERTY OF ROBERT KABICEK ARCHITECTS AND ASSOC. INC. AND MAY NOT BE REPRODUCED OR REPRODUCTION MAY BE MADE WITHOUT WRITTEN PERMISSION OF THE ARCHITECT.

01/06/11	CHATTEL ARCH. SUBMITTAL
01/10/11	PLAN CHECK CORRECTIONS
01/27/11	CHATTEL ARCH. SUBMITTAL

NOTICE OF ALTERNATE BILLING OR PAYMENT TO ALL THIRD PARTY PAYORS: PLEASE NOTE THAT THE CHARGES FOR THE SERVICES RENDERED TO YOU MAY BE DIFFERENT IN BILLING CYCLES OTHER THAN THE CURRENT BILLING CYCLE. YOU MAY BE ASKED TO MAKE PAYMENT ON SOME SUBSEQUENT BILLING CYCLE. PRIOR REVIEW AND APPROVAL OF BILLING AND DETERMINATION WRITTEN DESCRIPTION OF SUCH OTHER BILLING CYCLES IS REQUIRED. A WRITTEN DESCRIPTION IS AVAILABLE FROM THE UNDERSIGNED AT THE OFFICES OF RPM.

OR HIS DESIGNATED AGENT SHALL PROVIDE THIS WRITTEN DESCRIPTION ON REQUEST.

DEVELOPER:
CHARLES COMPANY
9034 W. SUNSET BLVD.
WEST HOLLYWOOD
CA 90069
TEL (310) 247-0900
FAX (310) 247-1525

CVS pharmacy
STORE #49557
909 S. ATLANTIC BLVD
LOS ANGELES, CA

design	RKA	drawn	RKA
check	RKA		

sheet E-1.4 of

job 09151

RPM Engineers, Inc.
102 DISCOVERY
Irvine, Ca. 92618
Tel: 949-450-1229
Fax: 949-450-1454
Contact: Lan Nguyen ext. 203
e-mail: lann@rpmpe.com

RPM# 10-282 01/27/11

ELECTRICAL LEGEND NOTES (MANAGER'S):

(S1) PROVIDE (4) SINGLE GANG REDUCING RINGS AT 1'-8" AFP WITH PULLWIRE. PROVIDE PATHWAY IN EXTERIOR WALL INSULATION FOR LOW VOLTAGE CABLING.

(S2) INSTALL RECEPTACLES AT 1'-8" AFF UNLESS NOTED OTHERWISE.

(S3) PROVIDE (1) QUAD RECEPTACLE AT 1'-8" AFF FOR CCTV.

(S4) PROVIDE ISOLATED GROUND RECEPTACLE (1) QUAD FOR POS AS SHOWN ON POS/MAINFRAME. ELEVATION DETAILS, 4/E-2.1.

(S5) PROVIDE (1) JUNCTION BOX WITH PULLWIRE TO 6" ABOVE CEILING FOR FUTURE USE.

(S6) PROVIDE JUNCTION BOX CONFIGURATION FOR MUZAK SYSTEM. RE: DETAIL 4/E-2.1 FOR MORE INFORMATION.

(S7) PROVIDE DRILL HOLE THRU COUNTER AT TELEPHONE JACK LOCATIONS, RE: SHEET F-1.

(S8) PROVIDE JUNCTION BOX WITH PLASTER RING FOR INTERCOM RECEPTACLE. COORDINATE EXACT LOCATION WITH ARCHITECT. PROVIDE 1 – 1" C. (WITH PULLWIRE) FROM JUNCTION BOX TO 6" ABOVE CEILING.

(S9) PROVIDE (1) QUAD RECEPTACLE AT 7'-6" AFF FOR MUZAK SYSTEM. RE: DETAIL 4/E-2.1

(S10) PROVIDE (1) 2" CONDUIT WITH 200 lb PULLWIRE. ROUTE TO PYLON SIGN FOR FIBER OPTICS CABLE, RE: SHEET SE-1.1.

(S11) PROVIDE 2#12,#12G, 1/2"C FROM CU-2 TO AHU-1. INSTALL PER MFR GUIDELINES.

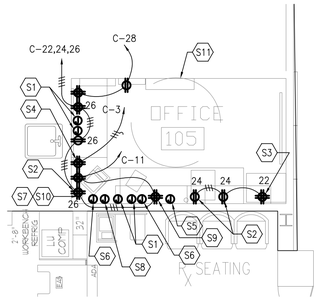

1 / E-2.1 MANAGER'S FLOOR PLAN – POWER

SCALE: 1/4"= 1'-0"

ELECTRICAL LEGEND NOTES (PHOTOLAB AREA):

(L1) PROVIDE 3 – 1" C. WITH PULLWIRES. STUB UP UNDER CABINET AND AT 12" ABOVE SUSPENDED CEILING. PROVIDE 2 LOW VOLTAGE CONDUITS AND 1 POWER CONDUIT WITH TAGGED AND LABELED PULL WIRE.

(L2) PROVIDE ONE (1)-NEMA 5-15R RECEPTACLE WITH ISOLATED GROUND FLUSH MOUNTED 24" AFF TO BOTTOM OF BOX @ CHECKOUTS.

(L3) PROVIDE 120V, 20 AMP, RECEPTACLE TO MATCH FILM PROCESSOR. MOUNT AT 24" AFF TO BOTTOM OF BOX. LOCATE 14'-0" FROM PHOTO LAB SIDE OF FINISHED WALL. PROVIDE 2 #10 , 1 #10G, 1/2 C TO PANEL "D" AS INDICATED.

(L4) PROVIDE JUNCTION BOX FOR WATER HEATER, FLUSH MOUNTED 24" AFF TO BOTTOM OF BOX IN BASE CABINET. COORDINATE WITH DIVISION 15.

(L5) PROVIDE ONE (1) NEMA 5-15R QUAD RECEPTACLE FLUSH MOUNTED 24" AFF FOR SILVER SPONGE. COORDINATE EXACT LOCATION AND MOUNTING HEIGHT WITH MILLWORK CONTRACTOR.

(L6) PROVIDE ONE (1) NEMA 5-15R QUAD RECEPTACLES FLUSH MOUNTED ABOVE COUNTER.

(L7) PROVIDE ONE (1) NEMA 5-15R QUAD RECEPTACLES FLUSH MOUNTED 24" AFF TO BOTTOM OF BOX.

(L8) PROVIDE 208V, 20 AMP, 2 POLE, 3 WIRE GROUNDING, RECEPTACLE TO MATCH PRINTER PROCESSOR. MOUNT AT 24" AFF TO BOTTOM OF BOX. LOCATE 12'-6" FROM PHOTO LAB SIDE OF FINISHED WALL. PROVIDE 2 #10 , 1 #10G, 1/2 C TO PANEL "D" AS INDICATED.

(L9) PROVIDE 1 QUAD BOX REDUCING RING AT 20" AFF, LOCATE 12'-0" FROM PHOTO LAB SIDE OF FINISHED COOLER WALL, WITH 1-1" CONDUIT WITH PULLWIRE.

(L10) PROVIDE ONE (1) NEMA 5-15R DUPLEX RECEPTACLE FLUSH MOUNTED 24" AFF TO BOTTOM OF BOX. LOCATE 11'-0" FROM PHOTO LAB SIDE OF FINISHED COOLER WALL.

(L11) PROVIDE 1 JUNCTION BOX AT 24" AFF, WITH 1" CONDUIT WITH PULLWIRE AT 12" ABOVE CEILING.

COORDINATE EXACT LOCATION OF ALL ELECTRICAL CONNECTIONS WITH OTHER TRADES.

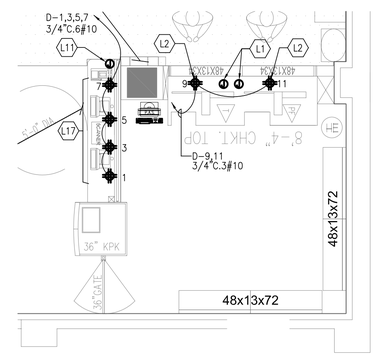

2 / E-2.1 PHOTO LAB POWER PLAN

SCALE: 1/4"= 1'-0"

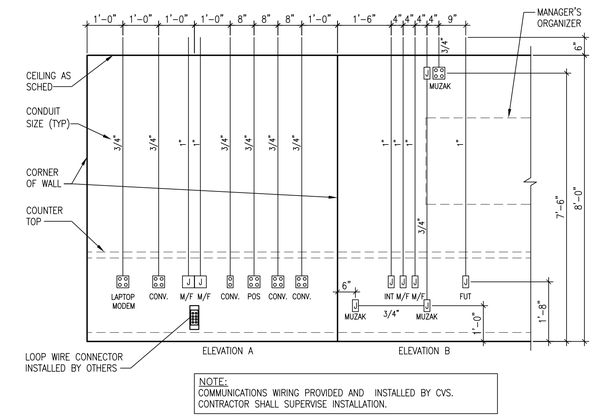

NOTE:
COMMUNICATIONS WIRING PROVIDED AND INSTALLED BY CVS. CONTRACTOR SHALL SUPERVISE INSTALLATION.

4 / E-2.1 POS/MAINFRAME ELEVATION

SCALE: 1/2" = 1'-0"

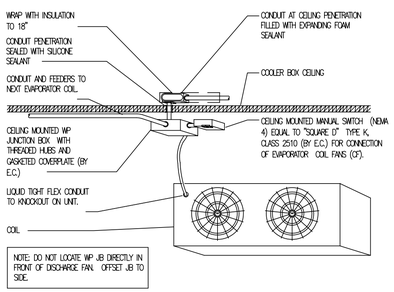

5 / E-2.1 EVAPORATOR ELECTRICAL DETAIL

SCALE: NOT TO SCALE

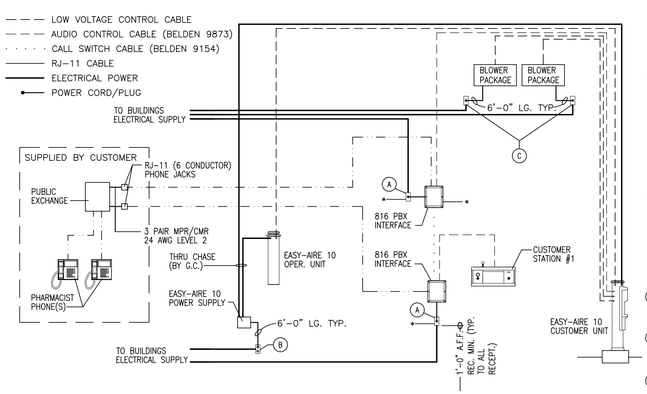

NOTES:

1. PERFORM WORK AND PROVIDE MATERIALS IN COMPLIANCE WITH THE NATIONAL, STATE, AND LOCAL ELECTRICAL CODES.
2. PROVIDE AND INSTALL CONDUIT, POWER WIRES, JUNCTION BOXES, AND OVERLOAD PROTECTION DEVICES.
3. INSTALL EACH CUSTOMER UNIT ON AN INDIVIDUAL CIRCUIT. FAILURE OF ONE UNIT SHALL NOT EFFECT OTHER UNITS.
4. SIZE POWER WIRE AND CONDUIT SIZE PER THE ADOPTED NEC.
5. APPLY POWER TO THE VAT EQUIPMENT ONLY UNDER DIEBOLD SUPERVISION.
6. PROVIDE THE GROUNDING OF ALL ELECTRICAL EQUIPMENT PER NED 250.
7. CONCEAL AUDIO, POWER AND CONTROL CABLES FROM CABLE TROUGH (BY OTHER) TO UNDERSIDE OF CEILING WITH CONDUIT (BY GC).

LEGEND NOTES:

(A) 816 PBX INTERFACE – PROVIDE (1) DUPLEX OUTLET ON (1) 120 VAC, 60 Hz, 1ø, (3W), 20 AMP DEDICATED BRANCH CIRCUIT.

(B) EASY AIRE 10 POWER SUPPLY – PROVIDE (1) DUPLEX OUTLET ON (1) 120 VAC, 60 Hz, 1ø, (3W), 20 AMP DEDICATED BRANCH CIRCUIT.

(C) EASY-AIRE 10 BLOWER PACKAGE – PROVIDE 1 NEMA TYPE L5-30R TWIST LOCK RECEPTACLE AT EACH BLOWER PACKAGE WITHIN 6'-0" WITH 30 AMP BRANCH CIRCUIT.

7 / E-2.1 TYPICAL SYSTEM SCHEMATIC

SCALE: NOT TO SCALE

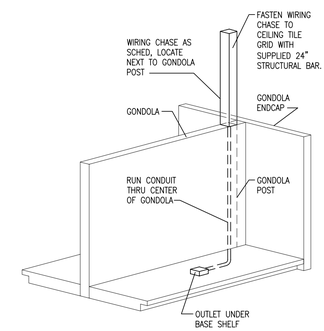

11 / E-2.1 WIRING CHASE INSTALL DETAIL

SCALE: NOT TO SCALE

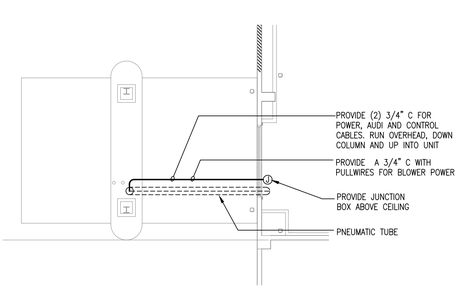

8 / E-2.1 DRIVE THRU CONDUIT LAYOUT

SCALE: 1/8" = 1'-0"

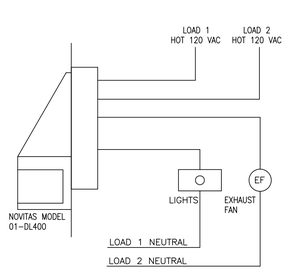

9 / E-2.1 EXHAUST FAN SWITCHING DETAIL

SCALE: NOT TO SCALE

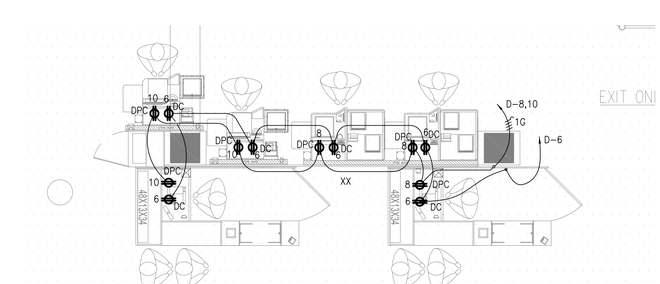

DPC – DUPLEX POS ISOLATED GROUND OUTLET
DC – DUPLEX CONVENIENCE OUTLET
FP – COMPUTER FACE PLATE BOX
MO – MONEY ORDER

TYPICAL OUTLET SPACING

NOTES:

- INSTALL OUTLETS AT FIXTURE BACK PANEL 30" A.F.F. POS OUTLET WIRED TO SEPARATE ISOLATED GROUND PANEL
- HOLD WIRING BETWEEN FIXTURE UPRIGHTS AS ON DETAIL 3/E-2.1
- RUN WIRING IN SHELVING UPRIGHTS WITH 1/2" GREENFIELD OR BX SLEEVE.
- GENERAL CONTRACTOR IS TO INSTALL THE CASH DROP BOXES IN LOCATIONS AS SHOWN.
- LOCATE UNDERCOUNTER CASH CHANGE DRAWER AS DIMENSIONED.
- GENERAL CONTRACTOR TO DRILL 2-1/2" DIAMETER HOLE IN CHECKOUT TOP AS DIMENSIONED. PROVIDE BLACK GROMMET TO FIT.

10 / E-2.1 CHECKOUT ELECTRICAL DETAIL

SCALE: 1/4"= 1'-0"

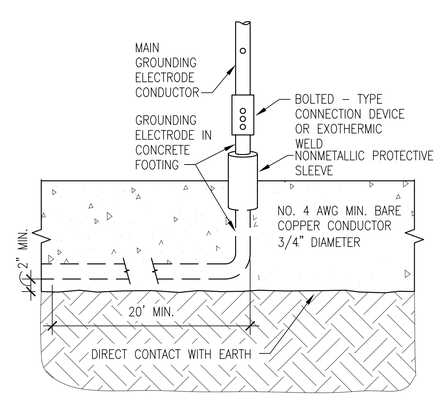

12 / E-2.1 UFER GROUNDING SYSTEM

SCALE: NOT TO SCALE

ROBERT KABICEK Architects And Associates, Inc.
18662 MacArthur Blvd. Ste.200
Irvine, California 92612
(949) 798-3838
www.rkaa.com

REGISTERED PROFESSIONAL ENGINEER LAN V. NGUYEN No. 015596 Exp.12-31-2011 ELECTRICAL STATE OF CALIFORNIA

date:

COPYRIGHT ALL RIGHTS RESERVED. ROBERT KABICEK ARCHITECTS AND ASSOC. INC. THIS DRAWING IS AN INSTRUMENT OF SERVICE IT IS THE PROPERTY OF ROBERT KABICEK ARCHITECTS AND ASSOC. INC. AND MAY NOT BE REPRODUCED OR REPRODUCTION HERE OF USED WITHOUT WRITTEN PERMISSION OF THE ARCHITECT.

01/06/11	CHATTEL ARCH. SUBMITTAL	
01/10/11	PLAN CHECK CORRECTIONS	
01/27/11	CHATTEL ARCH. SUBMITTAL	

NOTICE OF ALTERNATE BILLING OR PAYMENT CYCLE: THIS CONTRACT MAY ALLOW THE OWNER TO ALTERNATE BILLING OR PAYMENT TO A DEFINITE BILLING CYCLE OTHER THAN TWENTY DAYS. THIS CONTRACT MAY ALLOW THE OWNER TO ALTERNATE BILLING OR ALTERNATIVE SCHEDULE WITH CERTIFICATION AND APPROVAL OF BILLING AND DEFINITELY SCHEDULE PAYMENTS. THE BILLING CYCLE AND/OR CYCLE APPLICABLE TO THE PROJECT IS AVAILABLE FROM THE OWNER AT THE OFFICES OF:

OR HIS DESIGNATED AGENT RKAA. PROVIDE THIS CONTRACT DESCRIPTION ON REQUEST

DEVELOPER:
CHARLES COMPANY
9034 W. SUNSET BLVD.
WEST HOLLYWOOD
CA 90069
TEL (310) 247-0900
FAX (310) 247-1525

CVS pharmacy
STORE #49557
909 S. ATLANTIC BLVD
LOS ANGELES, CA

design	RKA
drawn	RKA
check	RKA

sheet E-2.1 of

job 09151

RPM Engineers, Inc.
102 DISCOVERY
Irvine, Ca. 92618
Tel: 949-450-1229
Fax: 949-450-1454
Contact: Lan Nguyen ext. 203
e-mail: lann@rpmpe.com

RPM# 10-282 01/27/11

PANEL: A PANELVOLTAGE: 120/208 3P, 4W CIRCUIT CODE: N: NON-CONTINUOUS
LOCATION: MEZZANINE BUS: 225A L: LONG-CONTINUOUS
MOUNTING: SURFACE MAIN: FED THRU LUGS R: DEMANDABLE RECEPTACLES
AIC RATING: 10,000 K: KITCHEN

CKT NO	VA LOAD A	VA LOAD B	VA LOAD C	LOAD DESCRIPTION	CODE	TYPE CNT. M	TYPE CNT. R	TYPE CNT. L	C.B. TR	C.B. P	BUS A B C	C.B. TR	C.B. P	TYPE CNT. L	TYPE CNT. R	TYPE CNT. M	CODE	LOAD DESCRIPTION	VA LOAD A	VA LOAD B	VA LOAD C	CKT NO
1	1102			LIGHTS RETAIL	L			19	20	1	X	20	1	19			L	LIGHTS RETAIL	1102			2
3		580		LIGHTS RETAIL	L			10	20	1	X	20	1	10			L	LIGHTS RETAIL		580		4
5			870	LIGHTS RETAIL	L			15	20	1	X	20	1	15			L	LIGHTS RETAIL			870	6
7	406			LIGHTS RETAIL	L			7	20	1	X	20	1	7			L	LIGHTS RETAIL	868			8
9		406		LIGHTS RETAIL	L			7	20	1	X	20	1	11			L	MEZZANINE LTS		580		10
11			450	LIGHTS RETAIL	L			5	20	1	X	20	1			2	N	EF-1 & EF-2			120	12
13	928			LIGHTS PHARMACY	L			16	20	1	X	20	1	6			L	LIGHTS RETAIL	348			14
15		1218		LIGHTS PHARMACY	L			21	20	1	X	20	1					SPARE				16
17			500	RETAIL VALENCE LTS	L	1			20	1	X	20	1			1	L	CANOPY SIGN (CVS)			1200	18 (1)
19	500			RETAIL VALENCE LTS	L	2			20	1	X	20	1			1	L	CANOPY SIGN (PHARMACY)	1200			20
21				SPARE					20	1	X	20	1			1	L	CANOPY SIGN (24 HRS)		1200		22
23				SPARE					20	1	X	20	1			1	L	CANOPY SIGN (CVS)			1200	24
25	360			RETAIL MONITOR REC.	N		2		20	1	X	20	1			1	L	CANOPY SIGN (PHARMACY)	1200			26
27				SPARE					20	1	X	20	1			1	L	CANOPY SIGN (24 HRS)		1200		28
29				SPARE					20	1	X	20	1					SPARE				30
31				SPARE					20	1	X	20	1				L	LIGHTS EXTERIOR	450			32
33				SPARE					20	1	X	20	1					SPARE				34
35				SPARE					20	1	X	20	1			1	L	WALKIN REF. LTS			500	36
37				SPARE					20	1	X	20	1					SPARE				38
39				SPARE					20	1	X	20	1					SPARE				40
41				SPARE					20	1	X	20	1					SPARE				42
	3296	2204	1820	PHASE TOTALS														PHASE TOTALS	5168	3560	3890	

Total Phase A: 8464
Total Phase B: 5764
Total Phase C: 5710

CONNECTED VA (CODE N): 480
CONNECTED VA (CODE L): 19458
CONNECTED VA (CODE R):
CONNECTED VA (CODE K):
TOTAL CONNECTED KVA: 20.0
DEMAND KVA:
TOTAL ADJUSTED KVA: 20.0
TOTAL PANEL AMPS: 70.6
AMPS W/LCL: 87.5

PANEL: A PANELVOLTAGE: 120/208 3P, 4W CIRCUIT CODE: N: NON-CONTINUOUS
LOCATION: MEZZANINE BUS: 225A L: LONG-CONTINUOUS
MOUNTING: SURFACE MAIN: MLO R: DEMANDABLE RECEPTACLES
AIC RATING: 10,000 K: KITCHEN

CKT NO	VA LOAD A	VA LOAD B	VA LOAD C	LOAD DESCRIPTION	CODE	TYPE CNT. M	TYPE CNT. R	TYPE CNT. L	C.B. TR	C.B. P	BUS A B C	C.B. TR	C.B. P	TYPE CNT. L	TYPE CNT. R	TYPE CNT. M	CODE	LOAD DESCRIPTION	VA LOAD A	VA LOAD B	VA LOAD C	CKT NO
43				SPACE							X	20	1	8			L	EXTERIOR CORNICE LTS	432			44
45				SPACE							X	20	1	6			L	LIGHTS EXTERIOR		450		46
47				SPACE							X	20	1	1			L	TRASH ENCLOSURE LT			620	48
49				SPACE							X							SPACE				50
51				SPACE							X							SPACE				52
53				SPACE							X	30	2	10			L	SITE LIGHTING			1600	54
57				SPACE							X	--	--	--			L	----	1600			56
59				SPACE							X	30	2	10			L	SITE LIGHTING		1600		58
69				SPACE							X	--	--	--			L	----			1600	60
				PHASE TOTALS														PHASE TOTALS	2032	2050	3820	

Total Phase A: 2032
Total Phase B: 2050
Total Phase C: 3820

CONNECTED VA (CODE N):
CONNECTED VA (CODE L): 7902
CONNECTED VA (CODE R):
CONNECTED VA (CODE K):
TOTAL CONNECTED KVA: 8.0
DEMAND KVA:
TOTAL ADJUSTED KVA: 8.0
TOTAL PANEL AMPS: 31.9
AMPS W/LCL: 39.9

PANEL: B PANELVOLTAGE: 120/208 3P, 4W CIRCUIT CODE: N: NON-CONTINUOUS
LOCATION: MEZZANINE BUS: 225A L: LONG-CONTINUOUS
MOUNTING: SURFACE MAIN: FED THRU LUGS R: DEMANDABLE RECEPTACLES
AIC RATING: 10,000 K: KITCHEN

CKT NO	VA LOAD A	VA LOAD B	VA LOAD C	LOAD DESCRIPTION	CODE	TYPE CNT. M	TYPE CNT. R	TYPE CNT. L	C.B. TR	C.B. P	BUS A B C	C.B. TR	C.B. P	TYPE CNT. L	TYPE CNT. R	TYPE CNT. M	CODE	LOAD DESCRIPTION	VA LOAD A	VA LOAD B	VA LOAD C	CKT NO
1	540			RTU REC	N		3		20	1	X	20	1			1	N	SENSORMATIC	500			2
3		540		RETAIL COLUMN REC.	N		3		20	1	X	20	1			1	N	AUTOMATIC DOOR		500		4
5			500	PHARMACY J-BOX	N	1			20	1	X	20	1		4		N	RETAIL REC.			720	6
7				SPARE	N				20	1	X	20	1		5		N	RESTROOM REC.	900			8
9		540		RETAIL COLUMN REC.	N		3		20	1	X	20	1		1		N	REC. RECEIVING / CART		1500		10
11			500	PHARMACY J-BOX	N	1			20	1	X	20	1				N	SPARE				12
13	920			PHARMACY REF. REC.	N		1		20	1	X	20	1		1		N	REC. ELECTRICAL AREA	400			14
15		500		PHARMACY ISLAND J-BOX	N	1			20	1	X	20	1		1		N	REC. ELECTRICAL AREA		400		16
17			360	PHARMACY REC.	N		1		20	1	X	20	1			1	N	PHARMACY ROLLUP DR.			800	18
19	360			BLOOD PRESS. REC.	N		1		20	1	X	20	1			1	N	PHARMACY ROLLUP DR.	800			20
21		1664		REACH-IN REF. 48E	N	1			20	2	X	20	1			1	N	PHARMACY ROLLUP DR.		800		22
23			1664	----	N	--			--	--	X	20	1			1	N	EVAP COOLER			1720	24
25	1425			REACH-IN REF. 72E	N	1			20	2	X	20	1			1	N	EVAP COOLER	1720			26
27		1425		----	N	--			--	--	X	20	1				N	SPARE				28
29			500	PHARMACY REGISTER	N		1		20	1	X	20	1		1		N	ATM REC.			500	30
31	500			PHARMACY J-BOX	N	1			20	1	X	20	1			1	N	RECVG PUSHBUTTON	500			32
33		500		ACCESS ALARM	N		1		20	1	X	20	1			1	N	FIRE RISER		500		34
35			2500	PNEUMATIC	N	1			30	1	X	20	1		1		N	EDF REC.			800	36
37	500			REACH-IN REF. 72E LTS	N	1			20	1	X	30	1			1	N	PNEUMATIC	2500			38
39		360		MONEY ORDER REC.	N		1		20	1	X	20	1		1		N	ICE MACHINE REC,		960		40
41			1080	SEASONAL SHELL REC.	N		6		20	1	X	20	1		1		N	SHELL REC.			500	42
	4245	5529	7104	PHASE TOTALS														PHASE TOTALS	7320	4660	5040	

Total Phase A: 11565
Total Phase B: 10189
Total Phase C: 12144

CONNECTED VA (CODE N): 33898
CONNECTED VA (CODE L):
CONNECTED VA (CODE R):
CONNECTED VA (CODE K):
TOTAL CONNECTED KVA: 33.9
DEMAND KVA:
TOTAL ADJUSTED KVA: 33.9
TOTAL PANEL AMPS: 101.2
AMPS W/LCL: 101.2

PANEL: B PANELVOLTAGE: 120/208 3P, 4W CIRCUIT CODE: N: NON-CONTINUOUS
LOCATION: MEZZANINE BUS: 225A L: LONG-CONTINUOUS
MOUNTING: SURFACE MAIN: MLO R: DEMANDABLE RECEPTACLES
AIC RATING: 10,000 K: KITCHEN

CKT NO	VA LOAD A	VA LOAD B	VA LOAD C	LOAD DESCRIPTION	CODE	TYPE CNT. M	TYPE CNT. R	TYPE CNT. L	C.B. TR	C.B. P	BUS A B C	C.B. TR	C.B. P	TYPE CNT. L	TYPE CNT. R	TYPE CNT. M	CODE	LOAD DESCRIPTION	VA LOAD A	VA LOAD B	VA LOAD C	CKT NO
43				SPARE					20	1	X	30	1			1	N	COOLER DR HEATER	2500			44
45				SPARE					20	1	X	20	1			1	N	PBX SYSTEM		500		46
47			1800	HAND DRYER	N	1			20	1	X	20	1			1	N	PBX SYSTEM			500	48
49	1800			HAND DRYER	N	1			20	1	X	20	1			1	N	EASY AIR 10	500			50
(1) 51		500		FACP	N				20	1	X	20	1					SPARE				52
53			720	RECEPTACLE	N		4		20	1	X	20	1					SPARE				54
57	564			COOLER TEM	N	1			15	1	X	20	1					SPARE				56
59				SPACE							X	20	1					SPARE				58
69				SPACE							X	20	1					SPARE				60
	2364	500	2520	PHASE TOTALS														PHASE TOTALS	3000	500	500	

Total Phase A: 5364
Total Phase B: 1000
Total Phase C: 3020

CONNECTED VA (CODE N): 9384
CONNECTED VA (CODE L):
CONNECTED VA (CODE R):
CONNECTED VA (CODE K):
TOTAL CONNECTED KVA: 9.4
DEMAND KVA:
TOTAL ADJUSTED KVA: 9.4
TOTAL PANEL AMPS: 44.7
AMPS W/LCL: 44.7

PANEL: **MDP** PANELVOLTAGE: 120/208 3P, 4W CIRCUIT CODE: N: NON-CONTINUOUS
LOCATION: MEZZANINE BUS: 800A L: LONG-CONTINUOUS
MOUNTING: SURFACE MAIN: M.L.O. R: DEMANDABLE RECEPTACLES
AIC RATING: 10,000 K: KITCHEN

CKT NO	VA LOAD A	VA LOAD B	VA LOAD C	LOAD DESCRIPTION	CODE	TYPE CNT. M	TYPE CNT. R	TYPE CNT. L	C.B. TR	C.B. P	BUS A B C	C.B. TR	C.B. P	TYPE CNT. L	TYPE CNT. R	TYPE CNT. M	CODE	LOAD DESCRIPTION	VA LOAD A	VA LOAD B	VA LOAD C	CKT NO
(2) 1	1704			AHU-1 (MEZZANINE)	N	1			20	3	X	225	3			1	N	PANEL 'A'	10496			2
3		1704		----	N	--			--	--	X	--	--			--	N	----		7814		4
5			1704	----	N	--			--	--	X	--	--			--	N	----			9530	6
(2) 7	4944			CU-1 (GROUND FLR)	N	1			50	3	X	225	3			1	N	PANEL 'B'	16929			8
9		4944		----	N	--			--	--	X	--	--			--	N	----		11189		10
11			4944	----	N	--			--	--	X	--	--			--	N	----			15164	12
(2) 13	1704			AHU-2 (MEZZANINE)	N	1			20	3	X	125	3			1	N	PANEL 'C'	6220			14
15		1704		----	N	--			--	--	X	--	--			--	N	----		7700		16
17			1704	----	N	--			--	--	X	--	--			--	N	----			9040	18
(2) 19	4944			CU-2 (GROUND FLR)	N	1			50	3	X	125	3			1	N	PANEL 'D'	9404			20
21		4944		----	N	--			--	--	X	--	--			--	N	----		9780		22
23			4944	----	N	--			--	--	X	--	--			--	N	----			8471	24
(2) 25	1704			AHU-3 (MEZZANINE)	N	1			20	3	X	30	3			1	N	WALK-IN REF. COND.	2280			26
27		1704		----	N	--			--	--	X	--	--			--	N	----		2280		28
29			1704	----	N	--			--	--	X	--	--			--	N	----			2280	30
(2) 31	4944			CU-3 (LOWER ROOF)	N	1			50	3	X	30	3			1	N	VRC	2000			32
33		4944		----	N	--			--	--	X	--	--			--	N	----		2000		34
35			4944	----	N	--			--	--	X	--	--			--	N	----			2000	36
(2) 37	1704			AHU-4 (MEZZANINE)	N	1			20	3	X	20	3			1	N	AHU-5 (MEZZANINE)	1704			38 (2)
39		1704		----	N	--			--	--	X	--	--			--	N	----		1704		40
41			1704	----	N	--			--	--	X	--	--			--	N	----			1704	42
(2) 43	2748			CU-4 (LOWER ROOF)	N	1			40	3	X	40	3			1	N	CU-5 (LOWER ROOF)	2748			44 (2)
45		2748		----	N	--			--	--	X	--	--			--	N	----		2748		46
47			2748	----	N	--			--	--	X	--	--			--	N	----			2748	48
49				SPACE							X							SPACE				50
51				SPACE							X							SPACE				52
53				SPACE							X							SPACE				54
	24396	24396	24396	PHASE TOTALS														PHASE TOTALS	51781	45215	50937	

Total Phase A: 76177
Total Phase B: 69611
Total Phase C: 75333

CONNECTED VA (CODE N): 2E+05
CONNECTED VA (CODE L):
CONNECTED VA (CODE R):
CONNECTED VA (CODE K):
TOTAL CONNECTED KVA: 221.2
DEMAND KVA:
TOTAL ADJUSTED KVA: 221.2
TOTAL PANEL AMPS: 614.5
AMPS W/LCL: 614.5

PANEL: C PANELVOLTAGE: 120/208 3P, 4W CIRCUIT CODE: N: NON-CONTINUOUS
LOCATION: MEZZANINE BUS: 125A L: LONG-CONTINUOUS
MOUNTING: SURFACE MAIN: L.O. R: DEMANDABLE RECEPTACLES
AIC RATING: 10,000 K: KITCHEN

CKT NO	VA LOAD A	VA LOAD B	VA LOAD C	LOAD DESCRIPTION	CODE	TYPE CNT. M	TYPE CNT. R	TYPE CNT. L	C.B. TR	C.B. P	BUS A B C	C.B. TR	C.B. P	TYPE CNT. L	TYPE CNT. R	TYPE CNT. M	CODE	LOAD DESCRIPTION	VA LOAD A	VA LOAD B	VA LOAD C	CKT NO
1	360			PHARMACY REC.	N		1		20	1	X	20	1			1	N	PHARMACY REGISTER	500			2
3		500		OFFICE POS SYSTEM	N		2		20	1	X	20	1					SPARE				4
5			400	RECEPTACLE	N		1		20	1	X	20	1					SPARE				6
(1) 7	200			EMS SYSTEM	N	1			20	1	X	20	1		1		N	TELEPHONE SYSTEM	200			8
9				SPARE					20	1	X	20	1		1		N	ALARM SYSTEM		200		10 (1)
11			720	OFFICE QUAD REC.	N		4		20	1	X	20	1			1	N	PILL COUNTER			500	12
13				SPARE					20	1	X	20	1			1	N	PHARMACY ISLAND JBOX	500			14
15		500		PHARMACY J-BOX	N	1			20	1	X	20	1			1	N	PHARMACY ISLAND JBOX		500		16
17			500	PHARMACY J-BOX	N	1			20	1	X	20	1			1	N	ELECTRONIC MESSAGE BD			800	18
19	360			MEZZANINE MECH. REC.	N		2		20	1	X	20	1			1	N	ELECTRONIC MESSAGE BD	800			20
21		1200		BUILDING SIGN	L	1			20	1	X	20	1		2		N	OFFICE CCTV REC.		360		22
23			1200	BUILDING SIGN	L	1			20	1	X	20	1		4		N	OFFICE QUAD REC.			720	24
25	1200			BUILDING SIGN	L	1			20	1	X	20	1		5		N	OFFICE QUAD REC.	900			26
27		1200		BUILDING SIGN	L	1			20	1	X	20	1		3		N	OFFICE REC.		540		28
29			1200	BUILDING SIGN	L	1			20	1	X	20	1			1	L	PYLON SIGN			1800	30
31	1200			BUILDING SIGN	L	1			20	1	X	20	1					SPARE				32
33		1200		BUILDING SIGN	L	1			20	1	X	20	1			1	L	MONUMENT SIGN		1500		34
35			1200	BUILDING SIGN	L	1			20	1	X	20	1					SPARE				36
37				SPACE					20	1	X	20	1					SPARE				38
39				SPACE					20	1	X	20	1					SPARE				40
41				SPACE					20	1	X	20	1					SPARE				42
	3320	4600	5220	PHASE TOTALS														PHASE TOTALS	2900	3100	3820	

Total Phase A: 6220
Total Phase B: 7700
Total Phase C: 9040

CONNECTED VA (CODE N): 10060
CONNECTED VA (CODE L): 12900
CONNECTED VA (CODE R):
CONNECTED VA (CODE K):
TOTAL CONNECTED KVA: 23.0
DEMAND KVA:
TOTAL ADJUSTED KVA: 23.0
TOTAL PANEL AMPS: 75.4
AMPS W/LCL: 86.7

PANEL: D PANELVOLTAGE: 120/208 3P, 4W CIRCUIT CODE: N: NON-CONTINUOUS
LOCATION: MEZZANINE BUS: 125A L: LONG-CONTINUOUS
MOUNTING: SURFACE MAIN: L.O. R: DEMANDABLE RECEPTACLES
AIC RATING: 10,000 K: KITCHEN

CKT NO	VA LOAD A	VA LOAD B	VA LOAD C	LOAD DESCRIPTION	CODE	TYPE CNT. M	TYPE CNT. R	TYPE CNT. L	C.B. TR	C.B. P	BUS A B C	C.B. TR	C.B. P	TYPE CNT. L	TYPE CNT. R	TYPE CNT. M	CODE	LOAD DESCRIPTION	VA LOAD A	VA LOAD B	VA LOAD C	CKT NO
1	360			PHOTO-QUAD REC.	N		1		20	1	X	30	2			1	N	WH-1	2250			2
3		360		PHOTO-QUAD REC.	N		1		20	1	X	--	--			--	N	----		2250		4
5			360	PHOTO-QUAD REC.	N		1		20	1	X	20	1		6		N	CASH REGISTER			1080	6
7	360			PHOTO-QUAD REC.	N		1		20	1	X	20	1		3		N	CASH REGISTER IG REC.	1,080			8
9		360		PHOTO-QUAD REC.	N		1		20	1	X	20	1		3		N	CASH REGISTER IG REC.		1080		10
11			360	PHOTO-QUAD REC.	N		1		20	1	X							SPACE				12
13				SPACE							X							SPACE				14
15				SPACE							X							SPACE				16
17				SPACE							X							SPACE				18
19				SPACE							X							SPACE				20
21				SPACE							X							SPACE				22
23				SPACE							X							SPACE				24
25				SPACE							X	60	3			1	N	TEL 5-30 COND.UNIT	3000			26
27				SPACE							X	--	--			--	N	----		3000		28
29				SPACE							X	--	--			--	N	----			3000	30
31				SPACE							X							SPACE				32
33		613		TEL 3-30 COND.UNIT	N	1			15	2	X							SPACE				34
35			613	----	N	--			--	--	X	20	1			1	N	TEL 5-30 LT			936	36
37	1250			TEL 3-30 LTS	L	1			20	1	X	20	1			1	N	TEL 5-30 HEATER	1104			38
39		750		TEL-3-30 INDOOR	N	1			20	2	X	20	2			1	N	TEL 5-30 INDOOR		1372		40
41			750	----	N	--			--	--	X	--	--			--	N	----			1372	42
	1970	2083	2083	PHASE TOTALS														PHASE TOTALS	7434	7702	6388	

Total Phase A: 9404
Total Phase B: 9785
Total Phase C: 8471

CONNECTED VA (CODE N): 26410
CONNECTED VA (CODE L): 1250
CONNECTED VA (CODE R):
CONNECTED VA (CODE K):
TOTAL CONNECTED KVA: 27.7
DEMAND KVA:
TOTAL ADJUSTED KVA: 27.7
TOTAL PANEL AMPS: 81.6
AMPS W/LCL: 84.3

ELECTRICAL LEGEND NOTES (PANEL BOARD SCHEDULES ONLY):

1. PROVIDE LOCK-ON DEVICE FOR CIRCUIT BREAKER.
2. PROVIDE H.A.C.R. TYPE CIRCUIT BREAKER.

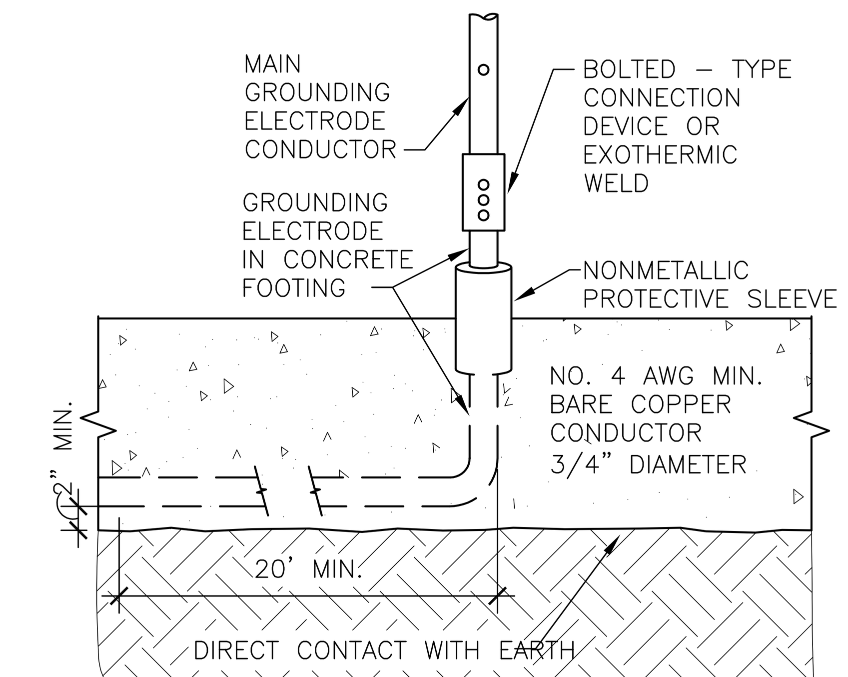

UFER GROUNDING SYSTEM

12 / E-2.1

SCALE: NOT TO SCALE

TENANT ELECTRICAL RESPONSIBILITIES

1. INSTALL AND LOAD ALL REGISTERS.
2. INSTALL AND CHECK MANAGER'S EQUIPMENT.
3. MOUNT SPENCER POS LOOP PANEL IN MANAGER'S
4. IDENTIFY AND TERMINATE ALL POS WIRE.
5. INSTALL AND TEST TIME CLOCK.
6. CONNECT AND TERMINATE MODEM AND/OR VSAT LINES.
7. BUILD MANAGER'S COMPUTER CABINET.
8. DRILL HOLES IN MANAGER'S COUNTER AS NEEDED.
9. TIE UP ALL LOOSE WIRES.
10. INSTALL AND TEST PHARMACY COMPUTER EQUIPMENT.
11. CUT HOLE IN LASER PRINTER CABINET.
12. TEST AND CONNECT COMMUNICATIONS LINES TO MODEMS.
13. TERMINATE AND/ OR CONNECT SATELLITE LINES.
14. MOUNT ALL TYPE 1 FACE PLATES AND LOOP ATTACHMENT BOXES UNDER THE PHARMACY AND FRONT CHECKOUTS.
15. INSTALL ALL PHONE BRACKETS.

PANEL SIZE LEGEND

PANEL "MDP" = 89-1/4"H X 31"W 11-1/2"D
PANEL "A" = 49-1/2"H X 20"W 5-3/4"D
PANEL "A" (2ND SECTION) = 31-1/2"H X 20"W 5-3/4"D
PANEL "B" = 43-1/2"H X 20"W 5-3/4"D
PANEL "B" (2ND SECTION) = 31-1/2"H X 20"W 5-3/4"D
PANEL "C" = 37-1/2"H X 20"W 5-3/4"D
PANEL "D" = 37-1/2"H X 20"W 5-3/4"D

MECHANICAL EQUIPMENT ELECTRICAL CONNECTION SCHEDULE

ITEM NO.	DESCRIPTION	VOLTS	PH	KW	HP	MCA	CIRCUIT	FEEDER	DISCONNECT SWITCH SIZE	PL	FUSE	FEATURES	REMARKS
1	AHU-1 (MEZZANINE)	208	3			14.2	MDP-1,3,5	3#10, 1#10G - 3/4" C.	30	3	20		DISCONNECT SWITCH SCHEDULED WITH UNIT.
2	CU-1 (1ST FLR-OUTSIDE)	208	3			41.2	MDP-7,9,11	3#4, 1#8G - 1 1/4" C.	60	3	50		DISCONNECT SWITCH SCHEDULED WITH UNIT.
3	AHU-2 (MEZZANINE)	208	3			14.2	MDP-13,15,17	3#10, 1#10G - 3/4" C.	30	3	20		DISCONNECT SWITCH SCHEDULED WITH UNIT.
4	CU-2 (1ST FLR-OUTSIDE)	208	3			41.2	MDP-19,21,23	3#4, 1#8G - 1 1/4" C.	60	3	50		DISCONNECT SWITCH SCHEDULED WITH UNIT.
5	AHU-3 (MEZZANINE)	208	3			14.2	MDP-25,27,29	3#10, 1#10G - 3/4" C.	30	3	20		DISCONNECT SWITCH SCHEDULED WITH UNIT.
6	CU-3 (LOWER ROOF)	208	3			41.2	MDP-31,33,35	3#4, 1#8G - 1 1/4" C.	60	3	50		DISCONNECT SWITCH SCHEDULED WITH UNIT.
7	AHU-4 (MEZZANINE)	208	3			14.2	MDP-37,39,41	3#10, 1#10G - 3/4" C.	30	3	20		DISCONNECT SWITCH SCHEDULED WITH UNIT.
8	CU-4 (LOWER ROOF)	208	3			22.9	MDP-43,45,47	3#8, 1#10G - 1" C.	60	3	40		DISCONNECT SWITCH SCHEDULED WITH UNIT.
9	AHU-5 (MEZZANINE)	208	3			14.2	MDP-38,40,42	3#10, 1#10G - 3/4" C.	30	3	20		DISCONNECT SWITCH SCHEDULED WITH UNIT.
10	CU-5 (LOWER ROOF)	208	3			22.9	MDP-44,46,48	3#8, 1#10G - 1" C.	60	3	40		DISCONNECT SWITCH SCHEDULED WITH UNIT.
11	EF-1 & EF-2	120	1			0.6	A-12(PART)	2#12 & 1#12G - 1/2" C.	30	2	15		SWITCH WITH LIGHTS
12	WH-1 (JANITOR)	208	1			30	D-2,4	2#10& 1#10G - 3/4" C.	30	2	30		PROVIDE LOCKABLE CIRCUIT BREAKER

ELECTRICAL LEGEND NOTES (RISER DIAGRAM ONLY):

1. 208V/120V POWER COMPANY POLE OR PAD MOUNTED TRANSFORMER. COORDINATE SERVICE REQUIREMENTS WITH LOCAL POWER COMPANY PRIOR TO ANY WORK.
2. ELECTRICAL SERVICE ENTRANCE EQUIPMENT. COORDINATE METERING REQUIREMENTS WITH LOCAL POWER COMPANY PRIOR TO ANY WORK. REFER TO E-1.2 FOR LOCATION OF ELECTRICAL SERVICE ENTRANCE EQUIPMENT.
3. PROVIDE 3 SETS 4# 350 KCMIL - 4"C.
4. PROVIDE 1#2/0G - 1" C. TO 3/4" DIAMETER x 10'-0" LONG GROUND ROD, UNDERGROUND METAL WATER PIPE, AND BUILDING STEEL. GROUNDING WITHIN 5' OF POE OF BUILDING. PROVIDE UFER GROUND RE: 12/E-2.1.
5. PROVIDE 48" W x 96" H x 3/4" D PLYWOOD BACKBOARD. ATTACH BACKBOARD TO WALL FOR SUPPORT OF TELEPHONE AND ALARM SYSTEMS INCLUDING QUADRAPLEX RECEPTACLES.
6. PROVIDE 1#6G - 3/4"C. TO BUILDING GROUND. PROVIDE 10' SLACK CABLE AT BACKBOARD.
7. PROVIDE 4#4/0 & 1#4G, 2-1/2"C.
8. PROVIDE 4#1 & 1#6G & 1#6 IG, 2"C.
9. PROVIDE 3 SETS 4# 350 KCMIL & 2/0G & 1#2/0 IG, 4"C.
10. INSTALL ENERGY MANAGEMENT SYSTEM RELAY CABINET AND BRANCH WIRING THROUGH RELAYS. PROVIDE SWITCH AT EMS PANEL TO CONTROL (OVERRIDE EMS) LIGHTING AND WATER HEATER CIRCUITS.
11. PROVIDE 800A/3P BREAKER, 10 KAIC, SUITABLE FOR USE AS SERVICE ENTRANCE, NEMA 4.
12. 2 - 4" SCHEDULE 80 PVC TELEPHONE CONDUITS, REFER TO CIVIL UTILITY PLAN FOR FURTHER DETAILS.
13. MAKE CONNECTION OF LOW VOLTAGE ALARM WIRING WITH ENERGY MANAGEMENT RELAY CABINET. VERIFY IN FIELD WITH CVS PROJECT MANAGER.
14. 1/2" C TO FIRE ALARM CONTROL PANEL.
15. MOUNT LOW VOLTAGE WIRING CABINET ON PLYWOOD BACKBOARD.
16. PROVIDE 3 SETS 4# 350 KCMIL & 2/0G & 1#2/0 IG, 4"PVC. (UNDERGROUND)

TOTAL CONNECTED LOAD: 149.5 KVA
OR 415.3 A
PROVIDE 800A SERVICE AT 120/208-3 PHASE.

GENERAL NOTES:

1. AVAILABLE FAULT CURRENTS ARE SHOWN AS 3PH.,LINE TO LINE.
2. PROVIDE COMPATIBLE OVERCURRENT DEVICES IN ALL 208Y/120V, 3PH, 4W PANELBOARDS WITH UL LISTED SERIES RATING IN COMBINATION WITH MAIN DISCONNECT CIRCUIT BREAKERS IN MAIN PANELBOARD "MDP". (NOT APPLICABLE)
3. PROVIDE MANUFACTURER'S SERIES RATED LABELING AS REQUIRED BY THE NATIONAL ELECTRICAL CODE 110-22. (NOT APPLICABLE)

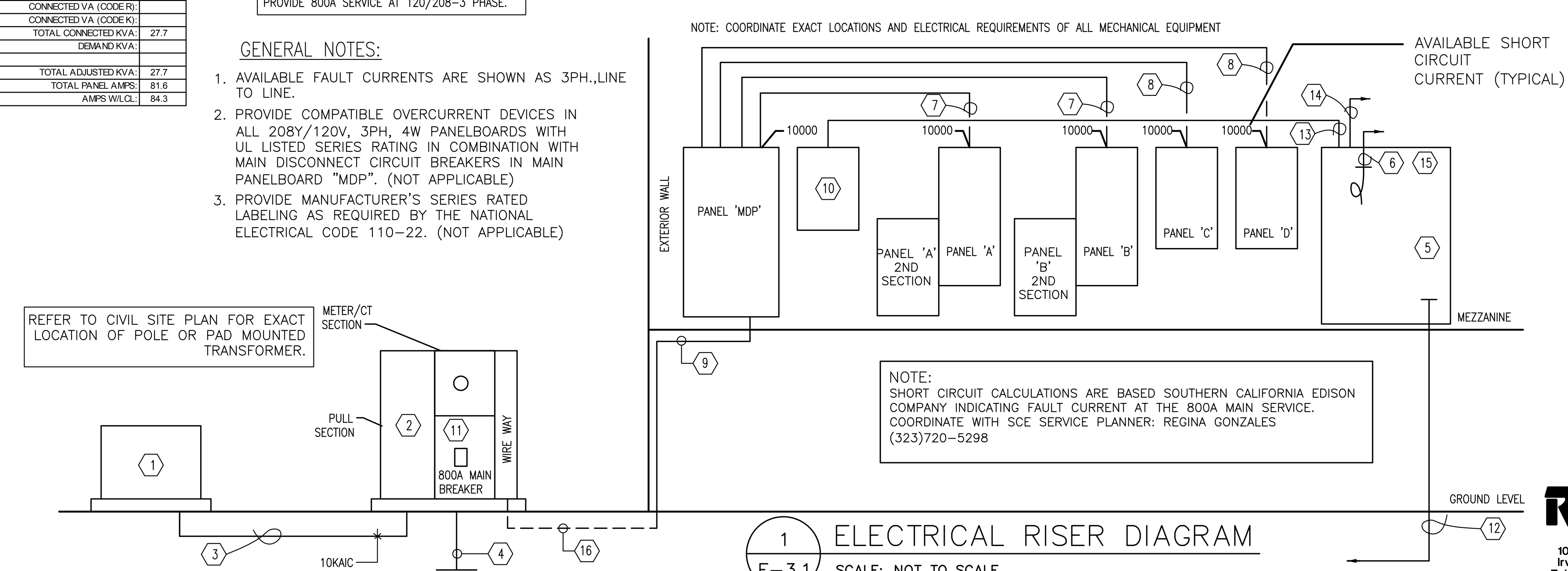

ELECTRICAL RISER DIAGRAM

1 / E-3.1

SCALE: NOT TO SCALE

RPM
Engineers, Inc.
102 DISCOVERY
Irvine, Ca. 92618
Tel: 949-450-1229
Fax: 949-450-1454
Contact: Lan Nguyen ext. 203
e-mail: lann@rpmpe.com

ROBERT KUBICEK
Architects And Associates, Inc.
18662 MacArthur Blvd.
Ste.200
Irvine, California 92612
(949) 798-3838
www.rkaa.com

REGISTERED PROFESSIONAL ENGINEER
LAN V. NGUYEN
No. 015596
Exp.12-31-2011
ELECTRICAL
STATE OF CALIFORNIA

date:

COPYRIGHT , ALL RIGHTS RESERVED. ROBERT KUBICEK ARCHITECTS AND ASSOC, INC. THIS DRAWING IS AN INSTRUMENT OF SERVICE. IT IS THE PROPERTY OF ROBERT KUBICEK ARCHITECTS AND ASSOC, INC. AND MAY NOT BE REPRODUCED, OR REPRODUCTION HERE OF USED, WITHOUT WRITTEN PERMISSION OF THE ARCHITECT.

01/06/11	CHATTEL ARCH. SUBMITTAL
01/10/11	PLAN CHECK CORRECTIONS
01/27/11	CHATTEL ARCH. SUBMITTAL

NOTICE OF ALTERNATE BILLING OR PAYMENT CYCLE: THIS CONTRACT MAY ALLOW THE OWNER TO REQUIRE THE SUBMISSION OF BILLINGS OR ESTIMATES IN BILLING CYCLES OTHER THAN THIRTY DAYS. THIS CONTRACT MAY ALLOW THE OWNER TO MAKE PAYMENT ON SOME ALTERNATIVE SCHEDULE AFTER CERTIFICATION AND APPROVAL OF BILLING AND ESTIMATES. A WRITTEN DESCRIPTION OF SUCH OTHER BILLING AND/OR CYCLE APPLICABLE TO THE PROJECT IS AVAILABLE FROM THE OWNER AT THE OFFICES OF

OR HIS DESIGNATED AGENT SHALL PROVIDE THIS WRITTEN DESCRIPTION ON REQUEST

DEVELOPER:
CHARLES COMPANY
9034 W. SUNSET BLVD.
WEST HOLLYWOOD
CA 90069
TEL (310) 247-0900
FAX (310) 247-1525

CVS pharmacy
STORE #49557
909 S. ATLANTIC BLVD
LOS ANGELES, CA

design RKA
drawn RKA
check RKA

sheet E-3.1 of
job 09151

RPM# 10-282 01/27/11

For Service & Support call CPC's
CVS Account Project Manager
Call: (770) 425-2724
Reference CPC p/n 850-3050
www.cpcus.com

Control power input:
120 Vac, 60 Hz, single phase.

Upstream branch circuit protection (MCCB, 20 A max), field supplied, is required.

Type 1 enclosure.

⚠ CAUTION! ⚠

All power must be shut off prior to wiring, installation, or service.

More than one disconnect may be required to de-energize this panel.

Tighten all connections to recommened specifications before applying power.

Use recommended field conductor wire sizes. Copper conductors only.

Field conductor wire sizes 24–10 AWG for input terminals TB1. Tighten connections to 0.6 – 0.8 Nm.

Field conductor wire sizes 24–8 AWG for all TB2 and TB3 terminals except 4–01 thru 4–04. Tighten connections to 1.5 – 1.8 Nm.

Field conductor wire sizes 20–6 AWG for TB2 and TB3 terminals 4–01 thru 4–04. Tighten connections to 1.5 – 1.8 Nm.

Contactor rating:

Maximum short circuit current 5 KA rms symmetrical, 120/240V, for all lighting contactor/power .circuits

C1a–C2b and C4a–C7a :
20A Tungsten / Ballast Lamps

Upstream branch circuit protection (MCCB, 20A Max.), field supplied, is required for each lighting circuit.

C3a :
40A General Purpose

Upstream branch circuit protection (MCCB, 40A Max.), field supplied, is required for each power circuit.

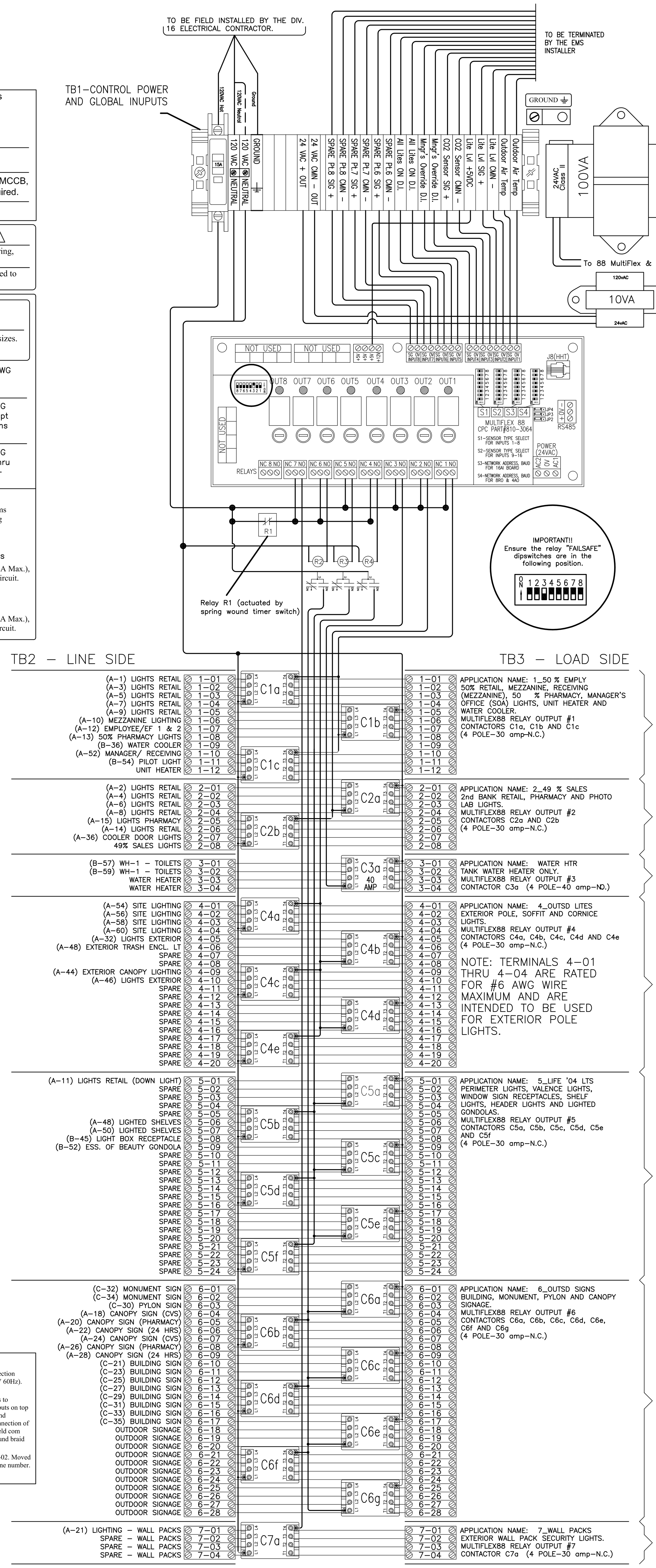

These 12 terminals (TB3:1–01 THRU TB3: 1–12) are designated for the first half of interior lighting and operate to a time schedule only. These are the only lights activated by the system occupancy override pushbutton.

These 8 terminals (TB3: 2–01 thru TB3: 2–08) are designated for the second half of interior lighting and operate to a time schedule only. These lights ARE NOT activated by the system occupancy override pushbutton.

These 4 terminals (TB3: 3–01 thru TB3: 3–04) are designated for the water heaters and are operated to a time schedule only. This contactor (C3a) is 40amp – N.O. – general purpose and is not rated for lighting loads.

These 20 terminals (TB3: 4–01 thru TB3: 4–20) are designated for exterior site and building lighting to include pole lights, cornice lights and soffit lights and operate to a combination of the outdoor photo sensor and a time schedule.

These 24 terminals (TB3: 5–01 thru TB3: 5–24) are designated for the "Life '04" lighting fixtures and are operated to a time schedule only. These lights ARE NOT activated by the system occupancy override pushbutton.

These 28 terminals (TB3: 6–01 thru TB3: 6–28) are designated for the exterior building signs and operate to a combination of the outdoor photo sensor and a time schedule.

These 4 terminals (TB3: 7–01 thru TB3: 7–04) are designated for the security "wall packs" and operate to the outdoor photo sensor only (ON from sunset to sunrise).

Revision History:
A - 1/21/2005 Initial Release
B - 5/9/2006 Added labeling per UL (branch circuit protection requirement, enclosure type 1, control power input 120V 60Hz). Reformated existing text into boxes.
C -8/7/2007 Updated per ECNP 07-0017. Added grounds to backplate for board power and com. Rotated board so inputs on top and close to terminal block. Rearranged terminal block and transformer locations for shorter wire runs. Removed connection of 485 to terminal block, added "com in" label at board. Field com wiring now lands on board at "com in". Added door ground braid connection.
D -8/22/2007 Removed InstaWater heater from circuit 3-02. Moved logo and updated revision history. Corrected service phone number. Per ECNP07-0019. Added revision "clouds".

1 EMS RELAY CABINET WIRING DIAGRAM
E–3.2 SCALE: NOT TO SCALE

GENERAL CONTRACTOR RESPONSIBILITIES

1. THE LOW VOLTAGE COMMUNICATIONS LOOP SHOWN IN THE ELECTRICAL PLANS. THE DIVISION 16 CONTRACTOR SHOULD INSTALL A #22TSP CABLE BETWEEN THE ROOFTOP UNITS AND THE CPC MAIN PANEL (EINSTEIN PANEL) AND ANY CONDUIT SHOWN ON THE ELECTRICAL DRAWINGS.

2. THE SIGNAL WIRE FOR THE MANAGER'S OVERRIDE BUTTON. THIS IS SHOWN ON THE ELECTRICAL PLANS.

3. THE LIGHTING CONTACTOR PANEL SHOWN IN THE ELECTRICAL PLANS. THIS IS PROVIDED BY CPC UNDER SEPARATE CONTRACT WITH THE JOB ELECTRICAL CONTRACTOR. THIS IS A SEPARATE ITEM THAT IS SPECIFIED AND PROVIDED UNDER THE DIVISION 16 PLANS AND SPECIFICATIONS.

4. TEMPORARY THERMOSTATS FOR THE ROOFTOP UNITS ARE PROVIDED BY THE HVAC CONTRACTOR. PLEASE BE CERTAIN THAT THESE TEMPORARY THERMOSTATS ARE MOUNTED IN THE PROPER LOCATIONS

5. ANY SMOKE DETECTORS, SMOKE DAMPERS, FIRE DAMPERS, OR ASSOCIATED INTERLOCK WIRING FOR THESE LISTED. THIS WORK IS SPECIFIED TO BE DONE BY THE DIVISION 16 CONTRACTOR.

6. ANY ELECTRIC ZONE DAMPERS OR CONTROLS FOR SAME (IF SHOWN ON THE MECHANICAL CONSTRUCTION DRAWINGS). THIS EQUIPMENT IS FURNISHED AND INSTALLED BY THE HVAC CONTRACTOR.

CH#	CHANNEL DESCRIPTION	"ON" EVENT	"OFF" EVENT
1	50% EMPLOYEE LIGHTS	"ON" AT 15 MINUTES PRIOR TO STORE OPENING	"OFF" AT 30 MINUTES AFTER STORE CLOSING
2	49% SALES LIGHTS	"ON" AT 5 MINUTES PRIOR TO STORE OPENING	"OFF" AT 15 MINUTES AFTER STORE CLOSING
3	WATER HEATERS	"ON" AT 1 HOUR PRIOR TO STORE OPENING	"OFF" AT STORE CLOSING
4	OUTSIDE LIGHTS	"ON" AFTER STORE OPENING { AND } WHEN LIGHT LEVEL < 35.0 FTC	"OFF" AT STORE CLOSING { OR } WHEN LIGHT LEVEL IS >45.0 FTC
5	LIFE '04 LIGHTS	"ON" AT STORE OPENING	"OFF" AT STORE CLOSING
6	OUTSIDE SIGNAGE	"ON" AFTER STORE OPENING { AND } WHEN LIGHT LEVEL < 30.0 FTC	"OFF" AT STORE CLOSING { OR } WHEN LIGHT LEVEL IS >40.0 FTC
7	WALL PACK LIGHTS	ACTIVE 24/7 – "ON" WHEN LIGHT LEVEL < 25.0 FTC	ACTIVE 24/7 – "OFF" WHEN LIGHT LEVEL > 35.0 FTC

Panel Dimensions: 22.25" Wide x 56" High x 6.5 Deep

ELECTRICAL (LOW VOLTAGE) WIRING NOTES:

(WORK OUTLINED BELOW SHALL BE THE RESPONSIBILITY OF THE DIVISION 16 ELECTRICAL CONTRACTOR, UNLESS SPECIFICALLY STATED OTHERWISE.)

LV–1 EACH HVAC UNIT HAS A 10 CONDUCTOR, 18 GAUGE THERMOSTAT CABLE RUNNING FROM THE LOW VOLTAGE TERMINAL STRIP IN THE UNIT, TO THE THERMOSTAT LOCATION, WITH A 15' LOOP OF WIRE COILED ABOVE THE DROP CEILING AT THE THERMOSTAT LOCATION. TEMPORARY THEMOSTAT AND CABLE (RESPONSIBILITY OF MECHANICAL CONTRACTOR) SHALL BE MOUNTED AT THE COLUMN LOCATIONS SHOWN ON THE DRAWINGS AND WIRED PROPERLY.

LV–2 ON "BUILT–UP" OR SPLIT SYSTEMS, THERE MUST BE A 10 CONDUCTOR, 18 GAUGE CABLE RUN BETWEEN ALL INDEPENDENT COMPONENTS (I.E. FROM AIR HANDLER TO DUCT FURNACE, FROM AIR HANDLER TO ECONOMIZER, ETC.)

LV–3 BELDEN 8641 OR EQUIVALENT 2 CONDUCTOR, 24 GAUGE SHIELDED CABLE SHALL BE PULLED FROM THE CPC LIGHTING RELAY PANEL (LEAVING A 5' LOOP) TO A RECESSED SINGLE GANG SWITCH BOX, LOCATED IN THE SOA, 30" DIRECTLY ABOVE THE SWITCH FOR THE OVERHEAD LIGHTS. CABLE TO BE LABELED "EMS O/R".

LV–4 BELDEN 8641 OR EQUIVALENT 2 CONDUCTOR, 24 GAUGE SHIELDED CABLE SHALL BE PULLED CONTINUOUS FROM THE CPC LIGHTING RELAY PANEL TO EACH HVAC UNIT IN TURN (DAISY CHAIN) STARTING WITH THE REAR–MOST UNIT. WIRE NEEDS TO BE PULLED INTO THE HVAC UNIT'S CONTROL PANEL NEAR THE THERMOSTAT WIRING TERMINAL STRIP, LEAVING APPROX. A 5 FOOT LOOP. LABEL BOTH ENDS OF THIS CABLE AS "EMS COMM".

LV–5 BELDEN 8641 OR EQUIVALENT 2 CONDUCTOR, 24 GAUGE SHIELDED CABLE SHALL BE PULLED FROM THE EMS PANEL TO THE ELECTRICAL SECTION OF THE REAR MOST HVAC UNIT. THIS CABLE IS TO BE LABELLED "OAT" (OUTSIDE AIR TEMPERATURE)

LV–6 BELDEN 8771 OR EQUIVALENT 3 CONDUCTOR, 22 GAUGE SHIELDED CABLE SHALL BE PULLED FROM THE EMS PANEL TO THE ELECTRICAL SECTION OF THE REAR MOST HVAC UNIT. THIS CABLE IS TO BE LABELLED "LIGHT LEVEL".

LV–7 BELDEN 8729 OR EQUIVALENT 4 CONDUCTOR, 22 GAUGE SHIELDED CABLE SHALL BE PULLED FROM THE EMS PANEL TO THE COLUMN NEAREST RTU1 (ADJACENT TO THE RTU1 T–STAT LOCATION). THIS CABLE IS TO BE LABELLED "CO2 SENSOR".

LV–8 ELECTRICAL CONTRACTOR SHALL COORDINATE WITH SECURITY CONTRACTOR AND WIRE SYSTEM COMPLETE.

LV–9 BELDEN 8641 OR EQUIVALENT SHALL BE RUN FROM THE CPC LIGHTING RELAY PANEL (LEAVE A 5' COIL) TO THE ALARM COMPANY'S HANDY BOX LABELED "EMS" (LEAVE A 5' COIL). LABEL THE CABLE "EMS ALARM INTERFACE". CPC (COMPUTER PROCESS CONTROLS) IS RESPONSIBLE FOR CONNECTION INSIDE THE HANDY BOX AND THE CPC LIGHTING RELAY PANEL.
CPC CONTACTS: CVS ACCT. PROJECT MANAGER 770–425–2724

IF THE HANDY BOX IS NOT ON SITE CONTACT THE APPROPRIATE VENDOR:
AFA = ART CANOLE @ 866–232–6285
ADT = MARY TOLOSKO @ 781–278–1777
GUARDIAN = MIKE EDWARDS @ 248–423–1000

LV–10 CABLE RUNS TO BE INSTALLED IN APPROPRIATELY SIZED CONDUIT, IF REQUIRED BY LOCAL CODE. LOCAL ELECTRICAL CODE REQUIREMENTS SHALL DETERMINE WHETHER CABLE SHALL BE INSTALLED IN CONDUIT, PLENUM CABLE, OR STANDARD PVC SHEATHED CABLE. DIVISION 16 CONTRACTOR IS RESPONSIBLE FOR MEETING LOCAL CODE REQUIREMENTS. IF CONDUIT IS REQUIRED, ALL EMS SYTEM SENSORS (EXCEPT OAT AND LIGHT LEVEL) WILL REQUIRE SINGLE GANG SWITCH BOXES MOUNTED AND PIPED AT THE APPROPRIATE LOCATIONS.

FOR PRICING, QUESTIONS AND INFORMATION RELATING TO THIS EMS PANEL CALL "EMERSON CLIMATE TECHNOLOGIES SOLUTIONS (CPC)" AT (800) 829–2724.

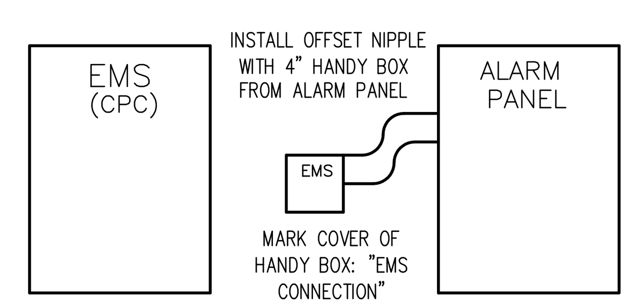

PROVIDE TO CPC A NORMALLY OPEN SET OF CONTACTS THAT CLOSES ON ALARM

2 BURGLAR ALARM / EMS CONNECTION
E–3.2 SCALE: NOT TO SCALE

SOUTHERN CALIFORNIA EDISON

Response to Letter of Request for Short Circuit Current Value

To: Cust Name Attn: Peter Jo

Address 102 Discovery, Irvine, CA 92618

Telephone:
Fax No:

From: Southern California Edison Company District/Division: Service Planning/Power Delivery

Address 1000 Potrero Grande

Monterey Park, CA 91755

Subject: Southern California Edison Company's Contribution to Short Circuit Current at the Point of Connection of the Company's Service Conductors to the Customer's Service Entrance Facilities.

Project: Name/Address

909 S Atlantic Blvd, Los Angeles CA 90022

The voltage to be utilized for this project will be 120/208 volts 3 phase 4 wire, to serve your 800 ampere main switch.

The Edison Company's maximum contribution to Short Circuit Current, at the time of calculation, based on Edison Company's demand factors for transformer sizing, will be approximately 10,000 amperes

PLANNER Regina M. Gonzales DATE 12/20/10

Telephone No. 323-720-5298

cc: Division Engineering

GENERAL ELECTRICAL NOTES

1. PERFORM ALL ELECTRICAL WORK IN ACCORDANCE WITH THE LATEST EDITION OF THE NATIONAL ELECTRICAL CODE AND ALL LOCAL AND STATE CODES.
2. PROVIDE ALL NEW MATERIAL THAT CONFORM'S TO THE STANDARDS OF THE UNDERWRITER'S LABORATORIES, INC., AND THE NATIONAL MANUFACTURERS ASSOCIATION.
3. OBTAIN AND PAY FOR ALL ELECTRICAL PERMITS AND INSPECTION FEES.
4. DRAWINGS ARE DIAGRAMMATIC ONLY AND INDICATE ONLY THE GENERAL ARRANGEMENT. SEE ARCHITECTURAL DRAWINGS FOR EXACT DIMENSIONS.
5. GUARANTEE ALL WORK AND MATERIALS FOR ONE YEAR EFFECTIVE THE DAY THE PROJECT IS ACCEPTED BY THE OWNER.
6. MAKE ALL ELECTRICAL POWER CONNECTIONS TO HVAC, PLUMBING AND OTHER EQUIPMENT AS REQUIRED.
7. PROVIDE AND INSTALL A COMPLETE GROUNDING SYSTEM IN ACCORDANCE WITH ARTICLE 250 OF THE N.E.C. AND AS SHOWN ON THE DRAWINGS.
8. PROVIDE THE CUTTING AND PATCHING OF WALLS AND FLOORS REQUIRED FOR THE INSTALLATION OF ELECTRICAL EQUIPMENT.
9. PROVIDE ONLY COPPER CONDUCTORS RATED AT NOT LESS THAN 600 VOLTS. PROVIDE #12 AWG MINIMUM, UNLESS OTHERWISE NOTED ON THE DRAWINGS. PROVIDE STRANDED CONDUCTORS FOR ALL WIRE #8 AWG AND LARGER. PROVIDE SOLID CONDUCTORS #10 AND SMALLER, UNLESS OTHERWISE NOTED.
10. PROVIDE BRANCH CIRCUIT CONDUCTORS THAT ARE TYPE THHN OR THWN AS REQUIRED. MC CABLE CAN BE USED FOR LIGHT FIXTURE TO LIGHT FIXTURE.
11. PROVIDE A PULL WIRE IN ALL EMPTY CONDUITS.
12. PROVIDE A TYPED DIRECTORY IN ALL PANEL BOARDS CLEARLY DESCRIBING THE LOCATION OF AND TYPE OF LOAD BEING SERVED FOR ALL CIRCUITS.
13. PROVIDE ENGRAVED PHENOLIC NAMEPLATES FOR ALL PANEL BOARDS AND DISCONNECT SWITCHES, WHITE LETTERS ON BLACK BACKGROUND.
14. VERIFY ALL REQUIREMENTS AND COORDINATE EXACT LOCATION OF INCOMING ELECTRICAL SERVICE WITH LOCAL POWER COMPANY PRIOR TO PROJECT START UP. NOTIFY ENGINEER OF ANY CHANGES.
15. PROVIDE, PROPERLY INSTALL, AND IDENTIFY ALL TERMINALS, SPLICING CONNECTORS, LUGS, ETC. FOR USE WITH THE MATERIAL (CU) OF THE CONDUCTOR, AND RATED FOR 60/75°C.
16. PROTECT ALL ELECTRICAL EQUIPMENT FROM FOREIGN MATERIAL DURING CONSTRUCTION (PAINT, SPACKLE, ETC.).
17. WHERE PENETRATIONS ARE MADE THROUGH A REQUIRED FIRE–RESISTIVE WALL, FLOOR, OR PARTITION FOR THE PURPOSE OF RUNNING RACEWAY CARRYING ELECTRICAL, TELEPHONE, TELEVISION, OR LOCAL COMMUNICATION AND/OR SIGNALING CIRCUITS, PROVIDE FIRE STOPPING AROUND THE OPENING OF THE RACEWAY PER THE STATE BUILDING CODE. MAINTAIN COORDINATION WITH THE GENERAL CONTRACTOR TO INSURE THAT THIS FIRE STOPPING IS ACCOMPLISHED. USE APPROVED ASSEMBLIES SUCH AS THE FOLLOWING: CONDUIT PENETRATIONS OF 1 & 2 HOUR GYP BOARD WALLS – U.L.#WL1001, CONDUIT PENETRATIONS OF 1 & 2 HOUR CONCRETE OR BLOCK WALLS – U.L.#CAJ1001, CONDUIT PENETRATIONS OF 1 & 2 HOUR CONCRETE FLOORS – U.L.#CAJ1001.
18. PROTECT REQUIRED FIRE RATED WALLS, PARTITIONS, AND OPENINGS FOR INSTALLATION OF BOXES THAT ARE GREATER THAN 16 SQUARE INCHES AS REQUIRED BY U.L. COORDINATE CLOSELY WITH THE GENERAL CONTRACTOR TO INSURE THE INTEGRITY OF THE U.L. RATING IS MAINTAINED.
19. PROVIDE CONDUIT FOR ALL WIRING, INCLUDING BUT NOT LIMITED TO CONTROL AND POWER WIRING. COORDINATE INSTALLATION AND ROUTING REQUIREMENTS WITH APPROPRIATE INSTALLER(S).
20. INSTALL WIRING IN GALVANIZED RIGID METAL CONDUIT, ELECTRICAL METAL TUBING, RIGID NON–METALLIC CONDUIT, FLEXIBLE METAL CONDUIT AND LIQUID–TIGHT FLEXIBLE METAL CONDUIT. EMT SHALL NOT BE USED IN OR UNDER CONCRETE SLABS OR IN MASONRY WALLS. USE SCHEDULE 40 PVC OUTDOORS WHERE NOT SUBJECT TO PHYSICAL DAMAGE. CONDUIT MAY BE SUBSTITUTED BY METAL–CLAD (MC) CABLE PER NEC ARTICLE #334 AND AS ALLOWED BY THE LOCAL AUTHORITY HAVING JURISDICTION. METAL–CLAD OR CABLE SHALL NOT BE USED FOR HOME RUNS.

RPM
Engineers, Inc.
102 DISCOVERY
Irvine, Ca. 92618
Tel: 949-450-1229
Fax: 949-450-1454
Contact: Lan Nguyen ext. 203
e-mail: lann@rpmpe.com

ROBERT KUBICEK Architects And Associates, Inc.
18662 MacArthur Blvd. Ste.200
Irvine, California 92612
(949) 798-3838
www.rkaa.com

REGISTERED PROFESSIONAL ENGINEER LAN V. NGUYEN No. 015596 Exp.12–31–2011 ELECTRICAL STATE OF CALIFORNIA

date:

COPYRIGHT , ALL RIGHTS RESERVED. ROBERT KUBICEK ARCHITECTS AND ASSOC, INC. THIS DRAWING IS AN INSTRUMENT OF SERVICE. IT IS THE PROPERTY OF ROBERT KUBICEK ARCHITECTS AND ASSOC, INC. AND MAY NOT BE REPRODUCED, OR REPRODUCTION HERE OF USED, WITHOUT WRITTEN PERMISSION OF THE ARCHITECT.

△	01/06/11	CHATTEL ARCH. SUBMITTAL
△	01/10/11	PLAN CHECK CORRECTIONS
△	01/27/11	CHATTEL ARCH. SUBMITTAL

NOTICE OF ALTERNATE BILLING OR PAYMENT CYCLE: THIS CONTRACT MAY ALLOW THE OWNER TO REQUIRE THE SUBMISSION OF BILLINGS OR ESTIMATES IN BILLING CYCLES OTHER THAN THIRTY DAYS. THIS CONTRACT MAY ALLOW THE OWNER TO MAKE PAYMENT ON SOME ALTERNATIVE SCHEDULE AFTER CERTIFICATION AND APPROVAL OF BILLING AND ESTIMATES. A WRITTEN DESCRIPTION OF SUCH OTHER BILLING AND/OR CYCLE APPLICABLE TO THE PROJECT IS AVAILABLE FROM THE OWNER AT THE OFFICES OF

OR HIS DESIGNATED AGENT SHALL PROVIDE THIS WRITTEN DESCRIPTION ON REQUEST

DEVELOPER:
CHARLES COMPANY
9034 W. SUNSET BLVD.
WEST HOLLYWOOD
CA 90069
TEL (310) 247-0900
FAX (310) 247-1525

CVS pharmacy
STORE #49557
909 S. ATLANTIC BLVD
LOS ANGELES, CA

design **RKA**
drawn **RKA**
check **RKA**

sheet **E-3.2** of
job **09151**

RPM# 10–282 01/27/11