ANALYSIS

This ordinance repeals those provisions of Title 26 - Building Code of the Los Angeles County Code, which had incorporated portions of the 2007 Edition of the California Building Code by reference and replaces them with provisions incorporating portions of the 2010 California Building Code, published by the California Building Standards Commission, by reference, with certain changes and modifications.

State law requires that the County's Building Code contain the same requirements as are contained in the building standards published in the most recent edition of the California Building Code. State law allows the County to change or modify these requirements only if it determines that such changes or modifications are reasonably necessary because of local climatic, geological, or topographical conditions.

The changes and modifications to requirements contained in the building standards published in the 2010 California Building Code which are contained in this ordinance are based upon express findings, contained in the ordinance, that such changes are reasonably necessary due to local climatic, geological, or topographical conditions.

This ordinance also makes certain modifications to the administrative provisions of Title 26 and to certain chapters of Title 26 that relate to subjects not covered by the California Building Code.

ANDREA SHERIDAN ORDIN
County Counsel

By
MARK T. YANAI
Principal Deputy County Counsel
Property Division

MTY:vn

07/08/10 (Requested)

10/19/10 (Revised)

HOA.738871.4

ORDINANCE NO. 2010-0053

An ordinance amending Title 26 - Building Code of the Los Angeles County Code by adopting the 2010 California Building Code by reference, with certain changes and modifications, and making other revisions thereto.

The Board of Supervisors of the County of Los Angeles ordains as follows:

SECTION 1. Sections 120 through 132 of Chapter 1, Chapters 2 through 35, Appendices C, I, and J and Appendix Chapter A1, which incorporate by reference and modify portions of the 2007 California Building Code, and Chapters 64, 71 and 98, are hereby repealed.

SECTION 2. Chapter 1 is hereby amended to read as follows:

100 ADOPTION BY REFERENCE

Except as hereinafter changed or modified, Sections ~~102~~1.2 through ~~114~~1.14 of Chapter 1 of Division I of that certain building code known and designated as the ~~2007~~2010 California Building Code, as published by the California Building Standards Commission, ~~and~~ are adopted by reference and incorporated into this Title 26 of the Los Angeles County Code as if fully set forth below, and shall be known as Sections ~~120~~119.1.2 through ~~132~~119.1.14, respectively of Chapter 1 of Title 26 of the Los Angeles County Code.

Except as hereinafter changed or modified, Chapters 2 through 35 (including Chapter 7A), Appendices C, I, and J ~~and Appendix Chapter A1~~ of that certain building code known and designated as the ~~2007~~2010 California Building Code, as published by the California Building Standards Commission, ~~and~~ are adopted by reference and

incorporated into this Title 26 of the Los Angeles County Code as if fully set forth below, and shall be known as Chapters 2 through 35, Appendices C, I, and J ~~and Appendix Chapter A1~~ of Title 26 of the Los Angeles County Code.

A copy of said California Building Code, hereinafter referred to as the CBC, including the above-designated appendices, shall be at all times maintained by the Building Official for use and examination by the public.

101 TITLE, PURPOSE, AND INTENT

. . .

101.2 Purpose and Intent.

The purpose of this Code is to provide minimum standards to preserve the public ~~peace,~~ health, ~~and~~ safety, and general welfare by regulating the design, construction, installation, quality of materials, use, occupancy, location, and maintenance of all buildings, structures, grading, and certain equipment as specifically set forth herein. Consistent with this purpose, the provisions of this Code are intended and always have been intended to confer a benefit on the community as a whole and are not intended to establish a duty of care toward any particular person.

. . .

101.3 Scope.

The provisions of this Code shall apply to the construction, alteration, moving, demolition, repair, use of any building or structure, and grading within the unincorporated territory of the County of Los Angeles and to such work or use by the

County of Los Angeles in any incorporated city~~ not exercising jurisdiction over such work or use~~.

The provisions of this ~~c~~Code shall not apply to work located primarily in a public way other than pedestrian protection structures required by Chapter 33; public utility towers and poles; certain governmental agencies, special districts, and public utilities as determined by the ~~b~~Building ~~o~~Official; equipment not specifically regulated in this Code; hydraulic flood control structures; ~~work exempted by Section 106;~~ or minor work of negligible hazard to life specifically exempted by the ~~b~~Building ~~o~~Official.

. . .

~~Where, in any specific case, different sections of this Code specify different materials, methods of construction or other requirements, the most restrictive shall govern. Where there is a conflict between a general requirement and a specific requirement, the specific requirement shall be applicable.~~

Detached one- and two-family dwellings and multiple single-family dwellings (townhouses) not more than three stories above grade plane in height with separate means of egress and their accessory structures shall comply with Title 30 - Residential Code.

. . .

101.4 Applicability.

101.4.1 Internal Conflict. Where there is a conflict between a general requirement and a specific requirement, the specific requirement shall be applicable. Where, in any specific case, different Sections of this Code specify different

materials, methods of construction, or other requirements, the most restrictive shall govern.

101.4.2 Other Laws. The provisions of this Code shall not be deemed to nullify any provisions of local, state, or federal law.

101.4.3 Codes and References. The provisions of the codes and standards referenced in this Code shall be considered part of the requirements of this Code to the prescribed extent of each such reference. Where there are conflicts between provisions of this Code and the provisions of any referenced code or standard, the provisions of this Code shall apply.

102 UNSAFE BUILDINGS

102.1 Definition. All buildings or structures which are structurally unsound or not provided with adequate egress, or which constitute a fire hazard, or are otherwise dangerous to human life, or which in relation to existing use constitute a hazard to safety or health, or public welfare, by reason of inadequate maintenance, dilapidation, obsolescence, fire hazard, disaster damage, or abandonment as specified in this Code or any other effective ordinance, are, for the purpose of this Chapter, unsafe buildings. Whenever the Building Official determines by inspection that a building or structure, whether structurally damaged or not, is dangerous to human life by reason of being located in an area which is unsafe due to hazard from landslide, settlement, or slippage or any other cause, such building shall, for the purpose of this Chapter, be considered an unsafe building.

. . .

103 VIOLATIONS AND PENALTIES

. . .

103.4 Recordation of Violation.

103.4.1 General. The Building Official may record a notice with the County Recorder's Office that a property, building, or structure, or any part thereof, is in violation of any provision of this Code provided that the provisions of this Section are complied with. The remedy provided by this Section is cumulative to any other enforcement actions permitted by this Code.

103.4.2 Recordation. If (1) the Building Official determines that any property, building, or structure, or any part thereof is in violation of any provision of this Code; and if (2) the Building Official gives written notice as specified below of said violation; ~~and if (3) within 45 days of said notice, the property, or buildings, or structures thereon are not brought into compliance with this Code,~~ then the Building Official may have sole discretion to, at any time thereafter, record with the County Recorder's Office a notice that the property and/or any building or structure located thereon is in violation of this Code.

103.4.3 Notice. The written notice given pursuant to this Section shall indicate:

1. The nature of the violation(s); and

2. That if the violation is not remedied to the satisfaction of the Building Official ~~within 45 days~~, the Building Official may, at any time thereafter, record with the

County Recorder's Office a notice that the property and/or any building or structure located thereon is in violation of this Code.

The notice shall be posted on the property and shall be mailed to the owner of the property as indicated on the last equalized County Assessment roll. The mailed notice may be by registered, certified, or first-class mail.

~~The 45-day period for achieving compliance with this Code shall run from the date the property is posted or from the date of the mailing of the notice, whichever is later.~~

. . .

104 ORGANIZATION AND ENFORCEMENT

. . .

104.2 Powers and Duties of the Building Official.

104.2.1 General. The Building Official is hereby authorized and directed to enforce all the provisions of this Code, including the Electrical Code, the Plumbing Code, ~~and~~ the Mechanical Code, the Residential Code, and the Green Building Standards Code, and to make all inspections pursuant to the provisions of each such Code. For such purposes, the Building Official shall have the powers of a law enforcement officer.

The Building Official shall have the power to render interpretations of this Code and to adopt and enforce rules and supplemental regulations in order to clarify the application of its provisions. Such interpretations, rules, and regulations shall be in conformance with the intent and purpose of this Code.

The Building Official shall classify every building or portion thereof into one of the occupancies set forth in Chapter 3 of this Code according to its use or the character of its occupancy.

The Building Official shall also classify every building into one of the types of construction set forth in Chapter 6 of this Code.

. . .

104.2.3 Right of entry.

104.2.3.1 Whenever it is necessary to make an inspection to enforce any of the provisions of or perform any duty imposed by this Code or other applicable law, or whenever the Building Official or an authorized representative has reasonable cause to believe that there exists in any building or grading or upon any premises any condition which makes such building or grading or premises hazardous, unsafe, or dangerous for any reason specified in this Code or other similar law, the Building Official or an authorized representative hereby is authorized to enter such property at any reasonable time and to inspect the same and perform any duty imposed upon the Building Official by this Code or other applicable law; provided that (i) if such property ~~be~~is occupied, then the Building Official shall first present proper credentials to the occupant and request entry explaining the reasons therefor; and (ii) if such property ~~be~~is unoccupied, then the Building Official shall first make a reasonable effort to locate the owner or other persons having charge or control of the property and request entry, explaining the reasons therefor. If such entry cannot be obtained because the owner or other person having charge or control of the property cannot be found after due

diligence or if entry is refused, then the Building Official or an authorized representative shall have ~~some~~ recourse to every remedy provided by law to secure lawful entry and inspect the property.

104.2.3.2 Notwithstanding the foregoing, if the Building Official or an authorized representative has reasonable cause to believe that the building or grading or premises is so hazardous, unsafe, or dangerous as to require immediate inspection to safeguard the public health or safety, the Building Official shall have the right to immediately enter and inspect such property, and may use any reasonable means required to effect such entry and make such inspection, whether such property be occupied or unoccupied and whether or not permission to inspect has been obtained. If the property be occupied, the Building Official shall first present credentials to the occupant and demand entry, explaining the reasons therefor and the purpose of the inspection.

. . .

104.2.7 **Modifications.** Whenever there are practical difficulties involved in carrying out the provisions of this Code, the Building Official may grant modifications ~~for individual cases~~on a case by case basis, provided the Building Official shall first find that a special individual reason makes the strict letter of this Code impractical and that the modification is in conformity with the spirit and purpose of this Code and that such modification does not lessen any fire-protection or other life-safety-related requirements or any degree of structural integrity. The details of any action

granting modifications shall be recorded and entered in the files of the code enforcement agency.

. . .

104.2.8 Alternate ~~m~~Materials, ~~d~~Designs, and ~~m~~Methods of ~~c~~Construction.

The provisions of this ~~c~~Code are not intended to prevent the use of any material, appliance, installation, device, arrangement, design, or method of construction not specifically prescribed by this ~~c~~Code, provided any such alternate has been approved.

The ~~b~~Building ~~o~~Official may approve on a case by case basis, any such alternate, provided that he or she finds ~~that the proposed design is satisfactory and complies with the provisions of this code, and finds~~ that the material, appliance, installation, device, arrangement, design, or method of construction or work offered is, for the purpose intended, at least the equivalent of that prescribed in this ~~c~~Code in quality, strength, effectiveness, fire resistance, and other life-safety factors, durability, planning and design, energy, material resource efficiency and conservation, environmental air quality, performance, water, and sanitation.

. . .

104.2.9 Tests.

. . .

~~Copies of the results of all such tests shall be retained for a period of not less than two years after the acceptance of the structure.~~Reports of such test shall be

retained by the Building Official in accordance with the County's guidelines for the retention of public records.

. . .

104.3 Definitions.

. . .

FIRE DEPARTMENT shall mean the Los Angeles County Fire Department.

GREEN BUILDING STANDARDS CODE shall mean Title 31 of the Los Angeles County Code.

. . .

PLUMBING CODE shall mean Title 28 of the Los Angeles County Code.

RESIDENTIAL CODE shall mean Title 30 of the Los Angeles County Code.

. . .

105 APPEALS BOARDS

105.1 Building Board of Appeals.

105.1.1 General. Unless otherwise provided for below, in order to conduct the hearings provided for in this Code ~~and also to determine the suitability of alternate materials and types of construction and to provide for reasonable interpretations of the provisions of this Code~~, there shall be a Building Board of Appeals consisting of five members who are qualified by experience and training to pass upon matters pertaining to building construction. One member shall be a practicing architect, one a competent builder, one a lawyer, and two shall be structural engineers, each of whom shall have had at least 10 years' experience as an architect, builder, lawyer, or

structural engineer. The Building Official shall be an ex officio member and shall act as secretary to the ~~b~~Board. The members of the Building Board of Appeals shall be appointed by the Board of Supervisors and shall hold office at its pleasure. The Building Board of Appeals shall adopt reasonable rules and regulations for conducting its investigations. Each member of the Board shall be compensated for each meeting attended as provided from time to time by the County Code.

~~The Board shall establish that the approval for alternate materials and/or the modifications granted for individual cases are in conformity with the intent and purpose of this Code and that such alternate material, modification or method of work offered is at least the equivalent of that prescribed in this Code in quality, strength, effectiveness, fire resistance, durability, safety and sanitation and does not lessen any fire-protection requirements or any degree of structural integrity. The Building Board of Appeals shall document all decisions and findings in writing to the Building Official with a duplicate copy to the applicant, and the Board may recommend to the Board of Supervisors such new legislation as is consistent therewith. Each member of the Board shall be compensated for each meeting attended as provided from time to time by the County Code.~~

105.1.2 ~~Limitations~~Scope of authority.

Except as provided below, the Building Board of Appeals shall have the authority to hear appeals regarding any action of the Building Official, including actions taken by the Building Official in connection with Section 104.2.7 or Section 104.2.8. The Building

Board of Appeals shall also be authorized to recommend to the Board of Supervisors such new legislation as it deems appropriate.

The Building Board of Appeals shall have no authority relative to interpretation of the administrative portions of this Code, other than Section 102.~~1~~, nor shall the Board be empowered to waive requirements of this Code.

The Building Board of Appeals shall document all decisions and findings in writing to the Building Official with a duplicate copy to the applicant.

. . .

106 PERMITS

106.1 Permits Required. No person~~,~~ shall erect, construct, enlarge, alter, repair, move, improve, remove, connect, convert, demolish, or equip any building, structure, or portion thereof, or automatic fire protection system regulated by Chapter 9, perform any grading, or perform landscaping as regulated by Chapter ~~71~~2.7 of Division 2 of Title 23 of the California Code of Regulations (Model Water Efficient Landscape Ordinance) or perform landscaping on slopes requiring planting in conformance with Section J110, or cause the same to be done, without first obtaining a separate permit for each such building, structure, automatic fire protection system, grading, or landscaping from the Building Official.

. . .

106.2 Unpermitted Structures.

. . .

For the purposes of this Code, "Unpermitted Structure" shall be defined as any structure, or portion thereof, that was erected, constructed, enlarged, altered, repaired, moved, improved, removed, connected, converted, demolished, or equipped, at any point in time, without the required permit(s) having first been obtained from the Building Official, pursuant to ~~Subsection~~Section 106.1, ~~supra~~or any unfinished work for which a permit has expired.

106.3 Work Exempted.

. . .

7. Ground mounted ~~R~~radio and television antennae towers which do not exceed 45 feet (13,716 mm) in height and ground supported dish antennas not exceeding 15 feet (4,572 mm) in height above finished grade in any position.

. . .

11. Canopies or awnings, completely supported by the exterior wall, attached to a Group R-3 or U Occupancy and extending not more than 54 inches (1,372 mm) from the exterior wall of the building.

. . .

16. Prefabricated swimming pools and other bodies of water accessory to a Group R-3 Occupancy ~~in which the pool walls are entirely above the adjacent grade and if the capacity~~that are less than 18 inches deep, do~~es~~ not exceed 5,000 gallons (18,927 L), and are installed entirely above adjacent grade. ~~Fences, gates, door alarms, and other protection devices that are accessory to the prefabricated swimming pool are not exempt from permit requirements.~~

. . .

106.4 Application for Permits.

106.4.1 Application. To obtain a permit, the applicant shall first file an application ~~therefor~~ in writing on a form furnished for that purpose. Every such application shall:

. . .

2. Describe the land on which the proposed work is to be done, by lot, block, tract, and house and street address, or similar description that will readily identify and ~~definitely~~ locate the proposed building or work;

. . .

106.4.1.1 Expiration of Application. When no permit is issued within one year following the date of the application therefor, the application shall automatically expire. Plans and specifications previously submitted may thereafter be returned to the applicant or destroyed by the Building Official. ~~Prior to the expiration of an application, t~~The Building Official may grant up to two extensions not exceeding 180 days per extension, beyond the initial one-year limit upon written request by the applicant showing that circumstances beyond the control of the applicant have prevented action from being taken and upon the payment of an extension fee ~~equal~~as determined by the Building Official, not to exceed 25 percent of the plan check fee.

. . .

106.5 Permits.

. . .

106.5.4 Expiration.

. . .

Any permittee holding an unexpired permit may apply for an extension of time within which work may commence under that permit. The Building Official may extend the time for action by the permittee for a period not exceeding 180 days on written request and payment of a fee in an amount determined by the Building Official, ~~equal~~not to exceed 25 percent of the permit fee. No permit shall be extended more than twice.

. . .

106.5.6 Combined building permit. A combined building permit may be issued for new one-family or two-family dwellings and attached garages which will include all building, electrical, plumbing, heating, ventilating, and air-conditioning work, but will not include grading and landscape which require permits ~~under Chapter 71 or Appendix J~~pursuant to any provision of this Code; or sewer connections. The combined building permit shall be subject to the requirements of this Code, the Residential Code, the Electrical Code, the Plumbing Code, ~~and~~ the Mechanical Code, and the Green Building Standards Code, except that the fee for the combined building permit shall be as provided in Section 107.1 of this Code.

107 FEES

. . .

107.9 Other Fees.

. . .

14. For processing of ~~45-day~~ notice pursuant to Section 103.4 $423.90

. . .

109 USE AND OCCUPANCY

109.1 General. No building or structure or portion thereof shall be used or occupied, and no change in the existing occupancy classification of a building or structure or portion thereof shall be made until the Building Official has approved the building or structure or portion thereof for such use or occupancy as evidence by the issuance of a certificate of occupancy or a temporary certificate of occupancy. A building of Group R-1, R-2, R-2.1, ~~or Group~~ R-3, R-3.1, or R-4 Occupancy, if erected on a site where grading has been performed pursuant to a grading permit issued under provisions of this Code, shall not be occupied, nor shall gas or electric utilities be connected thereto, unless the grading has been completed in accordance with Appendix J or the Building Official has found, should the grading not be so completed, that the site conditions will pose no hazard to health, safety, or welfare of occupants and/or occupants of adjacent properties, and that a temporary certificate of occupancy has been issued.

. . .

109.5 Posting.

. . .

109.5.1 Live loads posted. A durable sign that indicates the "live load" shall be required in commercial or industrial buildings where the floor or roof or portion thereof is or has been designed with a live load that exceeds 50 psf. The live load sign shall be posted on that part of each story or roof to which it applies, in a

conspicuous place. The live load sign shall be posted as a condition precedent to the issuance of a certificate of occupancy. It shall be unlawful to remove or deface any such sign.

110 PROHIBITED USES OF BUILDING SITES

110.1 Flood Hazard.

110.1.1

. . .

The placement of the building and other structures (including walls and fences) on the building site shall be such that water or mud flow will not be a hazard to the building or adjacent property. Subject to the conditions of ~~Subsection~~Section 110.1.2, this prohibition shall not apply when provision is made to eliminate such hazard to the satisfaction of the Department of Public Works by providing adequate drainage facilities by protective walls, suitable fill, raising the floor level of the building, a combination of these methods, or by other means. The Department of Public Works, in the application of this ~~Subsection~~Section for buildings, structures, and grading located in whole or in part in flood hazard areas, shall enforce, as a minimum, the current Federal Flood Plain Management Regulations defined in Title 44, Code of Federal Regulations, Section 60.3~~.~~, and may require the applicant or property owner to provide the following information and/or comply with the following provisions:

1. Delineation of flood hazard areas, floodway boundaries and flood zones, and the design flood elevation, as appropriate;

2. The elevation of the proposed lowest floor, including basement, in areas of shallow flooding (AO Zones), and the height of the proposed lowest floor, including basement, above the highest adjacent grade;

3. The elevation of the bottom of the lowest horizontal structural member in coastal high hazard areas (V Zone);

4. If the design flood elevations are not included on the community's Flood Insurance Rate Map (FIRM), then the applicant shall obtain and reasonably utilize any design flood elevation and floodway data available from other sources, as approved by the Building Official; and

5. During construction, upon placement of the lowest floor, including basement, and prior to further vertical construction, the permittee shall provide to the Building Official documentation, prepared and sealed by a registered design professional, certifying the elevation of the lowest floor, including basement.

. . .

110.2 Geotechnical Hazards.

. . .

110.2.2 Except as provided in Section 110.2.3, work requiring a building or grading permit by this Code is not permitted in an area determined by the Building Official to be subject to hazard from landslide, settlement, or slippage. ~~These hazards include, but shall not be limited to, loose debris, slopewash and the potential for mud flows from natural slopes or graded slopes~~. For the purpose of this ~~s~~Section,

landslide, settlement, or slippage does not include surface displacement due to the earthquake faults.

. . .

110.2.3

. . .

110.2.3.1 When the applicant has submitted an engineering geology and/or soils engineering report or reports complying with the provisions of Section 111 such that said reports show to the satisfaction of the Building Official that the hazard will be eliminated prior to the use or occupancy of the land or structures~~ by modification of topography, reduction of subsurface water, buttressing, a combination of these methods, or by other means~~.

110.2.3.2 When the applicant has submitted ~~a geological~~an engineering geology and/or ~~geotechnical~~soils engineering report or reports~~,~~ that comply with the provisions of Section 111, and ~~contain sufficient data to show~~that demonstrate, to the satisfaction of the Building Official, that the site is safe for the intended use.

110.2.3.3

. . .

2. Record in the office of the Department of Registrar-Recorder, a statement that the owner is aware that the records of the Building Official indicate that the property is potentially subject to ~~a physical~~ hazard ~~of a geotechnical nature~~from landslide, settlement, or slippage.

3. Record in the office of the Department of Registrar-Recorder, an agreement relieving the County and all officers and employees thereof of any liability for any damage or loss which may result from issuance of such a permit. This agreement shall provide that it is binding on all successors in interest of the owner and shall continue in effect until the Building Official records in the office of the Department of Registrar-Recorder a statement that the Building Official has determined that such hazard from landslide, settlement or slippage no longer exists. The ~~R~~repair work shall consist of restoring the original construction. The Building Official may require that provisions be made in anticipation of future settlement. For the purposes of this Section 110.2.3.3, "alteration" does not include an addition or additions.

110.2.3.4

. . .

3. Record in the office of the Department of Registrar-Recorder an agreement relieving the County and all officers and employees thereof of any liability for any damage or loss which may result from the issuance of such a permit. This agreement shall provide that it is binding on all successors in interest of the owner and shall continue in effect until the Building Official records in the office of the Department of Registrar-Recorder a statement that the Building Official has determined that a hazard from landslide, settlement, or slippage no longer exists.

110.2.3.5 When the proposed work involves the repair of a single-family residence or accessory ~~buildings~~structures where the cost of such repair exceeds 25 percent of the current market value of the existing building. The scope of the repair

work shall be subject to the approval of the Building Official. Before a permit may be issued pursuant to this ~~s~~Section, the owner shall do all of the following:

. . .

2. Record in the office of the Department of Registrar-Recorder a statement by the owner acknowledging that the records of the Building Official indicate that the property is potentially subject to ~~a physical~~ hazard ~~of a geotechnical nature~~from landslide, settlement, or slippage.

3. Record in the office of the Department of Registrar-Recorder an agreement relieving the ~~c~~County and all officers and employees thereof of any liability for any damage or loss which may result from issuance of such a permit. This agreement shall provide that it is binding on all successors in interest of the owner and shall continue in effect until the Building Official records in the office of the Department of Registrar-Recorder a statement that the Building Official has determined that such hazard from landslide, settlement, or slippage no longer exists.

110.2.3.6 When the proposed work involves the replacement of structures destroyed by causes other than landslide, settlement, or slippage, and the permit applicant was the owner of the property at the time of the loss, their immediate heir(s), or their authorized representative, and the application for a permit under this Section is filed no later than ten (10) years following the date of the loss. The replacement structure(s) shall not exceed the area, number of stories, load, or number of fixtures and bedrooms of the structure that was destroyed. No change in occupancy

type shall be permitted. Before a permit may be issued pursuant to this ~~s~~Section, the owner shall do all of the following:

. . .

3. Record in the office of the Department of Registrar-Recorder a statement by the owner acknowledging that the owner is aware that the records of the Building Official indicate that the property is potentially subject to a ~~physical~~ hazard ~~of a geotechnical nature~~from landslide, settlement, or slippage.

4. Record in the office of the Department of Registrar-Recorder an agreement relieving the County and all officers and employees thereof of any liability for any damage or loss which may result from issuance of such a permit. This agreement shall provide that it is binding on all successors in interest of the owner and shall continue in effect until the Building Official records in the office of the Department of Registrar-Recorder a statement that the Building Official has determined that such hazard from landslide, settlement, or slippage no longer exists.

110.2.3.7

. . .

1. Record in the office of the Department of Registrar-Recorder a statement by the owner acknowledging that the owner is aware that the records of the Building Official indicate that the property is potentially subject to ~~a physical~~ hazard ~~of a geotechnical nature~~from landslide, settlement, or slippage.

2. Record in the office of the Department of Registrar-Recorder an agreement relieving the County and all officers and employees thereof of any liability for

any damage or loss which may result from issuance of such a permit. This agreement shall provide that it is binding on all successors in interest of the owner and shall continue in effect until the Building Official records in the office of the Department of Registrar-Recorder a statement that the Building Official has determined that such hazard from landslide, settlement, or slippage no longer exists.

110.2.3.8 When the Building Official determines that the hazard from landslide, settlement, or slippage is based solely on the fact that the area has been identified as a potentially liquefiable area in a seismic hazard zone (pursuant to Public Resources Code section 2690 et seq.) and a foundation investigation is performed in connection with the work in accordance with Section ~~1804~~1806 of this Code.

110.2.3.9 Notwithstanding any other provisions of this Section, the Building Official may, at his or her discretion, deny a permit for any building, structure, or grading subject to ~~a~~ hazard ~~of a geotechnical nature~~from landslide, settlement, or slippage, which cannot be mitigated and may endanger the health or safety of the occupants, adjoining property, or the public.

. . .

TABLE 1-F CODE ENFORCEMENT FEES

. . .

6.	For processing a 45-day letter (written notice)	$423.90
7.	For processing (recording) a Notice of Violation	$336.90

. . .

SECTION 3. Section 701A.1 is hereby amended to read as follows:

701A.1 **Scope.** This ~~c~~Chapter applies to building materials, systems, and/or assemblies used in the exterior design and construction of new buildings ~~located~~, and to additions, alterations, or repairs made to existing buildings, erected, constructed, or moved within a Wildland-Urban Interface Fire Area as defined in Section 702A.

SECTION 4. Section 701A.3 is hereby amended to read as follows:

701A.3. **Application.** New buildings, and any additions, alterations, or repairs made to existing buildings located in or moved within any Fire Hazard Severity Zone within State Responsibility Areas or any Wildland-Urban Interface Fire Area designated by the ~~enforcing agency~~Los Angeles County Fire Department constructed after the application date shall comply with the provisions of this ~~c~~Chapter.

EXCEPTIONS:

. . .

~~4. Additions to and remodels of buildings originally constructed prior to the applicable application date.~~

SECTION 5. Section 701A.3.1 is hereby amended to read as follows:

701A.3.1 **Application date and where required.** New buildings for which an application for a building permit is submitted on or after July 1, 2008, and any additions, alterations, or repairs made to existing buildings for which an application for a building permit is submitted on or after January 1, 2011, located in any Fire Hazard

Severity Zone or Wildland Interface Fire Area shall comply with all ~~s~~Sections of this ~~c~~Chapter, including all of the following areas:

. . .

EXCEPTIONS:

1. ~~New b~~Buildings located in any Fire Hazard Severity Zone within State Responsibility Areas, for which an application for a building permit is submitted on or after January 1, 2008, shall comply with all ~~s~~Sections of this ~~c~~Chapter.

2. ~~New b~~Buildings located in any Fire Hazard Severity Zone within State Responsibility Areas or any Wildland Interface Fire Area designated by cities and other local agencies for which an application for a building permit is submitted on or after December 1, 2005, but prior to July 1, 2008, shall only comply with the following ~~s~~Sections of this ~~c~~Chapter:

. . .

SECTION 6. Section 701A.4 is hereby amended to read as follows:

701A.4 Inspection and certification.

. . .

1. Building permit issuance. The ~~local b~~Building ~~o~~Official shall, prior to construction, provide the owner or applicant a certification that the building as proposed to be built complies with all applicable state and local building standards, including those for materials and construction methods for wildfire exposure as described in this ~~c~~Chapter. Issuance of a building permit by the ~~local b~~Building ~~o~~Official for the proposed building shall be considered as complying with this ~~s~~Section.

2. Building permit final. The ~~local b~~Building ~~o~~Official shall, upon completion of construction, provide the owner or applicant with a copy of the final inspection report that demonstrates the building was constructed in compliance with all applicable state and local building standards, including those for materials and construction methods for wildfire exposure as described in this ~~c~~Chapter. Issuance of a certificate of occupancy by the ~~local b~~Building ~~o~~Official for the proposed building shall be considered as complying with this ~~s~~Section.

SECTION 7. Section 702A is hereby amended to read as follows:

702A DEFINITIONS

. . .

FIRE PROTECTION PLAN is a document prepared for a specific project or development proposed for a Wildland-Urban Interface Fire Area. It describes ways to minimize and mitigate potential for loss from wildfire exposure.

The Fire Protection Plan shall be in accordance with this ~~c~~Chapter and the ~~California~~Los Angeles County Fire Code Title 32, Chapter ~~9~~49. When required by the enforcing agency for the purposes of granting modifications, a fire protection plan shall be submitted. ~~Only locally adopted ordinances that have been filed with the California Building Standards Commission or the Department of Housing and Community Development in accordance with Section 1.1.8 shall apply.~~

FIRE HAZARD SEVERITY ZONES are geographical areas designated pursuant to California Public Resources Codes ~~S~~sections 4201 through 4204 and classified as Very High, High, or Moderate in State Responsibility Areas or as Local Agency Very

High Fire Hazard Severity Zones designated pursuant to California Government Code ~~S~~sections 51175 through 51189. See ~~California~~Los Angeles County Fire Code, ~~Article 86~~Chapter 49.

. . .

WILDLAND-URBAN INTERFACE FIRE AREA is a geographical area identified by the state as a "Fire Hazard Severity Zone" in accordance with the Public Resources Code ~~S~~sections 4201 through 4204 and Government Code ~~S~~sections 51175 through 51189, or other areas designated by the ~~enforcing agency~~Los Angeles County Fire Department to be at a significant risk from wildfires. See Section 706A for the applicable referenced Sections of the Government Code and the Public Resources Code.

SECTION 8. Section 703A.2 is hereby amended to read as follows:

703A.2 Qualification by Testing. Material and material assemblies tested in accordance with the requirements of Section 703A shall be accepted for use when the results and conditions of those tests are met. Product evaluation testing of material and material assemblies shall be approved or listed by the State Fire Marshal, the Building Official, or identified in a current report issued by an approved agency.

SECTION 9. Section 703A.5.2 is hereby amended to read as follows:

703A.5.2 Weathering. Fire-retardant-treated wood ~~and fire-retardant-treated wood shingles and shakes~~ shall meet the fire test performance requirements of this ~~c~~Chapter after being subjected to the weathering conditions contained in the following standards, as applicable to the materials and the conditions of use.

SECTION 10. Section 703A.5.2.2 is hereby deleted in its entirety.

~~**703A.5.2.2 Fire-retardant-treated wood shingles and shakes.** Fire-retardant-treated wood shingles and shakes shall be approved and listed by the State Fire-Marshal in accordance with Section 208(c), Title 19 California Code of Regulations.~~

SECTION 11. Section 703A.6 is hereby amended to read as follows:

703A.6 Alternates for materials, design, tests, and methods of construction. The enforcing agency is permitted to modify the provisions of this ~~c~~Chapter for site-specific conditions in accordance with Chapter 1, Section ~~1.11.2.4~~104.2.7. When required by the ~~enforcing agency~~Building Official for the purposes of granting modifications, a fire protection plan shall be submitted in accordance with the ~~California~~Los Angeles County Fire Code, Chapter 49.

SECTION 12. Section 704A.3 is hereby amended to read as follows:

704A.3 Alternative methods for determining Ignition-resistant material.

. . .

~~3. Fire-retardant-treated wood shingles and shakes. Fire-retardant-treated wood shingles and shakes, as defined in section 1505.6 and listed by State Fire-Marshal for use as "Class B" roof covering, shall be accepted as an Ignition-resistant-wall covering material when installed over solid sheathing.~~

SECTION 13. Section 705A.2 is hereby amended to read as follows:

705A.2 Roof coverings.

Roof coverings shall be Class A as specified in Section 1505.2. Where the roof profile allows a space between the roof covering and roof decking, the spaces shall be constructed to prevent the intrusion of flames and embers, be firestopped with approved materials or have one layer of minimum 72 pound (32.4 kg) mineral-surfaced non-perforated cap sheet complying with ASTM D 3909 installed over the combustible decking. Wood shingles and wood shakes are prohibited in any Fire Hazard Severity Zones regardless of classification.

SECTION 14. Section 706A.3 is hereby amended to read as follows:

706A.3 Ventilation openings on the underside of eaves and cornices.

. . .

EXCEPTIONS:

1. The ~~enforcing agency~~Building Official may accept or approve special eave and cornice vents that resist the intrusion of flame and burning embers.

. . .

SECTION 15. Section 710A.3.2 is hereby amended to read as follows:

710A.3.2 When required by the ~~enforcing agency~~Building Official, detached accessory structures within 50 feet of an applicable building shall comply with the requirements of this ~~s~~Section.

SECTION 16. Section 710A.4 is hereby amended to read as follows:

710A.4. Requirements.

When required by the ~~enforcing agency~~Building Official, accessory structures shall be constructed of noncombustible or ignition-resistant materials.

SECTION 17. Section 1029.4 is hereby amended to read as follows:

1029.4 Operational constraints.

. . .

Where security bars (burglar bars) are installed on emergency egress and rescue windows or doors, ~~on or after July 1, 2000,~~ such devices shall comply with California Building Standards Code, Part 12, Chapter 12-3 and other applicable provisions of Part 2.

. . .

SECTION 18. Section 1207.1 is hereby amended to read as follows:

1207.1 Purpose and scope.

The purpose of this ~~s~~Section is to establish uniform minimum noise insulation performance standards to protect persons within hotels, motels, dormitories, long-term care facilities, apartment houses, ~~and~~ dwellings, private schools, and places of worship ~~other than detached single-family dwellings~~ from the effects of excessive noise, including, but not limited to, hearing loss or impairment and interference with speech and sleep. This ~~s~~Section shall apply to all buildings for which applications for building permits were made subsequent to August 22, 1974.

SECTION 19. Section 1207.11.1 is hereby amended to read as follows:

1207.11.1 Application.

Consistent with local land-use standards, ~~residential~~ all structures identified in Section 1207.1 located in noise critical areas, such as proximity to highways, county roads, city streets, railroads, rapid transit lines, airports or industrial areas, shall be designed to prevent the intrusion of exterior noises beyond prescribed levels. Proper design shall include, but shall not be limited to, orientation of the ~~residential~~ structure, setbacks, shielding, and sound insulation of the building itself.

SECTION 20. Section 1207.11.2 is hereby amended to read as follows:

1207.11.2 Allowable interior noise levels.

Interior noise levels attributable to exterior sources shall not exceed 45 db in any habitable rooms, classrooms, and all rooms used in patient care and worship. The noise metric shall be either the day-night average sound level (Ldn) or the community noise equivalent level (CNEL), consistent with the noise element of the local general plan.

. . .

SECTION 21. Section 1207.11.3 is hereby amended to read as follows:

1207.11.3 Airport noise sources.

Residential structures ~~to be~~and all other structures identified in Section 1207.1, located where the annual Ldn or CNEL (as defined in Title 21, Division 2.5, Chapter 6, Article 1, ~~S~~section 5001, California Code of Regulations) exceeds 60 db and 65 db,

respectively, shall require an acoustical analysis showing that the proposed design will achieve prescribed allowable interior level.

EXCEPTION: New single-family detached dwellings and all non-residential noise-sensitive structures located outside the noise impact boundary of 65 db CNEL are exempt from Section 1207.

Alterations or additions to all noise-sensitive structures, within the 65 db and greater CNEL shall comply with Section 1207. If the addition or alteration cost exceeds 75 percent of the replacement cost of the existing structure, then the entire structure must comply with Section 1207.

For public-use airports or heliports, the Ldn or CNEL shall be determined from the ~~airport land-use plan~~Aircraft Noise Impact Area Map prepared by the ~~county wherein the airport is located~~Airport Authority. For military bases, the Ldn shall be determined from the facility Air Installation Compatible Use Zone (AICUZ) plan. For all other airports or heliports, or public-use airports or heliports for which a land-use plan has not been developed, the Ldn or CNEL shall be determined from the noise element of the general plan of the local jurisdiction.

. . .

SECTION 22. Section 1207.11.4 is hereby amended to read as follows:

1207.11.4 Other noise sources.

~~Residential~~All structures ~~to be~~identified in Section 1207 located where the Ldn or CNEL exceeds 60 db shall require an acoustical analysis showing that the proposed design will limit exterior noise to the prescribed allowable interior level. The noise

element of the local general plan shall be used to the greatest extent possible to identify sites with noise levels potentially greater than 60 db.

SECTION 23. Section 1207.12 is hereby amended to read as follows:

1207.12 Compliance.

Evidence of compliance shall consist of submittal of an acoustical analysis report, prepared under the supervision of a person experienced in the field of acoustical engineering, with the application for a building permit for all structures identified in Section 1207 or the use of prescriptive standards. The report shall show topographical relationships of noise sources and dwelling sites, identification of noise sources and their characteristics, predicted noise spectra, and levels at the exterior of the proposed dwelling structure considering present and future land usage, basis for the prediction (measured or obtained from published data), noise attenuation measures to be applied, and an analysis of the noise insulation effectiveness of the proposed construction showing that the prescribed interior noise level requirements are met.

If interior allowable noise levels are met by requiring that windows be unopenable or closed, the design for the structure must also specify a ventilation or air-conditioning system to provide a habitable interior environment. The ventilation system must not compromise the ~~dwelling unit or guest~~interior room noise reduction.

SECTION 24. Section 1403.3 is hereby amended to read as follows:

1403.3 Structural.

Exterior walls, and the associated openings, shall be designed and constructed to resist safely the superimposed loads required by Chapter 16.

In no case shall veneer be considered as part of the wall in computing strength of deflection nor shall it be considered a part of the required thickness of the wall. Deflection of lateral support of veneer, including wood studs, shall be no greater than h/500.

SECTION 25. Section 1405.7 is hereby amended to read as follows:

1405.7 **Masonry or s~~S~~tone veneer.**

~~Stone veneer units not exceeding 10 inches (254 mm) in thickness shall be anchored directly to masonry, concrete or to stud construction by one of the following methods:~~Support of masonry and stone veneer shall be designed by a registered design professional, unless the masonry or stone veneer complies with the following:

~~1. With concrete or masonry backing, anchor ties shall be not less than 0.1055-inch (2.68 mm) corrosion-resistant wire, or approved equal, formed beyond the base of the backing. The legs of the loops shall be not less than 6 inches (152 mm) in length bent at right angles and laid in the mortar joint, and spaced so that the eyes or loops are 12 inches (305 mm) maximum on center (o.c.) in both directions. There shall be provided not less than a 0.1055-inch (2.68 mm) corrosion-resistant wire tie, or approved equal, threaded through the exposed loops for every 2 square feet (0.2 m2) of stone veneer. This tie shall be a loop having legs not less than 15 inches (381 mm) in length bent so that it will lie in the stone veneer mortar joint. The last 2 inches (51 mm) of each wire leg shall have a right-angle bend. One-inch (25 mm) minimum thickness of cement grout shall be placed between the backing and the stone veneer.~~

~~2. With stud backing, a 2-inch by 2-inch (51 by 51 mm) 0.0625-inch (1.59 mm) corrosion-resistant wire mesh with two layers of water-resistive barrier in accordance with Section 1404.2 shall be applied directly to wood studs spaced a maximum of 16 inches (406 mm) o.c. On studs, the mesh shall be attached with 2-inch-long (51 mm) corrosion-resistant steel wire furring nails at 4 inches (102 mm) o.c. providing a minimum 1.125-inch (29 mm) penetration into each stud and with 8d common nails at 8 inches (203 mm) o.c. into top and bottom plates or with equivalent wire ties. There shall be not less than a 0.1055-inch (2.68 mm) corrosion-resistant wire, or approved equal, looped through the mesh for every 2 square feet (0.2 m2) of stone veneer. This tie shall be a loop having legs not less than 15 inches (381 mm) in length, so bent that it will lie in the stone veneer mortar joint. The last 2 inches (51 mm) of each wire leg shall have a right-angle bend. One-inch (25- mm) minimum thickness of cement grout shall be placed between the backing and the stone veneer.~~

1405.7.1 Masonry and stone units [5 inches (127 mm) maximum in thickness].

Masonry and stone veneer not exceeding 5 inches (127 mm) in thickness may be anchored directly to structural masonry, concrete, or studs in one of the following manners:

1. Wall ties conforming to the following requirements. Wall ties shall be corrosion resistant, made of sheet metal, shall have a minimum thickness of .0785 inch (02.00 mm) (No. 14 galvanized sheet gauge) by 1 inch (25.4 mm), and shall be attached to the backing, as the veneer is laid, by minimum #10 hex head galvanized

screws with penetration of at least 2 inches (51 mm) into the framing member, placed not more than 1/4 inch (6.35 mm) above the extended leg of the angle tie. Wall ties shall be spaced so as to support not more than 2 square feet (0.19 m^2) of wall area but shall not be more than 24 inches (610 mm) on center horizontally. For Seismic Design Categories D, E, and F, wall ties shall have a lip or hook on the extended leg that will engage or enclose a horizontal joint reinforcement wire having a diameter of 0.148 inch (3.76 mm) (No. 9 B.W. gauge) or equivalent. The joint reinforcement shall be continuous with butt splices between ties permitted.

When applied over wood stud construction, the studs shall be spaced a maximum of 16 inches (406 mm) on center and approved paper, a minimum 30# fiberglass felt, 4 inch (102 mm) minimum on horizontal laps and 6 inch (152 mm) minimum on end laps, shall first be applied over minimum 15/32 inch (12 mm) plywood sheathing except as otherwise provided in Section 1403.2, and an air space of at least 1-inch (25 mm) shall be maintained between the backing and the veneer. Spot bedding at all ties shall be of cement mortar.

2. Veneer conforming to the following requirements. Veneer applied with 1-inch-minimum (25 mm) grouted backing space which is reinforced by not less than 2-inch by 2-inch (51 mm by 51 mm) 0.065 inch (1.65 mm) thick (No. 16 B.W. gauge) galvanized wire mesh placed over waterproof paper backing and anchored directly to stud construction. Such construction shall be allowed to a height not to exceed 4 feet (1219 mm) above grade.

The stud spacing shall not exceed 16 inches (406 mm) on center. The galvanized wire mesh shall be anchored to wood studs by galvanized steel wire furring nails at 4 inches (102 mm) on center or by barbed galvanized nails at 6 inches (152 mm) on center with a $1^1/_8$-inch-minimum (29 mm) penetration. The galvanized wire mesh may be attached to steel studs by equivalent wire ties. If this method is applied over solid sheathing, the mesh must be furred for embedment in grout. The wire mesh must be attached at the top and bottom with not less than 8d (64 mm) common wire nails. The grout fill shall be placed to fill the space intimately around the mesh and veneer facing.

1405.7.2 Stone units [10 inches (254 mm) maximum in thicknéss].

Stone veneer units not exceeding 10 inches (254 mm) in thickness may be anchored directly to structural masonry or concrete. Anchor ties shall not be less than 0.109 inch (2.77 mm) (No. 12 B.W. gage) galvanized wire, or approved equal, formed as an exposed eye and extending not less than 1/2 inch (3 mm) beyond the face of the backing. The legs of the loops shall not be less than 6 inches (152 mm) in length bent at right angles and laid in the masonry mortar joint and spaced so that the eyes or loops are 12 inches (254 mm) maximum on center in both directions. There shall be provided not less than a 0.109 inch (2.77 mm) (No. 12 B.W. gauge) galvanized wire tie, or approved equal, threaded through the exposed loops for every 2 square feet (0.19 m^2) of stone veneer. This tie shall be a loop having legs not less than 15 inches (381 mm) in length bent so that it will lie in the stone veneer mortar joint. The last 2 inches (51

mm) of each wire leg shall have a right angle bend. One inch (25 mm) of cement grout shall be placed between the backing and the stone veneer.

SECTION 26. Section 1507.3.1 is hereby amended to read as follows:

1507.3.1 Deck requirements.

Concrete and clay tile shall be installed only over solid ~~sheathing or spaced~~ structural sheathing boards.

SECTION 27. Table 1507.3.7 is hereby amended to read as follows:

TABLE 1507.3.7

CLAY AND CONCRETE TILE ATTACHMENT [a, b, c]

GENERAL – CLAY OR CONCRETE ROOF TILE				
Maximum basic wind speed (mph)	**Mean roof height (feet)**	**Roof slope up to <3:12**	**Roof slope 3:12 and over**	
85	0 - 60	*Minimum slope: 2.5:12*	Two fasteners per tile. ~~Only one fastener on slopes of 7:12 and less for tiles with installed weight exceeding 7.5 lbs/sq. ft. having a width no greater than 16 inches.~~	
100	0 - 40	~~One fastener per tile. Flat tile without vertical laps, t~~Two fasteners per tile.		
. . .	. . .	. . .		
INTERLOCKING CLAY OR CONCRETE ROOF TILE WITH PROJECTING ANCHOR LUGS [d, e] (Installations on ~~spaced/solid sheathing with battens or spaced sheathing~~)				
Maximum basic wind speed (mph)	**Mean roof height (feet)**	**Roof slope up to <5:12**	**Roof slope 5:12<12:12**	**Roof slope 12:12 and over**
85	0 - 60	~~Fasteners are not required. Tiles with installed weight less than 9 lbs/sq. ft. require a minimum of o~~Minimum slope is 4:12. ~~o~~One fastener per tile.	One fastener per tile ~~every other row. All perimeter tiles require one fastener~~. Tiles with installed weight less than 9 lbs/sq.ft. require a minimum of one fastener per tile.	One fastener required for every tile. Tiles with installed weight less than 9 lbs./sq. ft. require a minimum of one fastener per tile.
100	0 - 40			
. . .	. . .	. . .		
INTERLOCKING CLAY OR CONCRETE ROOF TILE WITH PROJECTING ANCHOR LUGS (Installations on solid sheathing without battens)				
Maximum basic wind speed (mph)	**Mean roof height (feet)**	**~~All~~Minimum roof slopes 4 units vertical in 12 units horizontal** **Maximum slope 7 units vertical in 12 units horizontal**		
. . .	. . .	. . .		

For SI: 1 inch = 25.4 mm, 1 foot = 304.8 mm, 1 mile per hour = 0.447 m/s, 1 pound per square foot = 4.882 kg/m^2.

[a] Minimum fastener size. Hot dipped galvanized ring shank or other ~~C~~corrosion-resistant nails not less than No. 11 gage with $^5/_{16}$-inch head. Fasteners shall be long enough to penetrate into the sheathing 0.75 inch or through the thickness of the sheathing, whichever is less. Attaching wire for clay and concrete tile shall not be smaller than 0.083 inch and shall be copper, brass or stainless steel.

. . .

SECTION 28. Section 1613.6.7 is hereby amended to read as follows:

1613.6.7 Minimum distance for building separation.

. . .

$$\delta_M = \frac{C_d \delta_{max}}{\cancel{I}}$$

(Equation 16-44)

where:

C_d = Deflection amplification factor in Table 12.2-1 of ASCE 7.

δ_{max} = Maximum displacement defined in Section 12.8.4.3 of ASCE 7.

~~I = Importance factor in accordance with Section 11.5.1 of ASCE 7.~~

. . .

SECTION 29. Section 1613.8 is hereby added to read as follows:

1613.8 Modifications to ASCE 7.

The text of ASCE 7 shall be modified as indicated in Sections 1613.8.1 through 1613.8.4.

1613.8.1 ASCE 7, Table 12.8-2.

Modify ASCE 7, Table 12.8-2, by adding the following:

Structure Type	C_t	**x**
Eccentrically-braced steel frames and buckling-restrained braced frames	0.03 (0.0731)[a]	0.75

1613.8.2 ASCE 7, 12.2.3.1, Exception 3.

Modify ASCE 7, Section 12.2.3.1, Exception 3, to read as follows:

3. Detached one- and two-family dwellings up to two stories in height of light frame construction.

1613.8.3 ASCE 7, Section 12.8.7.

Modify ASCE 7, Section 12.8.7, by amending Equation 12.8-16 to read as follows:

$$\theta = \frac{P_x \Delta I}{V_x h_{sx} C_d} \qquad (12.8\text{-}16)$$

1613.8.4 ASCE 7, Section 12.11.2.2.3.

Modify ASCE 7, Section 12.11.2.2.3, to read as follows:

12.11.2.2.3 Wood diaphragms. In wood diaphragms, the continuous ties shall be in addition to the diaphragm sheathing. Anchorage shall not be accomplished by use of toe nails or nails subject to withdrawal nor shall wood ledgers or framing be used in cross-grain bending or cross-grain tension. The diaphragm

sheathing shall not be considered effective as providing ties or struts required by this Section.

For structures assigned to Seismic Design Category D, E, or F, wood diaphragms supporting concrete or masonry walls shall comply with the following:

1. The spacing of continuous ties shall not exceed 40 feet. Added chords of diaphragms may be used to form subdiaphragms to transmit the anchorage forces to the main continuous crossties.

2. The maximum diaphragm shear used to determine the depth of the subdiaphragm shall not exceed 75 percent of the maximum diaphragm shear.

SECTION 30. Section 1613.9 is hereby added to read as follows:

1613.9 Seismic design provisions for hillside buildings.

1613.9.1 Purpose. The purpose of this Section is to establish minimum regulations for the design and construction of new buildings and additions to existing buildings when constructing such buildings on or into slopes steeper than one unit vertical in three units horizontal (33.3 percent). These regulations establish minimum standards for seismic force resistance to reduce the risk of injury or loss of life in the event of earthquakes.

1613.9.2 Scope. The provisions of this Section shall apply to the design of the lateral-force-resisting system for hillside buildings at and below the base level diaphragm. The design of the lateral-force-resisting system above the base level diaphragm shall be in accordance with the provisions for seismic and wind design as required elsewhere in this Chapter.

EXCEPTIONS:

1. Non-habitable accessory buildings and decks not supporting or supported from the main building are exempt from these regulations.

2. Additions to existing buildings that do not exceed 10 percent of the existing floor area provided that the addition is being supported completely by the existing foundation.

1613.9.3 Definitions. For the purposes of this Section certain terms are defined as follows:

BASE LEVEL DIAPHRAGM is the floor at, or closest to, the top of the highest level of the foundation.

DIAPHRAGM ANCHORS are assemblies that connect a diaphragm to the adjacent foundation at the uphill diaphragm edge.

DOWNHILL DIRECTION is the descending direction of the slope approximately perpendicular to the slope contours.

FOUNDATION is concrete or masonry which supports a building, including footings, stem walls, retaining walls, and grade beams.

FOUNDATION EXTENDING IN THE DOWNHILL DIRECTION is a foundation running downhill and approximately perpendicular to the uphill foundation.

HILLSIDE BUILDING is any building or portion thereof constructed on or into a slope steeper than one unit vertical in three units horizontal (33.3 percent). If only a portion of the building is supported on or into the slope, these regulations apply to the entire building.

PRIMARY ANCHORS are diaphragm anchors designed for and providing a direct connection as described in Sections 1613.9.5 and 1613.9.7.3 between the diaphragm and the uphill foundation.

SECONDARY ANCHORS are diaphragm anchors designed for and providing a redundant diaphragm to foundation connection, as described in Sections 1613.9.6 and 1613.9.7.4.

UPHILL DIAPHRAGM EDGE is the edge of the diaphragm adjacent and closest to the highest ground level at the perimeter of the diaphragm.

UPHILL FOUNDATION is the foundation parallel and closest to the uphill diaphragm edge.

1613.9.4 Analysis and design.

1613.9.4.1 General. Every hillside building within the scope of this Section shall be analyzed, designed, and constructed in accordance with the provisions of this Chapter. When the code-prescribed wind design produces greater effects, the wind design shall govern, but detailing requirements and limitations prescribed in this Section and all referenced Sections shall be followed.

1613.9.4.2 Base level diaphragm-downhill direction. The following provisions shall apply to the seismic analysis and design of the connections for the base level diaphragm in the downhill direction.

1613.9.4.2.1 Base for lateral force design defined. For seismic forces acting in the downhill direction, the base of the building shall be the floor at, or closest to, the top of the highest level of the foundation.

1613.9.4.2.2 Base shear. In developing the base shear for seismic design, the response modification coefficient (R) shall not exceed 5 for bearing wall and building frame systems. The total base shear shall include the forces tributary to the base level diaphragm including forces from the base level diaphragm.

1613.9.5 Base shear resistance-primary anchors.

1613.9.5.1 General. The base shear in the downhill direction shall be resisted through primary anchors from diaphragm struts provided in the base level diaphragm to the foundation.

1613.9.5.2 Location of primary anchors. A primary anchor and diaphragm strut shall be provided in line with each foundation extending in the downhill direction. Primary anchors and diaphragm struts shall also be provided where interior vertical lateral-force-resisting elements occur above and in contact with the base level diaphragm. The spacing of primary anchors and diaphragm struts or collectors shall in no case exceed 30 feet (9,144 mm).

1613.9.5.3 Design of primary anchors and diaphragm struts. Primary anchors and diaphragm struts shall be designed in accordance with the requirements of Section 1613.9.8.

1613.9.5.4 Limitations. The following lateral-force-resisting elements shall not be designed to resist seismic forces below the base level diaphragm in the downhill direction:

1. Wood structural panel wall sheathing;
2. Cement plaster and lath;

3. Gypsum wallboard; and

4. Tension-only braced frames.

Braced frames designed in accordance with the requirements of Section 2205.2.2 may be used to transfer forces from the primary anchors and diaphragm struts to the foundation provided lateral forces do not induce flexural stresses in any member of the frame or in the diaphragm struts. Deflections of frames shall account for the variation in slope of diagonal members when the frame is not rectangular.

1613.9.6 Base shear resistance-secondary anchors.

1613.9.6.1 General. In addition to the primary anchors required by Section 1613.9.5, the base shear in the downhill direction shall be resisted through secondary anchors in the uphill foundation connected to diaphragm struts in the base level diaphragm.

Exception: Secondary anchors are not required where foundations extending in the downhill direction spaced at not more than 30 feet (9,144 mm) on center extend up to and are directly connected to the base level diaphragm for at least 70 percent of the diaphragm depth.

1613.9.6.2 Secondary anchor capacity and spacing. Secondary anchors at the base level diaphragm shall be designed for a minimum force equal to the base shear, including forces tributary to the base level diaphragm, but not less than 600 pounds per lineal foot (8.76 kN/m). The secondary anchors shall be uniformly

distributed along the uphill diaphragm edge and shall be spaced a maximum of four feet (1,219 mm) on center.

1613.9.6.3 Design. Secondary anchors and diaphragm struts shall be designed in accordance with Section 1613.9.8.

1613.9.7 Diaphragms below the base level-downhill direction.

The following provisions shall apply to the lateral analysis and design of the connections for all diaphragms below the base level diaphragm in the downhill direction.

1613.9.7.1 Diaphragm defined. Every floor level below the base level diaphragm shall be designed as a diaphragm.

1613.9.7.2 Design force. Each diaphragm below the base level diaphragm shall be designed for all tributary loads at that level using a minimum seismic force factor not less than the base shear coefficient.

1613.9.7.3 Design force-resistance-primary anchors. The design force described in Section 1613.9.7.2 shall be resisted through primary anchors from diaphragm struts provided in each diaphragm to the foundation. Primary anchors shall be provided and designed in accordance with the requirements and limitations of Section 1613.9.5.

1613.9.7.4 Design force-resistance-secondary anchors.

1613.9.7.4.1 General. In addition to the primary anchors required in Section 1613.9.7.3, the design force in the downhill direction shall be resisted through secondary anchors in the uphill foundation connected to diaphragm struts in each diaphragm below the base level.

Exception: Secondary anchors are not required where foundations extending in the downhill direction, spaced at not more than 30 feet (9,144 mm) on center, extend up to and are directly connected to each diaphragm below the base level for at least 70 percent of the diaphragm depth.

1613.9.7.4.2 Secondary anchor capacity. Secondary anchors at each diaphragm below the base level diaphragm shall be designed for a minimum force equal to the design force but not less than 300 pounds per lineal foot (4.38 kN/m). The secondary anchors shall be uniformly distributed along the uphill diaphragm edge and shall be spaced a maximum of four feet (1,219 mm) on center.

1613.9.7.4.3 Design. Secondary anchors and diaphragm struts shall be designed in accordance with Section 1613.9.8.

1613.9.8 Primary and secondary anchorage and diaphragm strut design. Primary and secondary anchors and diaphragm struts shall be designed in accordance with the following provisions:

1. Fasteners. All bolted fasteners used to develop connections to wood members shall be provided with square plate washers at all bolt heads and nuts. Washers shall be minimum 0.229 inch by 3 inches by 3 inches (5.82 mm by 76 mm by 76 mm) in size. Nuts shall be tightened to finger tight plus one half (1/2) wrench turn prior to covering the framing.

2. Fastening. The diaphragm to foundation anchorage shall not be accomplished by the use of toenailing, nails subject to withdrawal, or wood in cross-grain bending or cross-grain tension.

3. Size of Wood Members. Wood diaphragm struts, collectors, and other wood members connected to primary anchors shall not be less than three-inch (76 mm) nominal width. The effects of eccentricity on wood members shall be evaluated as required per Item 9.

4. Design. Primary and secondary anchorage, including diaphragm struts, splices, and collectors shall be designed for 125 percent of the tributary force.

5. Allowable Stress Increase. The one-third allowable stress increase permitted under Section 1605.3.2 shall not be taken when the working (allowable) stress design method is used.

6. Steel Element of Structural Wall Anchorage System. The strength design forces for steel elements of the structural wall anchorage system, with the exception of anchor bolts and reinforcing steel, shall be increased by 1.4 times the forces otherwise required.

7. Primary Anchors. The load path for primary anchors and diaphragm struts shall be fully developed into the diaphragm and into the foundation. The foundation must be shown to be adequate to resist the concentrated loads from the primary anchors.

8. Secondary Anchors. The load path for secondary anchors and diaphragm struts shall be fully developed in the diaphragm but need not be developed beyond the connection to the foundation.

9. Symmetry. All lateral force foundation anchorage and diaphragm strut connections shall be symmetrical. Eccentric connections may be permitted when

demonstrated by calculation or tests that all components of force have been provided for in the structural analysis or tests.

10. Wood Ledgers. Wood ledgers shall not be used to resist cross-grain bending or cross-grain tension.

1613.9.9 Lateral-force-resisting elements normal to the downhill direction.

1613.9.9.1 General. In the direction normal to the downhill direction, lateral-force-resisting elements shall be designed in accordance with the requirements of this Section.

1613.9.9.2 Base shear. In developing the base shear for seismic design, the response modification coefficient (R) shall not exceed 5 for bearing wall and building frame systems.

1613.9.9.3 Vertical distribution of seismic forces. For seismic forces acting normal to the downhill direction the distribution of seismic forces over the height of the building using Section 12.8.3 of ASCE 7 shall be determined using the height measured from the top of the lowest level of the building foundation.

1613.9.9.4 Drift limitations. The story drift below the base level diaphragm shall not exceed 0.007 times the story height at strength design force level. The total drift from the base level diaphragm to the top of the foundation shall not exceed 3/4 inch (19 mm). Where the story height or the height from the base level diaphragm to the top of the foundation varies because of a stepped footing or story offset, the height shall be measured from the average height of the top of the

foundation. The story drift shall not be reduced by the effect of horizontal diaphragm stiffness.

1613.9.9.5 Distribution of lateral forces.

1613.9.9.5.1 General. The design lateral force shall be distributed to lateral-force-resisting elements of varying heights in accordance with the stiffness of each individual element.

1613.9.9.5.2 Wood structural panel sheathed walls. The stiffness of a stepped wood structural panel shear wall may be determined by dividing the wall into adjacent rectangular elements, subject to the same top of wall deflection. Deflections of shear walls may be estimated by AF&PA SDPWS Section 4.3.2. Sheathing and fastening requirements for the stiffest section shall be used for the entire wall. Each section of wall shall be anchored for shear and uplift at each step. The minimum horizontal length of a step shall be eight feet (2438 mm) and the maximum vertical height of a step shall be two feet, eight inches (813 mm).

1613.9.9.5.3 Reinforced concrete or masonry shear walls.

Reinforced concrete or masonry shear walls shall have forces distributed in proportion to the rigidity of each section of the wall.

1613.9.9.6 Limitations. The following lateral force-resisting-elements shall not be designed to resist lateral forces below the base level diaphragm in the direction normal to the downhill direction:

1. Cement plaster and lath;
2. Gypsum wallboard; and

3. Tension-only braced frames.

Braced frames designed in accordance with the requirements of Section 2205.2.2 of this Code may be designed as lateral-force-resisting elements in the direction normal to the downhill direction, provided lateral forces do not induce flexural stresses in any member of the frame. Deflections of frames shall account for the variation in slope of diagonal members when the frame is not rectangular.

1613.9.10 Specific design provisions.

1613.9.10.1 Footings and grade beams. All footings and grade beams shall comply with the following:

1. Grade beams shall extend at least 12 inches (305 mm) below the lowest adjacent grade and provide a minimum 24-inch (610 mm) distance horizontally from the bottom outside face of the grade beam to the face of the descending slope.

2. Continuous footings shall be reinforced with at least two No. 4 reinforcing bars at the top and two No. 4 reinforcing bars at the bottom.

3. All main footing and grade beam reinforcement steel shall be bent into the intersecting footing and fully developed around each corner and intersection.

4. All concrete stem walls shall extend from the foundation and be reinforced as required for concrete or masonry walls.

1613.9.10.2 Protection against decay and termites. All wood to earth separation shall comply with the following:

1. Where a footing or grade beam extends across a descending slope, the stem wall, grade beam, or footing shall extend up to a minimum 18 inches (457 mm) above the highest adjacent grade.

Exception: At paved garage and doorway entrances to the building, the stem wall need only extend to the finished concrete slab, provided the wood framing is protected with a moisture proof barrier.

2. Wood ledgers supporting a vertical load of more than 100 pounds per lineal foot (1.46 kN/m) and located within 48 inches (1219 mm) of adjacent grade are prohibited. Galvanized steel ledgers and anchor bolts, with or without wood nailers, or treated or decay resistant sill plates supported on a concrete or masonry seat, may be used.

1613.9.10.3 Sill plates. All sill plates and anchorage shall comply with the following:

1. All wood framed walls, including nonbearing walls, when resting on a footing, foundation, or grade beam stem wall, shall be supported on wood sill plates bearing on a level surface.

2. Power-driven fasteners shall not be used to anchor sill plates except at interior nonbearing walls not designed as shear walls.

1613.9.10.4 Column base plate anchorage. The base of isolated wood posts (not framed into a stud wall) supporting a vertical load of 4000 pounds (17.8 kN) or more and the base plate for a steel column shall comply with the following:

1. When the post or column is supported on a pedestal extending above the top of a footing or grade beam, the pedestal shall be designed and reinforced as required for concrete or masonry columns. The pedestal shall be reinforced with a minimum of four No. 4 bars extending to the bottom of the footing or grade beam. The top of exterior pedestals shall be sloped for positive drainage.

2. The base plate anchor bolts or the embedded portion of the post base, and the vertical reinforcing bars for the pedestal, shall be confined with two No. 4 or three No. 3 ties within the top five inches (127 mm) of the concrete or masonry pedestal. The base plate anchor bolts shall be embedded a minimum of 20 bolt diameters into the concrete or masonry pedestal. The base plate anchor bolts and post bases shall be galvanized and each anchor bolt shall have at least two galvanized nuts above the base plate.

1613.9.10.5 Steel beam to column supports. All steel beam to column supports shall be positively braced in each direction. Steel beams shall have stiffener plates installed on each side of the beam web at the column. The stiffener plates shall be welded to each beam flange and the beam web. Each brace connection or structural member shall consist of at least two 5/8 inch (15.9 mm) diameter machine bolts.

SECTION 31. Section 1704.1 is hereby amended to read as follows:

. . .

EXCEPTIONS:

. . .

~~3. Unless otherwise required by the building official, special inspections are not required for Group U occupancies that are accessory to a residential occupancy including, but not limited to, those listed in Section 312.1.~~

~~4~~3. [HCD 1] The provisions of Health and Safety Code Division 13, Part 6 and the California Code of Regulations, Title 25, Division 1, Chapter 3, commencing with ~~S~~section 3000, shall apply to the construction and inspection of factory-built housing as defined in Health and Safety Code ~~S~~section 19971.

SECTION 32. Section 1704.1.1 is hereby amended to read as follows:

1704.1.1 Statement of special inspections.

The applicant shall submit a statement of special inspections prepared by the registered design professional in responsible charge in accordance with Section ~~107.1 Chapter 1, Division II~~106.4.2, as a condition for permit issuance. This statement shall be in accordance with Section 1705.

. . .

SECTION 33. Section 1704.4 is hereby amended to read as follows:

1704.4 Concrete Construction.

. . .

EXCEPTIONS: Special inspection shall not be required for:

1. Isolated spread concrete footings of buildings three stories or less above grade plane that are fully supported on earth or rock where the structural design of the footing is based on a specified compressive strength, f'c, not greater than 2,500 pounds

per square inch (psi) (17.2 Mpa) regardless of the compressive strength specified in the construction documents or used in the footing construction.

. . .

~~4. Concrete foundation walls constructed in accordance with Table 1807.1.6.2.~~

~~5~~4. Concrete patios, ~~driveways~~ and sidewalks, on grade.

SECTION 34. Section 1704.8 is hereby amended to read as follows:

1704.8 Driven deep foundations and connection grade beams.

Special inspections shall be performed during installation and testing of driven deep foundation elements as required by Table 1704.8. Special inspections shall be performed for connection grade beams in accordance with Section 1704.4 for structures assigned to Seismic Design Category D, E, or F. The approved geotechnical report, and the construction documents prepared by the registered design professionals, shall be used to determine compliance.

SECTION 35. Section 1704.9 is hereby amended to read as follows:

1704.9 Cast-in-place deep foundations and connection grade beams.

Special inspections shall be performed during installation and testing of cast-in-place deep foundation elements as required by Table 1704.9. Special inspections shall be performed for connection grade beams in accordance with Section 1704.4 for structures assigned to Seismic Design Category D, E, or F. The approved geotechnical

report, and the construction documents prepared by the registered design professionals, shall be used to determine compliance.

SECTION 36. Section 1705.3 is hereby amended to read as follows:

1705.3 Seismic resistance.

. . .

Exception: Seismic requirements are permitted to be excluded from the statement of special inspections for structures designed and constructed in accordance with the following:

. . .

3. Detached one- or two-family dwellings not exceeding two stories above grade plane, provided the structure is not assigned to Seismic Design Category D, E, or F and does not have any of the following plan or vertical irregularities in accordance with Section 12.3.2 of ASCE 7:

. . .

SECTION 37. Section 1710.1 is hereby amended to read as follows:

1710.1 General.

Where required by the provisions of Section 1710.2 or 1710.3, the owner shall employ a ~~registered design professional~~structural observer to perform structural observations as defined in Section 1702. The structural observer shall be one of the following individuals:

1. The registered design professional responsible for the structural design, or

2. A registered design professional designated by the registered design professional responsible for the structural design.

. . .

~~At the conclusion of the work included in the permit, the structural observer shall submit to the building official a written statement that the site visits have been made and identify any reported deficiencies that, to the best of the structural observer's knowledge, have not been resolved.~~

The owner or owner's representative shall coordinate and call a preconstruction meeting between the structural observer, contractors, affected subcontractors, and special inspectors. The structural observer shall preside over the meeting. The purpose of the meeting shall be to identify the major structural elements and connections that affect the vertical and lateral load resisting systems of the structure and to review scheduling of the required observations. A record of the meeting shall be included in the report submitted to the Building Official.

Observed deficiencies shall be reported in writing to the owner or owner's representative, special inspector, contractor, and the Building Official. Upon the form prescribed by the Building Official, the structural observer shall submit to the Building Official a written statement at each significant construction stage stating that the site visits have been made and identifying any reported deficiencies which, to the best of the structural observer's knowledge, have not been resolved. A final report by the structural observer which states that all observed deficiencies have been resolved is required before acceptance of the work by the Building Official.

SECTION 38. Section 1710.2 is hereby amended to read as follows:

1710.2 Structural observations for seismic resistance.

. . .

3. The structure~~ is assigned to Seismic Design Category E,~~ is classified as Occupancy Category I or II in accordance with Table 1604.5, and ~~is greater than two stories one stories above grade plane~~a lateral design is required for the structure or portion thereof.

Exception: One-story wood framed Group R-3 and Group U Occupancies less than 2000 square feet in area, provided the adjacent grade is not steeper than 1 unit vertical in 10 units horizontal (10 percent sloped), assigned to Seismic Design Category D.

. . .

SECTION 39. Section 1807.1.4 is hereby amended to read as follows:

1807.1.4 Permanent wood foundations systems.

Permanent wood foundation systems shall be designed and installed in accordance with AF&PA PWF. Lumber and plywood shall be treated in accordance with AWPA U1 (Commodity Specification A, Use Category 4B and Section 5.2) and shall be identified in accordance with Section 2303.1.8.1. Permanent wood foundation systems shall not be used for structures assigned to Seismic Design Category D, E, or F.

SECTION 40. Section 1807.1.6 is hereby amended to read as follows:

1807.1.6 Prescriptive design of concrete and masonry foundation walls.

Concrete and masonry foundation walls that are laterally supported at the top and bottom shall be permitted to be designed and constructed in accordance with this ~~s~~Section. Prescriptive design of foundation walls shall not be used for structures assigned to Seismic Design Category D, E, or F.

SECTION 41. Section 1809.3 is hereby amended to read as follows:

1809.3 Stepped footings.

. . .

For structures assigned to Seismic Design Category D, E, or F, the stepping requirement shall also apply to the top surface of grade beams supporting walls. Footings shall be reinforced with four 1/2-inch diameter (12.7 mm) deformed reinforcing bars. Two bars shall be placed at the top and bottom of the footings as shown in Figure 1809.3.

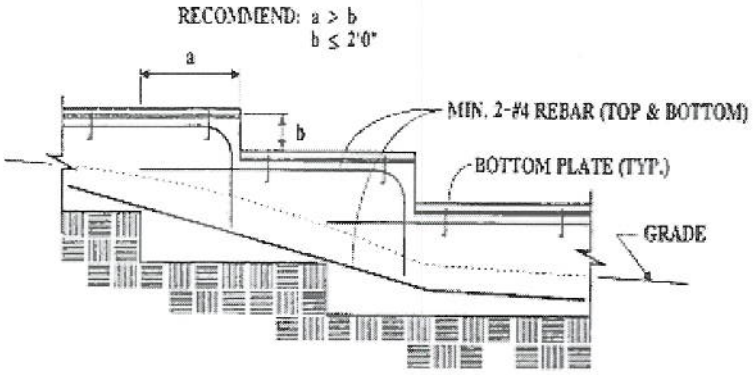

STEPPED FOUNDATIONS

FIGURE 1809.3

STEPPED FOOTING

SECTION 42. Section 1809.7 is hereby amended to read as follows:

1809.7 Prescriptive footings for light-frame construction.

Where a specific design is not provided, concrete or masonry-unit footings supporting walls of light-frame construction shall be permitted to be designed in accordance with Table 1809.7. Prescriptive footings in Table 1809.7 shall not exceed one story above grade plane for structures assigned to Seismic Design Category D, E, or F.

SECTION 43. Table 1809.7 is hereby amended to read as follows:

TABLE 1809.7

PRESCRIPTIVE FOOTINGS SUPPORTING WALLS OF LIGHT-FRAME CONSTRUCTION [a, b, c, d, e]

. . .

c. ~~Interior stud-bearing walls shall be permitted to be supported by isolated footings. The footing width and length shall be twice the width shown in this table, and footings shall be spaced not more than 6 feet on center.~~[Reserved].

. . .

~~g. Plain concrete footings for Group R-3 occupancies shall be permitted to be 6 inches thick.~~

SECTION 44. Section 1809.12 is hereby amended to read as follows:

1809.12 Timber footings.

Timber footings shall be permitted for buildings of Type V construction and as otherwise approved by the ~~b~~Building ~~o~~Official. Such footings shall be treated in accordance with AWPA U1 (Commodity Specification A, Use Category 4B). Treated timbers are not required where placed entirely below permanent water level, or where used as capping for wood piles that project above the water level over submerged or marsh lands. The compressive stresses perpendicular to grain in untreated timber footing supported upon treated piles shall not exceed 70 percent of the allowable stresses for the species and grade of timber as specified in the AF&PA NDS. Timber footings shall not be used in structures assigned to Seismic Design Category D, E, or F.

SECTION 45. Section 1908.1 is hereby amended to read as follows:

1908.1 General.

The text of ACI 318 shall be modified as indicated in Sections 1908.1.1 through ~~1908.1.10~~1908.1.14.

SECTION 46. Section 1908.1.2 is hereby amended to read as follows:

1908.1.2 ACI 318, Section 21.1.1.

Modify ACI 318, Sections 21.1.1.3, and 21.1.1.7 as follows:

. . .

All special moment frames and special structural walls shall also satisfy 21.1.3 through 21.1.7. Concrete tilt-up wall panels classified as intermediate precast structural

wall systems shall satisfy 21.9 in addition to 21.4.2 and 21.4.3 for structures assigned to Seismic Design Category D, E, or F.

SECTION 47. Section 1908.1.3 is hereby amended to read as follows:

1908.1.3 ACI 318, Section 21.4.

Modify ACI 318, Section 21.4, by renumbering Section 21.4.3 to become 21.4.4 and adding new Sections 21.4.3, 21.4.5, 21.4.6, and 21.4.7 to read as follows:

. . .

21.4.5 – [BSC] Wall piers in Seismic Design Category D, E, or F shall comply with Section 1908.1.4 of this ~~c~~Code. The requirement shall be applicable to all buildings.

. . .

SECTION 48. Section 1908.1.8 is hereby amended to read as follows:

1908.1.8 ACI 318, Section 22.10.

Delete ACI 318, Section 22.10, and replace with the following:

. . .

22.10.1 – Structures assigned to Seismic Design Category C, D, E, or F shall not have elements of structural plain concrete, except as follows:

(a) ~~Structural plain concrete basement, foundation or other walls below the base are permitted in detached one- and two-family dwellings three stories or less in height constructed with stud-bearing walls. In dwellings assigned to Seismic Design Category D or E, the height of the wall shall not exceed 8 feet (2438 mm), the thickness shall not be less than 7½ inches (190 mm), and the wall shall retain no more than 4 feet~~

~~(1219 mm) of unbalanced fill. Walls shall have reinforcement in accordance with 22.6.6.5.~~Concrete used for fill with a minimum cement content of two (2) sacks of Portland cement per cubic yard.

(b) Isolated footings of plain concrete supporting pedestals or columns are permitted, provided the projection of the footing beyond the face of the supported member does not exceed the footing thickness.

~~Exception: In detached one- and two-family dwellings three stories or less in height, the projection of the footing beyond the face of the supported member is permitted to exceed the footing thickness.~~

(c) Plain concrete footings supporting walls are permitted, provided the footings have at least two continuous longitudinal reinforcing bars. Bars shall not be smaller than No. 4 and shall have a total area of not less than 0.002 times the gross cross-sectional area of the footing. ~~For footings that exceed 8 inches (203 mm) in thickness, a~~A minimum of one bar shall be provided at the top and bottom of the footing. Continuity of reinforcement shall be provided at corners and intersections.

~~Exceptions:~~

~~1.~~ In detached one- and two-family dwellings three stories or less in height and constructed with stud-bearing walls, plain concrete footings~~ without longitudinal reinforcement supporting walls are permitted~~with at least two continuous longitudinal reinforcing bars not smaller than No. 4 are permitted to have a total area of less than 0.002 times the gross cross-sectional area of the footing.

~~2. For foundation systems consisting of a plain concrete footing and a plain concrete stemwall, a minimum of one bar shall be provided at the top of the stemwall and at the bottom of the footing.~~

~~3. Where a slab on ground is cast monolithically with the footing, one No. 5 bar is permitted to be located at either the top of the slab or bottom of the footing.~~

SECTION 49. Section 1908.1.11 is hereby added to read as follows:

1908.1.11 ACI 318, Section 21.6.4.1. Modify ACI 318, Section 21.6.4.1, to read as follows:

Where the calculated point of contraflexure is not within the middle half of the member clear height, provide transverse reinforcement as specified in ACI 318, Sections 21.6.4.1, Items (a) through (c), over the full height of the member.

SECTION 50. Section 1908.1.12 is hereby added to read as follows:

1908.1.12 ACI 318, Section 21.6.4. Modify ACI 318, Section 21.6.4, by adding Section 21.6.4.8 to read as follows:

21.6.4.8 – At any section where the design strength, φP_n, of the column is less than the sum of the shears V_e computed in accordance with ACI 318 Sections 21.5.4.1 and 21.6.5.1 for all the beams framing into the column above the level under consideration, transverse reinforcement as specified in ACI 318 Sections 21.6.4.1 through 21.6.4.3 shall be provided. For beams framing into opposite sides of the column, the moment components may be assumed to be of opposite sign. For the determination of the design strength, φP_n, of the column, these moments may be assumed to result from the deformation of the frame in any one principal axis.

SECTION 51. Section 1908.1.13 is hereby added to read as follows:

1908.1.13 ACI 318, Section 21.9.4. Modify ACI 318, Section 21.9.4, by adding Section 21.9.4.6 to read as follows:

21.9.4.6 – Walls and portions of walls with $P_u > 0.35P_o$ shall not be considered to contribute to the calculated strength of the structure for resisting earthquake-induced forces. Such walls shall conform to the requirements of ACI 318 Section 21.13.

SECTION 52. Section 1908.1.14 is hereby added to read as follows:

1908.1.14 ACI 318, Section 21.11.6. Modify ACI 318, Section 21.11.6, by adding the following:

Collector and boundary elements in topping slabs placed over precast floor and roof elements shall not be less than 3 inches (76 mm) or 6 d_b thick, where d_b is the diameter of the largest reinforcement in the topping slab.

SECTION 53. Section 1909.4 is hereby amended to read as follows:

1909.4 Design.

. . .

Exception: For Group R-3 occupancies and buildings or other occupancies less than two stories above grade plane of light-frame construction, the required edge thickness of ACI 318 is permitted to be reduced to 6 inches (152 mm), provided that the footing does not extend more than 4 inches (102 mm) on either side of the supported wall. This exception shall not apply to structural elements designed to resist seismic lateral forces for structures assigned to Seismic Design Category D, E, or F.

SECTION 54. Section 2204.1.1 is hereby added to read as follows:

2204.1.1 Consumables for welding.

2204.1.1.1 Seismic force resisting system (SFRS) welds. All welds used in members and connections in the SFRS shall be made with filler metals meeting the requirements specified in AWS D1.8, Clause 6.3. AWS D1.8, Clauses 6.3.5, 6.3.6, 6.3.7, and 6.3.8 shall apply only to demand critical welds.

2204.1.1.2 Demand critical welds. Where welds are designated as demand critical, they shall be made with filler metals meeting the requirements specified in AWS D1.8, Clause 6.3.

SECTION 55. Section 2304.9.1 is hereby amended to read as follows:

2304.9.1 Fastener requirements.

Connections for wood members shall be designed in accordance with the appropriate methodology in Section 2301.2. The number and size of fasteners connecting wood members shall not be less than that set forth in Table 2304.9.1. Staple fasteners in Table 2304.9.1 shall not be used to resist or transfer seismic forces in structures assigned to Seismic Design Category D, E, or F.

Exception: Staples may be used to resist or transfer seismic forces when the allowable shear values are substantiated by cyclic testing and approved by the Building Official.

SECTION 56. Table 2304.9.1 is hereby amended to read as follows:

TABLE 2304.9.1

FASTENING SCHEDULE

. . .

q. Staples shall not be used to resist or transfer seismic forces in structures assigned to Seismic Design Category D, E, or F.

SECTION 57. Section 2304.11.7 is hereby amended to read as follows:

2304.11.7 Wood used in retaining walls and cribs.

Wood installed in retaining or crib walls shall be preservative treated in accordance with AWPA U1 (Commodity Specifications A or F) for soil and fresh water use. Wood shall not be used in retaining or crib walls for structures assigned to Seismic Design Category D, E, or F.

SECTION 58. Section 2305.4 is hereby added to read as follows:

2305.4 Quality of nails.

In Seismic Design Category D, E, or F, mechanically driven nails used in wood structural panel shear walls shall meet the same dimensions as that required for hand-driven nails, including diameter, minimum length, and minimum head diameter. Clipped head or box nails are not permitted in new construction. The allowable design value for clipped head nails in existing construction may be taken at no more than the nail-head-area ratio of that of the same size hand-driven nails.

SECTION 59. Section 2305.5 is hereby added to read as follows:

2305.5 Hold-down connectors.

In Seismic Design Category D, E, or F, hold-down connectors shall be designed to resist shear wall overturning moments using approved cyclic load values or 75 percent of the allowable seismic load values that do not consider cyclic loading of the product. Connector bolts into wood framing shall require steel plate washers on the post on the opposite side of the anchorage device. Plate size shall be a minimum of 0.229 inch by 3 inches by 3 inches (5.82 mm by 76 mm by 76 mm) in size. Hold-down connectors shall be tightened to finger tight plus one-half (1/2) wrench turn just prior to covering the wall framing.

SECTION 60. Section 2306.2.1 is hereby amended to read as follows:

2306.2.1 Wood structural panel diaphragms.

Wood structural panel diaphragms shall be designed and constructed in accordance with AF&PA SDPWS. Wood structural panel diaphragms are permitted to resist horizontal forces using the allowable shear capacities set forth in Table 2306.2.1(1) or 2306.2.1(2). For structures assigned to Seismic Design Category D, E, or F, the allowable shear capacities shall be set forth in Table 2306.2.1(3) or 2306.2.1(4). The allowable shear capacities in Table 2306.2.1(1) or 2306.2.1(2) are permitted to be increased 40 percent for wind design.

Wood structural panel diaphragms fastened with staples shall not be used to resist seismic forces in structures assigned to Seismic Design Category D, E, or F.

Exception: Staples may be used for wood structural panel diaphragms when the allowable shear values are substantiated by cyclic testing and approved by the Building Official.

Wood structural panel diaphragms used to resist seismic forces in structures assigned to Seismic Design Category D, E, or F shall be applied directly to the framing members.

Exception: A wood structural panel diaphragm is permitted to be fastened over solid lumber planking or laminated decking, provided the panel joints and lumber planking or laminated decking joints do not coincide.

SECTION 61. Table 2306.2.1(3) is hereby added to read as follows:

TABLE 2306.2.1(3)

ALLOWABLE SHEAR (POUNDS PER FOOT) FOR WOOD STRUCTURAL PANEL DIAPHRAGMS WITH FRAMING OF DOUGLAS FIR-LARCH OR SOUTHERN PINE[a] FOR SEISMIC LOADING[f] FOR STRUCTURES ASSIGNED TO SEISMIC DESIGN CATEGORY D, E, OR F

PANEL GRADE	COMMON NAIL SIZE	MINIMUM FASTENER PENETRATION IN FRAMING (inches)	MINIMUM NOMINAL PANEL THICKNESS (inch)	MINIMUM NOMINAL WIDTH OF FRAMING MEMBERS AT ADJOINING PANEL EDGES AND BOUNDARIES[e] (inches)	BLOCKED DIAPHRAGMS				UNBLOCKED DIAPHRAGMS	
					Fastener spacing (inches) at diaphragm boundaries (all cases) at continuous panel edges parallel to load (Cases 3,4), and at all panel edges (Cases 5, 6)[b]				Fastener spaced 6" max. at supported edges[b]	
					6	4	2 ½ [c]	2[c]	Case 1 (No unblocked edges or continuous joints parallel to load)	All other configurations (Cases 2, 3, 4, 5 and 6)
					Fastener spacing (inches) at other panel edges (Cases 1,2,3 and 4)[b]					
					6	6	4	3		
Structural I Grades	8d (2 ½" x 0.131")	1 3/8	3/8	2	270	360	530	600	240	180
				3	300	400	600	675	265	200
	10d[d] (3" x 0.148")	1 1/2	15/32	2	320	425	640	730	285	215
				3	360	480	720	820	320	240
Sheathing, single floor and other grades covered in DOC PS1 and PS2	6d[e] (2" x 0.113")	1 1/4	3/8	2	185	250	375	420	165	125
				3	210	280	420	475	185	140
	8d (2 ½" x 0.131")	1 3/8		2	240	320	480	545	215	160
				3	270	360	540	610	240	180
	8d (2 ½" x 0.131")	1 3/8	7/16	2	255	340	505	575	230	170
				3	285	380	570	645	255	190
	8d (2 ½" x 0.131")	1 3/8	15/32	2	270	360	530	600	240	180
				3	300	400	600	675	265	200
	10d[d] (3" x 0.148")	1 1/2		2	290	385	575	655	255	190
				3	324	430	650	735	290	215
	10d[d] (3" x 0.148")	1 1/2	19/32	2	320	425	640	730	285	215
				3	360	480	720	820	320	240

TABLE 2306.2.1(3)–continued

ALLOWABLE SHEAR (POUNDS PER FOOT) FOR WOOD STRUCTURAL PANEL DIAPHRAGMS WITH FRAMING OF DOUGLAS FIR-LARCH, OR SOUTHERN PINE[a] FOR SEISMIC LOADING[f] FOR STRUCTURES ASSIGNED TO SEISMIC DESIGN CATERGORY D, E, OR F

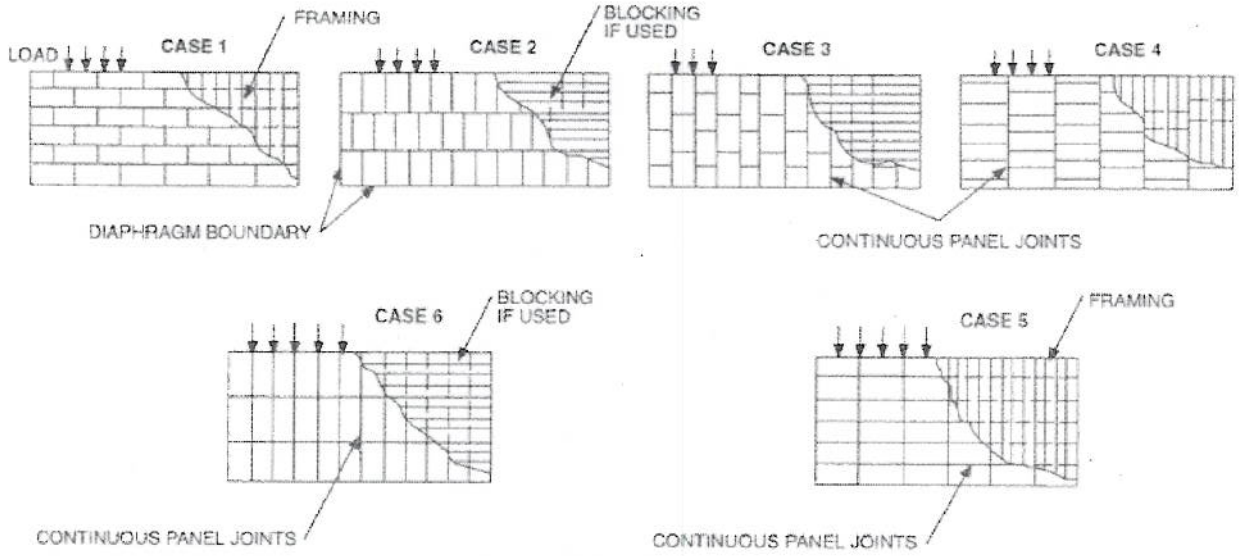

For SI: 1 inch = 25.4 mm, 1 pound per foot = 14.5939 N/m.

a. For framing of other species: (1) Find specific gravity for species of lumber in AF&PA NDS; (2) For nails find shear value from table above for nail size for actual grade and multiply value by the following adjustment factor: Specific Gravity Adjustment Factor = [1-(0.5-SG)], where SG = Specific Gravity of the framing lumber. This adjustment factor shall not be greater than 1.

b. Space fasteners maximum 12 inches o.c. along intermediate framing members (6 inches o.c. where supports are spaced 48 inches o.c.).

c. Framing at adjoining panel edges shall be 3 inches nominal or thicker, and nails at all panel edges shall be staggered where panel edge nailing is specified at 2 ½ inches o.c. or less.

d. Framing at adjoining panel edges shall be 3 inches nominal or thicker, and nails at all panel edges shall be staggered where both of the following conditions are met: (1) 10d nails having penetration into framing of more than 1 ½ inches and (2) panel edge nailing is specified at 3 inches o.c. or less.

e. The minimum nominal width of framing members not located at boundaries or adjoining panel edges shall be 2 inches.

f. For shear loads of normal or permanent load duration as defined by the AF&PA NDS, the values in the table above shall be multiplied by 0.63 or 0.56, respectively.

SECTION 62. Table 2306.2.1(4) is hereby added to read as follows:

TABLE 2306.2.1(4)

ALLOWABLE SHEAR (POUNDS PER FOOT) FOR WOOD STRUCTURAL PANEL BLOCKED DIAPHRAGMS UTILIZING MULTIPLE ROWS OF FASTENERS (HIGH LOAD DIAPHRAGMS) WITH FRAMING OF DOUGLAS FIR-LARCH OR SOUTHERN PINE[a] FOR SEISMIC LOADING[b,f,g]

FOR STRUCTURES ASSIGNED TO SEISMIC DESIGN CATERGORY D, E, OR F

PANEL GRADE[c]	COMMON NAIL SIZE	MINIMUM FASTENER PENETRATION IN FRAMING (inches)	MINIMUM NOMINAL PANEL THICKNESS (inch)	MINIMUM NOMINAL WIDTH OF FRAMING MEMBERS AT ADJOINING PANEL EDGES AND BOUNDARIES[e] (inches)	LINES OF FASTENERS	BLOCKED DIAPHRAGMS			
						Cases 1 and 2[d]			
						Fastener Spacing Per Line at Boundaries (inches)			
						4		2 1/2	
						Fastener Spacing Per Line at Other Panel Edges (inches)			
						6	4	4	3
Structural I grades	10d common nails	1 1/2	15/32	3	2	605	815	875	1,150
				4	2	700	915	1,005	1,290
				4	3	875	1,220	1,285	1,395
			19/32	3	2	670	880	965	1,255
				4	2	780	990	1,110	1,440
				4	3	965	1,320	1,405	1,790
			23/32	3	2	730	955	1,050	1,365
				4	2	855	1,070	1,210	1,565
				4	3	1,050	1,430	1,525	1,800
Sheathing, single floor and other grades covered in DOC PS1 and PS2	10d common nails	1 1/2	15/32	3	2	525	725	765	1,010
				4	2	605	815	875	1,105
				4	3	765	1,085	1,130	1,195
			19/32	3	2	650	860	935	1,225
				4	2	755	965	1,080	1,370
				4	3	935	1,290	1,365	1,485
			23/32	3	2	710	935	1,020	1,335
				4	2	825	1,050	1,175	1,445
				4	3	1,020	1,400	1,480	1,565

For SI: 1 inch = 25.4 mm, 1 pound per foot = 14.5939 N/m.

a. For framing of other species: (1) Find specific gravity for species of lumber in AF&PA NDS; (2) For nails find shear value from table above for nail size for actual grade and multiply value by the following adjustment factor: Specific Gravity Adjustment Factor = [1-(0.5-SG)], where SG = Specific Gravity of the framing lumber. This adjustment factor shall not be greater than 1.

b. Fastening along intermediate framing members: Space fasteners a maximum of 12 inches on center, except 6 inches on center for spans greater than 32 inches.

c. Panels conforming to PS1 or PS 2.

d. This table gives shear values for Cases 1 and 2 as shown in Table 2306.2.1(3). The values shown are applicable to Cases 3, 4, 5, and 6 as shown in Table 2306.2.1(3), providing fasteners at all continuous panels edges are spaced in accordance with the boundary fastener spacing.

e. The minimum nominal depth of framing members shall be three inches nominal. The minimum nominal width of framing members not located at boundaries or adjoining panel edges shall be two inches.

f. High load diaphragms shall be subject to special inspection in accordance with Section 1704.6.1.

g. For shear loads of normal or permanent load duration as defined by the AF&PA NDS, the values in the table above shall be multiplied by 0.63 or 0.56, respectively.

TABLE 2306.2.1(4)--continued

ALLOWABLE SHEAR (POUNDS PER FOOT) FOR WOOD STRUCTURAL PANEL BLOCKED DIAPHRAGMS UTILIZING MULTIPLE ROWS OF FASTENERS (HIGH LOAD DIAPHRAGMS) WITH FRAMING OF DOUGLAS FIR-LARCH OR SOUTHERN PINE[a] FOR SEISMIC LOADING[b,f,g] FOR STRUCTURES ASSIGNED TO SEISMIC DESIGN CATERGORY D, E, OR F

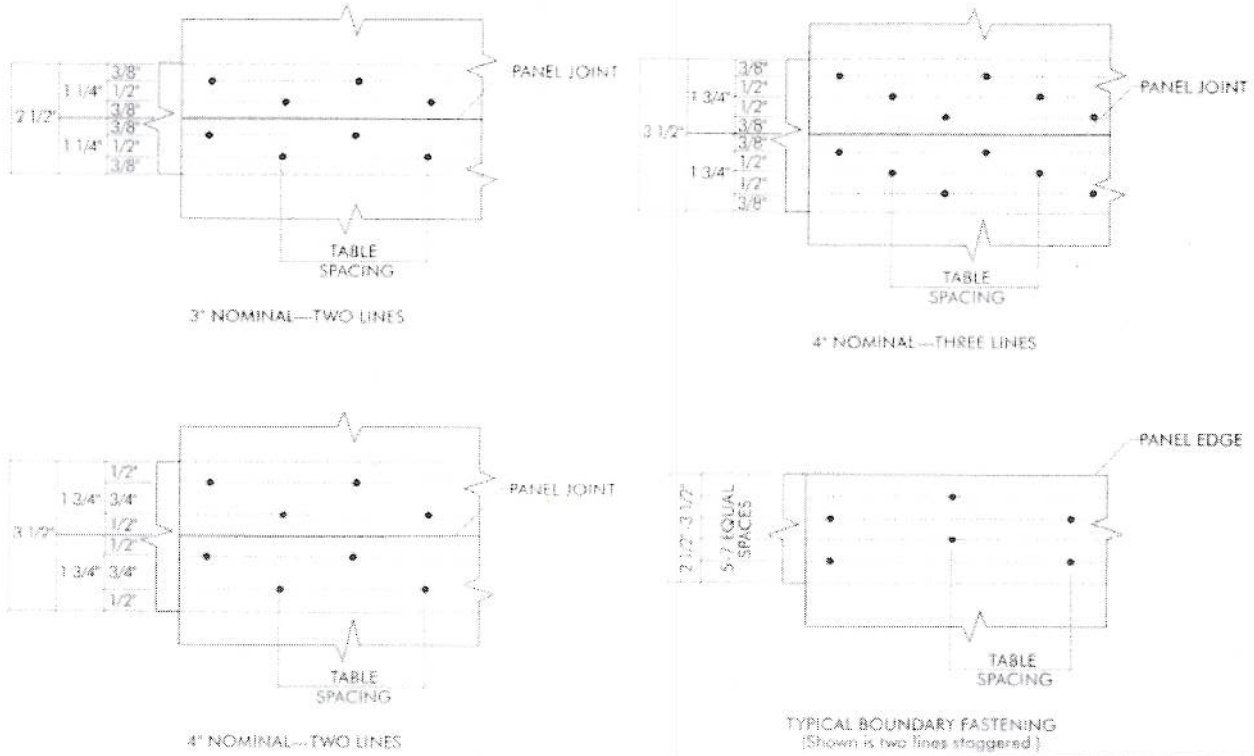

NOTE: SPACE PANEL END AND EDGE JOINT 1/8-INCH. REDUCE SPACING BETWEEN LINES OF NAILS AS NECESSARY TO MAINTAIN MINIMUM 3/8-INCH FASTENER EDGE MARGINS, MINIMUM SPACING BETWEEN LINES IS 3/8-INCH.

SECTION 63. Section 2306.3 is hereby amended to read as follows:

2306.3 Wood structural panel shear walls.

Wood structural panel shear walls shall be designed and constructed in accordance with AF&PA SDPWS. Wood structural panel shear walls are permitted to resist horizontal forces using the allowable shear capacities set forth in Table 2306.3(1). For structures assigned to Seismic Design Category D, E or F, the allowable shear capacities shall be set forth in Table 2306.3(2). Allowable shear capacities in Table 2306.3(1) are permitted to be increased 40 percent for wind design.

Wood structural panel shear walls used to resist seismic forces in structures assigned to Seismic Design Category D, E, or F shall not be less than 4 feet by 8 feet (1219 mm by 2438 mm), except at boundaries and at changes in framing. Wood structural panel thickness for shear walls shall not be less than 3/8 inch thick and studs shall not be spaced at more than 16 inches on center.

The maximum allowable shear value for three-ply plywood resisting seismic forces in structures assigned to Seismic Design Category D, E, or F is 200 pounds per foot (2.92 kn/m). Nails shall be placed not less than 1/2 inch (12.7 mm) in from the panel edges and not less than 3/8 inch (9.5mm) from the edge of the connecting members for shear greater than 350 pounds per foot (5.11kN/m). Nails shall be placed not less than 3/8 inch (9.5 mm) from panel edges and not less than 1/4 inch (6.4 mm) from the edge of the connecting members for shears of 350 pounds per foot (5.11kN/m) or less.

Wood structural panel shear walls fastened with staples shall not be used to resist seismic forces in structures assigned to Seismic Design Category D, E, or F.

Exception: Staples may be used for wood structural panel shear walls when the allowable shear values are substantiated by cyclic testing and approved by the Building Official.

Wood structural panel shear walls used to resist seismic forces in structures assigned to Seismic Design Category D, E, or F shall be applied directly to the framing members.

SECTION 64. Table 2306.3 is hereby amended to read as follows:

TABLE 2306.3(1)

ALLOWABLE SHEAR (POUNDS PER FOOT) FOR WOOD STRUCTURAL PANEL SHEAR WALLS WITH FRAMING OF DOUGLAS FIR-LARCH OR SOUTHERN PINE[a] FOR WIND OR SEISMIC LOADING[b, h, i, j, l, m]

. . .

SECTION 65. Table 2306.3(2) is hereby added to read as follows:

TABLE 2306.3(2)

ALLOWABLE SHEAR (POUNDS PER FOOT) FOR WOOD STRUCTURAL PANEL SHEAR WALLS WITH FRAMING OF DOUGLAS FIR-LARCH OR SOUTHERN PINE[a] FOR SEISMIC LOADING[b, h, j, k, l] FOR STRUCTURES ASSIGNED TO SEISMIC DESIGN CATEGORY D, E, OR F

PANEL GRADE	MINIMUM NOMINAL PANEL THICKNESS (inch)	MINIMUM FASTENER PENETRATION IN FRAMING (inches)	ALLOWABLE SHEAR VALUE FOR SEISMIC FORCES PANELS APPLIED DIRECTLY TO FRAMING				
			COMMON NAIL SIZE	Fastener spacing at panel edges (inches)			
				6	4	3	2[e]
Structural I sheathing	3/8	1 3/8	8d (2½"x0.131" common)	200	200	200	200
	7/16	1 3/8	8d (2½"x0.131" common)	255	395	505	670
	15/32	1 3/8	8d (2½"x0.131" common)	280	430	550	730
		1 1/2	10d (3"x0.148" common)	340	510	665[f]	870
Sheathing, plywood siding[g] except Group 5 Species	3/8[c]	1 3/8	8d (2½"x0.113")	160	200	200	200

For SI: 1 inch = 25.4 mm, 1 foot = 25.4 mm, 1 pound per foot = 14.5939 N/m.

a. For framing of other species: (1) Find specific gravity for species of lumber in AF&PA NDS; (2) For nails find shear value from table above for nail size for actual grade and multiply value by the following adjustment factor: Specific Gravity

Adjustment Factor = [1-(0.5-SG)], where SG = Specific Gravity of the framing lumber. This adjustment factor shall not be greater than 1.

b. Panel edges backed with 2-inch nominal or thicker framing. Install panels either horizontally or vertically. Space fasteners maximum 6 inches on center along intermediate framing members for 3/8-inch and 7/16-inch panels installed on studs spaced 24 inches on center. For other conditions and panel thickness, space fasteners maximum 12 inches on center on intermediate supports.

c. Three-eighth (3/8)-inch panel thickness or siding with a span rating of 16 inches on center is the minimum recommended where applied direct to framing as exterior siding. For grooved panel siding, the nominal panel thickness is the thickness of the panel measured at the point of nailing.

d. Allowable shear values are permitted to be increased to values shown for 15/32-inch sheathing with same nailing provided (a) studs are spaced a maximum of 16 inches on center, or (b) panels are applied with long dimension across studs.

e. Framing at adjoining panel edges shall be 3 inches nominal or thicker, and nails shall be staggered where nails are spaced 2 inches on center or less.

f. Framing at adjoining panel edges shall be 3 inches nominal or thicker, and nails shall be staggered where both of the following conditions are met:

(1) 10d (3"x0.148") nails having penetration into framing of more than 1-1/2 inches; and

(2) nails are spaced 3 inches on center or less.

g. Values apply to all-veneer plywood. Thickness at point of fastening on panel edges governs shear values.

h. Where panels applied on both faces of a wall and nail spacing is less than 6 inches o.c. on either side, panel joints shall be offset to fall on different framing members. Or framing shall be 3-inch nominal or thicker at adjoining panel edges and nails at all panel edges shall be staggered.

i. Where shear design values exceed 350 pounds per linear foot, all framing members receiving edge nailing from abutting panels shall not be less than a single 3-inch nominal member, or two 2-inch nominal members fastened together in accordance with Section 2306.1 to transfer the design shear value between framing members. Wood structural panel joint and sill plate nailing shall be staggered at all panel edges. See Section 4.3.6.1 and 4.3.6.4.3 of AF&PA SDPWS for sill plate size and anchorage requirements.

j. Galvanized nails shall be hot dipped or tumbled.

k. For shear loads of normal or permanent load duration as defined by the AF&PA NDS, the values in the table above shall be multiplied by 0.63 or 0.56, respectively.

l. The maximum allowable shear value for three-ply plywood resisting seismic forces is 200 pounds per foot (2.92 kn/m).

SECTION 66. Section 2306.7 is hereby amended to read as follows:

2306.7 Shear walls sheathed with other materials.

Shear walls sheathed with portland cement plaster, gypsum lath, gypsum sheathing, or gypsum board shall be designed and constructed in accordance with AF&PA SDPWS. Shear walls sheathed with these materials are permitted to resist horizontal forces using the allowable shear capacities set forth in Table 2306.7. Shear walls sheathed with portland cement plaster, gypsum lath, gypsum sheathing, or gypsum board shall not be used to resist seismic forces in structures assigned to Seismic Design Category E or F.

Shear walls sheathed with lath, plaster, or gypsum board shall not be used below the top level in a multi-level building for structures assigned to Seismic Design Category D.

. . .

SECTION 67. Section 2308.3.4 is hereby amended to read as follows:

2308.3.4 Braced wall line support.

. . .

Exception: For structures with a maximum plan dimension not over 50 feet (15,240 mm), continuous foundations are required at exterior walls only for structures not assigned to Seismic Design Category D, E, or F.

SECTION 68. Section 2308.12.2 is hereby amended to read as follows:

2308.12.2 Concrete or masonry.

. . .

Exception: Stone and masonry veneer is permitted to be used in the first story above grade plane in Seismic Design Category D, provided the following criteria are met:

. . .

5. Anchored masonry and stone wall veneer shall not exceed 5 inches (127 mm) in thickness, shall conform to the requirements of Chapter 14, and shall not extend more than 5 feet (1524 mm) above the first story finished floor.

SECTION 69. Section 2308.12.4 is hereby amended to read as follows:

2308.12.4 Braced wall line sheathing.

Braced wall lines shall be braced by one of the types of sheathing prescribed by Table 2308.12.4 as shown in Figure 2308.9.3. The sum of lengths of braced wall panels at each braced wall line shall conform to Table 2308.12.4. Braced wall panels shall be distributed along the length of the braced wall line and start at not more than 8 feet (2438 mm) from each end of the braced wall line. Panel sheathing joints shall occur over studs or blocking. Sheathing shall be fastened to studs, top and bottom plates, and at panel edges occurring over blocking. Wall framing to which sheathing used for bracing is applied shall be nominal 2-inch-wide [actual $1^1/_2$ inch (38 mm)] or larger members and spaced a maximum of 16 inches on center.

~~Cripple walls having a stud height exceeding 14 inches (356 mm) shall be considered a story for the purpose of this section and shall be braced as required for braced wall lines in accordance with Table 2309.12.4. Where interior braced wall lines occur without a continuous foundation below, the length of parallel exterior cripple wall~~

~~bracing shall be one and one-half times the lengths required by Table 2308.12.4. Where the cripple wall sheathing type used is Type S-W and this additional length of bracing cannot be provided, the capacity of Type S-W sheathing shall be increased by reducing the spacing of fasteners along the perimeter of each piece of sheathing to 4 inches (102 mm) o.c.~~

Exception: Braced wall panels required by Section 2308.12.4 may be eliminated when all of the following requirements are met:

1. One story detached Group U occupancies not more than 25 feet in depth or length.

2. The roof and three enclosing walls are solid sheathed with 15/32 inch nominal thickness wood structural panels with 8d common nails placed 3/8 inches from panel edges and spaced not more than 6 inches on center along all panel edges and 12 inches on center along intermediate framing members. Wall openings for doors or windows are permitted provided a minimum 4-foot-wide wood structural braced panel with minimum height to length ratio of 2 to 1 is provided at each end of the wall line and that the wall line be sheathed for 50 percent of its length.

Wood structural panel sheathing shall be a minimum of 15/32 inch thick nailed with 8d common nails placed 3/8 inches from panel edges and spaced not more than 6 inches on center and 12 inches on center along intermediate framing members.

Braced wall panel construction types shall not be mixed within a braced wall line.

SECTION 70. Table 2308.12.4 is hereby amended to read as follows:

TABLE 2308.12.4

WALL BRACING IN SEISMIC DESIGN CATEGORIES D AND E

(Minimum Length of Wall Bracing per each 25 Linear Feet of Braced Wall Line [a])

. . .

a. Minimum length of panel bracing of one face of the wall for S-W sheathing shall be at least 4'-0" long or both faces of the wall for G-P sheathing shall be at least 8'-0" long; h/w ratio shall not exceed 2:1. For S-W panel bracing of the same material on two faces of the wall, the minimum length is permitted to be one-half the tabulated value but the h/w ratio shall not exceed 2:1 and design for uplift is required.

b. G-P = gypsum board, ~~fiberboard, particleboard, lath and~~portland cement, plaster, or gypsum sheathing boards; S-W = wood structural panels ~~and diagonal wood sheathing~~.

c. Nailing as specified below shall occur at all panel edges at studs, at top and bottom plates and, where occurring, at blocking:

For 1/2-inch gypsum board, 5d (0.113 inch diameter) cooler nails at 7 inches on center;

For 5/8-inch gypsum board, No 11 gage (0.120 inch diameter) cooler nails at 7 inches on center;

For gypsum sheathing board, 1-3/4 inches long by 7/16-inch head, diamond point galvanized nails at 4 inches on center;

For gypsum lath, No. 13 gage (0.092 inch) by 1-1/8 inches long, 19/64-inch head, plasterboard at 5 inches on center;

For Portland cement plaster, No. 11 gage (0.120 inch) by $1^1/_2$ inches long, $^7/_{16}$- inch head at 6 inches on center;

~~For fiberboard and particleboard, No. 11 gage (0.120 inch) by $1^1/_2$ inches long, $^7/_{16}$- inch head, galvanized nails at 3 inches on center.~~

d. S-W sheathing shall be a minimum of 15/32" thick nailed with 8d common nails placed 3/8 inches from panel edges and spaced not more than 6 inches on center and 12 inches on center along intermediate framing members.

SECTION 71. Section 2308.12.5 is hereby amended to read as follows:

2308.12.5 Attachment of sheathing.

Fastening of braced wall panel sheathing shall not be less than that prescribed in Table 2308.12.4 or 2304.9.1. Wall sheathing shall not be attached to framing members by adhesives. Staple fasteners in Table 2304.9.1 shall not be used to resist or transfer seismic forces in structures assigned to Seismic Design Category D, E, or F.

Exception: Staples may be used to resist or transfer seismic forces when the allowable shear values are substantiated by cyclic testing and approved by the Building Official.

All braced wall panels shall extend to the roof sheathing and shall be attached to parallel roof rafters or blocking above with framing clips (18 gauge minimum) spaced at maximum 24 inches (6096 mm) on center with four 8d nails per leg (total eight 8d nails per clip). Braced wall panels shall be laterally braced at each top corner and at

maximum 24 inch (6096 mm) intervals along the top plate of discontinuous vertical framing.

SECTION 72. Section 3401.8 is hereby added to read as follows:

3401.8 Parapets and appendages.

3401.8.1 Whenever the Building Official determines by inspection that, as a result of inadequate construction or bracing to resist horizontal forces, an existing parapet or appendage attached to and supported by an exterior wall of a building is likely to become a hazard to life or property in the event of earthquake disturbance, and such parapet or appendage is not an immediate hazard or danger as described in Section 102 of this Code, the Building Official may provide the owner of the building or other person or agent in control of the building where such parapet or other appendage exists, with a written notice specifying the hazards and the inadequacies of construction or bracing. The owner of the building or other person or agent in control of the building shall, within 12 months from the date of such written notice, eliminate the hazard as set forth below. Any person receiving notice as set out in this Section may appeal, in the manner provided by Section 102.4 of this Code, to the building Board of Appeals.

3401.8.2 The parapet or appendage shall be removed and the remainder of the wall anchored at the roof line, or it shall be reconstructed so that it will conform structurally as near as it is practicable to do so with requirements of Chapter 16 of this Code, or it shall be otherwise braced and strengthened in a manner satisfactory to the Building Official, so that it will resist a reasonable degree of horizontal forces without becoming dislodged with danger of falling.

3401.8.3 Where, in the opinion of the Building Official, it is necessary to open a portion of roof, wall, or ceiling of a building in order to determine the structural condition of any parapet or appendage, the Building Official may order the owner to make such opening and the owner shall comply with said order at the owner's sole cost and expense.

SECTION 73. Section 3401.9 is hereby added to read as follows:

3401.9 Existing glass.

Whenever the Building Official determines by inspection that an existing glass installation in rooms having an occupant load of more than 100 persons or a means of egress serving an occupant load of more than 100 persons, as determined by Chapter 10, is likely to become a hazard in the event of accidental human impact as described in Section 2406.4 and such installation does not comply with the provisions of this Code for glazing in such locations, the Building Official may provide the owner of the building or other person or agent in control of the building where such glazing exists with a written notice of such condition. The owner of the building or other person or agent in control of the building shall, within 90 days after receiving said notice, replace such glass or otherwise cause the installation to conform with the requirements of this Code.

SECTION 74. Section 6502.6 is hereby amended to read as follows:

6502.6 Materials.

. . .

EXCEPTION: Surfaces of signs not more than 55 feet (16764 mm) above grade may be of approved plastic material which has a flame-spread rating of 25 or less when tested in accordance with Standard 8-1, of the Uniform Building Code, 1997 Edition, as published by the International Conference of Building Officials, in the way intended for use.

SECTION 75. Section 6503 is hereby amended to read as follows:

6503 Ground Signs.

. . .

Approved plastic as defined in Chapter 26 ~~and Section 217~~ may be used for surface of signs exceeding 55 feet (16 764 mm) in height providing the sign is constructed of noncombustible materials.

SECTION 76. Section 6602.1 is hereby amended to read as follows:

6602.1 General.

Amusement devices or structures shall be regulated by this Section. Amusement devices or structures located within amusement buildings must also comply with the requirements of Sections 411~~,~~ and ~~903.2.13~~903.2.11.6.

SECTION 77. Section 6703 is hereby amended to read as follows:

6703 LIMITATIONS

No provisions of this ~~c~~Chapter shall require or be construed to require devices on exit doors or on sleeping room emergency exits contrary to the requirements specified in Section ~~1026~~1029.

SECTION 78. Section 6709.2 is hereby amended to read as follows:

6709.2

. . .

EXCEPTIONS:

. . .

4. In residential occupancies, doors not required by Section ~~1026~~1029 or 1008 may be equipped with security-type hardware which requires a key to release from the interior side of the door if the sleeping rooms are protected with a fire-warning system as set forth in Section ~~903.2.7~~903.2.8.

SECTION 79. Section 6710 is hereby amended to read as follows:

6710 DOORS--SLIDING GLASS DOORS

. . .

Locking devices installed on sliding glass doors providing the exit required by Section 1003 or providing for the emergency escape or rescue required by Section ~~1026~~1029 shall be releasable from the inside without the use of a key, tool, or excessive force.

SECTION 80. Section 6715.1 is hereby amended to read as follows:

6715.1 Locking devices installed on windows providing the emergency egress required by Section ~~1026~~1029 shall be releasable from the inside without use of a key, tool, or excessive force.

SECTION 81. Section 9506.3 is hereby amended to read as follows:

9506.3 Development of Anchor Loads into the Diaphragm.

Development of anchor loads into roof and floor diaphragms shall comply with Section ~~1633.2.9, item 4~~9506.10 of this Code.

. . .

In wood diaphragms, anchorage shall not be accomplished by use of toenails or nails subject to withdrawal, nor shall wood ledgers, top plates, or framing be used in cross-grain bending or cross-grain tension. The continuous ties required by Section ~~1633.2.9, item 4~~9506.10 shall be in addition to the diaphragm sheathing.

. . .

SECTION 82. Section 9506.10 is hereby added to read as follows:

9506.10 Diaphragms.

Diaphragms supporting concrete walls shall have continuous ties or struts between diaphragm chords to distribute the anchorage forces specified in Section 12.11 of ASCE 7. The spacing of continuous ties shall not exceed 25 feet (7620 mm). Added chords of subdiaphragms may be used to form subdiaphragms to transmit the anchorage forces to the main continuous crossties. The maximum diaphragm shear used to determine the depth of the subdiaphragms shall not exceed 300 pounds per foot (4.38 kN/m). The maximum length-to-width ratio of the wood structural subdiaphragm shall be 2 ½:1.

SECTION 83. Chapter 96 is hereby added to read as follows:

CHAPTER 96

EARTHQUAKE HAZARD REDUCTION FOR EXISTING UNREINFORCED MASONRY BEARING WALL BUILDINGS

9601 PURPOSE

This Chapter promotes public safety and welfare by reducing the risk of death or injury otherwise resulting from earthquake damage to certain buildings constructed before March 20, 1933, which have insufficient resistance to moderate or strong earthquakes.

The provisions of this Chapter constitute minimum standards for structural seismic resistance established primarily to reduce the risk of loss of life and injury. Compliance with these standards will not necessarily prevent loss of life or injury or prevent earthquake damage to an existing building. This Chapter shall not require existing electrical, plumbing, mechanical, or fire safety systems to be altered unless they constitute a hazard to life or property.

This Chapter provides systematic procedures and standards for identification and classification of these buildings based on their present use. Priorities, time periods, and standards are also established under which these buildings are required to be structurally analyzed and anchored. Where the analysis identifies deficiencies, this Chapter requires the building to be strengthened or demolished.

9602 SCOPE

The provisions of this Chapter shall apply to buildings which, prior to March 20, 1933, were constructed or were under construction and which have unreinforced masonry bearing walls as defined herein. This Chapter shall also apply to buildings for which a building permit was issued prior to March 20, 1933, and which have unreinforced masonry bearing walls as defined herein.

EXCEPTION: This Chapter shall not apply to dwellings and lodging houses defined as Group R-3 Occupancies nor to accessory buildings defined as Group U Occupancies.

9603 DEFINITIONS

For the purposes of this Chapter, the applicable definitions contained in this Code and the following definitions shall apply:

ESSENTIAL BUILDING. An essential building under the scope of this Chapter is defined as any building conforming to the definition of essential facilities as set forth in this Code.

HIGH-RISK BUILDING. A high-risk building is any building, other than an essential building, having an occupant load of 100 or more as determined by Chapter 10 of this Code.

EXCEPTION: A high-risk building shall not include the following:

1. Any building having exterior walls braced with masonry crosswalls or woodframe crosswalls spaced less than 40 feet (12192 mm) apart in each story.

Crosswalls shall be full-story height with a minimum length of 1-1/2 times the story height.

2. Any building used for its intended purpose, as determined by the building official, for less than 20 hours per week.

HISTORICAL BUILDING. A historical building is any building designated as a historical building by the federal, state, or County government or an agency thereof.

LOW-RISK BUILDING. A low-risk building is any building, other than an essential building, having an occupant load of less than 20 as determined by Chapter 10 of this Code.

MEDIUM-RISK BUILDING. A medium-risk building is any building, not classified as a high-risk building or an essential building, having an occupant load of 20 or more as determined by Chapter 10 of this Code.

9604 RATING CLASSIFICATIONS

The rating classifications identified in Table 96-A are hereby established and each building within the scope of this Chapter shall be placed in one such rating classification by the Building Official. The total occupant load of the entire building as determined by Chapter 10 of this Code shall be used to determine the rating classification.

EXCEPTION: For purposes of this Chapter, portions of buildings constructed to act independently when resisting seismic forces may be placed in separate rating classifications.

9605 GENERAL REQUIREMENTS

9605.1 Time limitations.

The owner of each building within the scope of this Chapter shall, upon service of an order and within the time limits set forth in this Chapter, cause a structural analysis to be made of the building by a licensed civil or structural engineer or architect. If the building does not comply with standards specified in this Chapter and Appendix Chapter A1 of Part 10, Title 24 of the California Code of Regulations, then the owner shall cause the building to be structurally altered to conform to such standards or shall cause the building to be demolished.

The owner of a building within the scope of this Chapter shall comply with the requirements set forth above by submitting plans that comply with the requirements of Section 9608 to the Building Official for review within the stated time limits of the following items:

1. Within 270 days after service of the order, a structural analysis, which is subject to approval by the Building Official and which shall demonstrate that the building meets the minimum requirements of this Chapter; or

2. Within 270 days after service of the order, the structural analysis and plans for structural alterations of the building to comply with this Chapter; or

3. Within 120 days after service of the order, plans for the installation of wall anchors in accordance with the requirements specified in Appendix Chapter A1 of Part 10, Title 24 of the California Code of Regulations; or

4. Within 270 days after service of the order, plans for the demolition of the building.

9605.2 Time limitations to obtain building permit, commence and complete work.

After plans are submitted and approved by the Building Official, the owner shall obtain a building permit and then commence and complete the required alteration or demolition within the time limits set forth in Table 96-B. These time limits shall begin to run from the date the order is served in accordance with Section 9606.2, except that the time limit to commence structural alterations or demolition shall begin to run from the date the building permit is issued.

An owner electing to comply with Item 3 of Section 9605.1 is also required to comply with Item 2 or 4 of Section 9605.1 provided, however, that the 270-day period provided for in Item 2 or 4 of Section 9605.1 and the time limits for obtaining a building permit and to complete structural alterations or building demolition set forth in Table 96-B shall be extended in accordance with Table 96-C. Each such extended time limit shall begin to run from the date the order is served in accordance with Section 9606, except that the time limit to commence structural alterations or demolition shall begin to run from the date the building permit is issued.

9606 ADMINISTRATION

9606.1 Order--service.

The Building Official shall, in accordance with the priorities set forth in Table 96-C, issue an order as provided in this Section to the owner of each building within the scope of this Chapter.

Prior to the service of an order as set forth in Table 96-C, a bulletin may be issued to the owner as shown upon the last equalized assessment roll of a building considered by the Building Official to be within the scope of this Chapter. The bulletin may contain information the Building Official deems appropriate. The bulletin may be issued by mail or in person.

9606.2 Order--priority of service.

Priorities for the service of the order for buildings within the scope of this Chapter shall be in accordance with the rating classification as shown in Table 96-C. Within each separate rating classification, the priority of the order shall normally be based on the occupant load of the building. The owner of buildings housing the largest occupant loads shall be served first. The minimum time period prior to the service of the order as shown in Table 96-C shall be measured from the effective date of this Chapter. The Building Official may, upon receipt of a written request from the owner, order such owner to bring the building into compliance with this Chapter prior to the normal service date for such building set forth in this Chapter.

9606.3 Order--contents.

The order shall be in writing and shall be served either personally or by certified or registered mail upon the owner as shown on the last equalized assessment roll of the building. The order shall specify that the building has been determined by the Building Official to be within the scope of this Chapter and, therefore, is required to meet the minimum seismic standards of this Chapter. The order shall specify the rating

classification of the building and shall be accompanied by a copy of Section 9605 which sets forth the owner's alternatives and time limits for compliance.

9606.4 Appeal from order.

The owner of the building may appeal the Building Official's initial determination that the building is within the scope of this Chapter to the Building Board of Appeals established by Section 105. Such appeal shall be filed with the Board within 60 days from the service date of the order described in Section 9606.3. Any such appeal shall be decided by the Board no later than 90 days after the date that the appeal is filed. Such appeal shall be made in writing and the grounds thereof shall be stated clearly and concisely. Appeals or requests for modifications from any other determinations, orders or actions by the building official pursuant to this Chapter shall be made in accordance with the procedures established in Sections 104.2.7 and 105.

9606.5 Recordation.

At the time that the Building Official serves the aforementioned order, the Building Official shall also file with the office of the County Recorder a certificate stating that the subject building is within the scope of this Chapter and is a potentially earthquake hazardous building. The certificate shall also state that the owner thereof has been ordered to structurally analyze the building and to structurally alter or demolish the building where compliance with this Chapter has not been demonstrated.

If the building is either demolished, found not to be within the scope of this Chapter, or is structurally capable of resisting minimum seismic forces required by this Chapter as a result of structural alterations or an analysis, the Building Official shall file

with the office of the County Recorder a form terminating the status of the subject building as being classified within the scope of this Chapter.

9606.6 Abatement orders.

If the owner of the subject building fails to comply with any order issued by the Building Official pursuant to this Chapter within any of the time limits set forth in Section 9605, then the Building Official shall verify that the record owner of this building has been properly served. If the order has been served on the record owner, then the Building Official may order that the entire building be vacated and that the building remain vacated until such order has been complied with. If compliance with such order has not been accomplished within 90 days after the date the building has been ordered vacated or such additional time as may have been granted by the Building Board of Appeals, then the Building Official may order its demolition in accordance with the provisions of Section 102.1 of this Code.

9606.7 Hearing.

An owner who has been served with an abatement order as described in Section 9606.6 may request a hearing before the Building Board of Appeals to request postponement of County action leading to demolition, vacation of building, or other abatement procedure. All such requests shall be accompanied by a rehearing fee as specified in Section 105. At such a rehearing, the Board will consider all evidence submitted and after such consideration may find that a postponement is warranted and so order, or may find that further postponement is unwarranted and order any abatement work considered necessary to be performed by a specified date after which

date the Building Official shall cause such work to be performed or completed without further notice. Nothing in this Section shall prevent the Board itself or the Building Official from bringing any matter before the Board for rehearing.

9606.8 Violation.

It shall be unlawful to own, use, occupy, maintain, or be in control of a building for which an order requiring compliance with this Chapter has been served where said order has not been complied with.

9606.9 Prosecution.

In case the owner shall fail, neglect, or refuse to comply with the directions in the Order (if neither the owner nor any other person requests a hearing) or with any order of the Building Board of Appeals, the owner shall be guilty of a misdemeanor and the Building Official may cause such owner of the building or property to be prosecuted as a violator of this Code.

9606.10 Other abatement procedures.

The provisions of this Chapter shall not in any manner limit or restrict the County or the District Attorney from enforcing County Ordinances or abating public nuisances in any other manner provided by law.

9607 HISTORICAL BUILDINGS

9607.1 General.

The standards and procedures established by this Chapter shall apply in all aspects to a historical building except that as a means to preserve original architectural

elements and facilitate restoration, a historical building may, in addition, comply with the special provisions set forth in this Section.

9607.2 Unburned clay masonry or adobe.

Existing walls of adobe construction shall conform with the following:

9607.2.1 Unreinforced adobe masonry walls shall not exceed a height or length-to-thickness ratio of five for exterior-bearing walls and must be provided with a reinforced bond beam at the top, interconnecting all walls. Minimum beam depth shall be 6 inches (152 mm) and a minimum width of 8 inches (203 mm) less than the wall width. Minimum wall thickness shall be 18 inches (457 mm) for exterior-bearing walls and 10 inches (254 mm) for adobe partitions. No adobe structures shall exceed one story in height unless the historic evidence indicates a two-story height. In such cases, the height-to-thickness ratio shall be the same as above for the first floor based on the total two-story height, and the second floor wall thickness shall not exceed the ratio five by more than 20 percent. Bond beams shall be provided at the roof and second-floor levels.

9607.2.2 Foundation footings shall be reinforced concrete under newly reconstructed walls and shall be 50 percent wider than the wall above, soil conditions permitting, except that the foundation wall may be 4 inches (102 mm) less in width than the wall above if a rock, burned brick, or stabilized adobe facing is necessary to provide authenticity.

9607.2.3 Existing unstabilized brick and adobe brick masonry shall have an average compressive strength of 225 pounds per square inch (1551 kPa) when

tested in accordance with ASTM C 67. One sample out of five may have a compressive strength of not less than 188 pounds per square inch (1296 kPa). Unstabilized brick may be used where existing bricks are unstabilized and where the building is not susceptible to flooding conditions or direct exposure. Adobe may be allowed a maximum value of 3 pounds per square inch (21 kPa) for shear with no increase for lateral forces.

9607.2.4 Mortar may be of the same soil composition and stabilization as the brick in lieu of cement mortar.

9607.2.5 Nominal tension stresses due to seismic forces normal to the wall may be neglected if the wall meets thickness requirements and shear values allowed by this Section.

9607.3 Archaic materials.

Allowable stresses for archaic materials not specified in this Code shall be based on substantiating research data or engineering judgment, subject to the Department's satisfaction.

9607.4 Alternative materials and state historical building code advisory review.

Alternative materials, design, or methods of construction will be considered as set forth in Section 104.2.8. In addition, when a request for an alternative proposed design, material, or method of construction is being considered, the Department may file a written request for an opinion to the State Historical Building Code Advisory Board for

its consideration, advice or findings in accordance with the State Historical Building Code.

9608 INFORMATION REQUIRED ON PLANS

9608.1 General.

In addition to the seismic analysis required elsewhere in this Chapter, the licensed engineer or architect responsible for the seismic analysis of the building shall determine and record the information required by this Section and shall provide a complete set of plans, which show in detail compliance with all the requirements of this Chapter and Appendix Chapter A1 of Part 10, Title 24 of the California Code of Regulations.

9608.2 Construction details.

The following requirements with appropriate construction details shall be made part of the submitted plans.

9608.2.1 All unreinforced masonry walls shall be anchored at the roof and all floor levels as specified in Appendix Chapter A1 of Part 10, Title 24 of the California Code of Regulations, or by an approved equivalent method.

9608.2.2 Diaphragm chord stresses of horizontal diaphragms shall be developed in existing materials or by addition of new materials.

9608.2.3 Where trusses and beams other than rafters or joists are supported on masonry, independent secondary columns shall be installed to support vertical loads of the roof or floor members.

9608.2.4 Parapets and exterior wall appendages not capable of resisting the forces specified in this Chapter shall be removed, stabilized, or braced to ensure that the parapets and appendages remain in their original position.

9608.2.5 All deteriorated mortar joints in unreinforced masonry walls shall be pointed with Type S or N mortar. Prior to any pointing, the wall surface must be raked and cleaned to remove loose and deteriorated mortar. Pointing shall be done under the continuous inspection of a registered special masonry or concrete inspector. At the conclusion of the project, the inspector shall submit a written report to the Building Official setting forth the portion of work inspected.

9608.2.6 Repair details of any cracked or damaged unreinforced masonry wall required to resist forces specified in this Chapter.

9608.3 Existing construction.

The following existing construction information shall be made part of the approved plans:

1. The type and dimensions of existing walls and the size and spacing of floor and roof members.

2. The extent and type of existing wall anchorage to floors and roof.

3. The extent and type of parapet corrections which were preformed in accordance with Chapter 34 of this Code.

4. Accurately dimensioned floor plans and masonry wall elevations showing dimensioned openings, piers, wall thickness, and heights.

5. The location of cracks or damaged portions or unreinforced masonry walls requiring repairs.

6. The type of interior wall surfaces and ceilings, and if reinstallation or anchoring of existing plaster is necessary.

7. The general condition of the mortar joints and if the joints need pointing.

9609 INTERPRETATION OF THIS CHAPTER

Removal and replacement of unreinforced masonry interior or exterior walls with materials and construction conforming to the requirements of this Code for new buildings constitutes compliance with this Chapter. Upon completion of such work, the remainder of the structure is, therefore, subject to the provisions of Chapter 34, "Existing Structures." Nothing in this Section shall be construed to mean that a building within the scope of this Chapter is not subject to Section 102, "Unsafe Buildings," or to Chapter 99 of this Code.

TABLE 96-A
RATING CLASSIFICATIONS

TYPE OF BUILDING	CLASSIFICATION
Essential building	I
High-risk building	II
Medium-risk building	III
Low-risk building	IV

TABLE 96-B
TIME LIMITS FOR COMPLIANCE

REQUIRED ACTION BY OWNER	OBTAIN BUILDING PERMIT WITHIN[1]	COMMENCE ALTERATION WITHIN	COMPLETE ALTERATION WITHIN[1]
Structural alterations or building demolition	1 year	180 days[2]	3 years
Wall anchor	180 days	270 days[1]	1 year

[1] Measured from date of service of the order.
[2] Measured from date of building permit issuance.

TABLE 96-C
EXTENSIONS OF TIME AND SERVICE PRIORITIES

RATING CLASSIFICATION	OCCUPANT LOAD	EXTENSION OF TIME IF WALL ANCHORS ARE INSTALLED	MINIMUM TIME PERIODS FOR SERVICE OF ORDER
I (Highest priority)	Any	1 year	90 days
II	100 or more	1 year	180 days
III-A	100 or more	1 year	1 year
III-B	More than 50, but less than 100	1 year	2 years
III-C	More than 19, but less than 51	1 year	3 years
IV (Lowest priority)	Less than 20	1 year	4 years

SECTION 84. Chapter 98 is hereby added to read as follows:

CHAPTER 98

UNOCCUPIED BUILDINGS, STRUCTURES, AND SPECIAL HAZARDS

9801 SCOPE

9801.1 General.

The provisions of this Chapter shall apply to all unoccupied buildings or structures that are not properly secured, locked or closed and that are accessible, and to Special Hazards, as defined in Section 9802.

9802 DEFINITIONS

The following words and terms shall, for the purpose of this Chapter, and as used elsewhere in this Code, have the meanings shown herein:

SPECIAL HAZARD. Any swimming pool (greater than 18 inches in depth), and any mine shaft, test hole, well, pit, or similar excavation that exceeds 6 inches in any lateral dimension and 3 feet in depth and that is accessible.

9803 ORDER TO SECURE BUILDINGS, STRUCTURES OR SPECIAL HAZARDS

9803.1 Order to secure buildings or structures.

When the Building Official determines that any unoccupied building or structure is not properly secured, locked, or closed and is accessible to juveniles, transients, and undesirables and is a health, fire, or safety hazard to the adjacent community, the Building Official shall be authorized to serve the record owner and (if not the owner) the person having control of such building or structure with an order to secure or close the same forthwith so as to prevent unauthorized persons from gaining access thereto.

9803.2 Order to secure special hazards.

When the Building Official determines that any Special Hazard is a health or safety hazard to the adjacent community, the Building Official shall be authorized to serve the record owner and (if not the owner) the person having control of such property with an order to remove, backfill, or secure the same forthwith so as to prevent unauthorized persons from gaining access thereto.

9803.3 Contents of order.

In addition to ordering that the building or structure be secured or closed, or the Special Hazard be removed, backfilled, or secured, the Order by the Building Official shall contain the following:

1. Notice that the record owner or (if not the owner) the persons having control of such building, structure, or Special Hazard may request a hearing to review the Building Official's Order, by submitting a written request therefor to the Building Official not later than 10 days after receipt of the Order.

2. Notice that, if the required work is not performed within 10 days after service of notice, and if a timely demand for hearing has not been made, then the County may perform the work at the expense of the said owner.

9804 NOTIFICATION TO OTHER PERSONS

The Building Official may, but is not required to, send copies of any order provided for in Section 9803 to the holder of any mortgage, trust deed, or other liens or encumbrance, the holder or owner of any lease, or the holder of any other estate or interest in or to the building or structure or the land upon which it is located.

9805 POSTING

A copy of any order provided for in Section 9803 shall be posted in a conspicuous place on the building, structure, or property which is the subject of the order. Such order shall remain posted until the building is lawfully occupied or the Special Hazard is sufficiently removed, secured, closed, covered, fenced, backfilled, or provided with some equivalent protection to the satisfaction of the Building Official. No person shall remove such order without the written permission of the Building Official. No person, other than a person having the right of occupancy, shall enter the building.

Further, the Building Official may cause to be posted on such building a sign or signs to read:

VACATED BUILDING, DO NOT ENTER OR DAMAGE BY ORDER OF THE DEPARTMENT OF PUBLIC WORKS, BUILDING AND SAFETY DIVISION, COUNTY OF LOS ANGELES

9806 SERVICE

Proper service of any order or notice required by this Chapter shall be by personal service or by first-class mail upon the record owner and (if not the owner) the person having control of such building, structure, or property.

In the event the Building Official is unable to serve any order or notice on any person as specified above, proper service on such person shall be by posting the notice in a conspicuous place on the building, structure, or property.

The failure of any owner or other person to receive an order or notice shall not affect in any manner the validity of any proceedings under this Chapter.

9807 REQUEST FOR HEARING

Within 10 days after service upon the record owner of an order pursuant to Section 9803, the said record owner or any other person deeming himself or herself aggrieved may request a hearing.

9808 NOTICE OF HEARING

Upon receiving a request for hearing, the Building Official shall set the matter for hearing before the Building Rehabilitation Appeals Board or the Code Enforcement Appeals Board and shall serve notice not less than 10 days prior thereto, upon the person requesting such hearing and upon every person upon whom the order provided for in Section 9803 was served.

9809 HEARING PROCEDURE

Except to the extent inconsistent with any provision of this Chapter, the procedures for the hearing under this Chapter before the Building Rehabilitation Appeals Board or the Code Enforcement Appeals Board shall be the same as the procedures provided in this Code for the hearings relating to substandard buildings.

9810 SECURING BUILDINGS, STRUCTURES, OR SPECIAL HAZARDS BY COUNTY

9810.1 If, as of the 10th day following service of the order described in Section 9803, no hearing has been requested pursuant to Section 9807 and the building, structure, or Special Hazard has not been sufficiently secured, closed, covered, fenced, backfilled, or provided with some equivalent protection, in compliance with said order, the County may perform the work required to secure or close the building or structure or abate the Special Hazard. The record owner and any other person on whom the order described in Section 9803 was served shall be liable for the costs incurred by the County in performing such work.

9810.2 If, after a hearing pursuant to this Chapter, the Building Rehabilitation Appeals Board or the Code Enforcement Appeals Board determines to affirm the order given by the Building Official pursuant to Section 9803, and the building, structure, or Special Hazard has not been sufficiently removed, secured, closed, covered, fenced, backfilled, or provided with some equivalent protection within the time specified by the Building Rehabilitation Appeals Board or the Code Enforcement Appeals Board, then the County may perform the work required to secure or close the

building or structure or abate the Special Hazard. The record owner and any other person on whom the order described in Section 9803 was served shall be liable for the costs incurred by the County in performing such work.

9811 COUNTY DEPARTMENTS

9811.1 Internal services department.

At the request of the Building Official, the Director of the Internal Services Department shall sufficiently secure, close, cover, fence, or provide with some equivalent protection any building, structure, or Special Hazard subject to the provisions of Section 9810, so as to limit unauthorized access thereto. The Director of Internal Services shall keep an accurate record of the cost of such work.

9811.2 Road maintenance division.

At the request of the Building Official, the Road Maintenance District Engineer shall backfill or provide with some equivalent protection any Special Hazard subject to the provisions of Section 9810, so as to limit unauthorized access thereto. The Road Maintenance District Engineer shall keep an accurate record of the cost of such work.

9812 NOTIFICATION OF COSTS

Whenever the County incurs costs in connection with removing, securing, closing, covering, fencing, backfilling, or providing some equivalent protection for any building, structure, or Special Hazard pursuant to this Chapter, the Building Official shall notify the record owner and (if not the owner) the person having control of such building, structure, or property, in writing, of the amount of said costs. The record owner and (if not the owner) the person having control of the building, structure, or property, shall pay

to the Building Official the amount of said costs, within ten (10) days of the date of the written notice.

9813 SUBSTANDARD OR UNSAFE BUILDINGS

Nothing in this Chapter shall be deemed to preclude, prohibit, or restrict the Building Official from securing the prompt demolition or repair of buildings found to be substandard or unsafe under other provisions of the Code.

9814 EMERGENCY PROCEDURES

Whenever either the Sheriff or the Chief of the Fire Department determines that the conditions described in Section 9803.1 or 9803.2 constitute such an immediate hazard that access to the building, structure, or Special Hazard must be sufficiently removed, secured, closed, covered, fenced, backfilled, or provided with some equivalent protection forthwith or within less than the designated period and the Sheriff or the Chief of the Fire Department so notifies the Building Official, then the Building Official shall limit access to such building, structure, or Special Hazard through the Director of the Internal Services Department (as provided in Section 9811.1) or Road Maintenance Division (as provided in Section 9811.2) or by contract, or otherwise, after giving such notice to the record owner or the person in charge, or both as the circumstances will permit or without any notice whatever when, in the opinion of the Sheriff or Chief of the Fire Department, immediate action is necessary.

The provisions of this Chapter providing for hearings shall apply to any person having any right, title, or interest in any building secured pursuant to this Section. Such person may request a hearing as to the necessity and reasonable cost of the work

performed pursuant to Section 9814 within 10 days after the building is secured or within 10 days after receiving notice of such work.

SECTION 85. Section 9901 is hereby amended to read as follows:

9901 SCOPE

9901.1 General.

The provisions of this Chapter shall apply to all substandard buildings, substandard structures, and substandard property, as defined in this Chapter.

9901.2 Existing Buildings.

Occupancies in existing buildings may be continued ~~as provided in Section 3401~~ except in such structures as are ~~found to be substandard as defined in this Chapter and~~ ordered vacated ~~or as are found to be unsafe as defined~~ in ~~Section 102~~accordance with this Code.

SECTION 86. Section 9902 is hereby amended to read as follows:

9902 DEFINITIONS

. . .

9902.4 DEMOLITION

Whenever the word "demolish" or "demolishment" is used in this Chapter, it shall include the removal of the resulting debris from such demolition and the protection by filling of excavations exposed by such demolition and abandonment of sewer or other waste disposal facilities as may be required by this Code or other applicable codes, ~~O~~ordinances, or laws.

. . .

9902.7 PUBLIC NUISANCE

A public nuisance is one which affects at the same time an entire community or neighborhood, or any considerable number of persons, although the extent of the annoyance or damage inflicted upon individuals may be unequal.

SECTION 87. Section 9903 is hereby amended to read as follows:

9903 DEFINITION OF SUBSTANDARD BUILDING

. . .

~~**9903.2** Any unfinished building or structure which has been in the course of construction an unreasonable time, in no event less than five years, and where the appearance and other conditions of said unfinished building or structure are such that the unfinished structure substantially detracts from the appearance of the immediate neighborhood or reduces the value of property in the immediate neighborhood, or is otherwise a nuisance, shall be deemed and hereby is declared to be a substandard building.~~

SECTION 88. Section 9904 is hereby amended to read as follows:

9904 SUBSTANDARD CONDITIONS

Substandard building conditions shall include, but are not limited to, the following, when found in buildings or structures which are vacant or occupied by unauthorized persons.

9904.1 Inadequate Sanitation.

9904.1.1 Lack of hot and cold running water to plumbing fixtures ~~in a hotel or dwelling unit~~.

. . .

~~**9904.1.5** Violation of any applicable provision of Ordinance No. 7583, an Ordinance adopting a Health Code, adopted August 25, 1959, as determined and reported to the Building Official by the health officer.~~

. . .

9904.3 Inadequate or Hazardous Wiring.

9904.3.1 ~~Lack of required electrical lighting or convenience outlets. In existing residential occupancies, every habitable room is required to contain at least two supplied electric convenience outlets or one such convenience outlet and one supplied electric fixture. Every water closet compartment, bathroom, laundry room, furnace room and public hallway in such occupancies is required to contain at least one supplied electric fixture.~~ All wiring except that which conformed with all applicable laws in effect at the time of installation and which has been maintained in good condition and is being used in a safe manner.

. . .

9904.5 Inadequate or Faulty Mechanical Equipment.

9904.5.1 Lack of safe, adequate heating facilities in a dwelling~~, apartment house or hotel~~.

. . .

9904.14 Abandoned Buildings.

Abandoned buildings are ~~A~~all buildings or portions thereof which are abandoned, open, or vandalized or both.

~~**9904.15 Unfinished Moved Buildings or Structures.**~~

~~Buildings or structures or portions thereof as described in Section 3404~~.

SECTION 89. Section 9905 is hereby amended to read as follows:

9905 SUBSTANDARD PROPERTY

. . .

~~**9905.6** Trailers, campers, boats and other mobile equipment stored for unreasonable periods in yard areas contiguous to streets or highways and causing depreciation of nearby property values.~~

~~**9905.7**~~ Inoperable or abandoned motor vehicles, trailers, campers, boats and other mobile equipment stored for unreasonable periods on the premises and causing depreciation of nearby property values.

9905.~~8~~7 Attractive nuisances dangerous to children in the form of:

1. Abandoned and broken equipment, or

2. Neglected machinery~~.~~; or

3. Swimming pools, mine shafts, test holes, wells, pits, or similar excavations that are not properly secured, locked, covered, closed, or rendered inaccessible.

9905.~~9~~8 Broken or discarded furniture and household equipment left in yard areas for unreasonable periods.

9905.~~10~~9 Clothesline in front yard areas.

9905.~~11~~10 Garbage cans stored in front or side yards and visible from a public street except when placed in places of collection at the times permitted ~~and in full~~

~~compliance with Section 1707 of Ordinance No. 5860, entitled The License Ordinance, adopted November 7, 1951~~.

9905.~~12~~11 Packing boxes and other debris stored in yards and visible from public streets for unreasonable periods.

~~**9905.13** Neglect of premises:~~

~~1. To spite neighbors, or~~

~~2. To influence zone changes, granting of exceptions or special-use permits, or~~

~~3. To cause detrimental effect upon nearby property or property values.~~

9905.~~14~~12 Maintenance of premises in such condition as to be detrimental to the public health, safety, or general welfare or in such manner as to constitute a public nuisance~~ as defined by Civil Code Section 3480~~.

9905.~~15~~13 Property, including, but not limited to, building exteriors which are maintained in such condition as to become so defective, unsightly, or in such condition of deterioration or disrepair that the same causes appreciable diminution of the property values of surrounding property or is materially detrimental to proximal properties and improvements. This includes, but is not limited to, the keeping or disposing of or the scattering over the property or premises of any of the following:

1. Lumber, junk, trash or debris~~,~~;

2. Abandoned, discarded, or unused objects of equipment such as automobiles, furniture, stoves, refrigerators, freezers, cans, or containers,

3. Stagnant water, or excavations~~,~~;or

4. Any device, decoration, design, fence, structure, clothesline, or vegetation which is unsightly by reason of its condition or its inappropriate location.

9905.~~16~~14 Maintenance of premises so out of harmony or conformity with the maintenance standards of adjacent properties as to cause substantial diminution of the enjoyment, use, or property values of such adjacent properties.

~~**9905.17** Property maintained (in violation of the rights of others) so as to establish a prevalence of depreciated values, impaired investments, and social and economic maladjustments to such an extent that the capacity to pay taxes is reduced and tax receipts from such particular area are inadequate for the cost of public services rendered therein.~~

9905.~~18~~15 Grading which does not meet the minimum standards set forth in Appendix J of this Code or which is done in violation of this Code or any other County or State law regulating grading.

SECTION 90. Section 9908 is hereby amended to read as follows:

9908 DETERMINATION BY BUILDING OFFICIAL

Whenever the Building Official determines by inspection that any existing building or portion thereof is substandard or any lot or other premises is substandard, or both, as defined in this Chapter, such building or premises, or both, are hereby declared a public nuisance, and the Building Official shall order the abatement of the nuisance by demolition, repair, or rehabilitation of the substandard building or portion thereof or, at the option of the party concerned, by demolition or demolishment thereof. The order also may require that the building be vacated if found to be unsafe in accordance with

Section 102 of Chapter 1. If the premises are substandard, the Building Official also may order that the substandard conditions be removed.

SECTION 91. Section 9910 is hereby amended to read as follows:

9910 NOTICE OF SUBSTANDARD BUILDING

. . .

The notice may require the owner or person in charge of the building or premises to complete the required repairs, improvements, demolition, or removal of the building or portions thereof within 30 days, or such other time limit as the Building Official may stipulate. Such notice may also require the building, or portion thereof, to be vacated if found to be unsafe in accordance with Section 102 of Chapter 1, and not reoccupied until the required repairs and improvements are completed, inspected, and approved by the Building Official. A person notified to vacate a substandard building by the Building Official shall vacate within the time specified in the order.

. . .

SECTION 92. Section 9914 is hereby amended to read as follows:

9914 OTHER INTERESTED PARTIES

If the Notice of Substandard Building or Property requires the repair or demolition of any building and if the demolition or other work necessary to remove the substandard conditions set forth in such notice is not completed within the time specified in such notice and the Building Official intends to directly proceed to demolish the substandard building or portions thereof, or cause such other work to be done to the extent necessary to eliminate the hazard or other substandard conditions which have been

found to exist and, by a document recorded in the office of the Registrar-Recorder/County Clerk prior to the recordation of the Declaration of Substandard Building or Property, whether such document describes the property or not, it appears that a person other than a party concerned has any right, title, lien, or interest in the property or any portion thereof, and such person has not previously been notified of the substandard building or property conditions or previously been served a copy of the Notice of Substandard Building or Property and the address of such person is known to the Building Official or can be ascertained by the exercise of due diligence, then the Building Official shall serve a copy of the Notice of Substandard Building or Property on such person as provided in this Chapter. Such person may request a hearing before the Building Rehabilitation Appeals Board. The request must be made in writing to the Board within 10 days of the receipt of the copy of the notice of substandard building or property. If a Notice of Substandard Property does not require the repair or demolition of any building, then no notice need be given to any person other than a party concerned.

SECTION 93. Section 9923 is hereby amended to read as follows:

9923 **ORDER: SUBSTANDARD BUILDING**

9923.1 When the Building Rehabilitation Appeals Board finds that the building is a substandard building, it is hereby declared a public nuisance and, based on its findings, the said Board shall order the abatement of this nuisance by barricading, demolition, repair, or rehabilitation of the substandard building or portion thereof or at the option of the party concerned, by the demolition or demolishment

thereof. The order also may require that the substandard building be vacated if found to be unsafe in accordance with Section 102 of Chapter 1.

. . .

SECTION 94. Section 9931 is hereby amended to read as follows:

9931 INTERFERENCE PROHIBITED

A person shall not obstruct, impede, or interfere with the Building Official or any representative of the Building Official, or with any person who owns or holds any interest or estate in a substandard building which has been ordered by the Building Official or by the Building Rehabilitation Appeals Board to be barricaded, repaired, vacated and repaired, or vacated and demolished or removed, or in any substandard property whenever the Building Official or such owner is engaged in barricading, repairing, vacating and repairing, or demolishing any such substandard building or removing any substandard conditions, pursuant to this Chapter, Section 102 of Chapter 1, or in the performance of any necessary act preliminary to or incidental to such work, or authorized or directed pursuant hereto.

SECTION 95. Section J101 is hereby amended to read as follows:

J101 GENERAL

J101.1 Scope.

The provisions of this ~~c~~Chapter apply to grading, excavation, and earthwork construction, including fills and embankments~~. Where conflicts occur between the technical requirements of this chapter and the geotechnical report, the geotechnical~~

~~report shall govern~~ and the control of storm water runoff from graded sites, including erosion sediments and construction-related pollutants.

The purpose of this chapter is to safeguard life, limb, property, and the public welfare by regulating grading on private property.

J101.2 Flood hazard areas.

The provisions of this ~~c~~Chapter shall not apply to grading, excavation, and earthwork construction, including fills and embankments, in floodways designated in Chapter 11.60 of Title 11 of the Los Angeles County Code or in floodways within flood hazard areas established in Section 1612.3 or in flood hazard areas where design flood elevations are specified but floodways have not been designated, unless it has been demonstrated through hydrologic and hydraulic analyses performed in accordance with standard engineering practice that the proposed work will not result in any increase in the level of the base flood.

J101.3 General hazards.

Whenever the Building Official determines that any existing excavation, embankment, or fill on private property has become a hazard to life and limb, or endangers property, or adversely affects the safety, use, or stability of a public way or drainage channel, the Building Official may give written notice thereof to the owner of the property upon which the excavation, embankment, or fill is located, or other person or agent in control of said property. Upon receipt of said notice, the owner or other person or agent in control of the property shall repair or eliminate such excavation,

embankment, or fill so as to eliminate the hazard, in conformance with the requirements of this Code, within the period specified in said notice.

J101.4 Safety precautions.

If at any stage of the work the Building Official determines by inspection that further grading as authorized is likely to endanger any public or private property or result in the deposition of debris on any public way or interfere with any existing drainage course, the Building Official may order the work stopped by notice in writing served on any persons engaged in doing or causing such work to be done, and any such person shall immediately stop such work. The Building Official may authorize the work to proceed if the Building Official finds adequate safety precautions can be taken or corrective measures incorporated in the work to avoid likelihood of such danger, deposition, or interference.

If the grading work as done has created or resulted in a hazardous condition, the Building Official shall give written notice requiring correction thereof as specified in section J101 of this Code.

J101.5 Protection of utilities. Both the permittee and the owner of the property on which the grading is performed shall be responsible for the prevention of damage to any public utilities or services.

J101.6 Protection of adjacent property. Both the permittee and owner of the property on which the grading is performed shall be responsible for the prevention of damage to adjacent property. No person shall excavate on land sufficiently close to the property line to endanger any adjoining public street, sidewalk,

alley, or other public or private property without taking adequate measures to support and protect such property from settling, cracking, or other damage that might result from the proposed work. Any person performing any grading that involves imported or exported materials shall take special precautions, as approved by the Building Official, to prevent such materials from being deposited on adjacent properties, any public way and/or any drainage course.

J101.7 Storm water control measures. The permittee and the owner of the property on which the grading is performed shall put into effect and maintain all precautionary measures necessary to protect adjacent water courses and public or private property from damage by erosion, flooding, and deposition of mud, debris, and construction-related pollutants originating from the site during grading and related construction activities.

J101.8 Maintenance of protective devices and rodent control. All drainage structures and other protective devices and all burrowing rodent control measures, as shown on the grading plans approved by the Building Official, shall be maintained in a good condition and, when necessary, promptly repaired by the permittee or the owner of the property on which grading has been performed or by any other person or agent in control of such property.

J101.9 Correlation with other sections. The provisions of this Chapter are independent of the provisions of Chapter 99 of this Code relating to building and property rehabilitation. This Section may be applied even though the same facts

have been used to determine that there is substandard property subject to the provisions of Chapter 99.

J101.10 Conditions of approval. In granting any permit under this code, the Building Official may include such conditions as may be reasonably necessary to prevent creation of a nuisance or hazard to public or private property. Such conditions may include, but shall not be limited to:

1. Improvement of any existing grading to comply with the standards of this Code.

2. Requirements for fencing of excavations or fills which would otherwise be hazardous.

SECTION 96. Section J102.1 is hereby amended to read as follows:

J102.1 Definitions. For the purposes of this ~~a~~Appendix ~~c~~Chapter, the terms, phrases, and words listed in this ~~s~~Section and their derivatives shall have the indicated meanings.

APPROVAL. When the proposed work or completed work conforms to this Chapter, as determined by and to the satisfaction of the Building Official.

AS-BUILT. See Section J105.12.

BEDROCK. The relatively solid, undisturbed rock in place either at the ground surface or beneath superficial deposits of alluvium, colluvium and/or soil.

BENCH. A relatively level step excavated into earth material on which fill is to be placed.

BEST MANAGEMENT PRACTICE (BMP). Practices, prohibitions of practices, or other activities to reduce or eliminate the discharge of pollutants to surface waters. BMPs include structural and nonstructural controls, management practices, operation and maintenance procedures, and system, design, and engineering methods."

BORROW. Earth material acquired from an off-site location for use in grading on a site.

CIVIL ENGINEER. A professional engineer registered in the State of California to practice in the field of civil works.

CIVIL ENGINEERING. The application of the knowledge of the forces of nature, principles of mechanics, and the properties of materials to the evaluation, design, and construction of civil works.

COMPACTION. The densification of a fill by mechanical means.

CUT. See Excavation.

DESILTING BASINS. Physical structures, constructed for the removal of sediments from surface water runoff.

DESIGN ENGINEER. The Civil Engineer responsible for the preparation of the grading plans for the site grading work.

DOWN DRAIN. A device for collecting water from a swale or ditch located on or above a slope, and safely delivering it to an approved drainage facility.

EARTH MATERIAL. Any rock, natural soil, or fill or any combination thereof.

ENGINEERING GEOLOGIST. A geologist experienced and knowledgeable in engineering geology shall mean a person holding a valid certificate of registration as a

geologist in the specialty of engineering geology issued by the State of California under the applicable provisions of the Geologist and Geophysicist Act of the Business and Professions Code.

ENGINEERING GEOLOGY. The application of geologic knowledge and principles in the investigation and evaluation of naturally occurring rock and soil for use in the design of civil works.

EROSION. The wearing away of the ground surface as a result of the movement of wind, water, or ice.

EXCAVATION. The removal of earth material by artificial means, also referred to as a cut.

FIELD ENGINEER. The Civil Engineer responsible for performing the functions as set forth in Section J105.3.

FILL. Deposition of earth materials by artificial means.

GEOTECHNICAL ENGINEER. See Soils Engineer.

GEOTECHNICAL HAZARD. An adverse condition due to landslide, settlement, and/or slippage. These hazards include, but are not limited to, loose debris, slopewash, and mud flows from natural or graded slopes.

GRADE. The vertical location of the ground surface.

GRADE, EXISTING. The grade prior to grading.

GRADE, FINAL. See Section J105.7.

GRADE, FINISHED. The grade of the site at the conclusion of all grading efforts.

GRADE, INITIAL. See Section J105.7.

GRADE, ROUGH. See Section J105.7.

GRADING. An excavation or fill or combination thereof.

KEY. A compacted fill placed in a trench excavated in earth material ~~beneath~~generally constructed at the toe of a slope.

LANDSCAPE ARCHITECT. A person who holds a certificate to practice landscape architecture in the State of California under the applicable landscape architecture provisions of Division 3, Chapter 3.5 of the Business and Professions Code.

LINE. The horizontal location of the ground surface.

PERMITTEE. See Section J105.6.

PRIVATE SEWAGE DISPOSAL SYSTEM. A septic tank with effluent discharging into a subsurface disposal field, into one or more seepage pits or into a combination of subsurface disposal field and seepage pit or of such other facilities as may be permitted in accordance with the procedures and requirements set forth in Title 28 of the Los Angeles County Code.

PROJECT CONSULTANTS. The professional consultants required by this Code which may consist of the design engineer, Field Engineer, Geotechnical Engineer, Engineering Geologist, and landscape architect as applicable to this Chapter.

PROFESSIONAL INSPECTION. The inspection required by this Code to be performed by the Project Consultants. Such inspections shall be sufficient to form an opinion relating to the conduct of the work.

SITE. A lot or parcel of land or contiguous combination thereof, under the same ownership, where grading is performed or permitted.

SLOPE. An inclined ground surface the inclination of which is expressed as a ratio of horizontal distance to vertical distance.

SOIL. Naturally occurring superficial deposits overlying parent bedrock.

SOILS ENGINEER (GEOTECHNICAL ENGINEER). A civil engineer experienced and knowledgeable in the practice of soils engineering.

SOILS ENGINEERING (GEOTECHNICAL ENGINEERING). The application of the principals of soils mechanics in the investigation, evaluation, and design of civil works involving the use of earth materials and the inspection or testing of construction thereof.

STORM DRAIN SYSTEM. A conveyance or system of conveyances, including roads with drainage systems, municipal streets, catch basins, curbs, gutters, ditches, and man-made channels, designed or used for collecting and conveying storm water.

STORM WATER POLLUTION PREVENTION PLAN. A site drawing with details, notes, and related documents that identify the measures proposed by the permittee to: (1) control erosion and prevent sediment and construction-related pollutants from being carried offsite by storm water, and (2) prevent non-storm water discharges from entering the storm drain system.

SURFACE DRAINAGE. Flows over the ground surface.

SOIL TESTING AGENCY. An agency regularly engaged in the testing of soils and rock under the direction of a Civil Engineer experienced in soil testing.

TERRACE. A relatively level step constructed in the face of a graded slope for drainage and maintenance purposes.

SECTION 97. Section J103 is hereby amended to read as follows:

J103 **PERMITS REQUIRED**

J103.1 **Permits required.** Except as exempted in Section J103.2, no grading shall be performed without first having obtained a permit ~~therefor~~ from the ~~b~~Building ~~o~~Official. A grading permit does not include the construction of retaining walls or other structures. A separate permit shall be obtained for each site and may cover both excavations and fills. Any Engineered Grading as described in Section J104 shall be performed by a contractor licensed by the State of California to perform the work described hereon. Regular Grading less than 5,000 cubic yards may require a licensed contractor if the Building Official determines that special conditions or hazards exist.

J103.2 **Exemptions.** A grading permit shall not be required for the following:

1. When approved by the Building Official, ~~G~~grading in an isolated, self-contained area, provided there is no danger to the public, and that such grading will not adversely affect adjoining properties.

. . .

7. Exploratory excavations performed under the direction of a ~~registered design professional~~ Geotechnical Engineer or Engineering Geologist. This shall not exempt grading of access roads or pads created for exploratory excavations. Exploratory excavations must not create a hazardous condition to adjacent properties or

the public in accordance with Section J101.3. Exploratory excavations must be restored to existing conditions, unless otherwise approved by the Building Official.

8. An excavation that does not exceed 50 cubic yards (38.3 m^3) and complies with one of the following conditions:

(a) Is less than 2 feet (610 mm) in depth.

(b) Does not create a cut slope greater than 5 feet (1524 mm) measured vertically upward from the cut surface to the surface of the natural grade and is not steeper than 2 units horizontal to 1 unit vertical (50 percent slope).

9. A fill not intended to support a structure that does not obstruct a drainage course and complies with one of the following conditions:

(a) Is less than 1 foot (0.3 m) in depth and is placed on natural terrain with a slope flatter than 5 units horizontal to 1 unit vertical (20 percent slope).

(b) Is less than 3 feet (915 mm) in depth at its deepest point measured vertically upward from natural grade to the surface of the fill, does not exceed 50 cubic yards, and creates a fill slope no steeper than 2 units horizontal to 1 unit vertical (50 percent slope).

(c) Is less than 5 feet (1524 mm) in depth at its deepest point measured vertically upward from natural grade to the surface of the fill, does not exceed 20 cubic yards, and creates a fill slope no steeper than 2 units horizontal to 1 unit vertical (50 percent slope).

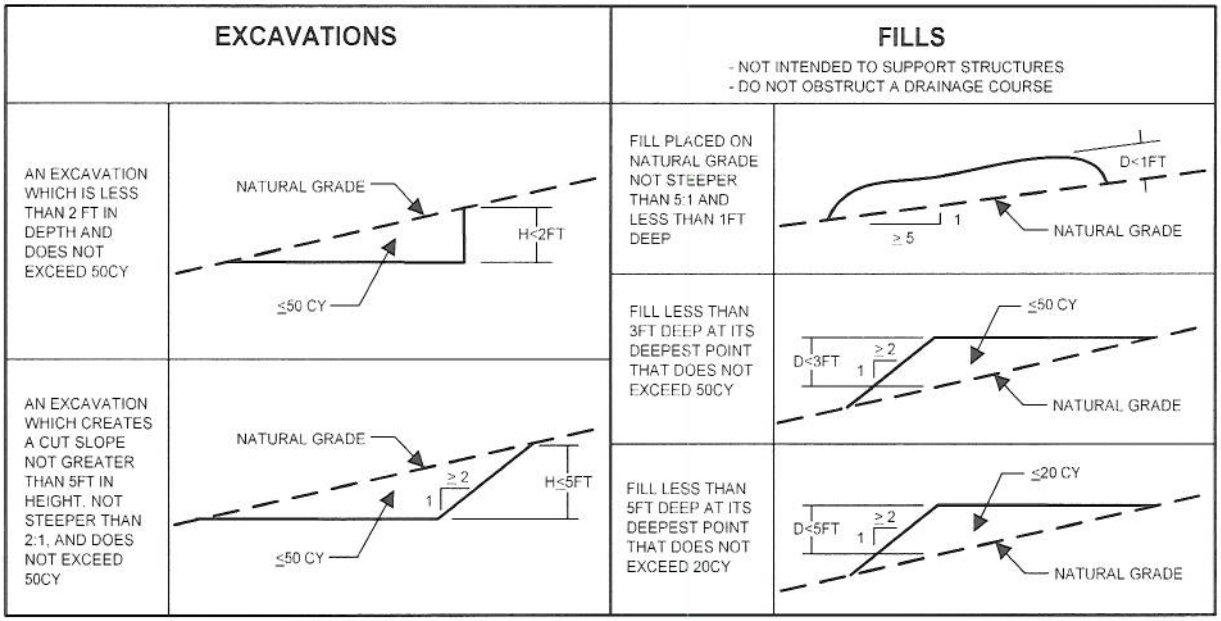

Figure J103.2

Exemption from the permit requirements of this ~~a~~Appendix shall not be deemed to grant authorization for any work to be done in any manner in violation of the provisions of this ~~c~~Code or any other laws or ordinances of this jurisdiction.

J103.3 Unpermitted grading. A person shall not own, use, occupy, or maintain any site containing unpermitted grading. For the purposes of this Code, unpermitted grading shall be defined as either of the following: (1) Grading that was performed, at any point in time, without the required permit(s) having first been obtained from the Building Official, pursuant to Section J103.1; or (2) Grading for which a permit was obtained pursuant to this Section, but which was not completed, pursuant to Section J105, prior to the expiration of the permit, pursuant to Section 106.5.4.

J103.4 Availability of permit at site. No person shall perform any grading that requires a permit under this Chapter unless a copy of the grading permit

and approved grading plans are in the possession of a responsible person and available at the site for the Building Official's reference.

J103.5 Grading fees. Fees shall be assessed in accordance with the provisions of this Section. The amount of the fees shall be as specified in Section 107 of this Code.

1. Plan Review Fees. When a plan or other data are required to be submitted, a plan review fee shall be paid at the time of submitting plans and specifications for review. Separate plan review fees shall apply to retaining walls or major drainage structures as required elsewhere in this Code. For excavation and fill on the same site, the fee shall be based on the volume of excavation or fill, whichever is greater.

2. Permit Fees. A fee for each grading permit shall be paid to the Building Official at the time of issuance of the permit. Separate permits and fees shall apply to retaining walls or major drainage structures as required elsewhere in this Code.

3. Site Inspection Fee. When the Building Official finds that a visual inspection of the site is necessary to establish drainage requirements for the protection of property, existing buildings, or the proposed construction, a site inspection shall be made during plan check of grading plans. A fee for such inspection shall be paid to the Building Official at the time of submitting plans and specifications for review.

J103.6 Compliance with zoning code. The Building Official may refuse to issue a grading permit for work on a site if either the proposed grading or the proposed land use for the site shown on the grading plan application does not comply

with the provisions of Title 22, entitled Planning and Zoning, of the Los Angeles County Code.

J103.7 Grading Security.

J103.7.1 Scope and Purpose. The Building Official may require a permittee or the owner(s) of the property on which the grading is proposed to occur to provide security, as a condition of the issuance of a grading permit for any grading involving more than 1,000 cubic yards (764.6 m^3). Where unusual conditions or special hazards exist, the Building Official may require security for grading involving less than 1,000 cubic yards (764.6 m^3). The purpose of the security shall be to guarantee the permittee's obligation to mitigate any hazardous conditions, including flood and geotechnical hazards, that may be created if the grading is not completed in accordance with the approved plans and specifications, and to complete any work that the Building Official determines is necessary to bring the property into compliance with this Chapter.

Security required by this Section may include incidental off-site grading on property contiguous with the site to be developed, provided written consent of the owner of such contiguous property is filed with the Building Official.

The Building Official may waive the requirements for a security for the following:

1. Grading being done by or for a governmental agency.

2. Grading necessary to remove a geotechnical hazard, where such work is covered by an agreement and security posted pursuant to the provisions of Title 21, entitled Subdivision Ordinance, of the Los Angeles County Code.

3. Grading on a site, not exceeding a slope of three horizontal to one vertical, provided such grading as determined by the Building Official will not affect drainage from or to adjacent properties.

4. Filling of holes or depressions, provided such grading will not affect the drainage from or to adjacent properties.

J103.7.2 Form of security. The security referred to in Section J103.7.1 shall be in one of the following forms:

1. A bond furnished by a corporate surety authorized to do business in this state.

2. Cash.

3. Savings and loan certificates or shares deposited and assigned to the County as provided in Chapter 4.36 of Title 4 of the Los Angeles County Code.

4. An instrument of credit from a financial institution subject to regulation by the state or federal government and pledging that funds in the amount required by the Building Official are on deposit and guaranteed for payment, or a letter of credit issued by such a financial institution.

J103.7.3 Amount of security. The amount of security shall be based on the number of cubic yards of material in either excavation or fill, whichever is greater, and the cost of all drainage or other protective devices or work necessary to eliminate potential geotechnical hazards. That portion of the security valuation based on the volume of material in either excavation or fill shall be computed as follows:

100,000 cubic yards or less - 50 percent of the estimated cost of grading work.

Over 100,000 cubic yards - 50 percent of the cost of the first 100,000 cubic yards plus 25 percent of the estimated cost of that portion in excess of 100,000 cubic yards.

When the rough grading has been completed in conformance with the requirements of this Code, the Building Official may, at his or her discretion, consent to a proportionate reduction of the security to an amount estimated to be adequate to ensure completion of the grading work, site development or planting remaining to be performed. The costs referred to in this section shall be as estimated by the Building Official.

J103.7.4 Conditions. All security shall include the conditions that the principal shall:

1. Comply with all of the provisions of this Code, applicable laws, and ordinances;

2. Comply with all of the terms and conditions of the grading permit;

3. Complete all of the work authorized by the permit.

J103.7.5 Term of Security. The term of each security shall begin upon the filing with the Building Official and the security shall remain in effect until the work authorized by the grading permit is completed and approved by the Building Official.

J103.7.6 Default Procedures. In the event that a permittee fails to comply with any provision of this Code or any grading for which a permit has been issued is not completed in accordance with the approved plans and specifications for said work or with all terms and conditions of the grading permit, the Building Official may

declare that a default has occurred. The Building Official shall give notice thereof to the principal and surety or financial institution executing the security, or to the owner in the case of a cash bond or assignment.

The Building Official may thereafter determine the work that is necessary to mitigate any hazardous or unsafe conditions on the site and cause such work to be performed.

Where the security consists of a bond or instrument of credit, the surety, or financial institution executing the security shall be responsible for the payment of all costs and expenses incurred by the Building Official in causing such work to be performed, up to the full amount of the security. In the case of cash security or assignment, the Building Official may pay all costs and expenses incurred in causing such work to be performed from the funds deposited, and return any unused portion of such deposit or funds to the person making said deposit or assignment.

J103.7.7 Right of entry. The Building Official or the authorized representative of any surety company or financial institution furnishing a security shall have access to the premises described in the permit for the purpose of inspecting the work.

In the event of default, as described in Section J103.7.6, the surety or financial institution furnishing the security or the Building Official, or any person employed or engaged on the behalf of any of these parties, shall have the right to go upon the premises to perform the mitigation work, as described in Section J103.7.6.

Neither the permittee, owner, or any other person shall interfere with or obstruct the ingress into or egress from any such premises, of any authorized representative of the surety or financial institution executing the security or the Building Official engaged to perform the mitigation work, as described in Section J103.7.6.

SECTION 98. Section J104 is hereby amended to read as follows:

J104 PERMIT APPLICATION AND SUBMITTALS

J104.1 Submittal requirements. In addition to the provisions of Section ~~105.3~~106, the applicant shall state the following:

1. ~~t~~The estimated quantities of excavation and fill.

2. The proposed land use for the site on which the grading is to be performed.

J104.2 Site plan requirements. In addition to the provisions of Section ~~107~~106, a grading plan shall show the existing grade and finished grade in contour intervals of sufficient clarity to indicate the nature and extent of the work and show in detail that it complies with the requirements of this ~~c~~Code. The plans shall show the existing grade on adjoining properties in sufficient detail to identify how grade changes will conform to the requirements of this ~~c~~Code.

J104.2.1 Grading designation. Grading in excess of 5,000 cubic yards (3,825 m^3) or that is proposed to support any structure shall be designated as "engineered grading." All engineered grading shall be performed in accordance with an approved grading plan and specifications prepared by a Civil Engineer, unless otherwise required by the Building Official.

Grading involving less than 5,000 cubic yards (3,825 m^3) and that will not support any structure shall be designated "regular grading" unless the permittee chooses to have the grading be designated as engineered grading, or the Building Official determines that, due to the existence of special conditions or unusual hazards, the grading should be designated as engineered grading.

J104.2.2 Regular grading requirements. In addition to the provisions of Section 106, and Section J104.2, an application for a regular grading permit shall be accompanied by two sets of plans in sufficient clarity to indicate the nature and extent of the work. The plans shall give the location of the work, the name of the owner, and the name of the person who prepared the plan. The plan shall include the following information:

1. General vicinity of the proposed site.

2. Limits and depths of cut and fill.

3. Location of any buildings or structures where work is to be performed, and the location of any buildings or structures within 15 feet (4572 mm) of the proposed grading.

4. Contours, flow areas, elevations, or slopes which define existing and proposed drainage patterns.

5. Storm water provisions in accordance with the requirements of Section 106.4.3 of this Code. See Section J111 for specific requirements.

6. Location of existing and proposed utilities, drainage facilities, and recorded public and private easements and restricted use areas.

7. Location of all recorded floodways as established by Chapter 11.60 of Title 11 of the Los Angeles County Code.

8. Location of all Special Flood Hazard Areas as designated and defined in Title 44, Code of Federal Regulations.

J104.2.3 Engineered grading requirements. In addition to the provisions of Section 106 and Section J104.2, an application for a permit for engineered grading shall be accompanied by four sets of plans and specifications, and supporting data consisting of a soils engineering report and engineering geology report.

Specifications shall contain information covering construction and material requirements. Plans shall be drawn to scale upon substantial paper or cloth and shall be of sufficient clarity to indicate the nature and extent of the work proposed and shall show in detail that the proposed work will conform to the provisions of this Code and all relevant laws, ordinances, rules, and regulations. The first sheet of each set of plans shall depict the location of the proposed work, the name and address of the owner, and the person by whom they were prepared.

The plans shall include or be accompanied by the following information:

1. General vicinity of the proposed site.

2. Property limits and accurate contours of existing ground and details of terrain and area drainage.

3. Limiting dimensions, elevations, or finish contours to be achieved by the grading, proposed drainage channels, and related construction.

4. Detailed plans of all surface and subsurface drainage devices, walls, cribbing, dams, and other protective devices to be constructed with, or as a part of, the proposed work. A map showing the drainage area and the estimated runoff of the area served by any drains shall also be provided.

5. Location of any existing or proposed buildings or structures located on the property on which the work is to be performed and the location of any buildings or structures on adjacent properties that are within 15 feet (4572 mm) of the property or that may be affected by the proposed grading operations.

6. Recommendations in the geotechnical report and the engineering geology report shall be incorporated into the grading plans or specifications. When approved by the Building Official, specific recommendations contained in the soils engineering report and the engineering geology report, that are applicable to grading, may be included by reference.

7. The dates of the geotechnical and engineering geology reports together with the names, addresses, and phone numbers of the firms or individuals who prepared the reports.

8. A statement of the quantities of material to be excavated and/or filled. Earth work quantities shall include quantities for geotechnical and geological remediation. In addition, a statement of the quantities of material to be imported or exported from the site.

9. A statement of the estimated starting and completion dates for proposed work.

10. A statement signed by the owner, acknowledging that a Field Engineer, Geotechnical Engineer, and Engineering Geologist, when appropriate, will be employed to perform the services required by this Code, when the Building Official requires that such professional persons be so employed. These acknowledgments shall be on a form furnished by the Building Official.

11. Storm water provisions are required to be shown on the grading plan in accordance with the requirement of Section 106.4.3 of the Code. See Section J111 for specific requirements.

12. A drainage plan for those portions of property proposed to be utilized as a building site (building pad), including elevations of floors with respect to finish site grade and locations of proposed stoops, slabs, and fences that may affect drainage.

13. Location and type of any proposed private sewage disposal system, including the location of the expansion area.

14. Location of existing and proposed utilities, drainage facilities, and recorded public and private easements and restricted use areas.

15. Location of all recorded floodways as established by Chapter 11.60 of Title 11 of the Los Angeles County Code.

16. Location of all Special Flood Hazard Areas as designated and defined in Title 44, Code of Federal Regulations.

J104.3 Geotechnical and engineering geology reports. ~~A geotechnical report prepared by registered design professionals shall be provided. The report shall contain at least the following:~~

~~1. The nature and distribution of existing soils;~~

~~2. Conclusions and recommendations for grading procedures;~~

~~3. Soil design criteria for any structures or embankments required to accomplish the proposed grading; and~~

~~4. Where necessary, slope stability studies, and recommendations and conclusions regarding site geology.~~

The geotechnical report required by Section J104.2.3 shall include data regarding the nature, distribution, and strength of existing soils, conclusions, and recommendations for grading procedures and design criteria for corrective measures, including buttress fills, when necessary, and an opinion on the adequacy for the intended use of sites to be developed by the proposed grading as affected by soils engineering factors, including the stability of slopes. All reports shall conform with the requirements of Section 111 and shall be subject to review by the Building Official. Supplemental reports and data may be required as the Building Official may deem necessary. Recommendations included in the reports and approved by the Building Official shall be incorporated in the grading plan or specifications.

The engineering geology report required by Section J104.2.3 shall include an adequate description of the geology of the site, conclusions, and recommendations regarding the effect of geologic conditions on the proposed development, and an opinion on the adequacy for the intended use of sites to be developed by the proposed grading, as affected by geologic factors. The engineering geology report shall include a geologic map and cross sections utilizing the most recent grading plan as a base. All

reports shall conform with the requirements of Section 111 and shall be subject to review by the Building Official. Supplemental reports and data may be required as the Building Official may deem necessary. Recommendations included in the reports and approved by the Building Official shall be incorporated in the grading plan or specifications.

EXCEPTION: A geotechnical or engineering geology report is not required where the ~~b~~Building ~~code o~~Official determines that the nature of the work applied for is such that a report is not necessary.

J104.4 Liquefaction study. For sites with mapped maximum considered earthquake spectral response accelerations at short periods (S_s) greater than 0.5g as determined by Section 1613, a study of the liquefaction potential of the site shall be provided, and the recommendations incorporated in the plans. A geotechnical investigation will be required when the proposed work is a "Project" as defined in California Public Resources Code section 2693, and is located in an area designated as a "Seismic Hazard Zone" as defined in Title 14 of the California Code of Regulations section 3722 on Seismic Hazard Zone Maps issued by the State Geologist under Public Resources Code section 2696.

EXCEPTION: 1. A liquefaction study is not required where the ~~b~~Building ~~o~~Official determines from established local data that the liquefaction potential is low.

~~2. [OSHPD 1, 2, & R] Exception 1 not permitted by OSHPD.~~

SECTION 99. Section J105 is hereby amended to read as follows:

J105 **INSPECTION**

J105.1 **General.** Grading ~~I~~inspections shall be governed by Section ~~109, Chapter 1, division II of this code~~108 and as indicated herein. Grading operations for which a permit is required shall be subject to inspection by the Building Official. In addition, professional inspection of grading operations shall be performed by the Field Engineer, Geotechnical Engineer, and the Engineering Geologist retained to provide such services in accordance with this Section for engineered grading and as required by the Building Official for regular grading.

J105.2 **Special and supplemental inspections.** The special inspection requirements of Section 1704.7 shall apply to work performed under a grading permit where required by the ~~b~~Building ~~o~~Official. In addition to the called inspections specified in Section J105.7, the Building Official may make such other inspections as may be deemed necessary to determine that the work is being performed in conformance with the requirements of this Code. The Building Official may require investigations and reports by an approved soil testing agency, Geotechnical Engineer and/or Engineering Geologist, and Field Engineer. Inspection reports shall be provided when requested in writing by the Building Official.

The Building Official may require continuous inspection of drainage devices by the Field Engineer in accordance with this Section when the Building Official determines that the drainage devices are necessary for the protection of the structures in accordance with Section 110.

J105.3 Field engineer. The Field Engineer shall provide professional inspection of those parts of the grading project within such engineer's area of technical specialty, oversee and coordinate all field surveys, set grade stakes, and provide site inspections during grading operations to ensure the site is graded in accordance with the approved grading plan and the appropriate requirements of this Code. During site grading, and at the completion of both rough grading and final grading, the Field Engineer shall submit statements and reports as required by Sections J105.11 and J105.12. If revised grading plans are required during the course of the work, they shall be prepared by a Civil Engineer and approved by the Building Official.

J105.4 Geotechnical engineer. The Geotechnical Engineer shall provide professional inspection of those parts of the grading project within such engineer's area of technical specialty, which shall include observation during grading and testing for required compaction. The Geotechnical Engineer shall provide sufficient observation during the preparation of the natural ground and placement and compaction of the fill to verify that such work is being performed in accordance with the conditions of the approved plan and the appropriate requirements of this Chapter. If conditions differing from the approved Geotechnical Engineering and engineering geology reports are encountered during grading, the Geotechnical Engineer shall provide revised recommendations to the permittee, the Building Official and the Field Engineer.

J105.5 Engineering geologist. The Engineering Geologist shall provide professional inspection of those parts of the grading project within such

engineer's area of technical specialty, which shall include professional inspection of the bedrock excavation to determine if conditions encountered are in conformance with the approved report. If conditions differing from the approved engineering geology report are encountered, the Engineering Geologist shall provide revised recommendations to the Geotechnical Engineer.

J105.6 Permittee. The permittee shall be responsible for ensuring that the grading is performed in accordance with the approved plans and specifications and in conformance with the provisions of this Code. The permittee shall engage project consultants, if required under the provisions of this Code, to provide professional inspections on a timely basis. The permittee shall act as a coordinator between the project consultants, the contractor, and the Building Official. In the event of changed conditions, the permittee shall be responsible for informing the Building Official of such change and shall provide revised plans for approval.

J105.7 Required inspections. The permittee shall call for an inspection by the Building Official at the following various stages of work and shall obtain the approval of the Building Official prior to proceeding to the next stage of work:

Pre-grade. Before any construction or grading activities occur at the site. Permittee shall schedule a pregrade inspection with the Building Official. The permittee shall ensure that all project consultants are present at the pre-grade inspection.

Initial. When the site has been cleared of vegetation and unapproved fill and has been scarified, benched, or otherwise prepared for fill. No fill shall have been placed prior to this inspection.

Rough. When approximate final elevations have been established, drainage terraces, swales, and other drainage devices necessary for the protection of the building sites from flooding have been installed, berms have been installed at the top of the slopes, and the statements required by Section J105.12 have been received.

Final. When grading has been completed, all drainage devices necessary to drain the building pad have been installed, slope planting has been established, irrigation systems have been installed, and the as-built plans and required statements and reports have been submitted.

J105.8 Notification of noncompliance. If, in the course of fulfilling their respective duties under this Chapter, the Field Engineer, the Geotechnical Engineer, or the Engineering Geologist determines that the work is not being done in conformance with this Chapter or the approved grading plans, the Field Engineer, Geotechnical Engineer, or the Engineering Geologist shall immediately report, in writing, the discrepancies and the recommended corrective measures to the permittee and to the Building Official.

J105.9 Transfer of responsibility. If the Field Engineer, the Geotechnical Engineer, or the Engineering Geologist of record is changed at any time after the grading plans required pursuant to Section J104.2.2 or J104.2.3 have been approved by the Building Official, the permittee shall immediately provide written notice of such change to the Building Official. The Building Official may stop the grading from commencing or continuing until the permittee has identified a replacement and the

replacement has agreed in writing to assume responsibility for those parts of the grading project that are within the replacement's area of technical competence.

J105.10 Non-inspected grading. No person shall own, use, occupy, or maintain any non-inspected grading. For the purposes of this Code, non-inspected grading shall be defined as any grading for which a grading permit was first obtained, pursuant to Section J103, supra, but which has progressed beyond any point requiring inspection and approval by the Building Official without such inspection and approval having been obtained.

J105.11 Routine field inspections and reports. Unless otherwise directed by the Building Official, the Field Engineer for all engineered grading projects shall prepare routine inspection reports and shall file these reports with the Building Official as follows:

1. Bi-weekly during all times when grading of 400 cubic yards or more per week is occurring on the site;

2. Monthly, at all other times; and

3. At any time when requested in writing by the Building Official.

Such reports shall certify to the Building Official that the Field Engineer has inspected the grading site and related activities and has found them in compliance with the approved grading plans and specifications, the building code, all grading permit conditions, and all other applicable ordinances and requirements. The reports shall conform to a standard "Report of Grading Activities" form which shall be provided by the Building Official.

J105.12 Completion of work. Upon completion of the rough grading work and at the final completion of the work, the following reports and drawings and supplements thereto are required for engineered grading or when professional inspection is otherwise required by the Building Official:

1. An "As-built" grading plan prepared by the Field Engineer retained to provide such services in accordance with Section J105.3 showing all plan revisions as approved by the Building Official. This shall include original ground surface elevations, as-built ground surface elevations, lot drainage patterns, and the locations and elevations of surface drainage facilities and the outlets of subsurface drains. As-built locations, elevations, and details of subsurface drains shall be shown as reported by the Geotechnical Engineer.

The As-built grading plan shall be accompanied by a certification by the Field Engineer that to the best of his or her knowledge, the work within the Field Engineer's area of responsibility was done in accordance with the final approved grading plan.

2. A report prepared by the Geotechnical Engineer retained to provide such services in accordance with Section J105.4, including locations and elevations of field density tests, summaries of field and laboratory tests, other substantiating data, and comments on any changes made during grading and their effect on the recommendations made in the approved soils engineering investigation report. The report shall include a certification by the Geotechnical Engineer that, to the best of his or her knowledge, the work within the Geotechnical Engineer's area of responsibility is in accordance with the approved soils engineering report and applicable provisions of this

Chapter. The report shall contain a finding regarding the safety of the completed grading and any proposed structures against hazard from landslide, settlement, or slippage.

3. A report prepared by the Engineering Geologist retained to provide such services in accordance with Section J105.5, including a final description of the geology of the site and any new information disclosed during the grading and the effect of such new information, if any, on the recommendations incorporated in the approved grading plan. The report shall contain a certification by the Engineering Geologist that, to the best of his or her knowledge, the work within the Engineering Geologist's area of responsibility is in accordance with the approved engineering geology report and applicable provisions of this Chapter. The report shall contain a finding regarding the safety of the completed grading and any proposed structures against hazard from landslide, settlement, or slippage. The report shall contain a final as-built geologic map and cross-sections depicting all the information collected prior to and during grading.

4. The grading contractor shall certify, on a form prescribed by the Building Official, that the grading conforms to said as-built plan and the approved specifications.

J105.13 Notification of completion. The permittee shall notify the Building Official when the grading operation is ready for final inspection. Final approval shall not be given until all work, including installation of all drainage facilities and their protective devices, and all erosion-control measures have been completed in accordance with the final approved grading plan, and all required reports have been submitted and approved.

J105.14 Change of ownership. Unless otherwise required by the Building Official, when a grading permit has been issued on a site and the owner sells the property prior to final grading approval, the new property owner shall be required to obtain a new grading permit.

SECTION 100. Section J106 is hereby amended to read as follows:

J106 EXCAVATIONS

J106.1 Maximum cut slope. The slope of cut surfaces shall be no steeper than is safe for the intended use, and shall be no steeper than two units horizontal to one unit vertical (50-percent slope) unless the owner or authorized agent furnishes a geotechnical or an engineering geology report, or both justifying a steeper slope. The reports must contain a statement by the Geotechnical Engineer or Engineering Geologist that the site was investigated and an opinion that a steeper slope will be stable and will not create a hazard to public or private property, in conformance with the requirements of Section 111. The Building Official may require the slope of the cut surfaces to be flatter in slope than 2 units horizontal to 1 unit vertical if the Building Official finds it necessary for the stability and safety of the slope.

EXCEPTIONS:

1. A cut surface may be at a slope of 1.5 units horizontal to one unit vertical (67 percent) provided that all the following are met:

1.1 It is not intended to support structures or surcharges.

1.2 It is adequately protected against erosion.

1.3 It is no more than 8 feet (2438 mm) in height.

1.4 It is approved by the ~~b~~Building ~~code o~~Official.

1.5 Ground water is not encountered.

~~2. A cut surface in bedrock shall be permitted to be at a slope of 1 horizontal to 1 vertical (100 percent).~~

J106.2 ~~***Earth Retaining Shoring. [OSHPD 1 & 4]***~~**Drainage.** Drainage, including drainage terraces and overflow protection, shall be provided as required by Section J109.

~~**J106.2.1 General.** The requirements of this section shall apply to temporary and permanent earth retaining shoring using soldier piles and lagging with or without tie-back anchors in soil or rock, only when existing or new OSHPD 1 or 4 facilities are affected. Shoring used as construction means and methods only, which does not affect existing or new OSHPD 1 or 4 facilities, are not regulated by OSHPD and shall satisfy the requirements of the authorities having jurisdiction. Design, construction, testing and inspection shall satisfy the requirements of this code except as modified in Sections J106.2.2 through J106.2.8.~~

~~**J106.2.2 Duration.** Shoring shall be considered temporary when elements of the shoring will be exposed to site conditions for a period of less than one (1) year, and shall be considered permanent otherwise. Permanent shoring shall account for the increase in lateral soil pressure due to earthquake. At the end of the construction period, the existing and new structures shall not rely on the temporary shoring for support in anyway. Wood components shall not be used for permanent shoring lasting more than two (2) years. Wood components of the temporary shoring~~

~~that may affect the performance of permanent structure shall be removed after the shoring is no longer required.~~

~~All components of the shoring shall have corrosion protection or preservative treatment for their expected duration.~~

~~Wood components of the temporary shoring that will not be removed shall be treated in accordance with AWPA~~

~~U1 (Commodity Specification A, Use Category 4B and Section 5.2), and shall be identified in accordance with Section 2303.1.8.1.~~

~~**J106.2.3 Surcharge.** Surcharge pressure due to footings, traffic or other sources shall be considered in design. If the footing surcharge is located within the semicircular distribution or bulb of earth pressure (when shoring is located close to a footings), lagging shall be designed for lateral earth pressure due to footing surcharge. Soil arching effects may be considered in the design of lagging. Underpinning of the footing may be used in lieu of designing the shoring and lagging for surcharge pressure. Alternatively, continuously contacting drilled pier shafts near the footings shall be permitted. The lateral surcharge design pressure shall be derived using Boussinesq equations modified for the distribution of stresses in an elastic medium due to a uniform, concentrated or line surface load as appropriate and soil arching effects.~~

~~**J106.2.4 Design and testing.** Except for the modifications as set forth in Sections J106.2.4.1 and J106.2.4.2 below, all prestressed rock and soil tie-back anchors shall be designed and tested in accordance with PTI Recommendations for Prestressed Rock and Soil Anchors (PTI-2004).~~

~~**J106.2.4.1 Geotechnical requirements.** The geotechnical report for the earth retaining shoring shall address the following:~~

~~1. Minimum diameter and minimum spacing for the anchors including consideration of group effects.~~

~~2. Maximum unbonded length and minimum bonded length of the tie-back anchors.~~

~~3. Maximum recommended anchor tension capacity based upon the soil or rock strength/grout bond and anchor depth/spacing.~~

~~4. Allowable bond stress at the ground / grout interface and applicable factor of safety for ultimate bond stress for the anchor. For permanent anchors, a minimum factor of safety of 2.0 shall be applied to ground soil interface as required by PTI-2004 Section 6.6.~~

~~5. Minimum grout pressure for installation and postgrout pressure for the anchor. The presumptive postgrout pressure of 300 psi may be used for all soil type.~~

~~6. Class I Corrosion Protection is required for all permanent anchors. The geotechnical report shall specify the corrosion protection recommendations for temporary anchors.~~

~~7. Performance test for the anchors shall be at a minimum of two (2) times the design loads and shall not exceed 80 percent of the specified minimum tensile strength of the anchor rod. A creep test is required for all prestressed anchors that are performance tested. All production anchors shall be tested at 150 percent of design~~

~~loads and shall not be greater than 70 percent of the specified minimum tensile strength of the anchor rod.~~

~~8. Earth pressure, surcharge pressure and the seismic increment of earth pressure loading, when applicable.~~

~~9. Maximum recommended lateral deformation at the top of the soldier pile, at the tie-back anchor locations and the drilled pier concrete shafts at the lowest grade level.~~

~~10. Allowable vertical soil bearing pressure, friction resistance and lateral passive soil resistance for the drilled pier concrete shafts and associated factors of safety for these allowable capacities.~~

~~11. Soil-pier shaft/pile interaction assumptions and lateral soil stiffness to be used in design for drilled pier concrete shaft or pile lateral loads.~~

~~12. Acceptable drilling methods.~~

~~13. Geotechnical observation and monitoring recommendations.~~

~~**J106.2.4.2 Structural requirements:**~~

~~1. Tendons shall be thread-bar anchors conforming to ASTM A 722.~~

~~2. Anchor design loads shall be based upon the load combinations in Section 1605A.3.1 and shall not exceed 60 percent of the specified minimum tensile strength of the tendons.~~

~~3. The anchor shall be designed to fail in grout bond to the soil or rock before pullout of the soil wedge.~~

~~4. Design of shoring system shall account for as-built locations of soil anchors considering all specified construction tolerances in Section J106.2.8.~~

~~5. Design of shoring system shall account for both short and long term deformation.~~

~~**J106.2.4.3 Testing of tie-back anchors:**~~

~~1. The geotechnical engineer shall keep a record at job site of all test loads and total anchor movement, and report their accuracy.~~

~~2. If a tie-back anchor initially fails the testing requirements, the anchor shall be permitted to be regrouted and retested. If anchor continues to fail, the followings steps shall be taken:~~

~~a. The contractor shall determine the cause of failure – variations of the soil conditions, installation methods, materials, etc.~~

~~b. Contractor shall propose a solution to remedy the problem. The proposed solution will need to be reviewed and approved by the geotechnical engineer, shoring design engineer and building official.~~

~~3. After a satisfactory test, each anchor shall be locked off in accordance with Section 8.4 of PTI 2004.~~

~~4. The shoring design engineer shall specify design loads for each anchor.~~

~~**J106.2.5 Construction.** The construction procedure shall address the following:~~

~~1. Holes drilled for piles/tie-back anchors shall be done without detrimental loss of ground, sloughing or caving of materials and without endangering previously installed shoring members or existing foundations.~~

~~2. Drilling of earth anchor shafts for tie-backs shall occur when the drill bench reaches two to three feet below the level of the tie-back pockets.~~

~~3. Casing or other methods shall be used where necessary to prevent loss of ground and collapse of the hole.~~

~~4. The drill cuttings from earth anchor shaft shall be removed prior to anchor installation.~~

~~5. Unless tremie methods are used, all water and loose materials shall be removed from the holes prior to installing piles/tie-backs.~~

~~6. Tie-back anchor rods with attached centralizing devices shall be installed into the shaft or through the drill casing. Centralizing device shall not restrict movement of the grout.~~

~~7. After lagging installation, voids between lagging and soil shall be backfilled immediately to the full height of lagging.~~

~~8. The soldier piles shall be placed within specified tolerances in the drilled hole and braced against displacement during grouting. Fill shafts with concrete up to top of footing elevation, rest of the shaft can generally be filled with lean concrete. Excavation for lagging shall not be started until concrete has achieved sufficient strength for all anticipated loads as determined by the shoring design engineer.~~

~~9. Where boulders and/or cobbles have been identified in the geotechnical reports, contractor shall be prepared to address boulders and/or cobbles that may be encountered during the drilling of soldier piles and tie-back anchors.~~

~~10. The grouting equipment shall produce grout free of lumps and indispensed cement. The grouting equipment shall be sized to enable the grout to be pumped in continuous operation. The mixer shall be capable of continuously agitating the grout.~~

~~11. The quantity of grout and grout pressure shall be recorded. The grout pressure shall be controlled to prevent excessive heave in soils or fracturing rock formations.~~

~~12. If postgrouting is required, postgrouting operation shall be performed after initial grout has set for 24-hours in the bond length only. Tie-backs shall be grouted over a sufficient length (anchor bond length) to transfer the maximum anchor force to the anchor grout.~~

~~13. Testing of anchors may be performed after postgrouting operations provided grout has reached strength of 3,000 psi as required by PTI-2004 Section 6.11.~~

~~14. Anchor rods shall be tensioned straight and true. Excavation directly below the anchors shall not continue before those anchors are tested.~~

~~J106.2.6 Inspection, survey monitoring and observation.~~

~~1. The shoring design engineer or his designee shall make periodic inspections of the job site for the purpose of observing the installation of shoring system, testing of tie-back anchors and monitoring of survey.~~

~~2. Testing, inspection and observation shall be in accordance with testing, inspection and observation requirements approved by the building official. The following activities and materials shall be tested, inspected, or observed by the special inspector and geotechnical engineer:~~

~~a. Sampling and testing of concrete in soldier pile and tie-back anchor shafts~~

~~b. Fabrication of tie-back anchor pockets on soldier beams~~

~~c. Installation and testing of tie-back anchors~~

~~d. Survey monitoring of soldier pile and tie-back load cells~~

~~e. Survey monitoring of existing buildings~~

~~3. A complete and accurate record of all soldier pile locations, depths, concrete strengths, tie-back locations and lengths, tie-back grout strength, quantity of concrete per pile, quantity of grout per tie-back and applied tie-back loads shall be maintained by the special inspector and geotechnical engineer. The shoring design engineer shall be notified of any unusual conditions encountered during installation.~~

~~4. Calibration data for each test jack, pressure gauge and master pressure gauge shall be verified by the special inspector and geotechnical engineer. The calibration tests shall be performed by an independent testing laboratory and within 120 calender days of the data submitted.~~

~~5. Monitoring points shall be established at the top and at the anchor heads of selected soldier piles and at intermediate intervals as considered appropriate by the geotechnical engineer.~~

~~6. Control points shall be established outside the area of influence of the shoring system to ensure the accuracy of the monitoring readings.~~

~~7. The periodic basis of shoring monitoring, as a minumum, shall be as follows:~~

~~a. Intitial monitoring shall be performed prior to any excavation.~~

~~b. Once excavation has begun, the periodic readings shall be taken weekly until excavation reaches the estimated subgrade elevation and the permanent foundation is complete.~~

~~c. If performance of the shoring is within established guidelines, shoring design engineer may permit the periodic readings to be bi-weekly. Once initiated, bi-weekly readings shall continue until the building slab at ground floor level is completed and capable of transmitting lateral loads to the permanent structure. Thereafter, readings can be monthly.~~

~~d. Where the building has been designed to resist lateral earth pressures, the periodic monitoring of the soldier piles and adjacent structure can be discontinued once the ground floor diaphragm and subterranean portion of the structure is capable of resisting lateral soil loads and approved by the shoring design engineer, geotechnical engineer and building official.~~

~~e. Additional readings shall be taken when requested by the special inspector, shoring design engineer, geotechnical engineer or building official.~~

~~8. Monitoring reading shall be submitted to the shoring design engineer, engineer in responsible charge, and the building official within three working days after~~

~~they are conducted. Monitoring readings shall be accurate to within 0.01 feet. Results are to be submitted in tabular form showing at least the intial date of monitoring and reading, current monitoring date and reading and difference between the two readings.~~

~~9. If the total cummulative horizontal or vertical movement (from start of construction) of the existing buildings reaches 1/2 inch or soldier piles reaches 1 inch all excavation activities shall be suspended. The geotechnical and shoring design engineer shall determine the cause of movement, if any, and recommend corrective measures, if necessary, before excavation continues.~~

~~10. If the total cummulative horizontal or vertical movement (from start of construction) of the existing buildings reaches 3/4 inch or soldier piles reaches 11/2 inches all excavation activities shall be suspended until the causes, if any, can be determined. Supplemental shoring shall be devised to eliminate further movement and the building official shall review and approve the supplemental shoring before excavation continues.~~

~~11. Monitoring of tie-back anchor loads:~~

~~a. Load cells shall be installed at the tie-back heads adjacent to buildings at maximum interval of 50 feet, with a minimum of one load cells per wall.~~

~~b. Load cell readings shall be taken once a day during excavation and once a week during the remainder of construction.~~

~~c. Load cell readings shall be submitted to the geotechnical engineer, shoring design engineer, engineer in responsible charge and the building official.~~

~~d. Load cell readings can be terminated once the temporary shoring no longer provides support for the buildings.~~

~~**J106.2.7 Monitoring of existing OSHPD 1 and 4 structures.**~~

~~1. The contractor shall complete a written and photographic log of all existing OSHPD 1 and 4 structures within 100 feet or three times depth of shoring, prior to construction. A licensed surveyor shall document all existing substantial cracks in adjacent existing structures.~~

~~2. Contractor shall document existing condition of wall cracks adjacent to shoring walls prior to start of construction.~~

~~3. Contractor shall monitor existing walls for movement or cracking that may result from adjacent shoring.~~

~~4. If excessive movement or visible cracking occurs, contractor shall stop work and shore/reinforce excavation and contact shoring design engineer and the building official.~~

~~5. Monitoring of the existing structure shall be at reasonable intervals as required by the registered design professional subject to approval of the building official. Monitoring shall be performed by a licensed surveyor and shall consist of vertical and lateral movement of the existing structures. Prior to starting shoring installation a preconstruction meeting shall take place between the contractor, shoring design engineer, surveyor, geotechnical engineer and the building official to identify monitoring locations on existing buildings.~~

~~6. If in the opinion of the building official or shoring design engineer, monitoring data indicate excessive movement or other distress, all excavation shall cease until the geotechnical engineer and shoring design engineer investigates the situation and makes recommendations for remediation or continuing.~~

~~7. All reading and measurements shall be submitted to the building official and shoring design engineer.~~

~~**J106.2.8 Tolerances.** Following tolerances shall be specified on the construction documents.~~

~~1. Soldier piles:~~

~~i. Horizontal and vertical construction tolerances for the soldier pile locations.~~

~~ii. Soldier pile plumbness requirements (angle with vertical line).~~

~~2. Tie-back anchors:~~

~~i. Allowable deviation of anchor projected angle from specified vertical and horizontal design projected angle.~~

~~ii. Anchor clearance to the existing/new utilities and structures.~~

SECTION 101. Section J107 is hereby amended to read as follows:

J107 FILLS

J107.1 General. Unless otherwise recommended in the geotechnical report, fills shall comply with the provisions of this ~~s~~Section.

EXCEPTION: The Building Official may permit a deviation from the provisions of this Chapter for minor fills not intended to support structures, where no soils engineering report has been prepared.

J107.2 ~~**Surface**~~ **Preparation of ground.** Fill slopes shall not be constructed on natural slopes steeper than 2 units horizontal to 1 unit vertical (50 percent slope). The ground surface shall be prepared to receive fill by removing vegetation, topsoil and other unsuitable materials (including any existing fill that does not meet the requirements of this chapter), and scarifying the ground to provide a bond with the fill material.

Subdrains shall be provided under all fills placed in natural drainage courses and in other locations where seepage is evident, except where the Geotechnical Engineer or Engineering Geologist recommends otherwise. Such sub-drainage systems shall be of a material and design approved by the Geotechnical Engineer and acceptable to the Building Official. The Geotechnical Engineer shall provide continuous inspection during the process of subdrain installations. The location of the subdrains shall be shown on a plan prepared by the Soils Engineer. Excavations for the subdrains shall be inspected by the Engineering Geologist when such subdrains are included in the recommendations of the Engineering Geologist.

J107.3 **Benching.** Where existing grade is at a slope steeper than 5 units horizontal to one unit vertical (20-percent) and the depth of the fill exceeds 5 feet (1,524 mm) benching shall be provided into sound bedrock or other competent material as determined by the Geotechnical Engineer. The ground preparation shall be in

accordance with Figure J107.3 or as determined by the Geotechnical Engineer. When fill is to be placed over a cut, Aa key shall be provided which is at least 10 feet (3,048 mm) in width and 2 feet (610 mm) in depth. The area beyond the toe of fill shall be sloped for sheet overflow or a paved drain shall be constructed thereon. The Geotechnical Engineer or Engineering Geologist or both shall inspect and approve the cut as being suitable for the foundation and placement of fill material before any fill material is placed on the excavation.

J107.4 Fill material. Fill material shall not include organic, frozen, or other deleterious materials. Unless approved by the Building Official, Nno rock or similar irreducible material greater than 12 inches (304.8mm) in any dimension shall be included in fills.

EXCEPTION: The Building Official may permit placement of larger rock when the Geotechnical Engineer properly devises and recommends a method of placement, and continuously inspects the placement and approves the fill stability. The following requirements shall also apply:

1. Prior to issuance of the grading permit, potential rock disposal areas shall be delineated on the grading plan.

2. Rock sizes greater than 12 inches (304.8 mm) in maximum dimension shall be 10 feet (3048 mm) or more below grade, measured vertically.

3. Rocks shall be placed so as to assure filling of all voids with well-graded soil.

4. The reports submitted by the Geotechnical Engineer shall acknowledge the placement of the oversized material and whether the work was performed in accordance with the engineer' s recommendations and the approved plans.

5. The location of oversized rock dispersal areas shall be shown on the as-built plan.

J107.5 Compaction. All fill material shall be compacted to a minimum of 90 percent of maximum density as determined by ASTM D 1557, Modified Proctor, in lifts not exceeding 12 inches (305mm) in depth within 40 feet (12192 mm) below finished grade and 93 percent of maximum dry density deeper than 40 feet (12192 mm) below finished grade, unless a lower relative compaction (not less than 90 percent of maximum dry density) is justified by the Geotechnical Engineer and approved by the Building Official. Where ASTM D 1557, Modified Proctor is not applicable, a test acceptable to the Building Official shall be used.

Field density shall be determined by a method acceptable to the Building Official. However, not less than ten percent of the required density tests, uniformly distributed, shall be obtained by the Sand Cone Method.

Fill slopes steeper than 2 units horizontal to 1 unit vertical (50 percent slope) shall be constructed by the placement of soil a sufficient distance beyond the proposed finish slope to allow compaction equipment to operate at the outer surface limits of the final slope surface. The excess fill is to be removed prior to completion or rough grading. Other construction procedures may be utilized when it is first shown to the

satisfaction of the Building Official that the angle of slope, construction method, and other factors will comply with the intent of this Section.

J107.6 Maximum fill slope. The slope of fill surfaces shall be no steeper than is safe for the intended use. Fill slopes steeper than two units horizontal to one unit vertical (50 percent) shall be justified by a geotechnical engineering reports ~~or engineering data~~conforming with the requirements of Section 111, containing a statement by the Soils Engineer that the site has been investigated and an opinion that a steeper fill slope will be stable and will not create a hazard to public or private property. Substantiating calculations and supporting data may be required where the Building Official determines that such information is necessary to verify the stability and safety of the proposed slope. The Building Official may require the fill slope to be constructed with a face flatter in slope than 2 units horizontal to 1 unit vertical (50 percent slope) if the Building Official finds it necessary for stability and safety of the slope.

J107.7 Slopes to receive fill. Where fill is to be placed above the top of an existing slope steeper than 3 units horizontal to 1 unit vertical (33 percent slope), the toe of the fill shall be set back from the top edge of the existing slope a minimum distance of 6 feet (1829 mm) measured horizontally or such other distance as may be specifically recommended by a Geotechnical Engineer or Engineering Geologist and approved by the Building Official.

J107.8 Inspection of fill. For engineered grading, the Geotechnical Engineer shall provide sufficient inspections during the preparation of the natural ground

and the placement and compaction of the fill to ensure that the work is performed in accordance with the conditions of plan approval and the appropriate requirements of this Chapter. In addition to the above, the Geotechnical Engineer shall provide continuous inspection during the entire fill placement and compaction of fills that will exceed a vertical height or depth of 30 feet (9144 mm) or result in a slope surface steeper than 2 units horizontal to 1 unit vertical (50 percent slope).

J107.9 Testing of fills. Sufficient tests of the fill soils shall be made to determine the density and to verify compliance of the soil properties with the design requirements. This includes soil types and shear strengths in accordance with Section J112 Referenced Standards.

SECTION 102. Figure J107.3 is hereby amended to read as follows:

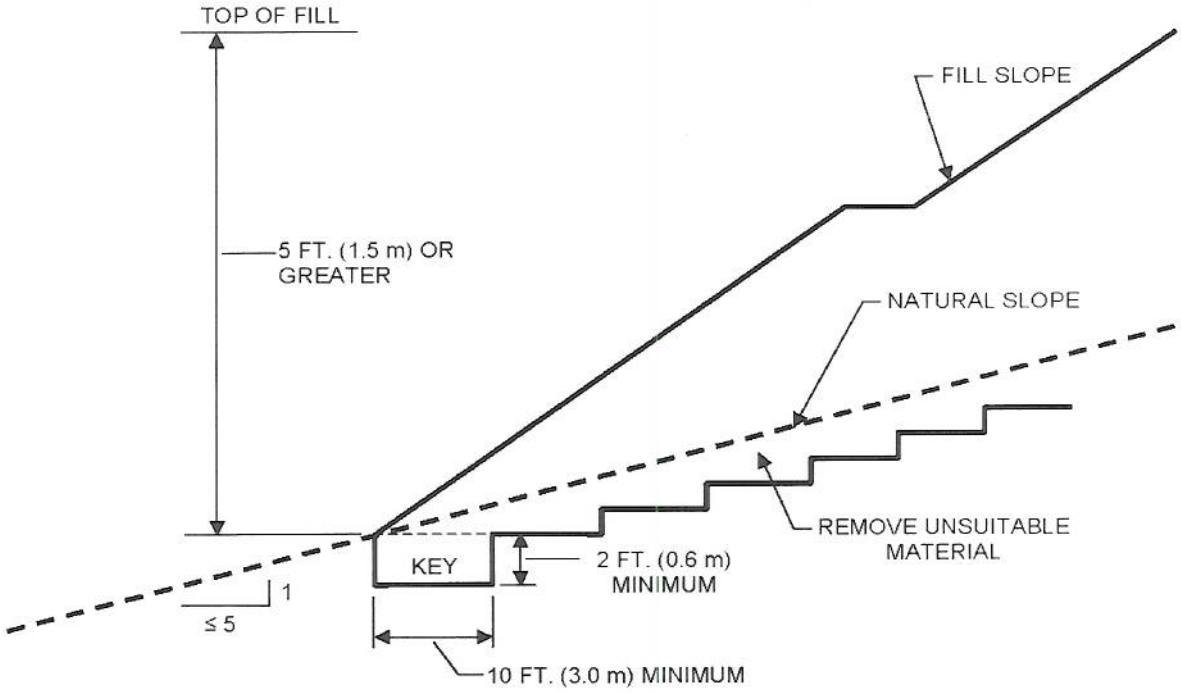

FIGURE J107.3

BENCHING DETAILS

SECTION 103. Section J108 is hereby amended to read as follows:

J108 **SETBACKS**

J108.1 **General.** Cut and fill slopes shall be set back from the property lines in accordance with this ~~s~~Section. Setback dimensions shall be horizontal distances measured perpendicular to the property line and shall be as shown in Figure J108.1, unless substantiating data is submitted justifying reduced setbacks and reduced setbacks are recommended in a geotechnical engineering and engineering geology report approved by the Building Official.

J108.2 **Top of slope.** The setback at the top of a cut slope shall not be less than that shown in Figure J108.1, or than is required to accommodate any required interceptor drains, whichever is greater. For graded slopes the property line between adjacent lots shall be at the apex of the berm at the top of the slope. Property lines between adjacent lots shall not be located on a graded slope steeper than 5 units horizontal to 1 unit vertical (20 percent slope).

J108.3 **~~Slope protection~~Toe of fill slope.** The setback from the toe of a fill slope shall not be less than that shown by figure J108.1. Where required to protect adjacent properties at the toe of a slope from adverse effects of the grading, additional protection, approved by the ~~b~~Building ~~o~~Official, shall be included. Such protection may include but shall not be limited to:

1. Setbacks greater than those required by Figure J108.1.
2. Provisions for retaining walls or similar construction.

3. Erosion protection of the fill slopes.

4. Provision for the control of surface waters.

J108.4 Alternate setbacks. The Building Official may approve alternate setbacks if he or she determines that no hazard to life or property will be created or increased. The Building Official may require an investigation and recommendation by a qualified engineer or Engineering Geologist to justify any proposed alternate setback.

SECTION 104. Figure J108.1 is hereby amended to read as follows:

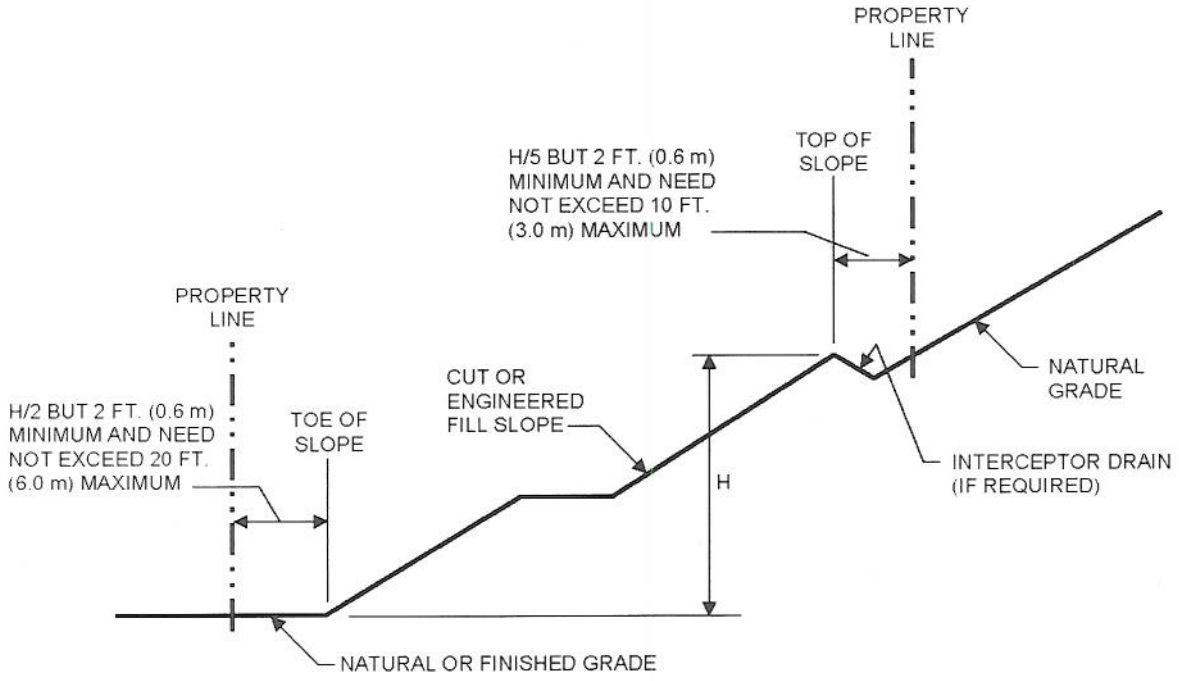

FIGURE J108.1
~~DRAINAGE~~SETBACK DIMENSIONS

SECTION 105. Section J109 is hereby amended to read as follows:

J109 DRAINAGE AND TERRACING

J109.1 General. Unless otherwise recommended by a ~~registered design professional~~Civil Engineer and approved by the Building Official, drainage facilities and terracing shall be provided in accordance with the requirements of ~~this s~~Section J109.2 for all cut and fill slopes steeper than 3 units horizontal to 1 unit vertical (33 percent slope).

~~**EXCEPTION:** Drainage facilities and terracing need not be provided where the ground slope is not steeper than 3 horizontal to 1 vertical (33 percent).~~

For slopes flatter than 3 units horizontal to 1 unit vertical (33 percent slope) and steeper than 5 units horizontal to 1 unit vertical (20 percent slope) a paved swale or ditch shall be installed at 30 foot (9144 mm) vertical intervals to control surface drainage and debris. Swales shall be sized based on contributory area and have adequate capacity to convey intercepted waters to the point of disposal as defined in Section J109.5. Swales must be paved with reinforced concrete not less than 3 inches (76.2 mm) in thickness, reinforced with 6-inch (152.4 mm) by 6-inch (152.4 mm) No. 10 by No. 10 welded wire fabric or equivalent reinforcing centered in the concrete slab or an equivalent approved by the Building Official. Swales must have a minimum flow line depth of 1-foot (304.8 mm) and a minimum paved width of 18 inches (457.2 mm). Swales shall have a minimum gradient of not less than 5 percent. There shall be no reduction in grade along the direction of flow unless the velocity of flow is such that slope debris will remain in suspension on the reduced grade.

J109.2 **Drainage ~~T~~terraces.** ~~Terraces at least 6 feet (1829 mm) in width shall be established at not more than 30-foot (9144 mm) vertical intervals on all cut or fill slopes to control surface drainage and debris. Suitable access shall be provided to allow for cleaning and maintenance.~~

~~Where more than two terraces are required, one terrace, located at approximately mid-height, shall be at least 12 feet (3658 mm) in width.~~

~~Swales or ditches shall be provided on terraces. They shall have a minimum gradient of 20 horizontal to 1 vertical (5 percent) and shall be paved with concrete not less than 3 inches (76 mm) in thickness, or with other materials suitable to the application. They shall have a minimum depth of 12 inches (305 mm) and a minimum width of 5 feet (1524 mm).~~

~~A single run of swale or ditch shall not collect runoff from a tributary area exceeding 13,500 square feet (1256 m2) (projected) without discharging into a down drain.~~Drainage terraces at least 8 feet (2438 mm) in width shall be established at not more than 30-foot (9144 mm) vertical intervals on all cut or fill slopes to control surface drainage and debris. When only one terrace is required, it shall be at midheight. For cut or fill slopes greater than 100 feet (30480 mm) and up to 120 feet (36576 mm) in vertical height, one terrace at approximately midheight shall be 20 feet (6096 mm) in width. Terrace widths and spacing for cut and fill slopes greater than 120 feet (36,576 mm) in height shall be designed by the Civil Engineer and approved by the Building Official. Suitable access shall be provided to permit proper cleaning and maintenance.

Drainage swales on terraces shall have a longitudinal grade of not less than 5 percent nor more than 12 percent and a minimum depth of 1-foot (305 mm) at the flow line. There shall be no reduction in grade along the direction of flow unless the velocity of flow is such that slope debris will remain in suspension on the reduced grade. Drainage swales must be paved with reinforced concrete not less than 3 inches (77 mm) in thickness, reinforced with 6-inch (153 mm) by 6-inch (153 mm) No. 10 by No. 10 welded wire fabric or equivalent reinforcing centered in the concrete slab or an approved equal paving. Drainage swales shall have a minimum depth at the deepest point of 1 foot (305 mm) and a minimum paved width of 5 feet (1524 mm). Drainage terraces exceeding 8 feet (2439 mm) in width need only be so paved for a width of 8 feet (2439 mm) provided such pavement provides a paved swale at least 1 foot (305 mm) in depth. Downdrains or drainage outlets shall be provided at approximately 300-foot (91440 mm) intervals along the drainage terrace or at equivalent locations. Downdrains and drainage outlets shall be of approved materials and of adequate capacity to convey the intercepted waters to the point of disposal as defined in Section J109.5.

J109.3 Interceptor drains and overflow protection. Berms, interceptor drains, swales, or other devices shall be provided at the top of cut or fill slopes to prevent surface waters from overflowing onto and damaging the face of a slope. Berms used for slope protection shall not be less than 12 inches (305 mm) above the level of the pad and shall slope back at least 4 feet (1220 mm) from the top of the slope.

Interceptor drains shall be installed along the top of ~~cut~~graded slopes greater than 5 feet in height receiving drainage from a slope with a tributary width greater than ~~40 feet (12 192 mm)~~30 feet (9144 mm), measured horizontally. They shall have a minimum depth of 1 foot (305 mm) and a minimum width of 3 feet (915 mm). The slope shall be approved by the ~~b~~Building ~~o~~Official, but shall not be less than 50 units horizontal to 1 unit vertical (2 percent). The drain shall be paved with concrete not less than 3 inches (76mm) in thickness, or by other materials suitable to the application and reinforced as required for drainage terraces. Discharge from the drain shall be accomplished in a manner to prevent erosion and shall be approved by the ~~b~~Building ~~o~~Official.

. . .

J109.5 Disposal. All drainage facilities shall be designed to convey waters to the nearest practicable street, storm drain, or natural watercourse or drainage way approved by the Building Official or other appropriate governmental agency provided that the discharge of such waters at that location will not create or increase a hazard to life or property. Erosion of the ground in the area of discharge shall be prevented by installation of non-erosive down drains or other devices. Desilting basins, filter barriers, or other methods, as approved by the Building Official, shall be utilized to remove sediments from surface waters before such waters are allowed to enter streets, storm drains, or natural watercourses. If the drainage device discharges onto natural ground, riprap, or a similar energy dissipator may be required.

Building pads shall have a minimum drainage gradient of 2 percent toward an approved drainage facility or a public street unless otherwise directed by the Building Official. A lesser slope may be approved by the Building Official for sites graded in relatively flat terrain, or where special drainage provisions are made, when the Building Official finds such modification will not result in a hazard to life or property.

SECTION 106. Section J110 is hereby amended to read as follows:

J110 **SLOPE PLANTING AND EROSION CONTROL**

J110.1 **General.** The faces of cut and fill slopes shall be prepared and maintained to control erosion. This control shall ~~be permitted to~~ consist of effective planting, erosion control blankets, soil stabilizers, or other means as approved by the Building Official.

EXCEPTION: Erosion control measures need not be provided on cut slopes not subject to erosion due to the erosion-resistant character of the materials as approved by the Project Consultants, to the satisfaction of the Building Official.

. . .

J110.3 **Planting.** The surface of all cut slopes more than 5 feet (1524 mm) in height and fill slopes more than 3 feet (915 mm) in height shall be protected against damage from erosion by planting with grass or ground cover plants. Slopes exceeding 15 feet (4572 mm) in vertical height shall also be planted with shrubs, spaced at not to exceed 10 feet (3048 mm) on centers, or trees, spaced at not to exceed 20 feet (6096 mm) on centers; or a combination of shrubs and trees at an equivalent spacing, in addition to the grass or ground cover plants. The plants selected

and planting methods used shall be suitable for the soil and climatic conditions of the site.

Plant material shall be selected which will produce a coverage of permanent planting to effectively control erosion. Consideration shall be given to deep-rooted plant material needing limited watering, maintenance, high root to shoot ratio, wind susceptibility, and fire-retardant characteristics. All plant materials must be approved by the Building Official.

Planting may be modified for the site if specific recommendations are provided by both the Geotechnical Engineer and a Landscape Architect. Specific recommendations must consider soils and climatic conditions, irrigation requirements, planting methods, fire-retardant characteristics, water efficiency, maintenance needs, and other regulatory requirements. Recommendations must include a finding that the alternative planting will provide a permanent and effective method of erosion control. Modifications to planting must be approved by the Building Official prior to installation.

J110.4 Irrigation. Slopes required to be planted by Section J110.3 shall be provided with an approved system of irrigation that is designed to cover all portions of the slope. Irrigation system plans shall be submitted to and approved by the Building Official prior to installation. A functional test of the system may be required.

For slopes less than 20 feet (6096 mm) in vertical height, hose bibs to permit hand watering will be acceptable if such hose bibs are installed at conveniently accessible locations where a hose no longer than 50 feet (15240 mm) is necessary for irrigation.

Irrigation requirements may be modified for the site if specific recommendations are provided by both the Geotechnical Engineer and a Landscape Architect. Specific recommendations must consider soils and climatic conditions, plant types, planting methods, fire-retardant characteristics, water efficiency, maintenance needs, and other regulatory requirements. Recommendations must include a finding that the alternative irrigation method will sustain the proposed planting and provide a permanent and effective method of erosion control. Modifications for irrigation systems must be approved by the Building Official prior to installation.

J110.5 Plans and specifications. Planting and irrigation plans shall be submitted for slopes required to be planted and irrigated pursuant to Sections J110.3 and J110.4. Except as otherwise required by the Building Official for minor grading, the plans for slopes 20 feet (6096 mm) or more in vertical height shall be prepared and signed by a Civil Engineer or landscape architect. If requested by the Building Official, planting and irrigation details shall be included on the grading plan.

J110.6 Rodent control. Fill slopes shall be protected from potential slope damage by a preventative program of rodent control.

J110.7 Release of security. The planting and irrigation systems required by this Section shall be installed as soon as practical after rough grading. Prior to final approval of grading and before the release of the grading security, the planting shall be well established and growing on the slopes and there shall be evidence of an effective rodent control program.

J110.8 National Pollutant Discharge Elimination System (NPDES) compliance.

J110.8.1 General. All grading plans and permits and the owner of any property on which such grading is performed shall comply with the provisions of this Section for NPDES compliance.

All best management practices shall be installed before grading begins or as instructed in writing by the Building Official for unpermitted grading as defined by Section J103.3. As grading progresses, all best management practices shall be updated as necessary to prevent erosion and to control construction-related pollutants from discharging from the site. All best management practices shall be maintained in good working order to the satisfaction of the Building Official until final grading approval has been granted by the Building Official and all permanent drainage and erosion control systems, if required, are in place. Failure to comply with this Section is subject to "Noncompliance Penalties" pursuant to Section J110.8.5. Payment of a penalty shall not relieve any persons from fully complying with the requirements of this Code in the execution of the work.

J110.8.2 Storm Water Pollution Prevention Plan (SWPPP). The Building Official may require a SWPPP. The SWPPP shall contain details of best management practices, including desilting basins or other temporary drainage or control measures, or both, as may be necessary to control construction-related pollutants which originate from the site as a result of construction-related activities. When the Building

Official requires a SWPPP, no grading permit shall be issued until the SWPPP has been submitted to and approved by the Building Official.

For unpermitted grading as defined by Section J103.3 upon written request a SWPPP in compliance with the provisions of this Section and Section 106.4.3 for NPDES compliance shall be submitted to the Building Official. Failure to comply with this Section is subject to "Noncompliance Penalties" per Section J110.8.5. Payment of a penalty shall not relieve any persons from fully complying with the requirements of this Code in the execution of the work.

J110.8.3 Wet Weather Erosion Control Plans (WWECP). Where a grading permit is issued and the Building Official determines that the grading will not be completed prior to November 1, the owner of the site on which the grading is being performed shall, on or before October 1, file or cause to be filed with the Building Official a WWECP. The WWECP shall include specific best management practices to minimize the transport of sediment and protect public and private property from the effects of erosion, flooding, or the deposition of mud, debris, or construction-related pollutants. The best management practices shown on the WWECP shall be installed on or before October 15. The plans shall be revised annually or as required by the Building Official to reflect the current site conditions.

The WWECP shall be accompanied by an application for plan checking services and plan-checking fees in an amount determined by the Building Official, up to but not exceeding 10 percent of the original grading permit fee.

Failure to comply with this Section is subject to "Noncompliance Penalties" pursuant to Section J110.8.5. Payment of a penalty shall not relieve any persons from fully complying with the requirements of this Code in the execution of the work.

J110.8.4 Storm Water Pollution Prevention Plan (SWPPP), effect of noncompliance. Should the owner fail to submit the SWPPP or the WWECP as required by Section J110.8 or fails to install the best management practices, it shall be deemed that a default has occurred under the conditions of the grading permit security. The Building Official may thereafter enter the property for the purpose of installing, by County forces or by other means, the drainage, erosion control, and other devices shown on the approved plans, or if there are no approved plans, as the Building Official may deem necessary to protect adjoining property from the effects of erosion, flooding, or the deposition of mud, debris, or constructed-related pollutants.

The Building Official shall also have the authority to impose and collect the penalties imposed by Section J110.8.5. Payment of a penalty shall not relieve any persons from fully complying with the requirements of this Code in the execution of the work.

J110.8.5 Noncompliance penalties. The amount of the penalties shall be as follows:

1. If a SWPPP or a WWECP is not submitted as prescribed in Sections J110.8.2 and J110.8.3:

Grading Permit Volume	Penalty
1-10,000 cubic yards (1-7645.5 m^3)	$50.00 per day
10,001-100,000 cubic yards (7646.3-76455 m^3)	$250.00 per day
More than 100,000 cubic yards (76455 m^3)	$500.00 per day

2. If the best management practices for storm water pollution prevention and wet weather erosion control, as approved by the Building Official, are not installed as prescribed in this Section J110.8:

Grading Permit Volume	Penalty
1-10,000 cubic yards (1-7645.5 m^3)	$100.00 per day
10,001-100,000 cubic yards (7646.3-76455 m^3)	$250.00 per day
More than 100,000 cubic yards (76455 m^3)	$500.00 per day

NOTE: See Section 108 for inspection request requirements.

SECTION 107. Section J111 is hereby amended to read as follows:

J111 REFERENCED STANDARDS

~~ASTM D 1557-e01 Test Method for Laboratory Compaction Characteristics of Soil Using Modified Effort [56,000 ft-lb/ft3 (2,700kN-mlm3)]. J 107.6~~

These regulations establish minimum standards and are not intended to prevent the use of alternate materials, methods, or means of conforming to such standards, provided such alternate has been approved.

The Building Official shall approve such an alternate provided he or she determines that the alternate is, for the purpose intended, at least the equivalent of that prescribed in this Code in quality, strength, effectiveness, durability, and safety.

The Building Official shall require that sufficient evidence or proof be submitted to substantiate any claims regarding the alternate.

The standards listed below are recognized standards. Compliance with these recognized standards shall be prima facie evidence of compliance with the standards set forth in Section J107.

ASTM D 1557	Laboratory Characteristics Compaction of Soil Using Modified Effort
ASTM D 1556	Density and Unit Weight of Soils In Place by the Sand Cone Method
ASTM D 2167	Density and Unit Weight of Soils In Place by the Rubber-Balloon Method
ASTM D 2937	Density of Soils in Place by the Drive-Cylinder Method
ASTM D 2922	Density of Soil and Soil Aggregate In Place by Nuclear Methods
ASTM D 3017	Water Content of Soil and Rock in Place by Nuclear Methods

SECTION 108. The provisions of this ordinance contain various changes, modifications, and additions to the 2010 California Building Code. Some of those changes are administrative in nature in that they do not constitute changes or

modifications to requirements contained in the building standards published in the California Building Standard Code.

Pursuant to California Health and Safety Code sections 17958.5, 17958.7, and 18941.5, the Board of Supervisors hereby expressly finds that all of the changes and modifications to requirements contained in the building standards published in the California Building Standards Code, contained in this ordinance, which are not administrative in nature, are reasonably necessary because of local climatic, geological, or topographical conditions in the County of Los Angeles as more particularly described in the table set forth below.

BUILDING CODE AMENDMENTS

Code Section	Condition	Explanation of Amendment
701A.1	Climatic	Clarifies the application of Chapter 7A to include additions, alterations, and/or relocated buildings. Many areas of the County have been designated as Fire Hazard Severity Zones due to low humidity, strong winds, and dry vegetation. Additions, alterations, and/or relocated buildings have the same fire risk as new buildings.
701A.3	Climatic	Clarifies the application of Chapter 7 A to include additions, alterations, and/or relocated buildings. Many areas of the County have been designated as Fire Hazard Severity Zones due to the increased risk of fire caused by low humidity, strong winds, and dry vegetation. Additions, alterations, and/or relocated buildings have the same fire risk as new buildings.
701A.3.1	Climatic	Clarifies the application of Chapter 7 A to include additions, alterations, and/or relocated buildings. Many areas of the County have been designated as Fire Hazard Severity Zones due to the increased risk of fire caused by low humidity, strong winds, and dry vegetation. Additions, alterations, and/or relocated buildings have the same fire risk as new buildings.
703A.5.2 & 703A.5.2.2	Climatic	Disallows the use of wood-shingle/wood-shake roofs due to the increased risk of fire in the County caused by low humidity, strong winds, and dry vegetation.
704A.3	Climatic	Disallows the use of wood-shingle/wood-shake roofs due to the increased risk of fire in the County caused by low humidity, strong winds, and dry vegetation in high fire severity zones.
705A.2	Climatic	Disallows the use of wood-shingle/wood-shake roofs and requires the use of Class A roof covering due to the increased risk of fire in the County caused by low humidity, strong winds, and dry vegetation in high fire severity zones.
1029.4	Geological	The greater Los Angeles/Long Beach region is a densely populated area having buildings constructed over and near a vast array of earthquake fault systems capable of producing major earthquakes, including but not limited to the recent

Code Section	Condition	Explanation of Amendment
		1994 Northridge Earthquake. The proposed amendment is intended to prevent occupants from being trapped in a building and to allow rescue workers to easily enter after an earthquake.
1207.1, 1207.11, 1207.12	Climatic and Topographic	Sound Transmission – "Soundproofing" buildings adjacent to Airport (LAX). The purpose of this section is to establish uniform minimum noise insulation performance standards to protect persons from the effects of excessive noise (sound), hearing loss or impairment, and interference with speech and sleep. The amendment requires other types of buildings, such as, long-term care facilities, single-family dwellings, private schools, and places of worship to be "soundproofed." Based on the local topographic conditions in the Los Angeles Basin, which includes the surrounding hills and mountains, such as the Santa Monica Mountains, and the climatic conditions of local wind blowing off shore, such as the Santa Ana winds, many planes are required to land and take off near the airports (LAX) to fly over areas where there are buildings including single family home, long-term care facilities, private schools and places of worship and other residential buildings, apartment houses, hotels, etc. The noise from these planes creates a hardship for the citizens, therefore, requiring the buildings to be "soundproofed."
1403.3	Climatic Geological	Section amended to limit the deflection of lateral support of veneer and prohibit its usage as part of the structural design strength of walls, due to the increased risk of significant earthquakes in the County. The Structural Engineers Association of Southern California (SEAOSC) and LA City Post Northridge Earthquake committee discovered significant loss of veneer from buildings due to inadequate design and construction. As deflection limitation in out-of-plane directions is not covered in this Code, this amendment will prevent loosening and spalling of veneer in a significant earthquake.
1405.7 through 1405.7.2	Geological	Section amended to require proper anchorage of masonry or stone veneer, due to the increased risk of significant earthquakes in the County. Investigations following the Northridge earthquake discovered numerous cases where veneer pulled away from wood stud framing. Most of it was due to corrosion and weakness in the anchor ties and mesh connections to the framing. Where sheathing was beneath the veneer, nail attachments were often not attached to the wall framing below. SEAOSC/LA City Post Northridge Earthquake committee findings indicated significant loss of veneer from buildings due to inadequate design and construction. Therefore, additional reinforcement for heavy veneer, stone and masonry veneer is needed to minimize such occurrences in the event of future significant earthquakes.
1507.3.1	Geological	Section amended to require concrete and clay tiles to be installed over solid structural sheathing boards only, due to the increased risk of significant earthquakes in the County. The changes in Section 1507.3.1 are needed because there were numerous observations of tile roofs pulling away from wood framed buildings following the 1994 Northridge Earthquake. Where sheathing beneath the tile roofs was not nailed adequately or the nails were not attached on each side of each tile or the nail just pulled out over a period of time because the shank of the nails were smooth. Northridge SEAOSC/LA City Post Northridge Earthquake committee findings indicated significant problems with tile roof due to inadequate design and/or construction. Therefore, the amendment is needed to needed to minimize such occurrences in the event of future significant earthquakes.
Table 1507.3.7	Geological	Table amended to require proper anchorage for clay or concrete tiles from sliding or rotating due to the increased risk of significant earthquakes in the County. Design provisions developed based on detailed study of the 1994 Northridge and the 1971

Code Section	Condition	Explanation of Amendment
		Sylmar earthquakes need to be incorporated into the local building code.
1613.6.7	Geological	The inclusion of the importance factor in this equation has the unintended consequence of reducing the minimum seismic separation distance for important facilities such as hospital, school, police, and fire station, etc., from adjoining structures. The deletion of the importance factor from Equation 16-44 will ensure that a safe seismic separation distance is provided. This amendment is a continuation of an amendment adopted during previous code adoption cycles, and is necessary due to the increased risk of significant earthquakes in the County.
1613.8 through 1613.8.1	Geological	The steel Buckling Restrained Braced Frame (BRBF) system was first approved for use in the 2003 NEHRP Provisions. The values for the approximate period perimeters C_t and x were also approved as part of that original BSSC Proposal 6-6R (2003). It was an oversight that these parameters were not carried forward into the 2005 Edition of the ASCE 7. Currently, these two factors can be found in Appendix R of AISC 341-05. There, they function only as a placeholder that will be removed in the next version upon approval by ASCE 7 Task Committee on Seismic. This amendment is a continuation of an amendment adopted during previous code adoption cycles, and is necessary due to the increased risk of significant earthquakes in the County.
1613.8.2	Geological	Observed damages to one- and two-family dwellings of light frame construction after the Northridge Earthquake may have been partially attributed to vertical irregularities common to this type of occupancy and construction. In an effort to improve quality of construction and incorporate lessons learned from studies after the Northridge Earthquake, the modification to ASCE 7-05 Section 12.2.3.1 by limiting the number of stories and height of the structure to two stories will significantly minimize the impact of vertical irregularities and concentration of inelastic behavior from mixed structural systems. This amendment is a continuation of an amendment adopted during previous code adoption cycles, and is necessary due to the increased risk of significant earthquakes in the County.
1613.8.3	Geological	The importance factor, I, was dropped from equation 12.8-16 by mistake while transcribing it from NEHRP Recommended Provisions (2003) equation 5.2-16. For buildings with importance factor, I, higher than 1.0, stability coefficient should include the importance factor. The modification is consistent with the provisions adopted by OSPHD and DSA-SS as reflected in Section 1615.10.7 of the 2010 California Building Code. SEAOSC Steel Committee had supported the proposed modification during the 2007 code adoption process. This amendment is a continuation of an amendment adopted during previous code adoption cycles, and is necessary due to the increased risk of significant earthquakes in the County.

Code Section	Condition	Explanation of Amendment
1613.8.4	Geological	A joint Structural Engineers Association of Southern California (SEAOSC), Los Angeles County, and Los Angeles City Task Force investigated the performance of concrete and masonry construction with flexible wood diaphragm failures after the Northridge earthquake. It was concluded at that time that continuous ties are needed at specified spacing to control cross grain tension in the interior of the diaphragm. Additionally, subdiaphragm shears need to be limited to control combined orthogonal stresses within the diaphragm. Recognizing the importance and need to continue the recommendation made by the task force, but also taking into consideration the improved performance and standards for diaphragm construction today, a proposal to increase the continuous tie spacing limit to 40 ft in lieu of 25 ft and to use 75 percent of the allowable code diaphragm shear to determine the depth of the sub-diaphragm in lieu of the 300 plf is deemed appropriate and acceptable. The Los Angeles region is within a very active geological location. The various jurisdictions within this region have taken additional steps to prevent roof or floor diaphragms from pulling away from concrete or masonry walls. This decision was made due to the frequency of this type of failure during the past significant earthquakes. This amendment is a continuation of an amendment adopted during previous code adoption cycles.
1613.9 through 1613.9.10.5	Geological Topographical	Section is added to improve seismic safety of buildings constructed on or into hillsides. Due to the local topographical and geological conditions of the sites within the Los Angeles region and their probabilities for earthquakes, this technical amendment is required to address and clarify special needs for buildings constructed on hillside locations. A joint Structural Engineers Association of Southern California (SEAOSC) and both the Los Angeles County and Los Angeles City Task Force investigated the performance of hillside building failures after the Northridge earthquake. Numerous hillside failures resulted in loss of life and millions of dollars in damage. These criteria were developed to minimize the damage to these structures and have been in use by both the City and County of Los Angeles for several years with much success. This amendment is a continuation of an amendment adopted during previous code adoption cycles.
1704.1	Geological Topographical	Section amended to remove the exemption of Group U from special inspection requirements. One of the significant problems discovered from the studies after the Northridge Earthquake was the extent of poor quality in construction, especially for residential wood frame accessory structures. The provisions to require that special inspectors be provided for work listed under Section 1704 to observe the actual construction will ensure that acceptable standards of workmanship are provided.
1704.4	Geological	Results from studies after the 1994 Northridge Earthquake indicated that a significant portion of the damages were attributable to lack of quality control during construction resulting in poor performance of the building or structure. Therefore, the amendment restricts the exceptions to the requirement for special inspection. This amendment is a continuation of an amendment adopted during previous code adoption cycles, and is necessary due to the increased risk of significant earthquakes in the County.

Code Section	Condition	Explanation of Amendment
1704.8	Geological	Studies after the Northridge Earthquake revealed that great confusion exists in the field over what is required by the Code in the way of special inspection beyond just piles and caissons. Connecting grade beams used in driven deep foundations will generally act like concrete beams and should not be treated like typical footings. Section 1704.4 requires concrete beams to have special inspection, but exempts the footings of buildings three stories or less in height. This amendment clarifies that the grade beams that connect driven deep foundations are not exempt from special inspection even if they are used as part of the foundation system. They are an essential part of the driven deep foundation system and should receive the same level of inspection, particularly since this type of system must resist the higher demand of seismic loads in this region. The amendment is necessary due to the increased risk of significant earthquakes in the County.
1704.9	Geological	Studies after the Northridge Earthquake revealed that great confusion exists in the field over what is required by the Code in the way of special inspection beyond just piles and caissons. Connecting grade beams used in cast-in-place deep foundations will generally act like concrete beams and should not be treated like typical footings. Section 1704.4 requires concrete beams to have special inspection, but exempts the footings of buildings three stories or less in height. This amendment clarifies that the grade beams that connect cast-in-place deep foundations are not exempt from special inspection even if they are used as part of the foundation system. They are an essential part of the cast-in-place deep foundation system and should receive the same level of inspection, particularly since this type of system must resist the higher demand of seismic loads in this region. The amendment is necessary due to the increased risk of significant earthquakes in the County.
1705.3	Geological	In Southern California, very few detached one- or two-family dwellings not exceeding two stories above grade plane are built as "box-type" structures, specially for those in hillside areas and near the oceanfront. Many with steel moment frames or braced frames, and or cantilevered columns can still be shown as "regular" structures by calculations. With the higher seismic demand placed on buildings and structures in this region, the language in Sections 1705.3 Item 3 of the California Building Code would permit many detached one- or two-family dwellings not exceeding two stories above grade plane with complex structural elements to be constructed without the benefit of special inspections. By requiring special inspections, the quality of major structural elements and connections that affect the vertical and lateral load resisting systems of the structure will greatly be increased. The exception should only be allowed for detached one- or two-family dwellings not exceeding two stories above grade plane assigned to Seismic Design category A, B, and C.
1710.1	Geological	The language in Sections 1710.1 of the California Building Code permits the owner to employ any registered design professional to perform structural observations with minimum guidelines. However, it is important to recognize that the registered design professional responsible for the structural design has thorough knowledge of the building he/she designed. By requiring the registered design professional responsible for the structural design or their designee who were involved with the design to observe the construction, the quality of the observation for major structural elements and connections that affect the vertical and lateral load resisting systems of the structure will greatly be increased. Additional requirements are provided to help clarify the role and duties of the structural observer and the method of reporting and correcting observed deficiencies to the building official. This

Code Section	Condition	Explanation of Amendment
		amendment is a continuation of an amendment adopted during previous code adoption cycles, and is necessary due to the increased risk of significant earthquakes in the County.
1710.2	Geological	With the higher seismic demand placed on buildings and structures in this region, the language in Sections 1710.2 Item 3 of the California Building Code would permit many low-rise buildings and structures with complex structural elements to be constructed without the benefit of a structural observation. By requiring a registered design professional to observe the construction, the quality of the observation for major structural elements and connections that affect the vertical and lateral load resisting systems of the structure will greatly be increased. An exception is provided to permit simple structures and buildings to be excluded. This amendment is a continuation of an amendment adopted during previous Code adoption cycles, and is necessary due to the increased risk of significant earthquakes in the County.
1807.1.4	Climatic Geological	No substantiating data has been provided to show that a wood foundation is effective in supporting buildings and structures during a seismic event while being subject to deterioration caused by the combined detrimental effect of constant moisture in the soil and wood-destroying organisms. Wood retaining walls, when they are not properly treated and protected against deterioration, have performed very poorly and have led to slope failures. Most contractors are typically accustomed to construction in dry and temperate weather in the Southern California region and are not generally familiar with the necessary precautions and treatment of wood that makes it suitable for both seismic events and wet applications. The proposed amendment takes the necessary precautionary steps to reduce or eliminate potential problems that may result by using wood foundations that experience relatively rapid decay due to the fact that the region does not experience temperatures cold enough to destroy or retard the growth and proliferation of wood-destroying organisms. This amendment is a continuation of an amendment adopted during previous Code adoption cycles, and is necessary due to the increased risk of significant earthquakes in the County.
1807.1.6	Geological	With the higher seismic demand placed on buildings and structures in this region, it is deemed necessary to take precautionary steps to reduce or eliminate potential problems that may result by following prescriptive design provisions that do not take into consideration the surrounding environment. Plain concrete performs poorly in withstanding the cyclic forces resulting from seismic events. In addition, no substantiating data has been provided to show that under-reinforced foundation walls are effective in resisting seismic loads and may potentially lead to a higher risk of failure. It is important that the benefit and expertise of a registered design professional be obtained to properly analyze the structure and take these issues into consideration. This amendment is a continuation of an amendment adopted during previous Code adoption cycles.
1809.3	Geological	With the higher seismic demand placed on buildings and structures in this region, it is deemed necessary to take precautionary steps to reduce or eliminate potential problems that may result for under-reinforced footings located on sloped surfaces. Requiring minimum reinforcement for stepped footings is intended to address the problem of poor performance of plain or under-reinforced footings during a seismic event. This amendment is a continuation of an amendment adopted during previous Code adoption cycles.

Code Section	Condition	Explanation of Amendment
1809.7 and Table 1809.7	Geological	No substantiating data has been provided to show that under-reinforced footings are effective in resisting seismic loads and may potentially lead to a higher risk of failure. Therefore, this amendment requires minimum reinforcement in continuous footings to address the problem of poor performance of plain or under-reinforced footings during a seismic event. With the higher seismic demand placed on buildings and structures in this region, it is deemed necessary to take precautionary steps to reduce or eliminate potential problems that may result by following prescriptive design provisions for footings that do not take into consideration the surrounding environment. It was important that the benefit and expertise of a registered design professional be obtained to properly analyze the structure and take these factors into consideration. This amendment reflects the recommendations by the Structural Engineers Association of Southern California (SEAOSC) and the Los Angeles City Task Force that investigated the poor performance observed in the 1994 Northridge Earthquake. This amendment is a continuation of an amendment adopted during previous code adoption cycles.
1809.12	Climatic Geological	No substantiating data has been provided to show that timber footings are effective in supporting buildings and structures during a seismic event while being subject to deterioration caused by the combined detrimental effects of constant moisture in the soil and wood-destroying organisms. Timber footings, when they are not properly treated and protected against deterioration, have performed very poorly. Most contractors are typically accustomed to construction in dry and temperate weather in the Southern California region and are not generally familiar with the necessary precautions and treatment of wood that makes it suitable for both seismic events and wet applications. The proposed amendment takes the necessary precautionary steps to reduce or eliminate potential problems that may result by using timber footings that experience relatively rapid decay due to the fact that the region does not experience temperatures cold enough to destroy or retard the growth and proliferation of wood-destroying organisms. This amendment is a continuation of an amendment adopted during previous Code adoption cycles, and is necessary due to the increased risk of significant earthquakes in the County.
1908.1 and 1908.1.11 through 1908.1.14	Geological	This amendment is intended to carry over critical provisions for the design of concrete columns in moment frames from the UBC. Increased confinement is critical to the integrity of such columns and these modifications ensure that it is provided when certain thresholds are exceeded. In addition, this amendment carries over from the UBC a critical provision for the design of concrete shear walls. It essentially limits the use of very highly gravity-loaded walls from being included in the seismic load resisting system, since their failure could have catastrophic effect on the building. Furthermore, this amendment was incorporated in the code based on observations from the 1994 Northridge Earthquake. Rebar placed in very thin concrete topping slabs has been observed in some instances to have popped out of the slab due to insufficient concrete coverage. This modification ensures that critical boundary and collector rebars are placed in sufficiently thick slabs to prevent buckling of such reinforcements. This amendment is a continuation of an amendment adopted during previous Code adoption cycles, and is necessary due to the increased risk of significant earthquakes in the County.

Code Section	Condition	Explanation of Amendment
1908.1.2	Geological	By virtue of ACI 318 Section 21.1.1.7(d), intermediate precast structural walls designed under Section 21.4, material requirements intended under provisions 21.1.4, 21.1.5, 21.1.6, and 21.1.7 would be excluded for structures assigned to Seismic Design Category D, E, or F. The amendments to ACI 318 Chapter 21 are needed to ensure that structural walls designed under ASCE 7 Table 12.2-1 using the intermediate wall panel category would conform to ductility requirements comparable to special structural walls; and conformance to the long standing practice of ACI 318 to impose special requirements for high seismic design regions. This amendment gives explicit requirements under which design and detailing need to conform to special structural wall system provisions in ACI-318 Section 21.9, which covers both cast-in-place as well as precast. This amendment further gives building officials the tools to enforce minimum life safety building performance under earthquake forces in Seismic Design Category D, E, or F. This amendment is a continuation of an amendment adopted during previous code adoption cycles, and is necessary due to the increased risk of significant earthquakes in the County.
1908.1.3	Geological	The design provision for wall pier detailing was originally introduced by SEAOC in 1987 to legacy Uniform Building Code (UBC) and was included in the 1988 UBC through the 1997 UBC (2002 CBC). The wall pier detailing provision prescribed under Section 1908.1.4 was intended for high seismic zones equivalent to current Seismic Design Category D, E, or F. Section 1908.1.3 was added as a complement of wall pier detailing in Seismic Design Category C (formerly seismic zones 2A and 2B under the legacy model code). ACI 318 Commentary R 21.1.1 emphasized "it is essential that structures assigned to higher Seismic Design Categories possess a higher degree of toughness," and further encourages practitioners to use special structural wall systems in regions of high seismic risk. ASCE 7 Table 12.2-1 permits intermediate precast structural wall system in Seismic Design Category D, E, or F. Current Section 1908.1.3 is not limited to just structures assigned to Seismic Design Category C. The required shear strength under 21.3.3, referenced in current Section 21.4.5, is based on V_u under either nominal moment strength or two times the code prescribed earthquake force. The required shear strength in 21.6.5.1, referenced in Section 21.9.10.2 (IBC 1908.1.4), is based on the probable shear strength, V_e under the probable moment strength, M_{pr}. In addition, the spacing of required shear reinforcement is 8 inches on center under current Section 21.4.5 instead of 6 inches on center with seismic hooks at both ends under Section 21.9.10.2. Requirement of wall pier under Section 21.9.10.2 would enhance better ductility. The current practice in commercial buildings constructed using precast panel wall systems is to have large window and door openings and/or narrow wall piers. Wall panels varying up to three stories high with openings resembles a wall frame which is not currently recognized under any of the defined seismic-force resisting systems other than consideration of structural wall systems. Conformance to special structural wall system design and detailing of wall piers ensures minimum life safety performance in resisting earthquake forces for structures in Seismic Design Category D, E, or F. The modification separates wall piers designed for structures assigned to Seismic Design Category C from those assigned to Seismic Design Category D, E, or F. This modification is consistent with the amendment adopted by DSA-SS as reflected in Section 1916.4.4 of the 2010 Edition of the California Building Code. This amendment is a continuation of an amendment adopted during previous code adoption cycles, and is necessary due to the increased risk of significant earthquakes in the County.

Code Section	Condition	Explanation of Amendment
1908.1.8	Geological	This amendment requires minimum reinforcement in continuous footings to address the problem of poor performance of plain or under-reinforced footings during a seismic event. This amendment reflects the recommendations by the Structural Engineers Association of Southern California (SEAOSC) and the Los Angeles City Joint Task Force that investigated the poor performance observed in 1994 Northridge Earthquake. This amendment is a continuation of an amendment adopted during previous code adoption cycles, and is necessary due to the increased risk of significant earthquakes in the County.
1909.4	Geological	With the higher seismic demand placed on buildings and structures in this region, it is deemed necessary to take precautionary steps to reduce or eliminate potential problems that may result by permitting a reduced edge thickness of the footing that support walls without taking into consideration the surrounding environment. In addition, no substantiating data has been provided to show that the reduced edge thickness is effective in resisting seismic loads and may potentially lead to a higher risk of failure. It is important that the benefit and expertise of a registered design professional be obtained to properly analyze the structure and take these issues into consideration. This amendment is a continuation of an amendment adopted during previous code adoption cycles.

Code Section	Condition	Explanation of Amendment
204.1.1	Geological	A number of significant technical modifications have been made since the adoption of AISC 341-05. One such change incorporates AWS D1.8/D1.8M by reference for welding related issues. This change will be included in AISC 341-10 which is to be incorporated by reference into the 2012 Edition of the International Building Code. This proposed amendment is consistent with actions taken by both DSA-SS and OSHPD to incorporate such language in the 2010 Edition of the California Building Code. AWS D1.8/D1.8M requires that all seismic force resisting system welds are to be made with filler metals classified using AWS A5 standards that achieve the following mechanical properties:

Mechanical Properties for Demand Critical Welds		
Property	Classification	
	70 ksi (480 MPa)	80 ksi (550 MPa)
Yield Strength, ksi (MPa)	58 (400) min.	68 (470) min.
Tensile Strength, ksi (MPa)	70 (480) min.	80 (550) min.
Elongation (%)	22 min.	19 min.
CVN Toughness, ft-lbf (J)	40 (54) min. @ 70 °F (20 °C) [b, c]	
[b] For LAST of +50 °F (+10 °C). For LAST less than + 50 °F (+10 °C), see AWS D1.8/D1.8M Clause 6.3.6. [c] Tests conducted in accordance to AWS D1.8/D1.8M Annex A meeting 40 ft-lbf (54 J) min. at a temperature lower than +70 °F (20 °C) also meet this requirement.		

In addition to the above requirements, AWS D1.8/D1.8M requires, unless otherwise exempted from testing, that all demand critical welds are to be made with filler metals receiving Heat Input Envelope Testing that achieve the following mechanical properties in the weld metal:

Filler Metal Classification Properties for Seismic Force Resisting System Welds		
Property	Classification	
	70 ksi (480 MPa)	80 ksi (550 MPa)
Yield Strength, ksi (MPa)	58 (400) min.	68 (470) min.
Tensile Strength, ksi (MPa)	70 (480) min.	80 (550) min.
Elongation, %	22 min.	19 min.
CVN Toughness, ft-lbf (J)	20 (27) min. @ 0 °F (–18 °C) [a]	
[a] Filler metals classified as meeting 20 ft-lbf (27 J) min. at a temperature lower than 0 °F (–18 °C) also meet this requirement.		

The amendment is necessary due to the increased risk of significant earthquakes in the County.

Code Section	Condition	Explanation of Amendment
2304.9.1 and Table 2304.9.1	Geological	Due to the high geologic activities in the Southern California area and the expected higher level of performance on buildings and structures, this proposed local amendment limits the use of staple fasteners in resisting or transferring seismic forces. In September 2007, limited cyclic testing data was provided to the ICC Los Angeles Chapter Structural Code Committee showing that stapled wood structural shear panels do not exhibit the same behavior as nailed wood structural shear panels. The test results of stapled wood structural shear panels appeared much lower in strength and drift than nailed wood structural shear panel test results. Therefore, the use of staples as fasteners to resist or transfer seismic forces shall not be permitted without being substantiated by cyclic testing. This amendment is a continuation of a similar amendment adopted during previous code adoption cycles, and is necessary due to the increased risk of significant earthquakes in the County.
2304.11.7	Climatic Geological	No substantiating data has been provided to show that wood used in retaining or crib walls is effective in supporting buildings and structures during a seismic event while being subject to deterioration caused by the combined detrimental effect of constant moisture in the soil and wood-destroying organisms. Wood used in retaining or crib walls, when it is not properly treated and protected against deterioration, has performed very poorly. Most contractors are typically accustomed to construction in dry and temperate weather in the Southern California region and are not generally familiar with the necessary precautions and treatment of wood that makes it suitable for both seismic events and wet applications. The proposed amendment takes the necessary precautionary steps to reduce or eliminate potential problems that may result by using wood in retaining or crib walls that experience relatively rapid decay due to the fact that the region does not experience temperatures cold enough to destroy or retard the growth and proliferation of wood-destroying organisms. This amendment is a continuation of an amendment adopted during previous code adoption cycles, and is necessary due to the increased risk of significant earthquakes in the County.
2305.4	Geological	The overdriving of nails into the structural wood panels still remains a concern when pneumatic nail guns are used for wood structural panel shear wall nailing. Box nails were observed to cause massive and multiple failures of the typical 3/8-inch thick plywood during the 1994 Northridge Earthquake. The use of clipped head nails continues to be restricted from use in wood structural panel shear walls where the minimum nail head size must be maintained in order to minimize nails from pulling through sheathing materials. Clipped or mechanically driven nails used in wood structural panel shear wall construction were found to perform much worse in previous wood structural panel shear wall testing done at the University of California Irvine. The existing test results indicated that, under cyclic loading, the wood structural panel shear walls were less energy absorbent and less ductile. The panels reached ultimate load capacity and failed at substantially less lateral deflection than those using same size hand-driven nails. This amendment reflects the recommendations by the Structural Engineers Association of Southern California (SEAOSC) and the Los Angeles City Joint Task Force that investigated the poor performance observed in 1994 Northridge Earthquake. This amendment is a continuation of an amendment adopted during previous code adoption cycles, and is necessary due to the increased risk of significant earthquakes in the County.

Code Section	Condition	Explanation of Amendment
2305.5	Geological	Many of the hold-down connectors currently in use do not have any acceptance report based on dynamic testing protocol. This amendment continues to limit the allowable capacity to 75% of the acceptance report value to provide an additional factor of safety for statically tested anchorage devices. Cyclic forces imparted on buildings and structures by seismic activity cause more damage than equivalent forces which are applied in a static manner. Steel plate washers will reduce the additional damage which can result when hold-down connectors are fastened to wood framing members. This amendment reflects the recommendations by the Structural Engineers Association of Southern California (SEAOSC) and the Los Angeles City Joint Task Force that investigated the poor performance observed in the 1994 Northridge Earthquake. This amendment is a continuation of an amendment adopted during previous code adoption cycles, and is necessary due to the increased risk of significant earthquakes in the County.
2306.2.1 and Tables 2306.2.1(3) through 2306.2.1(4)	Geological	The Structural Engineers Association of Southern California (SEAOSC) and the Los Angeles City Joint Task Force that investigated the damages to buildings and structures during the 1994 Northridge Earthquake recommended reducing allowable shear values in wood structural panel shear walls or diaphragms that were not substantiated by cyclic testing. That recommendation was consistent with a report to the Governor from the Seismic Safety Commission of the State of California recommending that code requirements be "more thoroughly substantiated with testing." The allowable shear values for wood structural panel shear walls or diaphragms fastened with staples are based on monotonic testing and do not take into consideration that earthquake forces load shear wall or diaphragm in a repeating and fully reversible manner. In September 2007, limited cyclic testing was conducted by a private engineering firm to determine if wood structural panels fastened with staples would exhibit the same behavior as wood structural panels fastened with common nails. The test result revealed that wood structural panels fastened with staples appeared to be much lower in strength and stiffness than wood structural panels fastened with common nails. It was recommended that the use of staples as fasteners for wood structural panel shear walls or diaphragms not be permitted to resist seismic forces in structures assigned to Seismic Design Category D, E and F unless it can be substantiated by cyclic testing. Furthermore, the cities and unincorporated areas within the Los Angeles region have taken extra measures to maintain the structural integrity of the framing of shear walls and diaphragms designed for high levels of seismic forces by requiring wood sheathing be applied directly over the framing members and prohibiting the use of panels placed over gypsum sheathing. This amendment is intended to prevent the undesirable performance of nails when gypsum board softens due to cyclic earthquake displacements and the nail ultimately does not have any engagement in a solid material within the thickness of the gypsum board. This amendment continues the previous amendment adopted during the 2007 code adoption cycle.

Code Section	Condition	Explanation of Amendment
2306.3 and Tables 2306.3 through 2306.3(2)	Geological	The Structural Engineers Association of Southern California (SEAOSC) and the Los Angeles City Joint Task Force that investigated the damages to buildings and structures during the 1994 Northridge Earthquake recommended reducing allowable shear values in wood structural panel shear walls or diaphragms that were not substantiated by cyclic testing. That recommendation was consistent with a report to the Governor from the Seismic Safety Commission of the State of California recommending that code requirements be "more thoroughly substantiated with testing." The allowable shear values for wood structural panel shear walls or diaphragms fastened with stapled nails are based on monotonic testing and do not take into consideration that earthquake forces load shear wall or diaphragm in a repeating and fully reversible manner. In September 2007, limited cyclic testing was conducted by a private engineering firm to determine if wood structural panels fastened with stapled nails would exhibit the same behavior as wood structural panels fastened with common nails. The test result revealed that wood structural panel fastened with stapled nails appeared to be much lower in strength and stiffness than wood structural panels fastened with common nails. It was recommended that the use of stapled nail as fasteners for wood structural panel shear walls or diaphragms not be permitted to resist seismic forces in structures assigned to Seismic Design Category D, E and F unless it can be substantiated by cyclic testing. Furthermore, the cities and unincorporated areas within the Los Angeles region have taken extra measures to maintain the structural integrity of the framing of shear walls and diaphragms designed for high levels of seismic forces by requiring wood sheathing be applied directly over the framing members and prohibiting the use of panels placed over gypsum sheathing. This amendment is intended to prevent the undesirable performance of nails when gypsum board softens due to cyclic earthquake displacements and the nail ultimately does not have any engagement in a solid material within the thickness of the gypsum board. This amendment continues the previous amendment adopted during the 2007 code adoption cycle, and is necessary due to the increased risk of significant earthquakes in the County.
2306.7	Geological	Due to the high geologic activities in the Southern California area and the expected higher level of performance on buildings and structures, this amendment limits the location where shear walls sheathed with lath, plaster or gypsum board are used in multi-level buildings. The poor performance of such shear walls sheathed with other materials in the 1994 Northridge Earthquake was investigated by the Structural Engineers Association of Southern California (SEAOSC) and the Los Angeles City Task Force and formed the basis for this amendment. Considering that shear walls sheathed with lath, plaster or gypsum board are less ductile than steel moment frames or wood structural panel shear walls, the cities and unincorporated areas of the Los Angeles region have taken the necessary measures to limit the potential structural damage that may be caused by the use of such walls at the lower level of multi-level building that are subject to higher levels of seismic loads. This amendment is a continuation of an amendment adopted during previous code adoption cycles.

Code Section	Condition	Explanation of Amendment
2308.3.4	Geological	With the higher seismic demand placed on buildings and structures in this region, interior walls can easily be called upon to resist over half of the seismic loading imposed on simple buildings or structures. Without a continuous foundation to support the braced wall line, seismic loads would be transferred through other elements such as non-structural concrete slab floors, wood floors, etc. The purpose of this amendment is to limit the use of the exception to structures assigned to Seismic Design Category A, B or C where lower seismic demands are expected. Requiring interior braced walls be supported by continuous foundations is intended to reduce or eliminate the poor performance of buildings or structures. This amendment is a continuation of an amendment adopted during previous code adoption cycles.
2308.12.2	Geological	Additional weight attributed to the use of heavy veneer substantially increases loads to conventionally braced walls in an earthquake. Moreover, normal to greater than normal wall loads that occur in an earthquake can seriously overstress wood bearing walls in combined seismic/gravity load combinations. Numerous conventionally framed veneer covered structures sustained serious damages in the Northridge Earthquake as a result of the heavy weight of the veneer. This amendment is a continuation of an amendment adopted during previous code adoption cycles, and is necessary due to the increased risk of significant earthquakes in the County.
2308.12.4 and Table 2308.12.4	Geological	This amendment specifies minimum sheathing thickness and nail size and spacing so as to provide a uniform standard of construction for designers and buildings to follow. This is intended to improve the performance level of buildings and structures that are subject to the higher seismic demands placed on buildings or structure in this region. This proposed amendment reflects the recommendations by the Structural Engineers Association of Southern California (SEAOSC) and the Los Angeles City Joint Task Force that investigated the poor performance observed in 1994 Northridge Earthquake. This amendment is a continuation of an amendment adopted during previous code adoption cycles, and is necessary due to the increased risk of significant earthquakes in the County.
2308.12.5	Geological	Due to the high geologic activities in the Southern California area and the expected higher level of performance on buildings and structures, this amendment limits the use of staple fasteners in resisting or transferring seismic forces. In September 2007, limited cyclic testing data was provided to the ICC Los Angeles Chapter Structural Code Committee showing that stapled wood structural shear panels do not exhibit the same behavior as nailed wood structural shear panels. The test results of stapled wood structural shear panels appeared much lower in strength and drift than nailed wood structural shear panel test results. Therefore, the use of staples as fasteners to resist or transfer seismic forces shall not be permitted without being substantiated by cyclic testing. This amendment is a continuation of a similar amendment adopted during previous code adoption cycles.
3401.8.1 to 3401.8.3	Geological	The greater Los Angeles/Long Beach region is a densely populated area having buildings constructed over and near a vast array of fault systems capable of producing major earthquakes, including but not limited to the recent 1994 Northridge Earthquake. The purpose of the amendments is to prevent inadequate construction or bracing to resist horizontal forces, thus becoming a hazard to life or property in the event of an earthquake.

Code Section	Condition	Explanation of Amendment
3401.9	Geological	The greater Los Angeles/Long Beach region is a densely populated area having buildings constructed over and near a vast array of fault systems capable of producing major earthquakes, including but not limited to the recent 1994 Northridge Earthquake. The purpose of the amendment is to save lives in the event of an earthquake when panics occur and glass shatters.
J101.1	Geological Topographical Climate	This section is revised to include erosion and sediment control measures to address the complex and diverse set of soil types and geologic conditions that exist in the Los Angeles County region.
J103.1 – J103.2	Geological Topographical Climate	This section is revised to provide adequate control of grading operations typical to the Los Angeles County region due to the complex and diverse set of soil types, climates, and geologic conditions that exist in the Los Angeles County region.
J104.2.1 – J104.4	Geological Topographical Climate	Sections revised or added to provide adequate control of grading operations typical to the Los Angeles County region due to the complex and diverse set of soil types, climates, and geologic conditions that exist in the Los Angeles County region.
J105.1- J105.14	Geological Topographical Climate	Sections revised or added to provide adequate control of grading operations typical to the Los Angeles County region due to the complex and diverse set of soil types, climates, and geologic conditions that exist in the Los Angeles County region.
J106.1	Geological Topographical Climate	Section revised to require more stringent cut slope ratios to address the complex and diverse set of soil types and geologic conditions that exist in the Los Angeles County region.
J106.2	Geological Topographical Climate	Section added to require drainage terraces to address the complex and diverse set of soil types, climates, and geologic conditions which exist in the Los Angeles County region.
J107.1- J107.7	Geological Topographical Climate	Sections revised to provide more stringent fill requirements for slope stability, and settlement due to the complex and diverse set of soil types, climates, and geologic conditions which exist in the Los Angeles County region.
J107.8 – J107.9	Geological Topographical Climate	Sections revised to provide more stringent inspection and testing requirements for fill slope stability due to the complex and diverse set of soil types, climates, and geologic conditions which exist in the Los Angeles County region.
J108.1 – J108.4	Geological Topographical Climate	Sections revised to provide more stringent slope setback requirements to address the complex and diverse set of soil types, climates, and geologic conditions which exist in the Los Angeles County region.
J109.1 – J109.3	Geological Topographical Climate	Sections revised to provide more stringent drainage and terracing requirements to address the complex and diverse set of soil types, climates, and geologic conditions which exist in the Los Angeles County region.
J109.5	Geological Topographical Climate	Subsection added to provide for adequate outlet of drainage flows due to the diverse set of soil types, climates, and geologic conditions which exist in the Los Angeles County region.
J110 - J110.8.5	Geological Topographical Climate	Sections revised or added to provide for State requirements of storm water pollution prevention and more stringent slope planting, and slope stability requirements to control erosion due to the complex and diverse set of soil types, climates, and geologic conditions that exist in the Los Angeles County region.
J111	Geological Topographical Climate	Section revised to reference additional standards for soils testing due to the complex and diverse set of soil types, climates, and geologic conditions that exist in the Los Angeles County region.

SECTION 109. This ordinance shall become operative on January 1, 2011.

SECTION 110. This ordinance shall be published in The Daily Commerce a newspaper printed and published in the County of Los Angeles.

Gloria Molina
Chair

ATTEST:

Sachi A. Hamai
Executive Officer -
Clerk of the Board of Supervisors
County of Los Angeles

I hereby certify that at its meeting of November 23, 2010 the foregoing ordinance was adopted by the Board of Supervisors of said County of Los Angeles by the following vote, to wit:

	Ayes		Noes
Supervisors	Mark Ridley-Thomas	Supervisors	None
	Zev Yaroslavsky		
	Don Knabe		
	Michael D. Antonovich		
	Gloria Molina		

Effective Date: December 23, 2010

Operative Date: January 1, 2011

Sachi A. Hamai
Executive Officer -
Clerk of the Board of Supervisors
County of Los Angeles

I hereby certify that pursuant to Section 25103 of the Government Code, delivery of this document has been made.

SACHI A. HAMAI
Executive Officer
Clerk of the Board of Supervisors

By _____
Deputy

APPROVED AS TO FORM:
ANDREA SHERIDAN ORDIN
County Counsel

By _____
Leela Kapur
Chief Deputy County Counsel

S:\Ordinances\County Counsel\2010\2010-0053