COUNTY OF LOS ANGELES
DEPARTMENT OF PUBLIC WORKS

"To Enrich Lives Through Effective and Caring Service"

900 SOUTH FREMONT AVENUE
ALHAMBRA, CALIFORNIA 91803-1331

http://dpw.lacounty.gov

GAIL FARBER, Director

ADDRESS ALL CORRESPONDENCE TO:
P.O. BOX 1460
ALHAMBRA, CALIFORNIA 91802-1460

June 21, 2016

ADOPTED
BOARD OF SUPERVISORS
COUNTY OF LOS ANGELES

28 June 21, 2016

LORI GLASGOW
EXECUTIVE OFFICER

The Honorable Board of Supervisors
County of Los Angeles
383 Kenneth Hahn Hall of Administration
500 West Temple Street
Los Angeles, California 90012

Dear Supervisors:

AWARD SERVICES CONTRACT FOR
WEST COAST BASIN BARRIER PROJECT TELEMETRY SYSTEM PHASE 2B
CONSULTANT SERVICES AGREEMENT
(SUPERVISORIAL DISTRICT 4)
(3 VOTES)

CIO RECOMMENDATION: APPROVE (X) APPROVE WITH MODIFICATION ( )
DISAPPROVE ( )

SUBJECT

This action is to approve entering into a consultant services agreement with Leed Electric, Inc., for the implementation and installation of the West Coast Basin Barrier Project Telemetry System Phase 2B, which will expand the existing seawater barrier telemetry system and enable the Department of Public Works to further remotely collect, store, analyze, and present status information on operational conditions at additional facilities associated with the West Coast Basin Barrier Project.

IT IS RECOMMENDED THAT THE BOARD:

1. Find that the work covered by this consultant services agreement to extend the existing seawater barrier telemetry system as part of the West Coast Basin Barrier Project, is categorically exempt from the provisions of the California Environmental Quality Act under Section 15301 of the California Environmental Quality Act Guidelines.

2. Award and authorize the Director of Public Works or her designee to execute a consultant services agreement with Leed Electric, Inc., for the implementation and installation of the West Coast Basin Barrier Project Telemetry System Phase 2B for a maximum contract sum not-to-exceed

$769,421.65. The term of this agreement, shall commence upon full execution by both parties and unless modified, shall terminate 1 year after the final acceptance date by Public Works.

3. Authorize the Director of Public Works or her designee to execute change orders for unforeseen, additional work directly related to the scope of the agreement and to increase the contract amount up to an additional 10 percent by utilizing contingency funds in the total amount of $69,947.42 included in the maximum contact sum not-to-exceed $769,421.65.

4. Authorize the Director of Public Works or her designee to suspend work if, in the opinion of the Director of Public Works or her designee, it is in the best interest of the County to do so.

PURPOSE/JUSTIFICATION OF RECOMMENDED ACTION

The purpose of the recommended actions is to expand the existing seawater barrier telemetry system on the West Coast Basin Barrier Project (WCBBP). The Department of Public Works has an existing seawater barrier telemetry system installed and functioning that monitors segments of the Alamitos Barrier Project (ABP), the Dominguez Gap Barrier Project (DGBP), and the WCBBP. The existing seawater barrier telemetry system utilizes specialized software related equipment and appurtenances to monitor operational conditions at injection wells, observation wells, and pressure reducing valves. The data is transmitted directly to Public Works' Headquarters in real-time, where engineers can evaluate the information and improve operational efficiency of the seawater barriers in order to protect the groundwater from seawater intrusion. This work will expand the existing seawater barrier telemetry system to monitor segments of the WCBBP currently without a telemetry system. The implementation and installation of the WCBBP Telemetry System Phase 2B will be seamless and will utilize the same hardware and software configuration used on the existing seawater barrier telemetry system.

Implementation of Strategic Plan Goals

The Countywide Strategic Plan directs the provisions of Operational Effectiveness/Fiscal Sustainability (Goal 1) and Community Support and Responsiveness (Goal 2). The recommended actions will help achieve these goals by maximizing the collection of accurate and timely data to ensure that the County's groundwater supply is protected from seawater intrusion.

FISCAL IMPACT/FINANCING

There will be no impact to the County General Fund.

This agreement is for a not-to-exceed amount of $769,421.65, which includes $69,947.42 in contingency funds for necessary changes or additions that may arise during the progress of the work related to the original scope of the agreement. Funding for these services is included in the Fiscal Year 2015-16 Internal Service Fund Budget, which will be reimbursed by the Flood Control District Fund Budget. Additional work within this allowance will not be performed without prior written authorization from the Director of Public Works or her designee.

FACTS AND PROVISIONS/LEGAL REQUIREMENTS

The recommended consultant, Leed Electric, Inc., is a certified local small business enterprise located in Santa Fe Springs, California. This agreement will commence upon full execution by both parties, and unless modified, shall terminate 1 year after the final acceptance date by Public Works.

The Chief Information Office (CIO) reviewed this request and recommends approval. The CIO determined that this expansion of the existing WCBBP Telemetry System does not require any new information technology acquisition. Therefore, no formal CIO analysis is required. The recommended agreement was solicited on an open-competitive basis and is in accordance with the applicable Federal, State, and County requirements. The consultant is in compliance with the requirements of the Chief Executive Officer and the Board.

The agreement will be substantially similar to the form previously approved as to form by County Counsel (Enclosure A). Prior to the Director of Public Works or her designee executing this agreement, the consultant will sign and County Counsel will review it as to form.

The implementation of the WCBBP Telemetry System was split into two phases. Phase 1B was awarded for implementation and installation by the Board on February 2, 2010, for a contract amount of $272,849.50 and was completed on March 28, 2011. It included the installation of conduits, pull boxes, and new observation well vaults. The proposed Phase 2B includes programming of commercial off-the-shelf software and the installation of cables, instrumentation, and sensors within the existing facilities constructed in Phase 1B of the project. Phase 2B requires a 1-year maintenance and support period from the date of Public Works' final acceptance to ensure that all instrumentation and system components are integrated and properly functioning.

The award of the agreement will not result in unauthorized disclosure of confidential information and will be in full compliance with Federal, State, and County regulations. The agreement contains terms and conditions supporting the Board's ordinances, policies, and programs including, but not limited to: County's Greater Avenues for Independence (GAIN) and General Relief Opportunities for Work (GROW) Programs, Board Policy No. 5.050; Contract Language to Assist in Placement of Displaced County Workers, Board Policy No. 5.110; Reporting of Improper Solicitations, Board Policy No. 5.060; Notice to Contract Employees of Newborn Abandonment Law (Safely Surrendered Baby Law), Board Policy No. 5.135; Contractor Employee Jury Service Program, Los Angeles County Code, Chapter 2.203; Notice to Employees Regarding the Federal Earned Income Credit (Federal Income Tax Law, Internal Revenue Service Notice 1015); Contractor Responsibility and Debarment, Los Angeles County Code, Chapter 2.202; the Los Angeles County's Child Support Compliance Program, Los Angeles County Code, Chapter 2.200; Defaulted Property Tax Reduction Program Ordinance, Los Angeles County Code, Chapter 2.206; and the standard Board-directed clauses that provide for contract termination or renegotiation.

Proof of the required Comprehensive General and Automobile Liability insurance policies, naming the County as additional insured, and evidence of Workers' Compensation insurance will be obtained from the consultant before any work is assigned. On February 10, 2016, the Request for Proposals (RFP) for this solicitation was submitted to the appropriate union for review. The union has not asked to meet with Public Works regarding this solicitation.

ENVIRONMENTAL DOCUMENTATION

The proposed project to expand the existing seawater barrier telemetry system as part of the WCBBP Phase 2B, is categorically exempt from the California Environmental Quality Act(CEQA) and is within a class of projects that has been determined not to have a significant effect on the environment in that it meets the criteria set forth in Section 15301 of CEQA Guidelines and Class 1 of the County's Environmental Document Reporting Procedures and Guidelines, Appendix G. Phase 1B work for the WCBBP was completed on March 28, 2011. The current proposed work for Phase

2B meets the requirements of Section 15301 in that it involves minor alteration of existing public structures, facilities, mechanical equipment, and topographical features, involving negligible or no expansion of use beyond that existing at the time of the Board's consideration of this item.

Upon the Board's approval of the recommended actions, a Notice of Exemption will be filed with the Registrar-Recorder/County Clerk.

CONTRACTING PROCESS

On January 21, 2016, Public Works issued a RFP. The RFP was posted on the "Doing Business with Us" website and the "Public Works Contract Opportunities" website. On February 22, 2016, two firms responded to the RFP. An evaluation committee, comprised of staff from Public Works, evaluated the proposals and determined that Leed Electric, Inc., is the highest rated, responsive, and responsible proposer for this project. The evaluation was based on criteria described in the RFP, which included the price, work plan, experience, personnel qualifications, performance history/references, and understanding of the work requirements. The evaluation was completed without regard to race, creed, color, or gender.

IMPACT ON CURRENT SERVICES (OR PROJECTS)

The WCBBP Telemetry System Phase 2B Project will expand the existing seawater barrier telemetry system to allow Public Works to monitor additional injection and observation wells in real-time to operate the WCBBP more effectively and ensure that the County's groundwater supply is protected from seawater intrusion.

CONCLUSION

Please return an adopted copy of this letter to Public Works, Water Resources Division.

Respectfully submitted,

Gail Farber

GAIL FARBER
Director

Reviewed by:

PETER LOO
Acting Chief Information Officer

GF:CS:vt

Enclosures

c: Chief Executive Office (Rochelle Goff)
Executive Office
County Counsel (Truc Moore)
Chief Information Office (Eric Sasaki)

WEST COAST BASIN BARRIER PROJECT TELEMETRY SYSTEM PHASE 2B
AGREEMENT FOR CONSULTANT SERVICES

THIS AGREEMENT, made and entered into this _____ day of_____, 2016.

BY AND BETWEEN

COUNTY OF LOS ANGELES, a body corporate and politic, hereinafter referred to as County,

AND

LEED ELECTRIC, INC.
hereinafter referred to as Consultant,

County has determined that it is a matter of public convenience and necessity to engage the specialized services of a Consultant for the installation and implementation of the West Coast Basin Barrier Project Telemetry System Phase 2B which will extend the existing seawater barrier telemetry system and will enable the County of Los Angeles Department of Public Works to remotely collect, store, analyze, and present status information on operational conditions at facilities associated with the West Coast Basin Barrier Project.

Consultant is a firm of recognized professionals with extensive experience and training in its specialized field. In rendering these services, Consultant shall, at a minimum, exercise the ordinary care and skill expected of the average practitioner in Consultant's profession acting under similar circumstances. The work will involve the performance of professional, expert, and/or technical services of a temporary or part-time duration; and

The parties hereto do mutually agree as follows:

1. Definition

County means either County; County, as agent for such joint powers authority or nonprofit corporation as may be involved in the issuance of bonds, certificates of participation, or other evidences of indebtedness to finance the work contemplated herein; or said joint powers authority or nonprofit corporation.

2. Consultant's Services

The scope of work shall be as outlined in the Attachment dated June 14, 2016. No work shall commence on this project until a written Notice to Proceed is issued by County. County does not guarantee or promise that any work will be assigned to Consultant under this contract until a written Notice to Proceed is issued by the County.

3. Consideration

In consideration of the performance by Consultant in a manner satisfactory to County of the services described in Article 2 above, including receipt and acceptance of such work by Director of the County of Los Angeles Department of Public Works (hereinafter called Director), County agrees to pay Consultant a maximum not to exceed fee of Seven Hundred Sixty-Nine Thousand, Four Hundred Twenty-one Dollars and Sixty-Five Cents ($769,421.65) in the manner set forth immediately below and according to the fee schedule attached to this Agreement as Attachment 3.

Consultant shall invoice County upon the completion of tasks, subtasks, deliverables, and other additional services specified in this Agreement, Scope of Work, and any change orders, as applicable, and which have been approved in writing by the County.

a. Payments for the work accomplished shall be made upon verification and acceptance of such work by Director, as stated in the Attachment dated June 14, 2016, up to a maximum of $769,421.65. Invoices shall be accompanied by an analysis of work completed for the invoice period. This analysis shall be prepared in a format satisfactory to Director.

b. Subject to the maximum not-to-exceed fee of $769,421.65, Supplemental Consultant Services may be required at County's discretion, upon prior written authorization by Director, and will be based on Consultant's fee schedule attached to this Agreement as Attachment 3.

c. In the event that budget reductions occur in any fiscal year covered by this Agreement that may cause County to consider terminating this Agreement, the County may attempt to renegotiate the terms of this Agreement to reduce the cost thereof in lieu of termination under the termination provisions of the Agreement.

d. All funds for payment of services rendered after June 30 of the current fiscal year are subject to County's legislative appropriation for this purpose. Payments for services following June 30 of each fiscal year are dependent upon the same action. Notwithstanding any other provision of this Agreement, County shall not be obligated for Consultant's performance hereunder or by any provision of this Agreement during any of County's future fiscal years unless and until County's Board of Supervisors appropriates funds for this Agreement in County's budget for each future fiscal year, and in the event that funds are not appropriated for this Agreement, this Agreement shall terminate as of June 30 of the last fiscal year for which funds were appropriated. County shall notify Consultant in writing of such nonappropriation of funds at the earliest possible date.

e. Consultant will not be required to perform services which will exceed the Contract amount, scope of work, and Contract dates without amendment to this Agreement. Consultant will not proceed with additional services without prior written authorization. Consultant will not be paid for any expenditures beyond the Contract amount stipulated without amendment to this Agreement.

f. Consultant will notify County when Contract amount has been incurred up to 75% of the Contract total.

4. Equipment and Supplies

Consultant agrees to furnish all necessary equipment and supplies used in the performance of the aforementioned services at Consultant's sole cost and expense.

5. County's Responsibility

County will make available drawings, specifications, and other records as available in County Department of Public Works' file. Notwithstanding the foregoing, County does not represent the accuracy of the content of said materials.

6. County's Representative

Director or Director's authorized representative, shall represent County in all matters pertaining to the services to be rendered pursuant to this Agreement.

7. Term

The term of this Agreement shall commence upon the execution by both parties, and unless otherwise modified, shall terminate one year after the final acceptance date by Public Works.

8. Ownership of County Materials

a. Consultant and County agree that all materials, including but not limited to, designs, specifications, techniques, plans, reports, deliverables, data, photographs, diagrams, maps, images, graphics, text, videos, advertising, software, source codes, website plans and designs, interactive media, drafts, working papers, outlines, sketches, summaries, edited and/or unedited versions of deliverables, and any other materials or information developed under this Agreement and any and all Intellectual Property rights to these materials, including any copyrights, trademarks, service marks, trade secrets, trade names, unpatented inventions, patent applications, patents, design rights, domain name rights, know-how, and any other proprietary rights and derivatives thereof, are and/or shall be the sole property of

County (hereafter collectively, "County Materials"). Consultant hereby assigns and transfers to County all Consultant's right, title and interest in and to all such County Materials developed under this Agreement.

Notwithstanding such County ownership in the County Materials, Consultant may retain possession of working papers and materials prepared by Consultant under this Contract. During and for a minimum of five years subsequent to the term of this Contract, County shall have the right to inspect any and all such working papers and materials, make copies thereof and use the working papers and materials and the information contained therein.

b. Consultant shall execute all documents requested by County and shall perform all other acts requested by County to assign and transfer to, and vest in County, all Consultant's right, title and interest in and to the County Materials, including, but not limited to, any and all copyrights, trademarks, service marks, trade names, unpatented inventions, patent applications, patents, design rights, domain name rights, know-how, and any other proprietary rights and derivatives thereof resulting from this Contract. County shall have the right to register all applicable copyrights, trademarks and patents in the name of the County of Los Angeles. Further, County shall have the right to assign, license, or otherwise transfer any and all County's rights, title and interest, including, but not limited to copyrights, trademarks, and patents, in and to the County Materials.

c. Consultant represents and warrants that the County Materials prepared herein under this Agreement, are the original work of Consultant and do not infringe upon any Intellectual Property or proprietary rights of third parties. For those portions of the County Materials that are not the original work of Consultant, Consultant represents and warrants that it has secured all appropriate licenses, rights, and/or permission from appropriate third parties to include such materials in the County Materials.

   Consultant shall defend, indemnify and hold County harmless against any claims by third parties based on infringement of copyright, patent, trade secret, trademark, or any other claimed Intellectual Property or proprietary right, arising from County's use of County Materials created and/or prepared by Consultant. Consultant will also indemnify and defend at its sole expense, any action brought against County based on a claim that County Materials furnished hereunder by Consultant and used within the scope of this Agreement infringe any copyright, patent, trade secret, trademark, or any other claimed intellectual property or proprietary right of third parties, and Consultant will pay any costs, damages and attorney's fees incurred by County. County will notify Consultant promptly and in writing of any such action or claim and will permit Consultant to fully participate in the defense thereof.

d. Consultant shall affix the following notice to all County Materials: "© Copyright 2016 (or such other appropriate date of first publication), County of Los Angeles. All Rights Reserved." Consultant shall affix such notice on the title page of all images, photographs, documents and writings, and otherwise as County may direct.

e. County shall also have the sole right to control the preparation, modification, and revisions to, all acknowledgment and/or attribution language for all County Materials resulting from this Agreement. County will however, honor requests by Consultant seeking removal of all acknowledgment and/or attribution language relating to the Consultant, should Consultant no longer wish to receive attribution for its work on the County Materials.

f. If directed to do so by County, Consultant will place the County name and County logo on County Materials developed under this Agreement. Consultant may not, however, use the County name and County logo on any other materials prepared or developed by Consultant that falls outside the scope of this Agreement.

9. Indemnification and Insurance

The Indemnification and Insurance Provisions are set forth in Attachment 2 of this Agreement.

10. Anti-Discrimination

The following provisions are required by Section 4.32.010 et seq. of the Los Angeles County Code:

Consultant certifies and agrees that all persons employed by Consultant, its affiliates, subsidiaries, or holding companies are, and will be, treated equally by Consultant without regard to or because of race, religion, ancestry, national origin, or sex, and in compliance with state and Federal anti-discrimination laws. Consultant further certifies and agrees that it will deal with its subconsultants, bidders, and vendors without regard to or because of race, religion, ancestry, national origin, or sex. Consultant agrees to allow access to its employment records during regular business hours to verify compliance with the foregoing provisions when so requested by County.

Consultant specifically recognizes and agrees that if County finds that any of the foregoing provisions have been violated, the same shall constitute a material breach of Contract upon which County may determine to cancel, terminate, or suspend the Contract. While County reserves the right to determine individually that the anti-discrimination provision of the Contracts have been violated, in addition, a determination by the California Fair Employment Practices Commission or the Federal Equal Employment Opportunity Commission that Consultant has violated state or

Federal anti-discrimination laws shall constitute a finding by County that Consultant has violated the anti-discrimination provisions of the Contract.

At its option, and in lieu of canceling, terminating, or suspending the Contract, County may impose damages for any violation of the anti-discrimination provisions of this paragraph, in the amount of Two Hundred Dollars ($200) for each violation found and determined. County and Consultant specifically agree that the aforesaid amount shall be imposed as liquidated damages, and not as a forfeiture or penalty. It is further specifically agreed that the aforesaid amount is presumed to be the amount of damages sustained by reason of any such violation, because from the circumstances and the nature of the violation, it is impracticable and extremely difficult to fix actual damages.

11. Independent Contractor Status

This Agreement is by and between County of Los Angeles and Consultant and is not intended, and shall not be construed, to create the relationship of agent, servant, employee, partnership, joint venture, or association, as between County and Consultant. The employees and agents of one party shall not be, or be construed to be, the employees or agents of the other party for any purpose whatsoever.

The Consultant shall be solely liable and responsible for providing to, or on behalf of, all persons performing work pursuant to this Contract all compensation and benefits. The County shall have no liability or responsibility for the payment of any salaries, wages, unemployment benefits, disability benefits, Federal, State, or local taxes, or other compensation, benefits, or taxes for any personnel provided by or on behalf of the Contractor. Consultant understands and agrees that all persons furnishing services to County pursuant to this Agreement are, for purposes of Workers' Compensation liability, employees solely of Consultant and not of County.

Consultant shall bear the sole responsibility and liability for furnishing workers' compensation benefits to any person for injuries arising from, or connected with, services performed on behalf of Consultant pursuant to this Agreement.

12. County's Quality Assurance Plan

County, or its agent, will evaluate Consultant's performance under this Agreement on not less than an annual basis. Such evaluation will include assessing Consultant's compliance with all Contract terms and performance standards. Consultant deficiencies which County determines are severe or continuing, and that may place performance of the Agreement in jeopardy if not corrected, will be reported to the Board of Supervisors. The report will include improvement/corrective action measures taken by County and Consultant. If improvement does not occur consistent with the

corrective action measures, County may terminate this Agreement or impose other penalties as specified in this Agreement.

13. Assignment

This Agreement shall not be assigned without the prior written consent of County. Any attempt to assign without such consent shall be void and confer no rights on any third parties.

14. Forum Selection

Consultant hereby agrees to submit to the jurisdiction of the courts of the State of California. The exclusive venue of any action brought by Consultant, on Consultant's behalf or on the behalf of any subconsultant, which arises from this Agreement or is concerning or connected with services performed pursuant to this Agreement, shall be deemed to be in the courts of the State of California located in Los Angeles County, California.

15. Conflict of Interest

No County employee in a position to influence the award of this Agreement or any competing Agreement, and no spouse or economic dependent of such employee, shall be employed in any capacity by Consultant herein, or have any other direct or indirect financial interest in this Agreement. No officer or employee of the Consultant who may financially benefit from the performance of work hereunder shall in any way participate in the County's approval, or ongoing evaluation, of such work, or in any way attempt to unlawfully influence the County's approval or ongoing evaluation of such work.

The Consultant shall comply with all conflict of interest laws, ordinances, and regulations now in effect or hereafter to be enacted during the term of this Agreement. The Consultant warrants that it is not now aware of any facts that create a conflict of interest. If the Consultant hereafter becomes aware of any facts that might reasonably be expected to create a conflict of interest, it shall immediately make full written disclosure of such facts to the County. Full written disclosure shall include, but is not limited to, identification of all persons implicated and a complete description of all relevant circumstances. Failure to comply with the provisions of this sub-paragraph shall be a material breach of this Agreement.

16. Prohibition from Participation in Future Solicitation(s)

Neither Consultant nor any subsidiary of or subcontractor to Consultant shall participate in any way in any future solicitation conducted by County that includes or is based upon any solicitation document that is developed as a result of the services rendered by Consultant under this Agreement. As this prohibition applies to subcontractors of the Consultant, Consultant shall notify any subcontractors providing

services under this Agreement of this prohibition before they commence work under this Agreement. Any response to a solicitation submitted by Consultant or by any subsidiary of or subcontractor to Consultant in violation of this provision shall be rejected by County. This provision shall survive the expiration or other termination of this Agreement.

17. Lobbying

Consultant and each County lobbyist or County lobbying firm as defined in Los Angeles County Code Section 2.160.010, retained by Consultant, shall fully comply with County Lobbyist Ordinance, Los Angeles County Code Chapter 2.160. Failure on the part of Consultant or any County lobbyist or County lobbying firm retained by Consultant to fully comply with County Lobbyist Ordinance shall constitute a material breach of this Contract, upon which County may immediately terminate or suspend this Contract.

18. Gratuities

It is improper for any County officer, employee, or agent to solicit consideration, in any form, from Consultant with the implication, suggestion, or statement that Consultant's provision of the consideration may secure more favorable treatment for Consultant in the award of the Contract or that Consultant's failure to provide such consideration may negatively affect County's consideration of Consultant's submittal. Consultant shall not offer or give, either directly or through an intermediary, consideration, in any form, to a County officer, employee, or agent for the purpose of securing favorable treatment with respect to the award of the Contract.

Consultant shall immediately report any attempt by a County officer, employee, or agent to solicit such improper consideration. The report shall be made either to County manager charged with the supervision of the employee, or to County Auditor-Controller's Employee Fraud Hotline at (800) 544-6861. Failure to report such a solicitation may result in Consultant's submittal being eliminated from consideration.

Among other items, such improper consideration may take the form of cash, discounts, service, the provision of travel or entertainment, or tangible gifts.

19. Employment of Laid-Off County Employee

Should Consultant require additional or replacement personnel to perform services under this Contract other than the performance of a skilled trade, Consultant shall give first consideration for such employment openings to qualified County employees who are targeted for layoff or qualified former County employees who are on a re-employment list.

20. Consultant's Warranty of Adherence to County's Child Support Compliance Program

Consultant acknowledges that County has established a goal of ensuring that all individuals who benefit financially from County through Contract are in compliance with their court-ordered child, family, and spousal support obligations in order to mitigate the economic burden otherwise imposed upon County and its taxpayers.

As required by County's Child Support Compliance Program (County Code Chapter 2.200) and without limiting Consultant's duty under this Contract to comply with all applicable provisions of law, Consultant warrants that it is now in compliance and shall during the term of this Contract maintain compliance with employment and wage reporting requirements as required by the Federal Social Security Act (42 USC Section 653a) and California Unemployment Insurance Code Section 1088.5, and shall implement all lawfully served Wage and Earnings Withholding Orders or District Attorney Notices of Wage and Earnings Assignment for Child or Spousal Support, pursuant to Code of Civil Procedure Section 706.031 and Family Code Section 5246(b).

Failure of Consultant to maintain compliance with these requirements shall constitute a default by Consultant under this Contract.

21. Consultant's Acknowledgment of County's Commitment to Child Support Enforcement

Consultant acknowledges that County places a high priority on the enforcement of child support laws and the apprehension of child support evaders. Consultant understands that it is County's policy to encourage all County consultants to voluntarily post County's L.A.'s Most Wanted: Delinquent Parents poster in a prominent position at Consultant's place of business.

22. Termination for Improper Consideration

County may, by written notice to Consultant, immediately terminate the right of Consultant to proceed under this Agreement if it is found that consideration, in any form, was offered or given by Consultant, either directly or through an intermediary, to any County officer, employee, or agent with the intent of securing the Agreement or securing favorable treatment with respect to the award, amendment, or extension of the Agreement or the making of any determinations with respect to Consultant's performance pursuant to the agreement. In the event of such termination, County shall be entitled to pursue the same remedies against Consultant as it could pursue in the event of default by Consultant.

Consultant shall immediately report any attempt by a County officer or employee to solicit such improper consideration. The report shall be made either to County

manager charged with the supervision of the employee or to County Auditor-Controller's Employee Fraud Hotline at (800) 544-6861.

Among other items, such improper consideration may take the form of cash, discounts, service, the provision of travel or entertainment, or tangible gifts.

23. Consideration of Hiring GAIN/GROW Program Participants

Should the Consultant require additional or replacement personnel after the effective date of this Contract, the Consultant shall give consideration for any such employment openings to participants in the County's Department of Public Social Services Greater Avenues for Independence (GAIN) Program or General Relief Opportunity for Work (GROW) Program who meet the Contractor's minimum qualifications for the open position. For this purpose, consideration shall mean that the Consultant will interview qualified candidates. The County will refer GAIN/GROW participants by job category to the Contractor. Consultant shall report all job openings with job requirements to: GAINGROW@dpss.lacounty.gov to obtain a list of qualified GAIN/GROW job candidates.

In the event that both laid-off County employees and GAIN/GROW participants are available for hiring, County employees shall be given first priority.

24. Notice to Employees Regarding the Federal Earned Income Credit

Consultant shall notify its employees, and shall require each subconsultant to notify its employees, that they may be eligible for the Federal Earned Income Credit under the Federal income tax laws. Such notice shall be provided in accordance with the requirement set forth in Internal Revenue Service Notice 1015.

25. Recycled Bond Paper

Consistent with the Board of Supervisors' policy to reduce the amount of solid waste deposited at the County landfills, the Contractor agrees to use recycled-content paper to the maximum extent possible on this Contract.

26. County Rights

The County may employ, either during or after performance of this Contract, any right of recovery the County may have against the Consultant by any means it deems appropriate including, but not limited to, set-off, action at law or in equity, withholding, recoupment, or counterclaim. The rights and remedies of the County under this Contract are in addition to any right or remedy provided by California law.

27. Fair Labor Standards Act

Consultant shall comply with all applicable provisions of the Federal Fair Labor Standards Act, and shall indemnify, defend, and hold harmless County, its agents, officers, and employees from any and all liability including, but not limited to, wages, overtime pay, liquidated damages, penalties, court costs, and attorneys' fees arising under any wage and hour law including, but not limited to, the Federal Fair Labor Standards Act for services performed by Consultant's employees for which County may be found jointly or solely liable.

28. Prevailing Wage Requirements

This work includes prevailing wage and non-prevailing wage work.

a. Prevailing Wages

When applicable, the services provided in this Contract constitute "public works" as defined in California Labor Code 1720, and are therefore subject to payment of prevailing wages, compliance monitoring and enforcement by the Department of Industrial Relations (DIR).

The Director of the DIR has established the general prevailing rate of per diem wages for each craft, classification, type of worker, or mechanic needed to execute public works and improvements. The current general prevailing wage rate determinations are available at www.dir.ca.gov/dlsr/pwd/index.htm. The Contractor is required to pay its agents and employees the applicable, current prevailing wage rate and is responsible for selecting the classification of workers required to perform this service.

The Contractor agrees to comply with the provisions of Section 1775 of the California Labor Code relating to the payment of prevailing wages, the utilization of apprentices in accordance to LC 1777.5, and the assessment of penalties determined by the California Labor Commissioner. Pursuant to Section 1773.2 of the California Labor Code, copies of the prevailing rate of per diem wages are on file at the County Department of Public Works, Construction Division, and will be made available for inspection by request to the Contract Administrator. Future effective wage rates will be on file with the Department of Industrial Relations. The new wage rates shall become effective on the day following the expiration date of the current determinations and apply to the Contract in the same manner as if they had been included or referenced in the Contract.

b. Work Records

The Contractor shall comply with the requirements of Section 1812 of the Labor Code. The Contractor shall maintain an accurate written record of all employees working on the project each calendar day. The record shall include each

employee's name, Social Security number, job classification, and the actual number of hours worked.

c. Posting of Notices

The Contractor shall comply with the provisions of Section 1773.2 of the Labor Code. The Contractor shall post a copy of the prevailing wage rates at the worksite and comply with applicable law including posting of jobsite notices required by 8 California Code Reg. §16451(d):

"This public works project is subject to monitoring and investigative activities by the Compliance Monitoring Unit (CMU) of the Division of Labor Standards Enforcement, Department of Industrial Relations, State of California. This Notice is intended to provide information to all workers employed in the execution of the Contract for public work and to all contractors and other persons having access to the jobsite to enable the CMU to ensure compliance with and enforcement of prevailing wage laws on public works projects.

The prevailing wage laws require that all workers be paid at least the minimum hourly wage as determined by the Director of Industrial Relations for the specific classification (or type of work) performed by workers on the project. These rates are listed on a separate jobsite posting of minimum prevailing rates required to be maintained by the public entity, which awarded the public works Contract. Complaints concerning nonpayment of the required minimum wage rates to workers on this project may be filed with the CMU at any office of the Division of Labor Standards Enforcement (DLSE).

Local Office Telephone Number:

Division of Labor Standards Enforcement Office
320 West Fourth Street, Suite 450
Los Angeles, CA 90013
(213) 620-6330

Complaints should be filed in writing immediately upon discovery of any violations of the prevailing wage laws due to the short period of time following the completion of the project that the CMU may take legal action against those responsible.

Complaints should contain details about the violations alleged (for example, wrong rate paid, not all hours paid, overtime rate not paid for hours worked in excess of 8 hours per day or 40 hours per week, etc.) as well as the name of the employer, the public entity which awarded the public works Contract, and the location and name of the project.

For general information concerning the prevailing wage laws and how to file a complaint concerning any violation of these prevailing wage laws, you may contact

any DLSE office. Complaint forms are also available at the Department of Industrial Relations website found at http://www.dir.ca.gov/Public-Works/PublicWorks.html."

d. Certified Payroll Records

The Contractor shall comply with the requirements of Section 1776 of the Labor Code. Contractor and Subcontractors, if any, must furnish certified payroll records directly to the Labor Commissioner (aka Division of Labor Standards Enforcement) in a format prescribed by the Labor Commissioner.

e. When requested by the County, electronic certified payroll records must be submitted to the County, through an online system designated by the County.

29. Employment Eligibility Verification

Consultant warrants that it fully complies with all Federal statutes and regulations regarding employment of aliens and others, and that all its employees performing services hereunder meet the citizenship or alien status requirements contained in Federal statutes and regulations. Consultant shall obtain, from all covered employees performing services hereunder, all verifications and other documentation of employment eligibility status required by Federal statutes and regulations as they currently exist and as they may be hereafter amended. Consultant shall retain such documentation for all covered employees for the period prescribed by law. Consultant shall indemnify, defend, and hold harmless County, its officers, and employees from employer sanctions and any other liability which may be assessed against Consultant or County in connection with any alleged violation of Federal statutes or regulations pertaining to the eligibility for employment of persons performing services under this Agreement.

30. Consultant Responsibility and Debarment

a. A responsible Consultant is a Consultant who has demonstrated the attribute of trustworthiness, as well as quality, fitness, capacity, and experience to satisfactorily perform the Contract. It is the County's policy to conduct business only with responsible consultants. Consultant is a Consultant who has demonstrated the attribute of trustworthiness, as well as quality, fitness, capacity, and experience to satisfactorily perform the Contract. It is the County's policy to conduct business only with responsible consultants.

b. The Consultant is hereby notified that, in accordance with Chapter 2.202 of the County Code, if the County acquires information concerning the performance of the Consultant on this or other Contracts which indicates that the Consultant is not responsible, the County may, in addition to other remedies provided in the

Contract, debar the Consultant from bidding or proposing on, or being awarded, and/or performing work on County Contracts for a specified period of time, which generally will not exceed five years but may exceed five years or be permanent if warranted by the circumstances, and terminate any or all existing Contracts the Consultant may have with the County.

c. The County may debar a Consultant if the Board of Supervisors finds, in its discretion, that the Consultant has done any of the following: (1) violated a term of a Contract with the County or a nonprofit corporation created by the County; (2) committed an act or omission which negatively reflects on the Consultant's quality, fitness or capacity to perform a Contract with the County, any other public entity, or a nonprofit corporation created by the County, or engaged in a pattern or practice which negatively reflects on same; (3) committed an act or offense which indicates a lack of business integrity or business honesty, or (4) made or submitted a false claim against the County or any other public entity.

d. If there is evidence that the Consultant may be subject to debarment, the Department will notify the Consultant in writing of the evidence which is the basis for the proposed debarment and will advise the Consultant of the scheduled date for a debarment hearing before the Contractor Hearing Board.

e. The Contractor Hearing Board will conduct a hearing where evidence on the proposed debarment is presented. The Consultant and/or the Consultant's representative shall be given an opportunity to submit evidence at that hearing. After the hearing, the Contractor Hearing Board shall prepare a tentative proposed decision, which shall contain a recommendation regarding whether the Consultant should be debarred, and, if so, the appropriate length of time of the debarment. The Consultant and the Department shall be provided an opportunity to object to the tentative proposed decision prior to its presentation to the Board of Supervisors.

f. After consideration of any objections, or if no objections are submitted, a record of the hearing, the proposed decision and any other recommendation of the Contractor Hearing Board shall be presented to the Board of Supervisors. The Board of Supervisors shall have the right to modify, deny or adopt the proposed decision and recommendation of the Hearing Board.

g. If the Consultant has been debarred for a period longer than five years, that Consultant may, after the debarment has been in effect for at least five years, submit a written request for review of the debarment determination to reduce the period of debarment or terminate the debarment. The County may, in its discretion, reduce the period of debarment or terminate the debarment if it finds that the Consultant has adequately demonstrated one or more of the following: (1) elimination of the grounds for which the debarment was imposed; (2) a bona fide change in ownership or management; (3) material evidence discovered after debarment was imposed; or (4) any other reason that is in the best interests of the County.

h. The Contractor Hearing Board will consider a request for review of a debarment determination only where (1) the Consultant has been debarred for a period longer than five years; (2) the debarment has been in effect for at least five years; and (3) the request is in writing, states one or more of the grounds for reduction of the debarment period or termination of the debarment, and includes supporting documentation. Upon receiving an appropriate request, the Contractor Hearing Board will provide notice of the hearing on the request. At the hearing, the Contractor Hearing Board shall conduct a hearing where evidence on the proposed reduction of debarment period or termination of debarment is presented. This hearing shall be conducted and the request for review decided by the Contractor Hearing Board pursuant to the same procedures as for a debarment hearing.

The Contractor Hearing Board's proposed decision shall contain a recommendation on the request to reduce the period of debarment or terminate the debarment. The Contractor Hearing Board shall present its proposed decision and recommendation to the Board of Supervisors. The Board of Supervisors shall have the right to modify, deny, or adopt the proposed decision and recommendation of the Contractor Hearing Board.

i. These terms shall also apply to subconsultants of County Consultants.

31. Compliance with Jury Service Program

This Contract is subject to provisions of the County's ordinance entitled Contractor Employee Jury Service (Jury Service Program) as codified in Sections 2.203.010 through 2.203.090 of the Los Angeles County Code, incorporated by reference and made a part of this Agreement.

a. Unless Consultant has demonstrated to the County's satisfaction either that Consultant is not a Consultant as defined under the Jury Service Program (Section 2.203.020 of the County Code) or that Consultant qualifies for an exception to the Jury Service Program (Section 2.203.070 of the County Code), Consultant shall have and adhere to a written policy that provides that its Employees shall receive from the Consultant, on an annual basis, no less than five days of regular pay for actual jury service. The policy may provide that Employees deposit any fees received for such jury service with the Consultant or that the Consultant deduct from the Employee's regular pay the fees received for jury service.

b. For purposes of this Section, Consultant means a person, partnership, corporation or other entity which has a Contract with the County or a subcontract with a County Consultant and has received or will receive an aggregate sum of $50,000 or more in any 12-month period under one or more County Contracts or subcontracts. Employee means any California resident who is a full-time employee of Consultant.

Full-time means 40 hours or more worked per week, or a lesser number of hours if: 1) the lesser number is a recognized industry standard as determined by the County, or 2) Consultant has a long-standing practice that defines the lesser number of hours as full-time. Full-time employees providing short-term, temporary services of 90 days or less within a 12-month period are not considered full-time for purposes of the Jury Service Program. If Consultant uses any subconsultant to perform services for the County under the Contract, the subconsultant shall also be subject to the provisions of this Section. The provisions of this Section shall be inserted into any such subcontract Agreement and a copy of the Jury Service Program shall be attached to the Agreement.

c. If Consultant is not required to comply with the Jury Service Program when the Contract commences, Consultant shall have a continuing obligation to review the applicability of its exception status from the Jury Service Program, and Consultant shall immediately notify County if Consultant at any time either comes within the Jury Service Program's definition of Consultant or if Consultant no longer qualifies for an exception to the Program. In either event, Consultant shall immediately implement a written policy consistent with the Jury Service Program. The County may also require, at any time during the Agreement and at its sole discretion, that Consultant demonstrate to the County's satisfaction that Consultant either continues to remain outside the Jury Service Program's definition of Consultant and/or that Consultant continues to qualify for an exception to the Program.

d. Consultant's violation of this Section of the Agreement may constitute a material breach of the Agreement. In the event of such material breach, County may, in its sole discretion, terminate the Consultant and/or bar Consultant from the award of future County contracts for a period of time consistent with the seriousness of the breach.

32. <u>No Payment for Services Provided Following Expiration/Termination of Agreement</u>

Consultant shall have no claim against County for payment for any money or reimbursement, of any kind whatsoever, for any service provided by Consultant after the expiration or other termination of this Agreement. Should Consultant receive any such payment it shall immediately notify County and shall immediately repay all such funds to County. Payment by County for services rendered after expiration/termination of this Agreement shall not constitute a waiver of County's right to recover such payment from Consultant. This provision shall survive the expiration or other termination of this Agreement.

33. <u>Notice to Employees Regarding the Safely Surrendered Baby Law</u>

The Consultant shall notify and provide to its employees, and shall require each

subconsultant to notify and provide to its employees, a fact sheet regarding the Safely Surrendered Baby Law, its implementation in Los Angeles County, and how to safely surrender a baby. The fact sheet is available on the Internet at www.babysafela.org for printing purposes.

The Consultant acknowledges that the County places a high priority on the implementation of the Safely Surrendered Baby Law. The Consultant understands that it is the County's policy to encourage all County Consultants to voluntarily post the County's, A Safely Surrendered Baby Law poster, in a prominent position at the Consultant's place of business. The County's Department of Children and Family Services will supply the Consultant with the poster to be used.

34. Consultant Assignment

a. Consultant shall not assign its rights or delegate its duties under the Agreement, or both, whether in whole or in part, without the prior written consent of County, in its discretion, and any attempted assignment or delegation without such consent shall be null and void. For purposes of this paragraph, County consent shall require a written amendment to the Agreement, which is formally approved and executed by the parties. Any payments by County to any approved delegate or assignee on any claim under the Agreement shall be deductible, at County's sole discretion, against the claims which Consultant may have against County.

b. Shareholders, partners, members, or other equity holders of Consultant may transfer, sell, exchange, assign, or divest themselves of any interest they may have therein. However, in the event any such sale, transfer, exchange, assignment, or divestment is effected in such a way as to give majority control of Consultant to any person(s), corporation, partnership, or legal entity other than the majority controlling interest therein at the time of execution of the Agreement, such disposition is an assignment requiring the prior written consent of County in accordance with applicable provisions of this Agreement.

c. Any assumption, assignment, delegation, or takeover of any of the Consultant's duties, responsibilities, obligations, or performance of same by any entity other than the Consultant, whether through assignment, subcontract, delegation, merger, buyout, or any other mechanism, with or without consideration for any reason whatsoever without County's express prior written approval, shall be a material breach of the Agreement which may result in the termination of the Agreement. In the event of such termination, County shall be entitled to pursue the same remedies against Consultant as it could pursue in the event of default by Consultant.

35. Contractor's Warranty of Compliance with County's Defaulted Property Tax Reduction Program

Contractor acknowledges that County has established a goal of ensuring that all individuals and businesses that benefit financially from County through contract are current in paying their property tax obligations (secured and unsecured roll) in order to mitigate the economic burden otherwise imposed upon County and its taxpayers.

Unless contractor qualifies for an exemption or exclusion, contractor warrants and certifies that to the best of its knowledge it is now in compliance, and during the term of this contract will maintain compliance, with Los Angeles County Code Chapter. 2.206.

36. Termination for Breach of Warranty to Maintain Compliance with County's Defaulted Property Tax Reduction Program.

Failure of contractor to maintain compliance with the requirements set forth in "Contractor's Warranty of Compliance with County's Defaulted Property Tax Reduction Program" shall constitute default under this contract. Without limiting the rights and remedies available to County under any other provision of this contract, failure of contractor to cure such default within 10 days of notice shall be grounds upon which County may terminate this contract and/or pursue debarment of contractor, pursuant to County Code Chapter 2.206.

37. Time Off for Voting

The Contractor shall notify its employees, and shall require each subcontractor to notify and provide to its employees, information regarding the time off for voting law (Elections Code Section 14000). Not less than 10 days before every statewide election, every Contractor and subcontractors shall keep posted conspicuously at the place of work, if practicable, or elsewhere where it can be seen as employees come or go to their place of work, a notice setting forth the provisions of Section 14000.

38. Maintenance & Support

Refer to Exhibit G (attached).

39. Task/Deliverable Acceptance Certificate

Refer to Exhibit I (attached).

40. Relevant Software Agreement Definitions and Provisions

Refer to Exhibit J (attached).

41. Third Party Software

Refer to Exhibit K (attached).

42. Dispute Resolution Procedure

Contractor and County agree to act immediately to mutually resolve any disputes that may arise with respect to the Agreement. All such disputes shall be subject to the provisions described herein and collectively referred to as the "Dispute Resolution Procedures." The parties agree that time is of the essence in the resolution of disputes.

Contractor and County agree that the existence and details of a dispute notwithstanding, both parties shall continue without delay their performance hereunder, except for any performance, other than payment by County for approved work, that County, in its discretion, determines should be delayed as a result of such dispute.

If Contractor fails to continue without delay its performance hereunder that County, in its discretion, determines should not be delayed as a result of such dispute, then any additional costs which may be incurred by Contractor or County as a result of Contractor's failure to continue to so perform shall be borne by Contractor, and Contractor shall make no claim whatsoever against County for such costs. Contractor shall promptly reimburse County for such County costs, as determined by County, or County may deduct or offset all such additional costs from any amounts due to Contractor from County.

If County fails to continue without delay to perform its responsibilities under the Agreement which County, in its discretion, determines should not be delayed as a result of such dispute, then any additional costs incurred by Contractor or County as a result of County's failure to continue to so perform shall be borne by County, and County shall make no claim whatsoever against Contractor for such costs. County shall promptly reimburse Contractor for all such additional Contractor costs subject to the approval of such costs by County.

In the event of any dispute between the parties with respect to the Agreement, Contractor and County shall submit the matter to their respective Project Manager for the purpose of endeavoring to resolve such dispute.

If the Project Managers are unable to resolve the dispute within a reasonable time, not to exceed five (5) working days from the date of submission of the dispute, then the matter immediately shall be submitted to the parties' respective Project Directors for further consideration and discussion to attempt to resolve the dispute.

If the Project Directors are unable to resolve the dispute within a reasonable time not to exceed five (5) working days from the date of submission of the dispute, then the

matter shall be immediately submitted to the County's Assistant Deputy Director of the Water Resources Division and Contractor's Vice President. These persons shall have five (5) working days to attempt to resolve the dispute.

If the County's Assistant Deputy Director of the Water Resources Division and the Contractor's Vice President are unable to resolve the dispute within a reasonable time not to exceed five (5) working days from the date of submission of the dispute, then the matter shall be immediately submitted to Contractor's President and the Director, but not to Director's designee. These persons shall have five (5) working days to attempt to resolve the dispute.

In the event that at these levels, there is not a resolution of the dispute acceptable to both parties, then each party may assert its other rights and remedies provided under the Agreement and its rights and remedies as provided by law.

All disputes utilizing the Dispute Resolution Procedures shall be documented in writing by each party and shall state the specifics of each alleged dispute and all actions taken. The parties shall act in good faith to resolve all disputes. At all four (4) levels described in this Dispute Resolution Procedure, the efforts to resolve a dispute shall be undertaken by conference between the parties' respective representatives, either orally, by face-to-face meeting or by telephone, or in writing by exchange or correspondence.

43. Confidentiality

Contractor shall maintain the confidentiality of all records and information, proprietary information, software codes, trade secrets, confidential information, etc., whether of County or third parties, in accordance with all applicable Federal, State, and local laws, rules, regulations, ordinances, directives, guidelines, policies and procedures relating to confidentiality, including, without limitation, County policies concerning information technology security and the protection of confidential records and information.

Contractor shall not compromise, appropriate, nor misappropriate in any way any proprietary information, of County or of any third parties, related in any way to the project, including but not limited to all records, information, proprietary information, software codes, trade secrets, confidential information, etc.

Contractor shall indemnify, defend, and hold harmless County, its officers, employees, and agents, from and against any and all claims, demands, damages, liabilities, losses, costs and expenses, including, without limitation, defense costs and legal, accounting and other expert, consulting, or professional fees, arising from, connected with, or related to any failure by Contractor, its officers, employees, agents, or subcontractors, to comply with this paragraph, as determined by County in its sole judgment. Any legal defense pursuant to Contractor's indemnification obligations

under this paragraph shall be conducted by Contractor and performed by counsel selected by Contractor and approved by County. Notwithstanding the preceding sentence, County shall have the right to participate in any such defense at its sole cost and expense, except that in the event Contractor fails to provide County with a full and adequate defense, as determined by County in its sole judgment, County shall be entitled to retain its own counsel, including, without limitation, County Counsel, and reimbursement from Contractor for all such costs and expenses incurred by County in doing so. Contractor shall not have the right to enter into any settlement, agree to any injunction, or make any admission, in each case, on behalf of County without County's prior written approval.

Contractor shall inform all of its officers, employees, agents and subcontractors providing services hereunder of the confidentiality provisions of this Contract as indicated in the Attachment 4.

44. Subcontracting

44.1 The requirements of this Contract may not be subcontracted by the Contractor without the advance approval of the County. Any attempt by the Contractor to subcontract without the prior consent of the County may be deemed a material breach of this Contract.

44.2 If the Contractor desires to subcontract, the Contractor shall provide the following information promptly at the County's request.

- A description of the work to be performed by the Subcontractor;
- A draft copy of the proposed subcontract; and
- Other pertinent information and/or certifications requested by the County.

44.3 The Contractor shall indemnify and hold the County harmless with respect to the activities of each and every Subcontractor in the same manner and to the same degree as if such Subcontractor(s) were the Contractor employees.

44.4 The Contractor shall remain fully responsible for all performances required of it under this Contract, including those that the Contractor has determined to subcontract, notwithstanding the County’s approval of the Contractor's proposed subcontract.

44.5 The County's consent to subcontract shall not waive the County's right to prior and continuing approval of any and all personnel, including Subcontractor employees, providing services under this Contract. The Contractor is responsible to notify its Subcontractors of this County right.

44.6 The County's Project Manager is authorized to act for and on behalf of the County with respect to approval of any subcontract and Subcontractor employees. After approval of the subcontract by the County, Contractor shall forward a fully executed subcontract to the County for their files.

44.7 The Contractor shall be solely liable and responsible for all payments or other compensation to all Subcontractors and their officers, employees, agents, and successors in interest arising through services performed hereunder, notwithstanding the County's consent to subcontract.

44.8 The Contractor shall obtain certificates of insurance, which establish that the Subcontractor maintains all the programs of insurance required by the County from each approved Subcontractor. The Contractor shall ensure delivery of all such documents to:

Department of Public Works
Architectural Engineering Division
Contracts & Operations, 8th Floor
900 South Fremont Avenue
Alhambra, CA 91803

before any Subcontractor employee may perform any work hereunder.

45. Notices

Any notice required or desired to be given pursuant to this Agreement shall be given in writing and addressed as follows:

COUNTY	CONSULTANT
Department of Public Works Architectural Engineering Division Contracts & Operations, 8th Floor 900 South Fremont Avenue Alhambra, CA 91803 (626) 300-2325	Leed Electric, Inc. 13138 Arctic Circle Santa Fe Springs, CA 90670 (562) 270-9500

The address for notice may be changed by giving notice pursuant to this paragraph.

46. Compliance with Applicable Law

46.1 In the performance of this Contract, Contractor shall comply with all applicable Federal, State and local laws, rules, regulations, ordinances, directives, guidelines, policies and procedures, and all provisions required thereby to be included in this Contract are hereby incorporated herein by reference.

46.2 Contractor shall indemnify, defend, and hold harmless County, its officers, employees, and agents, from and against any and all claims, demands, damages, liabilities, losses, costs, and expenses, including, without limitation,

defense costs and legal, accounting and other expert, consulting or professional fees, arising from, connected with, or related to any failure by Contractor, its officers, employees, agents, or subcontractors, to comply with any such laws, rules, regulations, ordinances, directives, guidelines, policies, or procedures, as determined by County in its sole judgment. Any legal defense pursuant to Contractor's indemnification obligations under this Paragraph 46 shall be conducted by Contractor and performed by counsel selected by Contractor and approved by County. Notwithstanding the preceding sentence, County shall have the right to participate in any such defense at its sole cost and expense, except that in the event Contractor fails to provide County with a full and adequate defense, as determined by County in its sole judgment, County shall be entitled to retain its own counsel, including, without limitation, County Counsel, and reimbursement from Contractor for all such costs and expenses incurred by County in doing so. Contractor shall not have the right to enter into any settlement, agree to any injunction or other equitable relief, or make any admission, in each case, on behalf of County without County's prior written approval.

47. Damage to County Facilities, Buildings or Grounds

47.1 The Contractor shall repair, or cause to be repaired, at its own cost, any and all damage to County facilities, buildings, or grounds caused by the Contractor or employees or agents of the Contractor. Such repairs shall be made immediately after the Contractor has become aware of such damage, but in no event later than thirty (30) days after the occurrence.

47.2 If the Contractor fails to make timely repairs, County may make any necessary repairs. All costs incurred by County, as determined by County, for such repairs shall be repaid by the Contractor by cash payment upon demand.

48. Force Majeure

48.1 Neither party shall be liable for such party's failure to perform its obligations under and in accordance with this Contract, if such failure arises out of fires, floods, epidemics, quarantine restrictions, other natural occurrences, strikes, lockouts (other than a lockout by such party or any of such party's subcontractors), freight embargoes, or other similar events to those described above, but in every such case the failure to perform must be totally beyond the control and without any fault or negligence of such party (such events are referred to in this sub-paragraph as "force majeure events").

48.2 Notwithstanding the foregoing, a default by a subcontractor of Contractor shall not constitute a force majeure event, unless such default arises out of causes beyond the control of both Contractor and such subcontractor, and without any fault or negligence of either of them. In such case, Contractor shall not be liable for failure to perform, unless the goods or services to be furnished by the subcontractor were obtainable from other sources in sufficient time to permit

Contractor to meet the required performance schedule. As used in this sub-paragraph, the term "subcontractor" and "subcontractors" mean subcontractors at any tier.

48.3 In the event Contractor's failure to perform arises out of a force majeure event, Contractor agrees to use commercially reasonable best efforts to obtain goods or services from other sources, if applicable, and to otherwise mitigate the damages and reduce the delay caused by such force majeure event.

49. Local Small Business Enterprise (SBE) Preference Program

49.1 This Contract is subject to the provisions of the County's ordinance entitled Local Small Business Enterprise Preference Program, as codified in Chapter 2.204 of the Los Angeles County Code.

49.2 The Contractor shall not knowingly and with the intent to defraud, fraudulently obtain, retain, attempt to obtain or retain, or aid another in fraudulently obtaining or retaining or attempting to obtain or retain certification as a Local Small Business Enterprise.

49.3 The Contractor shall not willfully and knowingly make a false statement with the intent to defraud, whether by affidavit, report, or other representation, to a County official or employee for the purpose of influencing the certification or denial of certification of any entity as a Local Small Business Enterprise.

49.4 If the Contractor has obtained certification as a Local Small Business Enterprise by reason of having furnished incorrect supporting information or by reason of having withheld information, and which knew, or should have known, the information furnished was incorrect or the information withheld was relevant to its request for certification, and which by reason of such certification has been awarded this contract to which it would not otherwise have been entitled, shall:

1. Pay to the County any difference between the contract amount and what the County's costs would have been if the contract had been properly awarded;

2. In addition to the amount described in subdivision (1), be assessed a penalty in an amount of not more than 10 percent of the amount of the contract; and

3. Be subject to the provisions of Chapter 2.202 of the Los Angeles County Code (Determinations of Contractor Non-responsibility and Contractor Debarment).

The above penalties shall also apply to any business that has previously obtained proper certification, however, as a result of a change in their status would no longer be eligible for certification, and fails to notify the state and

Internal Services Department of this information prior to responding to a solicitation or accepting a contract award.

50. Liquidated Damages

50.1 If, in the judgment of the Department Head, or his/her designee, the Contractor is deemed to be non-compliant with the terms and obligations assumed hereby, the Department Head, or his/her designee, at his/her option, in addition to, or in lieu of, other remedies provided herein, may withhold the entire monthly payment or deduct pro rata from the Contractor's invoice for work not performed. A description of the work not performed and the amount to be withheld or deducted from payments to the Contractor from the County, will be forwarded to the Contractor by the Department Head, or his/her designee, in a written notice describing the reasons for said action.

50.2 If the Department Head, or his/her designee, determines that there are deficiencies in the performance of this Contract that the Department Head, or his/her designee, deems are correctable by the Contractor over a certain time span, the Department Head, or his/her designee, will provide a written notice to the Contractor to correct the deficiency within specified time frames. Should the Contractor fail to correct deficiencies within said time frame, the Department Head, or his/her designee, may: (a) Deduct from the Contractor's payment, pro rata, those applicable portions of the Monthly Contract Sum; and/or (b) Deduct liquidated damages. The parties agree that it will be impracticable or extremely difficult to fix the extent of actual damages resulting from the failure of the Contractor to correct a deficiency within the specified time frame. The parties hereby agree that under the current circumstances a reasonable estimate of such damages is One Hundred Dollars ($100) per day per infraction, and that the Contractor shall be liable to the County for liquidated damages in said amount. Said amount shall be deducted from the County's payment to the Contractor; and/or (c) Upon giving five (5) days notice to the Contractor for failure to correct the deficiencies, the County may correct any and all deficiencies and the total costs incurred by the County for completion of the work by an alternate source, whether it be County forces or separate private contractor, will be deducted and forfeited from the payment to the Contractor from the County, as determined by the County.

50.3 The action noted in sub-paragraph 50 shall not be construed as a penalty, but as adjustment of payment to the Contractor to recover the County cost due to the failure of the Contractor to complete or comply with the provisions of this Contract.

50.4 This sub-paragraph shall not, in any manner, restrict or limit the County's right to damages for any breach of this Contract provided by law or as specified in sub-paragraph 50.2, and shall not, in any manner, restrict or limit the County's right to terminate this Contract as agreed to herein.

51. Most Favored Public Entity

If the Contractor's prices decline, or should the Contractor at any time during the term of this Contract provide the same goods or services under similar quantity and delivery conditions to the State of California or any county, municipality, or district of the State at prices below those set forth in this Contract, then such lower prices shall be immediately extended to the County.

52. Nondiscrimination and Affirmative Action

52.1 The Contractor certifies and agrees that all persons employed by it, its affiliates, subsidiaries, or holding companies are and shall be treated equally without regard to or because of race, color, religion, ancestry, national origin, sex, age, physical or mental disability, marital status, or political affiliation, in compliance with all applicable Federal and State anti-discrimination laws and regulations.

52.2 The Contractor shall certify to, and comply with, the provisions of Contractor's EEO Certification.

52.3 The Contractor shall take affirmative action to ensure that applicants are employed, and that employees are treated during employment, without regard to race, color, religion, ancestry, national origin, sex, age, physical or mental disability, marital status, or political affiliation, in compliance with all applicable Federal and State anti-discrimination laws and regulations. Such action shall include, but is not limited to: employment, upgrading, demotion, transfer, recruitment or recruitment advertising, layoff or termination, rates of pay or other forms of compensation, and selection for training, including apprenticeship.

52.4 The Contractor certifies and agrees that it will deal with its subcontractors, bidders, or vendors without regard to or because of race, color, religion, ancestry, national origin, sex, age, physical or mental disability, marital status, or political affiliation.

52.5 The Contractor certifies and agrees that it, its affiliates, subsidiaries, or holding companies shall comply with all applicable Federal and State laws and regulations to the end that no person shall, on the grounds of race, color, religion, ancestry, national origin, sex, age, physical or mental disability, marital status, or political affiliation, be excluded from participation in, be denied the benefits of, or be otherwise subjected to discrimination under this Contract or under any project, program, or activity supported by this Contract.

52.6 The Contractor shall allow County representatives access to the Contractor's employment records during regular business hours to verify compliance with the provisions of this sub-paragraph 52 when so requested by the County.

52.7 If the County finds that any provisions of this sub-paragraph 52 have been violated, such violation shall constitute a material breach of this Contract upon which the County may terminate or suspend this Contract. While the County reserves the right to determine independently that the anti-discrimination provisions of this Contract have been violated, in addition, a determination by the California Fair Employment and Housing Commission or the Federal Equal Employment Opportunity Commission that the Contractor has violated Federal or State anti-discrimination laws or regulations shall constitute a finding by the County that the Contractor has violated the anti-discrimination provisions of this Contract.

52.8 The parties agree that in the event the Contractor violates any of the anti-discrimination provisions of this Contract, the County shall, at its sole option, be entitled to the sum of Five Hundred Dollars ($500) for each such violation pursuant to California Civil Code Section 1671 as liquidated damages in lieu of terminating or suspending this Contract.

53. Non Exclusivity

Nothing herein is intended nor shall be construed as creating any exclusive arrangement with the Contractor. This Contract shall not restrict Department from acquiring similar, equal or like goods and/or services from other entities or sources.

54. Notice of Delays

Except as otherwise provided under this Contract, when either party has knowledge that any actual or potential situation is delaying or threatens to delay the timely performance of this Contract, that party shall, within one (1) business day, give notice thereof, including all relevant information with respect thereto, to the other party.

55. Public Records Act

55.1 Any documents submitted by the Contractor; all information obtained in connection with the County's right to audit and inspect the Contractor's documents, books, and accounting records pursuant to sub-paragraph 58-Record Retention and Inspection/Audit Settlement of this Contract; as well as those documents which were required to be submitted in response to the Request for Proposals (RFP) used in the solicitation process for this Contract, become the exclusive property of the County. All such documents become a matter of public record and shall be regarded as public records. Exceptions will be those elements in the California Government Code Section 6250 et seq. (Public Records Act) and which are marked "trade secret," "confidential," or "proprietary." The County shall not in any way be liable or responsible for the disclosure of any such records including, without limitation, those so marked, if disclosure is required by law, or by an order issued by a court of competent jurisdiction.

55.2 In the event the County is required to defend an action on a Public Records Act request for any of the aforementioned documents, information, books, records, and/or contents of a proposal marked "trade secret," "confidential," or "proprietary," the Contractor agrees to defend and indemnify the County from all costs and expenses, including reasonable attorney's fees, in action or liability arising under the Public Records Act.

56. Prohibition Against Inducement or Persuasion

Notwithstanding the above, the Contractor and the County agree that, during the term of this Contract and for a period of one year thereafter, neither party shall in any way intentionally induce or persuade any employee of one party to become an employee or agent of the other party. No bar exists against any hiring action initiated through a public announcement.

57. Publicity

57.1 The Contractor shall not disclose any details in connection with this Contract to any person or entity except as may be otherwise provided hereunder or required by law. However, in recognizing the Contractor's need to identify its services and related clients to sustain itself, the County shall not inhibit the Contractor from publishing its role under this Contract within the following conditions:

i. The Contractor shall develop all publicity material in a professional manner; and
ii. During the term of this Contract, the Contractor shall not, and shall not authorize another to, publish or disseminate any commercial advertisements, press releases, feature articles, or other materials using the name of the County without the prior written consent of the County's Project Director. The County shall not unreasonably withhold written consent.

57.2 The Contractor may, without the prior written consent of County, indicate in its proposals and sales materials that it has been awarded this Contract with the County of Los Angeles, provided that the requirements of this sub-paragraph 57 shall apply.

58. Record Retention and Inspection/Audit Settlement

The Contractor shall maintain accurate and complete financial records of its activities and operations relating to this Contract in accordance with generally accepted accounting principles. The Contractor shall also maintain accurate and complete employment and other records relating to its performance of this Contract. The Contractor agrees that the County, or its authorized representatives, shall have access to and the right to examine, audit, excerpt, copy, or transcribe any pertinent transaction, activity, or record relating to this Contract. All such material, including, but not limited to, all financial records, bank statements, cancelled checks or other proof of payment, timecards, sign-in/sign-out sheets and other time and employment records,

and proprietary data and information, shall be kept and maintained by the Contractor and shall be made available to the County during the term of this Contract and for a period of five (5) years thereafter unless the County's written permission is given to dispose of any such material prior to such time. All such material shall be maintained by the Contractor at a location in Los Angeles County, provided that if any such material is located outside Los Angeles County, then, at the County's option, the Contractor shall pay the County for travel, per diem, and other costs incurred by the County to examine, audit, excerpt, copy, or transcribe such material at such other location.

58.1 In the event that an audit of the Contractor is conducted specifically regarding this Contract by any Federal or State auditor, or by any auditor or accountant employed by the Contractor or otherwise, then the Contractor shall file a copy of such audit report with the County's Auditor-Controller within thirty (30) days of the Contractor's receipt thereof, unless otherwise provided by applicable Federal or State law or under this Contract. Subject to applicable law, the County shall make a reasonable effort to maintain the confidentiality of such audit report(s).

58.2 Failure on the part of the Contractor to comply with any of the provisions of this sub-paragraph 58 shall constitute a material breach of this Contract upon which the County may terminate or suspend this Contract.

58.3 If, at any time during the term of this Contract or within five (5) years after the expiration or termination of this Contract, representatives of the County conduct an audit of the Contractor regarding the work performed under this Contract, and if such audit finds that the County's dollar liability for any such work is less than payments made by the County to the Contractor, then the difference shall be either: a) repaid by the Contractor to the County by cash payment upon demand or b) at the sole option of the County's Auditor-Controller, deducted from any amounts due to the Contractor from the County, whether under this Contract or otherwise. If such audit finds that the County's dollar liability for such work is more than the payments made by the County to the Contractor, then the difference shall be paid to the Contractor by the County by cash payment, provided that in no event shall the County's maximum obligation for this Contract exceed the funds appropriated by the County for the purpose of this Contract.

59. Termination for Convenience

59.1 This Contract may be terminated, in whole or in part, when such action is deemed by the County, in its sole discretion, to be in its best interest. Termination of work hereunder shall be effected by notice of termination to the Contractor specifying the extent to which performance of work is terminated and the date upon which such termination becomes effective. The date upon which such termination becomes effective shall be no less than three (3) days after the notice is sent.

59.2 After receipt of a notice of termination and except as otherwise directed by the County, the Contractor shall 1) stop work under this Contract on the date and to the extent specified in such notice, and 2) complete performance of such part of the work as shall not have been terminated by such notice.

59.3 All material including books, records, documents, or other evidence bearing on the costs and expenses of the Contractor under this Contract shall be maintained by the Contractor in accordance with sub-paragraph 58, Record Retention and Inspection/Audit Settlement.

59.4 County shall not incur any liability to County, other than payment for work already performed, up to the date of termination.

60. Termination for Default

60.1 The County may, by written notice to the Contractor, terminate the whole or any part of this Contract, if, in the judgment of County's Project Director:

- Contractor has materially breached this Contract; or
- Contractor fails to timely provide and/or satisfactorily perform any task, deliverable, service, or other work required either under this Contract; or
- Contractor fails to demonstrate a high probability of timely fulfillment of performance requirements under this Contract, or of any obligations of this Contract and in either case, fails to demonstrate convincing progress toward a cure within five (5) working days (or such longer period as the County may authorize in writing) after receipt of written notice from the County specifying such failure.

60.2 In the event that the County terminates this Contract in whole or in part as provided in sub-paragraph 60, the County may procure, upon such terms and in such manner as the County may deem appropriate, goods and services similar to those so terminated. The Contractor shall be liable to the County for any and all excess costs incurred by the County, as determined by the County, for such similar goods and services. The Contractor shall continue the performance of this Contract to the extent not terminated under the provisions of this sub-paragraph.

60.3 Except with respect to defaults of any Subcontractor, the Contractor shall not be liable for any such excess costs of the type identified in sub-paragraph 60.2 if its failure to perform this Contract arises out of causes beyond the control and without the fault or negligence of the Contractor. Such causes may include, but are not limited to: acts of God or of the public enemy, acts of the County in either its sovereign or contractual capacity, acts of Federal or State governments in their sovereign capacities, fires, floods, epidemics, quarantine restrictions, strikes, freight embargoes, and unusually severe weather; but in every case, the failure to perform must be beyond the control and without the fault or negligence of the Contractor. If the failure to perform is caused by the default of a

Subcontractor, and if such default arises out of causes beyond the control of both the Contractor and Subcontractor, and without the fault or negligence of either of them, the Contractor shall not be liable for any such excess costs for failure to perform, unless the goods or services to be furnished by the Subcontractor were obtainable from other sources in sufficient time to permit the Contractor to meet the required performance schedule. As used in this sub-paragraph, the term "Subcontractor(s)" means Subcontractor(s) at any tier.

60.4 If, after the County has given notice of termination under the provisions of this sub-paragraph 60, it is determined by the County that the Contractor was not in default under the provisions of this sub-paragraph 60, or that the default was excusable under the provisions of sub-paragraph 60.3, the rights and obligations of the parties shall be the same as if the notice of termination had been issued pursuant to sub-paragraph 59 - Termination for Convenience.

60.5 The rights and remedies of the County provided in this sub-paragraph 60 shall not be exclusive and are in addition to any other rights and remedies provided by law or under this Contract.

61. Termination for Insolvency

61.1 The County may terminate this Contract forthwith in the event of the occurrence of any of the following: 1) Insolvency of the Contractor. The Contractor shall be deemed to be insolvent if it has ceased to pay its debts for at least sixty (60) days in the ordinary course of business or cannot pay its debts as they become due, whether or not a petition has been filed under the Federal Bankruptcy Code and whether or not the Contractor is insolvent within the meaning of the Federal Bankruptcy Code; 2) The filing of a voluntary or involuntary petition regarding the Contractor under the Federal Bankruptcy Code; 3) The appointment of a Receiver or Trustee for the Contractor; or 4) The execution by the Contractor of a general assignment for the benefit of creditors.

61.2 The rights and remedies of the County provided in this sub-paragraph 61 shall not be exclusive and are in addition to any other rights and remedies provided by law or under this Contract.

62. Termination for Non-Appropriation of Funds

Notwithstanding any other provision of this Contract, the County shall not be obligated for the Contractor's performance hereunder or by any provision of this Contract during any of the County's future fiscal years unless and until the County’s Board of Supervisors appropriates funds for this Contract in the County’s Budget for each such future fiscal year. In the event that funds are not appropriated for this Contract, then this Contract shall terminate as of June 30 of the last fiscal year for which funds were appropriated. The County shall notify the Contractor in writing of any such non-allocation of funds at the earliest possible date.

63. Validity

If any provision of this Contract or the application thereof to any person or circumstance is held invalid, the remainder of this Contract and the application of such provision to other persons or circumstances shall not be affected thereby.

64. Waiver

No waiver by the County of any breach of any provision of this Contract shall constitute a waiver of any other breach or of such provision. Failure of the County to enforce at any time, or from time to time, any provision of this Contract shall not be construed as a waiver thereof. The rights and remedies set forth in this sub-paragraph 64 shall not be exclusive and are in addition to any other rights and remedies provided by law or under this Contract.

65. Warranty Against Contingent Fees

65.1 The Contractor warrants that no person or selling agency has been employed or retained to solicit or secure this Contract upon any Contract or understanding for a commission, percentage, brokerage, or contingent fee, excepting bona fide employees or bona fide established commercial or selling agencies maintained by the Contractor for the purpose of securing business.

65.2 For breach of this warranty, the County shall have the right to terminate this Contract and, at its sole discretion, deduct from the Contract price or consideration, or otherwise recover, the full amount of such commission, percentage, brokerage, or contingent fee.

66. Transitional Job Opportunities Preference Program

66.1 This Contract is subject to the provisions of the County's ordinance entitles Transitional Job Opportunities Preference Program, as codified in Chapter 2.205 of the Los Angeles County Code.

66.2 Contractor shall not knowingly and with the intent to defraud, fraudulently obtain, retain, attempt to obtain or retain, or aid another in fraudulently obtaining or retaining or attempting to obtain or retain certification as a Transitional Job Opportunity vendor.

66.3 Contractor shall not willfully and knowingly make a false statement with the intent to defraud, whether by affidavit, report, or other representation, to a County official or employee for the purpose of influencing the certification or denial of certification of any entity as a Transitional Job Opportunity vendor.

66.4 If Contractor has obtained County certification as a Transitional Job Opportunity vendor by reason of having furnished incorrect supporting information or by reason of having withheld information, and which knew, or should have known, the information furnished was incorrect or the information withheld was relevant

to its request for certification, and which by reason of such certification has been awarded this contract to which it would not otherwise have been entitled, shall:

1. Pay to the County any difference between the contract amount and what the County's costs would have been if the contract had been properly awarded;

2. In addition to the amount described in subdivision (1), be assessed a penalty in an amount of not more than 10 percent (10%) of the amount of the contract; and

3. Be subject to the provisions of Chapter 2.202 of the Los Angeles County Code (Determinations of Contractor Non-responsibility and Contractor Debarment).

The above penalties shall also apply to any entity that has previously obtained proper certification, however, as a result of a change in their status would no longer be eligible for certification, and fails to notify the certifying department of this information prior to responding to a solicitation or accepting a contract award.

67. Disabled Veteran Business Enterprise Preference Program

67.1 This Contract is subject to the provisions of the County's ordinance entitled Disabled Veteran Business Enterprise Preference Program, as codified in Chapter 2.211 of the Los Angeles County Code.

67.2 Contractor shall not knowingly and with the intent to defraud, fraudulently obtain, retain, attempt to obtain or retain, or aid another in fraudulently obtaining or retaining or attempting to obtain or retain certification as a Disabled Veteran Business Enterprise.

67.3 Contractor shall not willfully and knowingly make a false statement with the intent to defraud, whether by affidavit, report, or other representation, to a County official or employee for the purpose of influencing the certification or denial of certification of any entity as a Disabled Veteran Business Enterprise.

67.4 If Contractor has obtained certification as a Disabled Veteran Business Enterprise by reason of having furnished incorrect supporting information or by reason of having withheld information, and which knew, or should have known, the information furnished was incorrect or the information withheld was relevant to its request for certification, and which by reason of such certification has been awarded this contract to which it would not otherwise have been entitled, shall:

1. Pay to the County any difference between the contract amount and what the County’s costs would have been if the contract had been properly awarded;

2. In addition to the amount described in subdivision (1), be assessed a penalty in an amount of not more than 10 percent of the amount of the contract; and

3. Be subject to the provisions of Chapter 2.202 of the Los Angeles County Code (Determinations of Contractor Non-responsibility and Contractor Debarment).

The above penalties shall also apply to any business that has previously obtained proper certification, however, as a result of a change in their status would no longer be eligible for certification, and fails to notify the state and ISD of this information prior to responding to a solicitation or accepting a contract award.

68. Mental Health Services for Critical Incidents

In the event of a serious accident on the Project site, the Los Angeles County Department of Mental Health (DMH) will, if requested, respond. The response may be within a few hours or as long as a few days after the incident, depending on when the request was made. The services DMH will provide include crisis intervention, normalization of the stress response that survivors may be experiencing, stress management techniques and resources if the stress reactions increase in frequency or intensity. Requests for services may be made by calling the DMH Emergency Outreach Bureau Deputy Director, (213) 738-4924, during normal business hours or the ACCESS Center, (800) 854-7771, evenings, holidays, and weekends.

69. Entire Agreement

This Contract constitutes the entire Agreement between County and Consultant and may be modified only by further written Agreement between the parties hereto.

/
/
/
/
/
/
/
/
/
/
/
/
/
/
/
/

IN WITNESS WHEREOF, the County has, by order of its Board of Supervisors, caused these presents to be subscribed by the Director of the Department of Public Works, and the Consultant has hereunto subscribed its corporate name and affixed its corporate seal by its duly authorized officers the day, month, and year herein first above written.

COUNTY OF LOS ANGELES

By_____
Deputy Director
Department of Public Works

APPROVED AS TO FORM:

MARY C. WICKHAM
County Counsel

By_____
Deputy

LEED ELECTRIC, INC.

By_____
President

By_____
Secretary

ACKNOWLEDGMENT

A notary public or other officer completing this certificate verifies only the identity of the individual who signed the document to which this certificate is attached, and not the truthfulness, accuracy, or validity of that document.

State of California
County of _____)

On _____ before me, _____
(insert name and title of the officer)

personally appeared _____,
who proved to me on the basis of satisfactory evidence to be the person(s) whose name(s) is/are subscribed to the within instrument and acknowledged to me that he/she/they executed the same in his/her/their authorized capacity(ies), and that by his/her/their signature(s) on the instrument the person(s), or the entity upon behalf of which the person(s) acted, executed the instrument.

I certify under PENALTY OF PERJURY under the laws of the State of California that the foregoing paragraph is true and correct.

WITNESS my hand and official seal.

Signature _____ **(Seal)**

ACKNOWLEDGMENT

A notary public or other officer completing this certificate verifies only the identity of the individual who signed the document to which this certificate is attached, and not the truthfulness, accuracy, or validity of that document.

State of California
County of _____)

On _____ before me, _____
(insert name and title of the officer)

personally appeared _____,
who proved to me on the basis of satisfactory evidence to be the person(s) whose name(s) is/are subscribed to the within instrument and acknowledged to me that he/she/they executed the same in his/her/their authorized capacity(ies), and that by his/her/their signature(s) on the instrument the person(s), or the entity upon behalf of which the person(s) acted, executed the instrument.

I certify under PENALTY OF PERJURY under the laws of the State of California that the foregoing paragraph is true and correct.

WITNESS my hand and official seal.

Signature _____ **(Seal)**

June 14, 2016

ATTACHMENT

WEST COAST BASIN BARRIER PROJECT TELEMETRY SYSTEM PHASE 2B
LEED ELECTRIC, INC.

The services to be rendered by the Consultant shall include all services as described in the County's Request for Proposals dated January 21, 2016, and in the Consultant's proposal dated February 22, 2016 (attached), except to the extent they are inconsistent with this attachment and the terms of this Agreement, and shall consist of all such services as are customarily rendered when providing professional services of this type:

SCOPE OF SERVICES

Consultant shall provide all necessary labor, materials, and equipment for the installation and implementation of the West Coast Basin Barrier Project Telemetry System Phase 2B which will extend the existing seawater barrier telemetry system and will enable the County of Los Angeles Department of Public Works to remotely collect, store, analyze, and present status information on operational conditions at facilities associated with the West Coast Basin Barrier Project.

DELIVERABLES

Deliverables shall be as outlined and listed in the Exhibit A, Scope of Work.

SCHEDULE OF SERVICES

The Consultant will be given a Notice to Proceed by Public Works prior to commencement of services. The term of this Agreement shall commence upon the execution by both parties, and unless otherwise modified, shall terminate one year after the final acceptance date by Public Works.

COMPENSATION

Compensation for these services shall be for a not to exceed fee of $769,421.65. This amount includes $69,947.42 as a contingency fund for unforeseen, additional work directly related to the scope of work. The Consultant shall be compensated based on a schedule of payments and on milestone completion and approval by the County. Public Works will reimburse the Consultant for additional copies of reports and any other written requests outside the Scope of Services. Mileage is not reimbursable. Additional work shall not be performed without written authorization from the County. The

Consultant agrees that should work be performed outside the Scope of Work and without Public Works' prior written approval, such work shall be deemed a gratuitous effort by the Consultant, and the Consultant shall have no claim, therefore, against the County.

Payment for consultant services performed shall include a ten percent retention. Payment requests equal to ninety percent of consultant services performed during the previous 30 days or since the last payment request shall be submitted by the Consultant to the County for payment. A payment request for the ten percent withheld from the monthly payments shall be submitted by the Consultant upon completion and acceptance by the County of all consultant services performed under the original Contract.

Invoices shall include a breakdown of work completed and all authorized reimbursable expenses incurred with detailed backup documentation.

Attach.

ATTACHMENT 2

INDEMNIFICATION AND INSURANCE PROVISIONS

I. INDEMNIFICATION

The Contractor shall indemnify, defend and hold harmless the County, its Special Districts, elected and appointed officers, employees, agents and volunteers ("County Indemnitees") from and against any and all liability, including but not limited to demands, claims, actions, fees, costs and expenses (including attorney and expert witness fees), arising from and/or relating to this Contract, except for such loss or damage arising from the sole negligence or willful misconduct of the County Indemnitees.

II. GENERAL PROVISIONS FOR ALL INSURANCE COVERAGE

Without limiting Contractor's indemnification of County, and in the performance of this Contract and until all of its obligations pursuant to this Contract have been met, Contractor shall provide and maintain at its own expense insurance coverage satisfying the requirements specified in Sections 8.24 and 8.25 of this Contract. These minimum insurance coverage terms, types and limits (the "Required Insurance") also are in addition to and separate from any other contractual obligation imposed upon Contractor pursuant to this Contract. The County in no way warrants that the Required Insurance is sufficient to protect the Contractor for liabilities which may arise from or relate to this Contract.

A. Evidence of Coverage and Notice to County

- Certificate(s) of insurance coverage (Certificate) satisfactory to County, and a copy of an Additional Insured endorsement confirming County and its Agents (defined below) has been given Insured status under the Contractor's General Liability policy, shall be delivered to County at the address shown below and provided prior to commencing services under this Contract.

- Renewal Certificates shall be provided to County not less than 10 days prior to Contractor's policy expiration dates. The County reserves the right to obtain complete, certified copies of any required Contractor and/or Sub-Contractor insurance policies at any time.

- Certificates shall identify all Required Insurance coverage types and limits specified herein, reference this Contract by name or number, and be signed by an authorized representative of the insurer(s). The Insured party named on the Certificate shall match the name of the Contractor identified as the contracting party in this Contract. Certificates shall provide the full name of each insurer providing coverage, its NAIC (National Association of Insurance Commissioners) identification number, its financial rating, the amounts of any policy deductibles or

self-insured retentions exceeding fifty thousand ($50,000.00) dollars, and list any County required endorsement forms.

- Neither the County's failure to obtain, nor the County's receipt of, or failure to object to a non-complying insurance certificate or endorsement, or any other insurance documentation or information provided by the Contractor, its insurance broker(s) and/or insurer(s), shall be construed as a waiver of any of the Required Insurance provisions.

Certificates and copies of any required endorsements shall be sent to:

County of Los Angeles
Architectural Engineering Division
Contracting Section
Attention: Contract Administrator

Contractor also shall promptly report to County any injury or property damage accident or incident, including any injury to a Contractor employee occurring on County property, and any loss, disappearance, destruction, misuse, or theft of County property, monies or securities entrusted to Contractor. Contractor also shall promptly notify County of any third party claim or suit filed against Contractor or any of its Sub-Contractors which arises from or relates to this Contract, and could result in the filing of a claim or lawsuit against Contractor and/or County.

B. Additional Insured Status and Scope of Coverage

The County of Los Angeles, its Special Districts, Elected Officials, Officers, Agents, Employees and Volunteers (collectively County and its Agents) shall be provided additional insured status under Contractor's General Liability policy with respect to liability arising out of Contractor's ongoing and completed operations performed on behalf of the County. County and its Agents additional insured status shall apply with respect to liability and defense of suits arising out of the Contractor's acts or omissions, whether such liability is attributable to the Contractor or to the County. The full policy limits and scope of protection also shall apply to the County and its Agents as an additional insured, even if they exceed the County's minimum Required Insurance specifications herein. Use of an automatic additional insured endorsement form is acceptable providing it satisfies the Required Insurance provisions herein.

C. Cancellation of or Changes in Insurance

Contractor shall provide County with, or Contractor's insurance policies shall contain a provision that County shall receive, written notice of cancellation or any change in Required Insurance, including insurer, limits of coverage, term of coverage or policy period. The written notice shall be provided to County at least ten (10) days in advance of cancellation for non-payment of premium and thirty (30) days in advance for any other cancellation or policy change. Failure to provide written notice of cancellation or any change in Required Insurance may constitute a material breach of the Contract,

in the sole discretion of the County, upon which the County may suspend or terminate this Contract.

D. Failure to Maintain Insurance

Contractor's failure to maintain or to provide acceptable evidence that it maintains the Required Insurance shall constitute a material breach of the Contract, upon which County immediately may withhold payments due to Contractor, and/or suspend or terminate this Contract. County, at its sole discretion, may obtain damages from Contractor resulting from said breach. Alternatively, the County may purchase the Required Insurance, and without further notice to Contractor, deduct the premium cost from sums due to Contractor or pursue Contractor reimbursement.

E. Insurer Financial Ratings

Coverage shall be placed with insurers acceptable to the County with A.M. Best ratings of not less than A:VII unless otherwise approved by County.

F. Contractor's Insurance Shall Be Primary

Contractor's insurance policies, with respect to any claims related to this Contract, shall be primary with respect to all other sources of coverage available to Contractor. Any County maintained insurance or self-insurance coverage shall be in excess of and not contribute to any Contractor coverage.

G. Waivers of Subrogation

To the fullest extent permitted by law, the Contractor hereby waives its rights and its insurer(s)' rights of recovery against County under all the Required Insurance for any loss arising from or relating to this Contract. The Contractor shall require its insurers to execute any waiver of subrogation endorsements which may be necessary to effect such waiver.

H. Sub-Contractor Insurance Coverage Requirements

Contractor shall include all Sub-Contractors as insureds under Contractor's own policies, or shall provide County with each Sub-Contractor's separate evidence of insurance coverage. Contractor shall be responsible for verifying each Sub-Contractor complies with the Required Insurance provisions herein, and shall require that each Sub-Contractor name the County and Contractor as additional insureds on the Sub-Contractor's General Liability policy. Contractor shall obtain County's prior review and approval of any Sub-Contractor request for modification of the Required Insurance.

I. Deductibles and Self-Insured Retentions (SIRs)

Contractor's policies shall not obligate the County to pay any portion of any Contractor deductible or SIR. The County retains the right to require Contractor to reduce or eliminate policy deductibles and SIRs as respects the County, or to provide a

bond guaranteeing Contractor's payment of all deductibles and SIRs, including all related claims investigation, administration and defense expenses. Such bond shall be executed by a corporate surety licensed to transact business in the State of California.

J. Claims Made Coverage

If any part of the Required Insurance is written on a claims made basis, any policy retroactive date shall precede the effective date of this Contract. Contractor understands and agrees it shall maintain such coverage for a period of not less than three (3) years following Contract expiration, termination or cancellation.

K. Application of Excess Liability Coverage

Contractors may use a combination of primary, and excess insurance policies which provide coverage as broad as the underlying primary policies, to satisfy the Required Insurance provisions.

L. Separation of Insureds

All liability policies shall provide cross-liability coverage as would be afforded by the standard ISO (Insurance Services Office, Inc.) separation of insureds provision with no insured versus insured exclusions or limitations.

M. Alternative Risk Financing Programs

The County reserves the right to review, and then approve, Contractor use of self-insurance, risk retention groups, risk purchasing groups, pooling arrangements and captive insurance to satisfy the Required Insurance provisions. The County and its Agents shall be designated as an Additional Covered Party under any approved program.

N. County Review and Approval of Insurance Requirements

The County reserves the right to review and adjust the Required Insurance provisions, conditioned upon County's determination of changes in risk exposures.

III. INSURANCE COVERAGE

A. Commercial General Liability insurance (providing scope of coverage equivalent to ISO policy form CG 00 01), naming County and its Agents as an additional insured, with limits of not less than:

General Aggregate:	$2 million
Products/Completed Operations Aggregate:	$1 million
Personal and Advertising Injury:	$1 million
Each Occurrence:	$1 million

B. Automobile Liability insurance (providing scope of coverage equivalent to ISO policy form CA 00 01) with limits of not less than $1 million for bodily injury and property damage, in combined or equivalent split limits, for each single accident. Insurance shall cover liability arising out of Contractor's use of autos pursuant to this Contract, including owned, leased, hired, and/or non-owned autos, as each may be applicable.

C. Workers Compensation and Employers' Liability insurance or qualified self-insurance satisfying statutory requirements, which includes Employers' Liability coverage with limits of not less than $1 million per accident. If Contractor will provide leased employees, or, is an employee leasing or temporary staffing firm or a professional employer organization (PEO), coverage also shall include an Alternate Employer Endorsement (providing scope of coverage equivalent to ISO policy form WC 00 03 01 A) naming the County as the Alternate Employer, and the endorsement form shall be modified to provide that County will receive not less than thirty (30) days advance written notice of cancellation of this coverage provision. If applicable to Contractor's operations, coverage also shall be arranged to satisfy the requirements of any federal workers or workmen's compensation law or any federal occupational disease law.

D. Professional Liability/Errors and Omissions

Insurance covering Contractor's liability arising from or related to this Contract, with limits of not less than $1 million per claim and $2 million aggregate. Further, Contractor understands and agrees it shall maintain such coverage for a period of not less than three (3) years following this Agreement's expiration, termination or cancellation.

April 11, 2016

Attachment 3

SCHEDULE OF PAYMENTS

The undersigned Proposer offers to perform the work described in the Request for Proposals (RFP) for the following prices. County will withhold a 10% retention of each payment and release accumulated retention amount as the final project payment upon Final Acceptance of all Deliverables. No payment will be made until acceptance of each Deliverable in accordance with all of the applicable provisions of the Consultant Services Agreement. This is a summary of Deliverables only and must be read in conjunction with all the requirements of the Consultant Services Agreement and its various exhibits and attachments, including Exhibit A, Scope of Work. Unless otherwise noted, section references under the Task column are to sections of Exhibit A, Scope of Work, to the Consultant Services Agreement. County will reimburse the Contractor at a markup of 5% for all permit fees and inspection costs associated with Task 3, and the cost of new or upgraded server licenses associated with Task 7. The Proposer rate(s) (hourly, monthly, etc.) shall include all administrative costs, labor, supervision, materials, transportation, taxes, equipment, and supplies unless stated otherwise in the RFP. It is understood and agreed that where quantities, if any, are set forth in the Schedule of Payments, they are only estimates, and the unit prices quoted, if any, will apply to the actual quantities, whatever they may be.

SCOPE OF WORK TASK	DELIVERABLE	UNIT	UNIT RATE	ESTIMATED NO. OF UNITS	PAYMENT AMOUNT
TASK 1: PROJECT MANAGEMENT					
J-1	Work Schedule	LS	$ 6,800.00	1	$ 6,800.00
J-2	Management Meetings	EA	$ 361.00	10	$ 3,610.00
TASK 2: SUBMITTALS					
K-1.1	All Working Drawings	LS	$ 8,730.00	1	$ 8,730.00
K-1 2	All Shop Drawings	LS	$ 6,530.00	1	$ 6,530.00
K-1 3	All Supporting Information for Exhibit F, Equipment List	LS	$ 8,576.00	1	$ 8,576.00
K-1.4	Acceptance Test Plan	LS	$ 3,780.00	1	$ 3,780.00
TASK 3: PERMITS					
L-1	Allowance for Contractor to obtain any necessary permits. County will reimburse Consultant for all permit fees and associated inspection fees for any permits necessary to complete the Scope of Work	AL	$10,000	1	$10,000

HOA 1870067 1

TASK 4: CONDUIT, CONDUCTOR, AND WIRE INSTALLATION					
M-1 to M-2	Installation of all Conduit	LS	$ 62,090.000	1	$ 62,090.00
M-1 to M-2	Installation of all Power Conductors	LS	$ 28,306.00	1	$ 28,306.00
M-1 to M-2	Installation of all Signal and Control Wires	LS	$ 112,106.00	1	$ 112,106.00
M-1 to M-2	Installation of all Fiber Optic Cable (Communication Cable)	LS	$ 42,645.00	1	$42,645.00
M-1 to M-2	Installation of Above Ground RIO Panels	EA	$ 6,548.00	4	$ 26,192.00
M-1 to M-2	Installation of Below Ground Instrument Panels	EA	$ 891.88	24	$ 21,405.00
M-1 to M-2	Installation of Below Ground Instrument Panel Accessories	EA	$ 812.42	24	$ 19,498.00
M-1 to M-2	Installation of Pull Box	EA	$ 4,610.00	~~1~~ 0	$ 0.00
TASK 5: SENSOR INSTALLATION, CALIBRATION, AND TESTING					
N-1 to N-2	Installation of Water Level Sensors	EA	$ 1,395.59	~~56~~ 53	$ 73,966.27
N-1 to N-2	Installation of Termination Enclosures for Water Level Sensors	EA	$ 1,343.64	~~11~~ 9	$ 12,092.76
N-1 to N-2	Installation of Injection Well Head Pressure Sensors	EA	$ 504.22	37	$ 18,656.00
N-1 to N-2	Installation of Injection Well Flow Rate Sensors – Differential Pressure	EA	$ 1,119.15	33	$ 36,932.00
N-1 to N-2	Installation of Injection Well Packer Pressure Sensors	EA	$ 503.54	13	$ 6,546.00
N-1 to N-2	Installation of Well Vault Flood Switches	EA	$ 502.04	24	$ 12,049.00
N-3	Calibration and testing of all sensors and communications cables at injection well sites	EA	$ 1,122.13	24	$ 26,931.00
N-3	Calibration and testing of all sensors and communications cables at observation well sites	EA	$ 658.82	~~11~~ 10	$ 6,588.20
TASK 6: TELEMETRY SYSTEM INSTALLATION AND TESTING					
O-1 to O-2	Installation and wiring of new RIO(s) and appurtenances	EA	$ 3,633.25	4	$ 14,533.00
O-3	Testing, documentation, and demonstration of functionality for RIO(s) and appurtenances	EA	$ 3,396.00	4	$ 13,584.00

TASK 7: SOFTWARE PROGRAMMING/CONFIGURATION, INTEGRATION, AND TESTING					
P-1	Programming of all RIO's.	HR	$ 151.00	~~200~~ 100	$ 15,100.00
P-1	Programming of existing PLCs on the WCBBP to connect and integrate with new RIO's and instrumentation.	HR	$ 151.00	~~200~~ 100	$ 15,100.00
P-1	Configuration of new HMI screens for the WCBBP Telemetry System Phase IIB.	HR	$ 151.00	120	$ 18,120.00
P-1	Configuration of HMI workstations at Alamitos Yard, Dominguez Yard, El Segundo Yard, and Redondo Yard	HR	$ 151.00	20	$ 3,020.00
P-1	Configuration of existing alarm management software to monitor the WCBBP Telemetry System Phase IIB	HR	$ 151.00	60	$ 9,060.00
P-1	Upgrade server licenses at Public Works' Headquarters and field workstations as needed to allow monitoring of additional WCBBP Telemetry System Phase IIB signals Delivery of all additional licenses and/or capacity requirements to allow for full use of the SBTS by Public Works as required in the Agreement, including Exhibit A (Scope of Work) (NOTE: County will reimburse Consultant for the total cost of all new software licenses)	HR	$ 151.00	20	$ 3,020.00
P-1	Server licenses for Public Works' Headquarters and field workstations.	EA	$ 880.00	7	$ 6,160.00
P-1	Testing, documentation, and demonstration of functionality of the complete SBTS to monitor and analyze the collected data in real-time.	HR	$ 151.00	~~100~~ 80	$ 12,080.00
TASK 8: O&M MANUALS					
Q-1 to Q-5	Operation and Maintenance Manuals (3 hard copies and 1 electronic copy)	LS	$ 5,500.00	1	$ 5,500.00
TASK 9: TECHNICAL WORKSHOPS					
R-1	Technical Workshop to demonstrate telemetry system functionality and confirm the direction of the interface and application development Present/discuss graphical interface, software, operator screens, system integration programming, operation and maintenance, standards and functionality, and necessary simulations	EA	$ 2,134.00	1	$ 2,134.00
R-2	Technical Workshop to demonstrate system performance Training for	EA	$ 2,134.00	1	$ 2,134.00

	Public Works personnel on each instrument, network hardware function, and maintenance. Visit various jobsites to demonstrate hands-on use of programming, system components, and screen navigation.				
TASK 10: FINAL ACCEPTANCE, SYSTEM MAINTENANCE AND SUPPORT					
S-1	Final testing	LS	$ 7,955.00	1	$ 7,955.00
S-2	All As-Built Drawings	LS	$ 3,300.00	1	$ 3,300.00
S-3	All Record Documents and Process Documentation	LS	$ 825.00	1	$ 825.00
S-4	Updated Exhibit F, Equipment List	LS	$ 1,210.00	1	$ 1,210.00
S-7	Contractor's commitment to provide system maintenance and support for the WCBBP Telemetry Phase IIB, including fixing software bugs and issues, for one full year from Final Acceptance.	MONTH	$ 1,050.83	12	$ 12,610.00

Write-out:
Six Hundred Ninety Nine Thousand, Four Hundred Seventy Four Dollars and Twenty Three Cents $ 699,474.23

TOTAL AMOUNT

LEGAL NAME OF PROPOSER Leed Electric, Inc.		
SIGNATURE OF PERSON AUTHORIZED TO SUBMIT PROPOSAL		
TITLE OF AUTHORIZED PERSON General Manager		
DATE 4/11/2016	STATE CONTRACTOR'S LICENSE NUMBER 379096	LICENSE TYPE A, C-10
PROPOSER'S ADDRESS 13138 Arctic Circle. Santa Fe Springs, CA 90670		
PHONE (562) 270-9500	FACSIMILE (562) 863-5723	E-MAIL sjamali@leedelectric.com

HOA 1870067 1

CONTRACTOR ACKNOWLEDGEMENT, CONFIDENTIALITY, AND COPYRIGHT ASSIGNMENT AGREEMENT

(Note: This certification is to be executed and returned to County with Contractor's executed Agreement. Work cannot begin until County receives this executed document.)

Contractor Name _____

County Agreement No. _____

GENERAL INFORMATION:

The Contractor referenced above has entered into an Agreement with the County of Los Angeles to provide certain services to the County. The County requires the Contractor to sign this Contractor Acknowledgement, Confidentiality, and Copyright Assignment Agreement, for itself and on behalf of Contractor Staff, as defined below.

CONTRACTOR ACKNOWLEDGEMENT:

Contractor understands and agrees that the Contractor Personnel, Consultants, employees, consultants, outsourced vendors and independent contractors (Contractor's Staff) that will provide services in the above referenced agreement are Contractor's sole responsibility. Contractor understands and agrees that Contractor's Staff must rely exclusively upon Contractor for payment of salary and any and all other benefits payable by virtue of Contractor's Staff's performance of work under the above-referenced Agreement.

Contractor understands and agrees that Contractor's Staff are not employees of the County of Los Angeles for any purpose whatsoever and that Contractor's Staff do not have and will not acquire any rights or benefits of any kind from the County of Los Angeles by virtue of my performance of work under the above-referenced Agreement. Contractor understands and agrees that Contractor's Staff will not acquire any rights or benefits from the County of Los Angeles pursuant to any agreement between any person or entity and the County of Los Angeles.

CONFIDENTIALITY AGREEMENT:

Contractor and Contractor's Staff may be involved with work pertaining to services provided by the County of Los Angeles and, if so, Contractor and Contractor's Staff may have access to confidential data and information pertaining to persons and/or entities receiving services from the County. In addition, Contractor and Contractor's Staff may also have access to proprietary information supplied by other vendors doing business with the County of Los Angeles. The County has a legal obligation to protect all such confidential data and information in its possession, especially data and information concerning health, criminal, and welfare recipient records. Contractor and Contractor's Staff understand that if they are involved in County work, the County must ensure that Contractor and Contractor's Staff, will protect the confidentiality of such data and information. Consequently, Contractor must sign this Confidentiality Agreement as a condition of work to be provided by Contractor's Staff for the County.

Contractor and Contractor's Staff hereby agrees that they will not divulge to any unauthorized person any data or information obtained while performing work pursuant to the above-referenced Agreement between Contractor and the County of Los Angeles. Contractor and Contractor's Staff agree to forward all requests for the release of any data or information received to County's Project Manager.

Contractor and Contractor's Staff agree to keep confidential all health, criminal, and welfare recipient records and all data and information pertaining to persons and/or entities receiving services from the County, design concepts, algorithms, programs, formats, documentation, Contractor proprietary information and all other original materials produced, created, or provided to Contractor and Contractor's Staff under the above-referenced Agreement. Contractor and Contractor's Staff agree to protect these confidential materials against disclosure to other than Contractor or County employees who have a need to know the information. Contractor and Contractor's Staff agree that if proprietary information supplied by other County vendors is provided to me during this employment, Contractor and Contractor's Staff shall keep such information confidential.

Contractor and Contractor's Staff agree to report any and all violations of this agreement by Contractor and Contractor's Staff and/or by any other person of whom Contractor and Contractor's Staff become aware.

Contractor and Contractor's Staff acknowledge that violation of this agreement may subject Contractor and Contractor's Staff to civil and/or criminal action and that the County of Los Angeles may seek all possible legal redress.

CONTRACTOR ACKNOWLEDGEMENT, CONFIDENTIALITY, AND COPYRIGHT ASSIGNMENT AGREEMENT

_____ By initialing here, Contractor agrees that the Deliverables acquired by County under this Agreement are County IP, as defined in the Agreement, and subject to the Copyright Assignment Agreement below.

START OF COPYRIGHT ASSIGNMENT AGREEMENT

Contractor and Contractor's Staff agree that all Deliverables developed or acquired under this Agreement by County in whole or in part pursuant to the above referenced Agreement, and all works based thereon, incorporated therein, or derived therefrom (excluding Siemen's software, or Contractor Pre-Existing Work and Joint IP) shall be the sole property of the County.

In connection with this, Contractor and Contractor's Staff hereby assign and transfer to the County in perpetuity for all purposes all their right, title, and interest in and to all such items, including, but not limited to, all unrestricted and exclusive copyrights, patent rights, trade secret rights, and all renewals and extensions thereof.

Whenever requested by the County, Contractor and Contractor's Staff agree to promptly execute and deliver to County all papers, instruments, and other documents requested by the County, and to promptly perform all other acts requested by the County to carry out the terms of this agreement, including, but not limited to, executing an assignment and transfer of copyright of such Deliverables.

The County shall have the right to register all copyrights in the name of the County of Los Angeles and shall have the right to assign, license, or otherwise transfer any and all of the County's right, title, and interest, including, but not limited to, copyrights, in and to the items described above.

END OF COPYRIGHT ASSIGNMENT AGREEMENT

Contractor and Contractor's Staff acknowledge that violation of this agreement may subject them to civil and/or criminal action and that the County of Los Angeles may seek all possible legal redress.

SIGNATURE: _____ DATE: _____/_____/_____

PRINTED NAME: _____

POSITION: _____

SCOPE OF WORK

WEST COAST BASIN BARRIER TELEMETRY SYSTEM PHASE IIB

PART 1 – GENERAL INFORMATION AND REQUIREMENTS

A. OBJECTIVE

The County of Los Angeles Department of Public Works (Public Works) has an existing Seawater Barrier Telemetry System (SBTS) already installed and functioning that monitors segments of the Alamitos Barrier Project (ABP), the Dominguez Gap Barrier Project (DGBP), and the West Coast Basin Barrier Project (WCBBP). The existing SBTS utilizes Siemens WinCC software and other Siemens related equipment and appurtenances. The purpose of this Scope of Work is to extend the existing SBTS to monitor segments of the WCBBP still without a telemetry system. The WCBBP Telemetry System Phase IIB consists of connecting 24 injection wells and 11 observation wells associated with the WCBBP and integrating them into the SBTS. The extension shall be seamless with the same hardware installation and software configuration already used on the SBTS.

This Scope of Work as described herein provides tasks and specifications that will direct the prosecution of work to completion. This project will require the Contractor's expertise in installing/programming the telemetry system. The Contractor is responsible to provide Public Works with a workable and scalable finished product as described in this Section A, Objective.

B. PUBLIC WORKS' CONTRACT MANAGER

Public Works' Contract Manager will be George Win of Water Resources Division, who may be contacted at (626) 458-6190, Monday through Thursday, 6:30 a.m. to 5:15 p.m. The Contract Manager is the only person authorized by Public Works to request work of the Contractor. From time to time, Public Works may change the Contract Manager. The Contractor shall be notified in writing when there is a change in Contract Manager.

C. WORK ORGANIZATION

C - 1 GENERAL

The organization and payment of the work shall be divided into each individual deliverable as listed in Section T, Schedule of Tasks and Deliverables. Each task shall be performed as described in this Scope of Work; Exhibit B, Plans; and any other reference cited herein. The Contractor is responsible for organizing its work according to the specified task.

C-2 REQUIRED AND OPTIONAL FACILITIES

Required facilities are denoted on Exhibit B, Plans, and in Table E – 1.2. Optional facilities are designated by an asterisk (i.e. *). Depending on funding, none, some, or all of the optional facilities may be included in the Scope of Work. Optional facilities shall not be added in the Scope of Work without prior written authorization from the Contract Manager. For optional facilities authorized by the Contract Manager, each completed optional facility configuration shall be fully compatible with and integrated into the entire SBTS.

D. WORK LOCATION

The work shall be performed in the following Cities:

City of El Segundo, Exhibit B, Plans, sheets 28-35.

City of Manhattan Beach, Exhibit B, Plans, sheets 36-37.

City of Hermosa Beach, Exhibit B, Plans, sheets 38-39.

City of Redondo Beach, Exhibit B, Plans, sheets 40-47.

E. SCOPE AND CONTROL OF WORK

E - 1 WORK DESCRIPTION

E - 1.1 General

Without limiting the other specifications and requirements set forth in this Scope of Work, the Contractor shall meet the following requirements.

Furnish, install, connect, configure, and develop the WCBBP Telemetry System Phase IIB as indicated in Exhibit B Plans. The completed telemetry system shall provide both local and remote monitoring capabilities of specific conditions of the entire barrier system. All accessories required for satisfactory installation and operation of the equipment in order to meet the project objective described herein shall be furnished and installed whether or not explicitly mentioned in this Scope of Work or shown on Exhibit B, Plans.

The Contractor is responsible for the manufacture delivery and installation of all necessary hardware, software, programming, and other project components. It is important to note that Public Works has an existing SBTS already installed and functioning that utilizes

Siemens WinCC software and other Siemens related equipment and appurtenances. The purpose of this project is to extend the existing SBTS to monitor segments of the WCBBP not yet installed with a telemetry system. The WCBBP Telemetry System Phase IIB consists of connecting 24 injection wells and 11 observation wells associated with the WCBBP and integrating them into the SBTS.

The WCBBP Telemetry System Phase IIB shall be installed to operate in harsh outdoor environments without auxiliary heating and cooling systems. The telemetry system shall be designed to operate and monitor 24 hours per day, unattended, with operator attention required only periodically. Operator intervention requirements shall be limited to analyzing collected data as desired, modifying system timing, and responding to alarms.

The telemetry system shall accommodate potential modifications or future expansions if deemed necessary. Such modification shall not require additional software or central hardware.

The completed telemetry system shall provide real-time data monitoring, logging the data every 15 minutes (with synchronized reporting by all equipment), present the data in a user-friendly interface similar to the existing Siemens WinCC screens and allow for quick data manipulation and analysis. All software configurations and hardware, and all installation thereof, shall be similar and compatible to that already installed on the SBTS.

All work shall be performed in accordance with this Scope of Work, Exhibit B, Plans, the approved working and shop drawings, and any other supporting documents later incorporated into the project Scope of Work.

E - 1.2 <u>Performance Criteria</u>

The WCBBP Telemetry System Phase IIB shall be fully capable of monitoring the conditions of the barrier facilities identified on Table E – 1.2 and in subsection E - 2, Plans and Specifications. Table E – 1.2 describes the well and facility components that will be monitored by the WCBBP Telemetry System Phase IIB. The wells denoted by an asterisk (i.e., *) are to be incorporated into the Scope of Work with approval from the Contract Manager as an Optional Task as described in subsection C-2, Required and Optional Facilities. The following is a list of data that will be monitored by the telemetry system.

Injection Wells

1. Water Levels
2. Flow Rates
3. Well Head Pressures
4. Vault Flooding
5. Packer Pressures (Dual injection wells with packers)

Observation Wells

1. Water Levels

Table E -1.2
WEST COAST BASIN BARRIER PROJECT FACILITY INFORMATION

SEGMENT	RIO PANEL	CITY LOCATION	WELL NUMBER	SITE TYPE	FACILITY/WELL TYPE
1	RIO-4R	EL SEGUNDO	4R	Injection	Dual w/Packer
			4PR	Observation	Multiple
			4P	Injection	Dual w/Packer
1	RIO-4K	EL SEGUNDO	4K	Injection	Dual w/Packer
			4KM	Observation	Multiple
			4M	Injection	Dual w/Packer
			4F	Injection	Dual w/Packer
			4FH	Observation	Multiple
			4H	Injection	Dual w/Packer
1	RIO-4C	EL SEGUNDO	4C	Injection	Dual w/Packer
			4CE	Observation	Multiple
			4E	Injection	Dual w/Packer
1	RIO-3Z	EL SEGUNDO	3Z	Injection	Dual w/Packer
			3ZA	Observation	Single
			4A	Injection	Dual w/Packer
2	RIO-4W	EL SEGUNDO	4W	Injection	Dual w/Packer
2	RIO-5B	EL SEGUNDO	5B	Injection	Dual w/Packer
2	RIO-5L1	EL SEGUNDO	5M1	Injection	Dual w/Packer
3	RIO-6E	MANHATTAN BEACH	6EH2	Observation	Single
4	RIO-7E	HERMOSA BEACH	7BE0.1*	Observation	Multiple
5	RIO-8F2	REDONDO BEACH	8F	Injection	Single
5	RIO-8M	REDONDO BEACH	8M1	Injection	Single
5	RIO-8S	REDONDO BEACH	8T	Injection	Single

Table E -1.2 WEST COAST BASIN BARRIER PROJECT FACILITY INFORMATION					
SEGMENT	**RIO PANEL**	**CITY LOCATION**	**WELL NUMBER**	**SITE TYPE**	**FACILITY/WELL TYPE**
5	RIO-8X	REDONDO BEACH	8Y	Injection	Single
5	RIO-9D1	REDONDO BEACH	9E	Injection	Single
			9F	Injection	Single
5	RIO-9G	REDONDO BEACH	9J	Injection	Single
			9GJ(LSP)*	Observation	Single
5	RIO-9R	REDONDO BEACH	9R1(LSP)*	Injection	Single
			9R1(SILV)*	Injection	Single
5	RIO-9U	REDONDO BEACH	9U1V1*	Observation	Multiple
			9U1(SILV)*	Injection	Single
			9U1(LSP)*	Injection	Single
5	RIO-9X	REDONDO BEACH	9XY	Observation	Single
5	RIO-10L	REDONDO BEACH	10J1L*	Observation	Multiple

*Denotes additional scope elements to be included as an Optional Task (see subsection C-2), as approved by the Contract Manager.

The telemetry system shall use the Siemens WinCC software and the telemetry server currently in use at Public Works' Headquarters Building, and at other facilities utilizing Siemens equipment.

The telemetry system shall operate both automatically on a scheduled frequency and manually as required to fulfill the needs of Public Works.

1. Transmission: The monitored data shall be transmitted in real-time to the Public Works Headquarters central computer and all existing SBTS workstations. The transmission path method shall be as shown on Exhibit B, Sheet 3, and as described in subsection E - 2, Plans and Specifications, and subsection O-2, Products.

2. Data Storage: The monitored data shall be automatically stored every 15 minutes on the Public Works Headquarters central computer and all existing SBTS workstations.

3. Alarms: The telemetry system shall be capable of triggering alarms based on user configurable threshold limits of any instrument reading or calculated value. The telemetry system shall accommodate system additions to call Public Works Water Resources Division (WRD) and Public Works

Flood Maintenance Division (FMD) in the occurrence of an alarm.

4. Display: The telemetry system shall display both the current and historical trending in a graphical user interface as provided by the existing telemetry server located in the Public Works Headquarters.

E - 2 PLANS AND SPECIFICATIONS

E - 2.1 General

The Contractor shall keep at the jobsite a copy of this Scope of Work and Exhibit B, Plans, at all times.

This Scope of Work and Exhibit B, Plans, are intended to be complementary and cooperative. Anything specified in this Scope of Work and not shown on Exhibit B, Plans, or vice versa, shall be as though shown on or specified in both.

Exhibit B, Plans, shall be supplemented by such working drawings and shop drawings as are necessary to adequately control the work.

The Contractor shall ascertain the existence of any conditions affecting the cost of the work through a reasonable prior examination of the jobsite.

The Contractor shall, upon discovering any error or omission in this Scope of Work or Exhibit B, Plans, immediately call it to the attention of the Contract Manager.

E - 2.2 Plans

1. Exhibit B, Plans, includes the following:

    a. Cover sheet and table of contents.

    b. Overall system architecture.

    c. One-line diagrams

    d. Location drawings

    e. Instrumentation diagrams

    f. Construction details

E - 2.3 Specifications

The work shall be performed or executed in accordance with this Scope of Work.

E - 3 RIGHT OF WAY / WORK BOUNDARY

The Contractor shall perform the work within the limits of Public Works' or public right of way. The telemetry system is to be installed in the location as described on Exhibit B, Plans. The work boundary is defined as the boundary within which the Contractor shall perform the work. Unless otherwise provided, the Contractor shall make arrangements, pay for, and assume all responsibility for acquiring, using, and disposing of additional work area and facilities temporarily required. The Contractor shall indemnify and hold harmless from all claims for damages caused by such actions.

E - 4 INSPECTION

The work is subject to inspection and approval by the Contract Manager. The Contractor shall notify the Contract Manager before noon of the working day before inspection is required. Any work requiring inspection shall be done only in the presence of the inspector or the Contract Manager, unless otherwise noted. Any work done without proper inspection will be subject to rejection. The Contract Manager and any authorized representatives shall at all times have access to the work during its construction at shops and yards as well as the jobsite. The Contractor shall provide every reasonable facility for ascertaining that the materials and workmanship are in accordance with these specifications. Inspection of the work shall not relieve the Contractor of the obligation to fulfill all conditions of the Contract.

F. CHANGES IN WORK

The Contractor shall prosecute work to completion regardless of changes in required materials, equipment, personnel, other pertinent resources, and in field and working conditions throughout the duration of this Contract. The Contractor shall implement sound construction and engineering judgment in meeting the Scope of Work objectives as described in Section A, Objective. Public Works anticipates the judicious prosecution of the work to meet those objectives.

The Contractor shall prudently project any foreseeable changes in work, by means of field reconnaissance and thorough review of the plans, to meet the objective of this Scope of Work. The Contractor shall be responsible for the cost of such changes.

Where unforeseeable changes occur during the prosecution of work the Contractor shall, before proceeding with work, provide all relevant evidence that such changes are required to practically meet the objective of this Scope of Work for approval by Public Works. If and only when Public Works approves the unforeseeable change in work in writing, Public Works shall reimburse the Contractor in such amounts as it deems appropriate for the work that has been changed. The Contractor shall provide Public Works with receipts, bills, invoices, and the like for proper justification of said reimbursement.

G. PRODUCT DELIVERY, STORAGE, AND HANDLING

G - 1 PROTECTION

Contractor shall protect equipment during transportation and installation; provide proper coverage to prevent damage due to weather conditions; store at a secure site to mitigate against theft or vandalism; and replace damaged materials. Stored materials shall be reasonably accessible for inspection.

The Contractor may store equipment, materials, and pertinent components for the System at the following locations:

1) El Segundo Yard
   2122 El Segundo Boulevard
   El Segundo, CA 90245

2) Redondo Yard
   615 Anita Street
   Redondo Beach, CA 90278

The Contractor shall coordinate any and all use of these facilities with the appropriate field superintendents. Public Works is not responsible for damage or loss to Contractor's equipment, materials, and pertinent components that are stored or left at any County facilities. If additional storage is required for the project, the Contractor shall ensure that such facilities are secured prior to commencement of work.

G - 2 INSPECTION

All materials intended for use on this project are subject to inspection. Contractor shall make all materials available for inspection by an agent of Public Works.

H. EXECUTION OF WORK

The Contractor shall diligently execute the work to completion to minimize public inconvenience or exposure to possible hazards, and to restore street and other

work areas to their original condition as soon as practicable. If the Contract Manager determines that the Contractor is failing to execute the work to the proper extent, the Contractor shall, upon orders from the Contract Manager, immediately take steps to remedy the situation.

H - 1 WORKING DAY

A working day is any day within the period when the Notice to Proceed is issued and the date provided for completion. Days that are not considered working days are as follows:

1. Saturday
2. Sunday
3. Any day designated as a holiday by Public Works.
4. Any day designated as a holiday in a Master Labor Agreement entered into by the Contractor.

I. RESPONSIBILITIES OF THE CONTRACTOR

Contractor shall provide new components that shall be in working order at time of installation and testing.

Contractor shall perform testing to ensure that the WCBBP Telemetry System Phase IIB functions as per this Scope of Work.

Contractor shall provide software and hardware that is compatible with Public Works existing Siemens WinCC application and SBTS.

Contractor shall install and configure all deployed hardware and software in a manner consistent with good security practices to mitigate unauthorized access to any installed component or system. This includes but may not be limited to Remote I/O's (RIOs), ethernet switches, Programmable Logic Controllers (PLCs), telemetry alarm management software, etc.

I - 1 REQUIREMENTS AND REGULATORY AGENCIES

I - 1.1 Codes

Contractor shall perform work in accordance with the latest applicable edition requirements of the following agencies and as specified and as applicable whether explicitly stated or not in this Scope of Work or Exhibit B, Plans:

1. Americans with Disabilities Act (ADA).

2. Standard Specifications for Public Works (Green Book).

3. Standard Specifications for Public Works Construction (Grey Book).

4. Standard Plans for Public Works Construction (SPPWC).

5. The American Public Works Association (APWA) Standard Plans for Public Works Construction.

6. California/OSHA (Occupational Safety and Health Act) Construction Safety Orders.

7. All local codes which govern the installation and usage of electrical and electronic equipment, including pertinent conduits and structural facilities.

   - American Society for Testing and Materials (ASTM).
   - American Concrete Institute (ACI).
   - American National Standards Institute (ANSI).
   - Institute of Electrical and Electronic Engineers (IEEE).
   - Instrument Society of America (ISA)
   - National Electrical Contractors Association (NECA)
   - National Electrical Manufactures Association (NEMA).
   - National Fire Protection Association (NFPA).
   - NFPA 70, National Electric Code (NEC).
   - California Public Works Association (CPWA).

I - 2 COOPERATION AND COLLATERAL WORK

The Contractor shall be responsible for ascertaining the nature and extent of any simultaneous, collateral, and essential work by others. Public Works, its workers and contractors and others, shall have the right to operate within or adjacent to the jobsite during the performance of such work.

Public Works, the Contractor, and each of such workers, contractors and others shall coordinate their operations and cooperate to minimize interference.

The Contractor shall be responsible for all costs involved as a result of coordinating its work with others. The Contractor will not be entitled to additional compensation from Public Works for damages resulting from such simultaneous, collateral, and essential work. If necessary to avoid or minimize such damage or delay, the Contractor shall redeploy its work force to others parts of the work.

I - 3 PROJECT SITE MAINTENANCE

I - 3.1 Cleanup

Throughout all phases of installation, including suspension of work, and until final acceptance, the Contractor shall keep the jobsite clean and free from rubbish and debris.

Materials and equipment shall be removed from the jobsite as soon as they are no longer necessary. Before the final inspection, the jobsite shall be cleared of equipment, unused material, and rubbish so as to present a satisfactory clean and neat appearance. Contractor shall be responsible for all cleanup costs.

I - 3.2 Temporary Light, Power, and Water

The Contractor shall furnish, install, maintain, and remove all temporary light, power, and water at its own expense. These include piping, wiring, lamps, and other equipment necessary for the work and shall include constructing those facilities which may be required to provide prevention, control, and abatement of water pollution.

I - 3.3 Sanitation

The Contractor shall provide and maintain enclosed toilets for the use of employees engaged in the work. These accommodations shall be maintained in a neat and sanitary condition. They shall also comply with all applicable laws, ordinances, and regulations pertaining to public health and sanitation of dwellings and camps.

Wastewater shall not be interrupted. Should the Contractor disrupt existing sewer facilities, sewage shall be conveyed in closed conduits and disposed of in a sanitary sewer system. Sewage shall not be permitted to flow in trenches or be cover by backfill.

I - 4 BEST MANAGEMENT PRACTICES

Best Management Practices (BMPs) shall be defined as any program, technology, process, sighting criteria, operating method, measure, or

device which controls, prevents, removes, or reduces pollution. The Contractor shall obtain and refer to the California Storm Water Best Management Practice Handbooks, Volume 3 Construction BMP Handbook and the Los Angeles County Department of Public Works Best Management Practices Handbook for Construction Activities.

The Contractor shall have a minimum of two readily accessible copies of each publication on the jobsite at all times.

As a minimum, the Contractor shall implement the following BMPs in conjunction with all its activities and construction operations:

NO.	CONSTRUCTION PRACTICES
CD4(2)	Water Conservation Practices

NO.	WASTE MANAGEMENT
CD13(2)	Solid Waste Management
CD17(2)	Sanitary/Septic Waste Management

NO.	VEHICLE AND EQUIPMENT MANAGEMENT
CD18(2)	Vehicle and Equipment Cleaning
CD19(2)	Vehicle and Equipment Fueling
CD20(2)	Vehicle and Equipment Maintenance

Additional BMPs may be required as a result of a change in actual field conditions, contractor activities, or construction operations. When more than one BMP is listed under each specific BMP category, the Contractor shall select the appropriate and necessary number of BMPs within each category in order to achieve the BMP objective.

The Contractor shall implement BMPs for approximately 100 linear feet ahead and behind the jobsite area.

Public Works, as permittee, is subject to enforcement actions by the State Water Resources Control Board, Environmental Protection Department, and private citizens. Public Works will assess the Contractor a penalty of $1,000 for each calendar day that the Contractor has not fully

implemented the BMPs specified for this Contract and/or is otherwise in noncompliance with these provisions. In addition, Public Works will deduct, from the final payment due to the Contractor, the total amount of any fines levied on Public Works, plus legal and staff costs, as a result of the Contractor's lack of compliance with these provisions and/or less than complete implementation of the specified BMPs.

I - 5 PROTECTION AND RESTORATION OF EXISTING IMPROVEMENTS

The Contractor shall be responsible for the protection of public and private property adjacent to the work site and shall exercise due caution to avoid damage to such property.

The Contractor shall repair or replace all existing improvements within the right of way which are not designated for removal and are damaged or removed as a result of the Contractor’s activities. Repairs and replacements shall be at least equal to existing improvements and shall match them in finish and dimension.

Trees, lawns, and shrubbery that are not to be removed shall be protected from damage or injury. If damaged or removed due to Contractor's operations, they shall be restored or replaced in as nearly the original condition and location as is reasonably possible. Lawns shall be reseeded and covered with suitable mulch.

I - 6 PUBLIC CONVENIENCE AND SAFETY

I - 6.1 Working Hours

The Contractor shall perform work in the hours prescribed by each respective City.

I - 6.2 Street Closures, Detours, Barricades

The Contractor shall comply with all applicable State, County, and City requirements for the closure of streets. The Contractor shall provide flag persons and watch persons as required to control traffic and advise the public of detours and construction hazards. The Contractor shall also be responsible for compliance with additional public safety requirements which may arise during the course of work.

I - 6.3 Traffic Control Plans and Devices

The Contractor shall provide any necessary traffic control plans, in accordance with the Manual of Uniform Traffic Control Devices. In addition, the Contractor shall operate all traffic control devices as

specified in the Caltrans "Manual of Traffic Controls – For Construction and Maintenance Work Zones".

I - 7 CONFINED SPACES

1. Confined Space Entry Program. The Contractor shall be responsible for implementing, administering and maintaining a confined space entry program (CSEP) in accordance with Sections 5156, 5157, and 5158, Title 8, CCR.

   Prior to performing any work in a confined space, the Contractor shall prepare and submit its comprehensive CSEP to the Contract Manager. The CSEP shall address all potential physical and environmental hazards and contain procedure for safe entry into confined spaces, including, but not limited to the following:

   a. Training of personnel

   b. Purging and cleaning the space of materials and residue

   c. Potential isolation and control of energy and material inflow

   d. Controlled access to the space

   e. Atmospheric testing of the space

   f. Ventilation of the Space

   g. Special hazards consideration

   h. Personal protective equipment

   i. Rescue plan provisions

   The Contractor's submittal shall include the names of its personnel, including subcontractor personnel, assigned to the project who will have CSEP responsibilities, their CSEP training, and their specific assignment and responsibility in carrying out the CSEP.

PART 2 - PROJECT TASKS AND DELIVERABLES

J. TASK 1: PROJECT MANAGEMENT

J - 1 WORK SCHEDULE

The work schedule shall reflect the following:

J - 1.1 Criteria

Within 15 working days after Public Works issues the Notice to Proceed (NTP), the Contractor shall prepare and deliver a work schedule that conforms to the following criteria:

1. The work schedule shall be prepared using an automated Network Analysis System (NAS) with Critical Path Method (CPM) techniques. The NAS shall be the latest version of Primavera "Suretrak", Microsoft "Project", or Public Works approved equal.

2. Task items shall be based on the items of work for each task per Section C, Work Organization.

    a. Work activities shall be subdivided into those portions to be installed during each task.

    b. The procurement of materials and equipment shall be included as activities.

    c. Work to be performed by subcontractors shall be identified and shown as work activities.

3. Completion of the work shall be performed in accordance with this Scope of Work and Exhibit B, Plans.

4. Milestones shall be clearly illustrated and identified as such.

J - 1.2 Requirements

The work schedule shall reflect the following:

1. Contractor shall work within the time restrictions as specified by each City.

2. Contractor shall schedule and be responsible for coordinating related work with other trades, vendors, subcontractors, and others to avoid omissions and delays in project status.

3. Work shall be scheduled to be performed by task as described in Section C, Work Organization.

4. The Contractor shall obtain prior written approval from the Contract Manager before any work is started on optional wells and or facilities.

5. Work performed on optional wells and facilities shall be indicated on the schedule. Material and equipment required for this task shall not be procured prior to the Contractor receiving prior written approval from the Contract Manager.

J - 1.3 Monthly Updates

The Contractor shall submit two paper copies of the updated work schedule to the Contract Manager on the first working day of each month.

All work shall be performed in accordance with the approved schedule. Any variations to project scheduling must be approved by the Contract Manager.

J - 2 MANAGEMENT MEETINGS

Contractor shall attend and participate in all meetings scheduled by or at the request of the Contract Manager. These include, but are not limited to, a regularly scheduled weekly management meeting on the project site for the purposes of the management of the installation and for the management of the project site operations. The Contractor shall attend and participate in all pre-job meetings with each respective City, at least one week prior to starting work within that City. The Contractor shall make available those resources, reports, and records necessary to effectuate timely and productive management meetings. The Contractor shall formally record and publish the minutes, which shall be furnished to all attendees and other interested parties no later than 72 hours following the conclusion of the meeting.

K. TASK 2: SUBMITTALS

K - 1 SUBMITTALS

Submittals as described below shall be mailed to the Contract Manager within 20 business days of the issuance of the NTP. All submittals shall be approved by the Contract Manager prior to commencement of any work.

Contractor shall provide the planned security configurations for each installed component or system (if applicable) for review and approval by Contract Manager and Information Security Officer.

K - 1.1 Working Drawings

Working drawings shall show details of work to be designed and performed by Contractor that are not specifically shown on Exhibit B, Plans, or conditions encountered in the field.

K - 1.2 Shop Drawings

Shop drawings shall show details of manufactured or assembled products proposed to be incorporated into the work. Shop drawings include:

1. Construction materials, Subsection M - 1.3, Submittals.

2. Instrumentation, subsection N - 1.2, Submittals.

3. Telemetry equipment, subsection O - 1.2, Submittals.

K - 1.3 Supporting Information

The following is a list of supporting information required for the administration of this Contract:

Data supporting Exhibit F: Equipment List, including updates, if applicable. This includes, but is not limited to, catalog sheets, manufacturer's brochures, technical bulletins, specifications, equipment cut sheets, diagrams, product samples, and any other information necessary to describe a system, product, or item.

K - 1.4 Acceptance Test Plan

Prior to Final Testing, the Contractor must submit an Acceptance Test Plan that is mutually approved by Public Works and vendor prior to commencing testing to verify that the telemetry system meets the requirements and specifications. See Section S for Final Testing requirements.

L. TASK 3: PERMITS

L - 1 PERMITS

The Contractor shall arrange and pay for any necessary permits and inspections as required by the respective Cities. The Contractor shall abide by the terms and conditions of all obtained permits. Public Works shall reimburse the Contractor for all permit fees, associated inspection fees, and all labor and transportation costs necessary to obtain the permits required to complete the work identified in the Scope of Work at a markup of 5%. Public Works will provide an available allowance as identified in Exhibit M, Schedule of Payments, to pay the Contractor for all costs associated with this task. The Contractor shall provide both hard and electronic copies of all required permits and permissions and all supporting documentation including invoices and receipts.

L - 1.1 City of El Segundo Encroachment Permit

Public Works will obtain an Encroachment Permit from the City of El Segundo for the installation of new conduits and above ground cabinets included in Segment 1 of the WCBBP Telemetry System Phase IIB. A copy of the pre-approved permit is included in Exhibit D, Permits. The Contractor shall comply with all conditions and restrictions of this permit as they pertain to its operations.

- City of El Segundo Public Works Permit Inspection: (310) 524-2300

L - 1.2 City of Hermosa Beach Public Right-of-way Permit (Optional)

The Contractor shall obtain a Public Right-of-way Permit from the City of Hermosa Beach for work on Segment 4 of the WCBBP Telemetry System Phase IIB (i.e., observation well 7BE0.1). Note that work on Segment 4 is an Optional task and will require written authorization from the Contract Manager before being added to the Scope of Work. A copy of a blank permit application is included in Exhibit D, Permits. The Contractor shall comply with all conditions and restrictions of this permit as they pertain to its operations.

- City of Hermosa Beach Public Works Permit Inspection: (310) 318-0262

L - 1.3 Other City Encroachment Permits

The Contractor shall inquire the governing authorities (see below) to confirm whether encroachment permits are necessary. If so, the Contractor shall obtain and pay for permits required for the tasks in

this Scope of Work prior to the start of the work in the corresponding governed areas.

- City of Manhattan Beach Public Works Permit Inspection: (310) 802-5000

- City of Redondo Beach Public Works Permit Inspection: (310) 318-0661

M. TASK 4: CONDUIT, CONDUCTOR, AND WIRE INSTALLATION

M - 1 GENERAL

Contractor shall install all electrical conduit, above ground panels, below ground panels, and related products in accordance with this Scope of Work. In addition, Contractor shall run all necessary signal, control, and communication cables from the injection and observation wells to the appropriate RIO location. Contractor shall use instrument enclosures that are NEMA type 4X as specified in Exhibit B, Plans, or Public Works approved equal. Detailed product specifications are included in Exhibit E, Product Specifications for all products listed in subsection M-1.1 below.

The approximate number of devices, lengths of cable, and related appurtenances to be installed in each work location is included in Section T, under Task No. 4.

M - 1.1 Subsection Includes:

- Metal Conduit.
- Liquid tight flexible metal conduit.
- Fittings and conduit bodies.
- Plastic conduit and fittings.
- Power conductors 600 volts and below.
- Signal and control wires.
- Fiber Optic Cables (Communication Cables).
- Above ground RIO panels.
- Below ground instrument panels.
- Below ground instrument panel accessories.
- Pull boxes.

M - 1.2 References.

- ANSI C80.1 – Rigid Steel Conduit, Hot Dipped Galvanized.
- ANSI/NEMA FB 1 – Fittings, Cast Metal Boxes, and Conduit Bodies for Conduit and Cable Assemblies.

- FS A-A-55810 – Federal Specifications for Flexible Metal Conduit.
- NEMA TC2 – Electrical Plastic Tubing and Conduits.
- NEMA TC3 – PVC Fittings.
- ANSI/NFPA 70 – National Electric Code.
- NECA "Standard of Installation".

M - 1.3 Submittals.

- Specs for the communication cables.
- Contractor shall provide product data for the items listed in M-1.1.

M - 1.4 Regulatory Requirements.

- Contractor shall conform to requirements of ANSI/NFPA 70 (National Electric Code).
- Contractor shall furnish products listed and classified by Underwriters Laboratories, Inc. as suitable for purposes specified and shown.

M - 1.5 Delivery, Storage, and Handling.

- Contractor shall accept conduit onsite. Contractor shall inspect for damage.
- Contractor shall protect conduit from corrosion and entrance of debris by storing above grade. Contractor shall provide appropriate covering.
- Contractor shall protect PVC conduit from nicks and dents.

M - 1.6 Project Conditions.

- Contractor shall verify routing and termination locations of conduit prior to rough-in.
- Conduit runs on Exhibit B, Plans, is approximate unless dimensioned. Contractor shall route conduit as required to complete the wiring system.

- Contractor shall install conduit runs within project boundaries as defined on Exhibit B, Plans. Where impractical, the Contractor shall install conduit at closest possible extent to project boundaries within public right of way only.

M - 2 PRODUCTS

Detailed product specifications are included in Exhibit E, Product Specifications, for all Products listed in subsection M - 1.1.

M - 2.1 Conduit Requirements.

- Outdoor Locations, Above Grade: Contractor shall use rigid galvanized steel conduit and fittings approved for use with rigid conduit.

- Wet or Damp Locations: Contractor shall use Schedule 80 PVC conduit, couplings, straps, fittings, and conduit bodies.

- Dry Locations: Contractor shall use rigid galvanized steel conduit.

M - 2.2 Conduit Examination.

- Contractor shall verify routing and termination locations of conduit prior to rough-in.

M - 2.3 Conduit Installation.

- Contractor shall install conduit in accordance with NECA "Standard of Installations".

- Contractor shall install non-metallic conduit in accordance with manufacturer's instructions.

- Contractor shall arrange supports to prevent misalignments during wiring installations.

- Contractor shall support all conduit using hot dipped galvanized steel or malleable iron straps.

- Contractor shall group related conduits and support using conduit rack. Contractor shall construct rack using galvanized Unistrut channel.

- Contractor shall arrange conduit to present neat appearance. Contractor shall install conduits level and plumb.

- Contractor shall route conduit parallel and perpendicular to walls.

- Contractor shall cut conduit square using a saw and de-burr cut ends.

- Contractor shall fasten conduit securely to fittings.

- Contractor shall join nonmetallic conduit using cement as recommended by manufacturer. Contractor shall wipe conduit dry and clean. Contractor shall apply PVC primer and cement evenly to entire area inserted in fitting. Contractor shall allow to cure for 20 minutes.

- Contractor shall use weather tight conduit hubs to fasten conduit to metallic enclosures.

- Contractor shall provide suitable pull string in each conduit. Contractor shall use suitable caps to protect installed conduit against entrance of dirt and water.

- Contractor shall provide foam sealant in conduits to inhibit migration of water into above-grade enclosures.

- Contractor shall ground and bond conduit in accordance with NFPA 70.

- Contractor shall bury all underground conduit runs at a minimum of 18 inches below finished grade.

- Contractor shall keep all instrumentation conduit runs a minimum of 12 inches from electrical conduit runs.

M - 2.4 <u>Product Installation.</u>

- The Contractor shall use moisture resistant, gel-filled communication connectors in the below ground instrument panels for both dual wells and single wells in lieu of DIN rail terminal blocks. Communication connectors shall be 3M Scotchlok brand or Public Works approved equal.

- Contractor shall install products in accordance with manufacturer's instructions.

- Contractor shall install all wires in existing protective conduit runs. In accordance with Section M, the Contractor shall install

additional conduit anywhere conduit is necessary for the completion of the telemetry system.

- Contractor shall verify the continuity of the wiring. All pulled wiring is subject to inspection to ensure no damage is sustained during installation.

N. TASK 5: SENSOR INSTALLATION, CALIBRATION AND TESTING

N - 1 GENERAL

Contractor shall install all sensors in accordance with this Scope of Work. Detailed product specifications are included in Exhibit E, Product Specifications for all sensors are listed in subsection N - 1.1 below.

The approximate number of sensors and related appurtenances to be installed is included in Section T, under Task No. 5.

N - 1.1 Subsection Includes:

- Water Level Sensor.
- Termination Enclosure for Water Level Sensor.
- Injection Well Head Pressure Sensor.
- Injection Well Flow Rate Sensor – Differential Pressure.
- Injection Well Packer Pressure Sensor.
- Water in Vault Level Sensor.

N - 1.2 Submittals.

- O & M Manuals.
- Calibration Reports.
- Manufacturer's Installation Instructions.

N - 1.3 Qualifications.

- Manufacturer: Contractor shall utilize a company specializing in manufacturing products specified in this section with a minimum of 3 years experience.

N - 1.4 Regulatory Requirements.

- Contractor shall conform to requirements of ANSI/NFPA 70 (National Electric Code).
- Contractor shall furnish products listed and classified by Underwriters Laboratories, Inc. as suitable for purpose specified and shown.

N - 2 PRODUCTS

Detailed product specifications are included in Exhibit E, Product Specifications, for all products listed in Subsection N-1.1

N - 2.1 Installation:

- The Contractor shall use moisture resistant, gel-filled communication connectors in the terminal enclosures for water level sensors in observation well vaults in lieu of DIN rail terminal blocks. Communication connectors shall be 3M Scotchlok brand or Public Works approved equal.

- Contractor shall install products in accordance with manufacturer's instructions.

- Contractor shall label each instrument permanently with its instrument tag as shown on the instrument schedule in Exhibit B, Plans.

- Contractor shall install all wires in existing protective conduit runs. In accordance with Section M, the Contractor shall install additional conduit anywhere conduit is necessary for the completion of the telemetry system.

N - 3 PRODUCT CALIBRATION AND TESTING

Product calibration and testing shall be performed at each injection well and observation well site as follows:

1. Contractor shall verify the continuity of the wiring. All pulled wiring is subject to inspection to ensure no damage is sustained during installation.

2. Contractor shall perform calibration and testing for proper operation over the full range of the instrument.

3. Contractor shall perform testing of each data measurement device at each site by comparing with manually obtained data. The method for acquiring manually obtained data shall be approved by Public Works prior to any calibration activities.

4. All results shall be recorded on the forms in Exhibit H, Test Forms, and submitted to the Contract Manager for verification and approval.

5. All results of manual field testing versus automatic sensors for monitoring attributes shall also be provided.

O. TASK 6: TELEMETRY SYSTEM INSTALLATION AND TESTING

O - 1 GENERAL

Contractor shall install all telemetry system products associated with the new Remote I/O's (RIO's) in accordance with this Scope of Work. Detailed product specifications are included in Exhibit E, Product Specifications, for all products listed in subsection O - 1.1 below.

The approximate number of devices and related appurtenances to be installed in each work location is included in Section T, under Task No. 6.

O - 1.1 Subsection Includes:

- Fiber Optic Network Switch.
- RIO System.
- Surge Protectors – Field Instruments.
- DC Power Supply (24V).

O - 1.2 Submittals.

- Contractor shall submit all wiring diagrams, schematics, panel layouts and Operations and Maintenance (O&M) Manuals.
- Contractor shall submit equipment factory test results where available.
- Contractor shall submit manufacturer's installation instructions.
- Contractor shall submit technical consultant's resumes, references, and relevant project experience.

O - 1.3 Qualifications.

- Manufacturer: Contractor shall utilize a company specializing in manufacturing products specified in this section.
- Contractor: Contractor shall specialize in the installation of electronic equipment and shall specialize in the programming and installation of the specific hardware used.

O - 1.4 Regulatory Requirements.

- Contractor shall conform to requirements of ANSI/NFPA 70 (National Electric Code).
- Contractor shall furnish products listed and classified by Underwriters Laboratories, Inc. as suitable for purpose specified and shown.

O - 2 PRODUCTS

Detailed product specifications are included in Exhibit E, Product Specifications, for all products listed in Subsection O - 1.1.

O - 2.1 Installation

The Contractor shall mount all hardware related to the telemetry system. The Contractor shall bring all wire terminations into the enclosures with a minimum of six feet of additional wire.

The Contractor shall ensure that all RIO's are installed appropriately and shall make all wire connections to the RIO's to operate as outlined in this Scope of Work and Exhibit B, Plans.

Commissioning of the telemetry system, including startup, shall be performed by the Contractor. All pulled cables are subject to inspection and verification to ensure that no damage is sustained during installation.

O - 3 PRODUCT TESTING

1. Contractor shall verify the continuity of the wiring. All pulled wiring is subject to inspection to ensure no damage is sustained during installation.
2. Contractor shall perform testing of all telemetry system products for proper operation and functionality. The telemetry system products must be able to power on and communicate with each component in the system.
3. Contractor shall demonstrate functionality of all RIOs and appurtenances. The RIO system shall be able to power on and be capable to sending and receiving real-time data signals via the communication cables. Contractor shall provide documentation to Public Works for verification and approval.

P. TASK 7: SOFTWARE PROGRAMMING/CONFIGURATION, INTEGRATION, AND TESTING

P - 1 PROGRAMMING AND TESTING GUIDELINES

a. The Contractor shall ensure that all RIOs and telemetry products are installed appropriately before beginning programming.

b. Programming of all RIOs and related appurtenances shall occur so that the WCBBP Telemetry System Phase IIB operates as outlined in this Scope of Work and Exhibit B, Plans. The RIOs shall be programmed to integrate seamlessly with the existing SBTS. The Contractor shall provide programming at the RIOs identified in Table E-1.2, and in Exhibit B, Plans.

c. The Contractor shall program the existing PLCs on the WCBBP to connect and integrate with the RIOs and instrumentation associated with the WCBBP Telemetry System Phase IIB.

d. The Contractor shall utilize the existing telemetry server at Public Works' Headquarters and WinCC software Version 7.0, or newer, in order to configure new user-friendly human machine interface (HMI) screens for the WCBBP Telemetry System Phase IIB modeled after the existing SBTS.

e. The Contractor shall configure the existing HMI workstations at Alamitos Yard, Dominguez Yard, El Segundo Yard, and Redondo Yard to monitor the RIOs and instrumentation associated with the WCBBP Telemetry System Phase IIB.

f. The Contractor shall configure the existing alarm management software on Public Works' Headquarters Water Resources Division Blue Room to monitor the WCBBP Telemetry System Phase IIB alarms.

g. The Contractor shall upgrade the existing server licenses at Public Works' Headquarters Water Resources Division Blue Room and field HMI workstations as needed to allow monitoring of signals from the WCBBP Telemetry System Phase IIB and any anticipated future SBTS projects. If new or upgraded server licenses are required to account for the additional capacity requirement of the SBTS, Public Works shall reimburse the Contractor for the installation cost and the cost of the new or upgraded server licenses at a markup of 5%. The Contractor shall provide all supporting documentation for the cost of the

software licenses including invoices, receipts, warranties, manuals, and license certificates.

Alamitos Yard

1. Siemens SIMATIC WinCC V7.0 SP2-Runtime License. 500 data tags have been occupied out of 700 available data tags.

Dominguez Yard

1. Siemens SIMATIC WinCC V7.0 SP3-Runtime and configuration License. 5,000 tags have been occupied out of 64,000 available tags.

2. Siemens SIMATIC WinCC V7.0 SP2-Runtime License. 500 data tags have been occupied out of 700 available data tags.

El Segundo Yard

1. Siemens SIMATIC WinCC V7.0 SP2-Runtime License. 500 data tags have been occupied out of 700 available data tags.

Redondo Yard

1. Siemens SIMATIC WinCC V7.0 SP2-Runtime License. 500 data tags have been occupied out of 700 available data tags.

Public Works' Headquarters Water Resources Division Blue Room

1. Siemens SIMATIC WinCC V7.0 SP2-Runtime and Configuration License. 5,000 data tags have been occupied out of 8,000 available data tags.

2. Siemens SIMATIC WinCC V7.0 Archive-1500 Archive tags.

h. Following programming, the Contractor must test, demonstrate and document, to the satisfaction of Public Works, the functional capabilities of the complete SBTS to monitor and analyze the collected data in real-time as stated in this Scope of Work.

Q. TASK 8: O&M MANUALS

Q - 1.1 GENERAL

Upon completion of work, the Contractor shall furnish Public Works three reproducible sets of written O&M manuals along with an electronic copy. The manuals shall include a table of contents and shall be comprehensive in describing the overall objectives of the WCBBP Telemetry System Phase IIB and shall describe in detail the telemetry system operations and programming.

Q - 1.2 SYSTEM OVERVIEW

The Contractor shall describe in the O&M manual the system architecture for the completed WCBBP Telemetry System Phase IIB. The paths of communication from in field locations to Public Works' Headquarters Building and other facilities shall be specified and also the methods of data transmission and the integral components necessary to facilitate data acquisition. The Contractor shall include a facility map showing all injection wells, and observation wells incorporated with the telemetry system.

Q - 1.3 SYSTEM COMPONENTS AND EQUIPMENT

The Contractor shall describe in the O&M manual the specified components and equipment employed in the telemetry system architecture. The Contractor shall detail specifically for each component the manufacturer, respective model and part numbers, purpose, power source, power type required, manufacturer specifications, data sheets, applicable warranties, and manufacturers suggested operation guidelines and maintenance. The Contractor shall include photographs showing the installation of system components at a typical injection well, observation well, and other Public Works facilities. This section shall describe specific components including, but not limited to the following items:

- RIOs
- Water Level Sensor
- Well Head Pressure Sensor
- Injection Well Flow Rate Sensor - Magnetic Flow Meter Type
- Injection Well Flow Rate Sensor - Orifice Plate Type
- Injection Well Packer Pressure Sensor

- Water in Vault Float Sensor
- Power Subsystems
- Converter Units

The Contractor shall also include the plan view and layout location of each component comprising the telemetry system. The Contractor shall incorporate the final record drawings as signed and certified by such in the O&M manual. Schematics of telemetry System components and the respective instrumentation schedules shall be incorporated into the O&M manual. The instrumentation schedule shall represent the appropriate instrument signal tag name, the respective channel number, cable pair number, well number, well type instrument type, instrument function description, output signal, supply voltage and type, pressure range, model and part numbers, and depth location of all water level sensors. The schematics shall show wiring configurations of all RIO's with respect to actual wire connections, wire types, specific hardware used along with respective model and part number.

Q - 2 DATA ACQUISITION PARAMETERS

The Contractor shall define in the O&M manual the parameters of data acquisition and shall specify the programming methods of triggering instrument reading frequencies, reading frequency set up, and modifying triggering methods to meet the needs of Public Works. The Contractor shall describe the communication capabilities of the telemetry system and at what thresholds will maximize the telemetry system capabilities so as to not cause system failure.

The Contractor shall specifically define programming logic for each component of the telemetry system. The manual shall define the logic parameters of the instruments, RIOs, operator interface, signal converters, and other programmable components.

The Contractor shall describe the operation of the new WinCC screens and how to navigate through the telemetry system. The O&M manual shall include photos and screenshots showing steps to collect data readings, configure the trend charts, export data, respond to alarms, etc.

The O&M manual shall include detailed instructions on how to add additional sensors and data points to the telemetry system (i.e. installing devices in wells and programming the RIOs and PLCs).

Q - 3 INSTRUMENTATION ALARMS

The Contractor shall define alarms and the detection parameters utilized by the instruments in the O&M manual. The O&M manual shall include steps on how to modify these parameters. Also, the manual shall identify how this information can be extracted from the system to be incorporated with the existing sub database. The Contractor shall define network information and when the alarm changes state and the conditions required for clearing the alarm state. The Contractor shall define alarm thresholds for each instrument and at which parameters each instrument is set. The manual shall include a table listing of all system alarms, descriptions, and action items for troubleshooting each alarm.

Q - 4 MAINTENANCE AND TROUBLESHOOTING

The Contractor shall define in the O&M manual the diagnostic tools available for the RIO's, instrumentation, and all other component diagnostic measurements and their function. The Contractor shall also describe additional software and/or hardware available for troubleshooting. The Contractor shall describe diagnostic processes and their purpose in evaluating telemetry system/component failure and or queries.

Q - 5 CALIBRATION

The Contractor shall describe in the O&M manual the suggested calibration frequency, calibration methods, and procedures for each instrument/component requiring such. The Contractor shall also record and include all calibration histories as performed in the field for each instrument and for each applicable component of the telemetry system.

R. <u>TASK 9: TECHNICAL WORKSHOPS</u>

Near the end of work the Contractor shall schedule at least two sets of technical workshops for Public Works employees and agents. At least one week prior to meeting for the first workshop, the Contractor shall submit a memorandum to the Contract Manager describing workshop objectives and goals for review and approval. The workshops shall utilize the developed O&M manual.

R - 1 WORKSHOP A

The first workshop set shall be presented by a technical specialist thoroughly familiar with the WCBBP Telemetry System Phase IIB. This workshop is not intended to show exact operation of the telemetry system but mainly to demonstrate telemetry functionality and confirm the direction of the interface and application development. The Contractor shall provide in-field and hands on training as necessary. The workshop shall

accommodate 10 to 15 people, shall allow for open discussion with Public Works personnel, and shall address the following:

1. Telemetry system graphical user interface alternatives and their development at each location.

2. The software and operator screens.

3. The telemetry system integration programming with the existing Public Works' Headquarters telemetry server and SBTS.

4. Methodologies for data acquisition and maintenance of the telemetry system.

5. The required standards, screen appearance, and functionality developed for the operator interfaces.

6. A simulated demonstration of the operator interfaces prior to final installation at the jobsite and prior to integration into the existing SBTS.

R - 2 WORKSHOP B

The second workshop set shall also be presented by a technical specialist thoroughly familiar with WCBBP Telemetry System Phase IIB. The workshop shall be performed after integration completion and after completion of Task 7: Software Programming/Configuration, Integration, and Testing. The Contractor shall show performance of the WCBBP Telemetry System Phase IIB and shall train Public Works Personnel. This training will involve education on each instrument and network hardware function and maintenance. The Contractor shall also plan to visit various jobsites to show hands on use and programming of the WCBBP Telemetry System Phase IIB. The workshop shall also present screen navigation of the SBTS program and use of the developed application.

S. TASK 10: FINAL ACCEPTANCE, SYSTEM MAINTENANCE AND SUPPORT

S - 1 FINAL TESTING

Prior to Final Testing, the Contractor must submit an Acceptance Test Plan that is mutually approved by County and vendor prior to commencing testing to verify that the WCBBP Telemetry System Phase IIB meets the requirements and specifications.

Once all of the WCBBP Telemetry System Phase IIB monitoring components are installed and functional, the Contractor shall perform testing in accordance with the Acceptance Test Plan and must include an I/O verification. This test shall verify that the field signals are wired properly and the various components function correctly to provide necessary signals to and from the RIOs and PLCs. The Contractor shall prepare for this test a sheet, listing in tabular format all relevant signals to be monitored by the telemetry system. This sheet shall provide a space wherein both the Contractor and the Contract Manager may sign and date the completion of final testing. Public Works reserves the right to require the Contractor to repeat testing, or to repeat internal testing in order to validate the data.

The WCBBP Telemetry System Phase IIB shall be integrated with the existing telemetry server and SBTS. Integration testing of the telemetry system shall be performed prior to final completion of the project. All telemetry system components must be installed including the optional wells and facilities that are given approval as described under subsection C-2. System integration shall ensure that all components of the telemetry system are functional and that all instruments respond to manual or automatic probing. It will also ensure that the WCBBP Telemetry System Phase IIB data can be monitored at Alamitos Yard, El Segundo Yard, Redondo Yard, Dominguez Yard, and Public Works Headquarters. The Contractor shall satisfactorily prove to Public Works that the WCBBP Telemetry System Phase IIB is fully operational.

The Final Acceptance Test Plan shall include, but not be limited to, the following:

- Successful installation of all telemetry system components.
- Successful I/O verification.
- Proper wiring.
- Proper field signals.

- Correct functionality of each component.
- Successful instrument response to manual or automatic probing.
- Successful real-time data monitoring at Alamitos Yard, Dominguez Yard, El Segundo Yard, Redondo Yard, and Public Works Headquarters.
- WCBBP Telemetry System Phase IIB is fully operational and is integrated with the SBTS.
- Any other reasonable requirements deemed necessary by the Contract Manager.

The Contractor shall submit the Final Acceptance Test Plan to the Contract Manager for review. Payment for this deliverable shall not be made until the Final Acceptance Test Plan has been reviewed and approved by the Contract Manager.

S - 2 AS-BUILT DRAWINGS

Contractor shall maintain at the jobsite a separate and complete set of Exhibit B, Plans, which will be used solely for the purpose of recording changes made in any portion of the work during the course of installation, regardless of the reason for such change. Changes, as they occur, will be marked on the approved set of Plans on a daily basis. The payment for each task will be withheld until Public Works has verified that "as-built" corrections are current. Before final payment is authorized, Contractor shall certify that all changes in the work are included on the Plans and shall deliver such to Public Works.

S - 3 RECORD DRAWINGS

1. Contractor shall prepare record drawings based on the "as-built" drawings maintained by the Contractor during installation. The record drawings shall indicate the locations of telemetry conduits, RIO cabinets, instrumentation schedules, power subsystems, observation wells, injection wells, pull boxes, and other appurtenant structures to scale. Record drawings shall be in electronic form utilizing the design drawings and as-built markings on plans.

2. Contractor shall prepare a record set of specifications documenting all equipment, installation, materials, and installation methods. For all installed equipment, the name of the manufacturer and model number shall be specified.

3. Contractor shall create and maintain detailed as-built plans and specifications throughout the duration of the project, and shall document in detail their work procedures, sequences of events, methodologies, calibration, testing, and programming. This documentation shall be such that an outside Contractor could utilize the documentation to satisfactorily duplicate or repeat the work on this or similar telemetry projects. The documentation shall be compiled into a report titled "Process Documentation" and submitted as a deliverable item.

S - 4 UPDATED EXHIBIT F, EQUIPMENT LIST

The Contractor shall update and/or modify Exhibit F, Equipment List as needed. The complete WCBBP Telemetry System Phase IIB, including all components, shall be designated in the updated Equipment List. All spare components shall be turned over to Public Works at Final Acceptance and shall be demonstrated to be in good working order.

S - 5 60 DAY DEFICIENCY-FREE OPERATION

The Contractor shall demonstrate to Public Works the operation of the WCBBP Telemetry System Phase IIB for 60 consecutive days without deficiencies. The Contractor shall repair any deficiency that they encounter and any deficiency identified by the Contract Manager. The Contractor shall follow the guidelines for maintenance services as identified in Exhibit G, Maintenance and Support. Depending on the severity of the deficiency, the Contractor Manager may use their discretion to determine if the deficiency will result in a restart of the 60 consecutive day deficiency-free period. The Contractor shall submit documentation demonstrating the continuous smooth operation for the required 60 day period. Final Acceptance of the project will be granted at the conclusion of the 60 day period and when all tasks have been completed to the Contract Manager’s satisfaction.

S - 6 UPDATED EXHIBIT F, EQUIPMENT LIST

The Contractor shall update and/or modify Exhibit F, Equipment List as needed. The complete WCBBP Telemetry System Phase IIB, including all components, shall be designated in the updated Equipment List. All spare components shall be turned over to Public Works at Final Acceptance and shall be demonstrated to be in good working order.

S - 7 MAINTENANCE

The Contractor shall maintain all instrumentation and components associated with the WCBBP Telemetry System Phase IIB during the duration of the contract and for a 1 year warranty period from the date of Final Acceptance. The Contractor shall be responsible for all costs associated with maintenance and shall replace all damaged or malfunctioning instruments and components of the telemetry system at no cost to Public Works. The Contractor is also responsible for fixing any software bugs or issues associated with the WCBBP Telemetry System Phase IIB. The Contractor shall follow the guidelines for maintenance services as identified in Exhibit G, Maintenance and Support. The complete WCBBP Telemetry System Phase IIB and all spare equipment designated in the equipment list shall be turned over to Public Works at the end of this contract and shall be demonstrated to be in good working order.

T. SCHEDULE OF TASKS AND DELIVERABLES

Task No. 1 - Project Management	
Item	**Deliverable Description**
J-1	Work Schedule
J-2	Management Meetings
ACCEPTANCE CRITERIA:	Public Works' Contract Manager has received all supporting information, and has reviewed and approved such information.

Task No. 2 - Submittals	
Item	**Deliverable Description**
K-1.1	Working Drawings
K-1.2	Shop Drawings
K-1.3	Supporting Information for Exhibit F, Equipment List (including updates, if applicable)
K-1.4	Acceptance Test Plan
ACCEPTANCE CRITERIA:	Public Works' Contract Manager has received all drawings, supporting information, and test plan, and has reviewed and approved them.

Task No. 3 - Permits	
Item	**Deliverable Description**
L-1	All permits and respective payments for all inspections by governing authorities as necessary to complete the objectives and requirements of this Scope of Work.
ACCEPTANCE CRITERIA:	Public Works' Contract Manager has received both hard and electronic copies of all required permits and permissions and all supporting documentation including invoices and receipts.

Task No. 4 – Conduit, Conductor, and Wire Installation	
Item	**Deliverable Description**
M-1 to M-2	Installation of Conduit
M-1 to M-2	Installation of Power Conductors
M-1 to M-2	Installation of Signal and Control Wires
M-1 to M-2	Installation of all Fiber Optic Cable (Communications Cable) from new RIOs to the existing 4T-RIO site.
M-1 to M-2	Installation of Above Ground RIO Panels
M-1 to M-2	Installation of Below Ground Instrument Panels
M-1 to M-2	Installation of Below Ground Instrument Panel Accessories
M-1 to M-2	Installation of Pull Boxes
ACCEPTANCE CRITERIA:	Public Works' Contract Manager has received all materials including the following: <u>SEGMENT 1</u> 250 LF Trenching at RIO-4R/4K/4C/3Z (Item no. 1) 900 LF PVC Conduit (Item no. 3) 27,000 LF Power and Control Cable (Item nos. 4) 13,500 LF Signal Cable (Item no. 5) 6000 LF Communications Cable (Item no. 6) 4 EA Above Ground RIO Cabinets (Item no. 7) 10 EA Below Ground Instrument Panels (Item no. 8) <u>SEGMENT 2</u> 200 LF Signal Cable (Item no. 5) 3 EA Below Ground Instrument Panels (Item no. 8) <u>SEGMENT 3</u> 600 LF Signal Cable (Item no. 5) <u>SEGMENT 4 (Optional)</u> 700 LF Trenching at Well 7BE0.1 (Item no. 1) 1 EA Pull Box (Item no. 2) 700 LF PVC Conduit (Item No. 3) <u>SEGMENT 5</u> 8,000 LF Power and Control Cable (Item nos. 4) 11,400 LF Signal Cable (Item no. 5) 11 EA Below Ground Instrument Panels (Item no. 8) **The items identified are also shown in Exhibit F, Equipment List*

Task No. 4 – Conduit, Conductor, and Wire Installation	
Item	**Deliverable Description**
ACCEPTANCE CRITERIA:	<u>Below Ground Instrument Panel accessories (SEGMENTS 1, 2, & 5)</u> 2100 LF of A-Best FlorTube 1/4" tubing AB-T4-TEFFEP-062 (Item no. 9) 300 LF of A-Best FlorTube 3/8” tubing AB-T6-TEFFEP-062 (Item no.10) 300 LF of A-Best Hose protect cover AB-T6-PROTECT 3/8" ID (Item no.11) 124 EA of DK-LOK V15B-D-4T-A-S; SS needle valve 90d 1/4" male (Item no.12) 124 EA of DK-LOK DCP-4-S; SS port connector (Item no.13) 228 EA of DK-LOK DT-4-S; SS 1/4" OD tee NPT (Item no.14) 124 EA of DK-LOK DAF4-4N-S; SS 1/4" female adapter (Item no.15) 276 EA of DK-LOK DUB4-S; SS Bulkhead connectors (Item no.16) 13 EA of DK-LOK DT-6-S; SS 3/8" OD tee NPT (Item no.17) 13 EA of DK-LOK DUB6-S; SS Bulkhead connectors (Item no.18) 13 EA of DK-LOK DR4-6; SS Port reducer 1/4" x 3/8" (Item no.19) 13 EA of DK-LOK DQBB-D-6T-S; SS Quick connect body 3/8" OD (Item no.20) 13 EA of DK-LOK DQSB-M-4N-S; SS Quick connect stem 1/4" male NPT (Item no.21) 13 EA of DK-LOK DMC6-6N-S; SS Connector 3/8" OD x 3/8" male NPT (Item no.22) **The items identified are also shown in Exhibit F, Equipment List*

Task No. 5 – Sensor Installation, Calibration, and Testing	
Item	**Deliverable Description**
N-1 to N-2	Installation of all new sensors
N-3	Calibration and testing of all newly installed sensors.
ACCEPTANCE CRITERIA:	Public Works' Contract Manager has received all results of manual field testing versus automatic sensors for monitoring attributes. Also, contractor has provided a complete set of functioning sensors, including the following: <u>SEGMENT 1</u> 29 EA Water Level Sensors (Item no. 23) 5 EA Termination Enclosure for Water Level Sensor (Item no. 24) 20 EA Injection Well Head Pressure Sensors (Item no. 25) 20 EA Injection Well Differential Pressure Sensors (Item no. 26) 10 EA Injection Well Packer Pressure Sensors (Item no. 27) 10 EA Flood Switches (Item no. 28) <u>SEGMENT 2</u> 6 EA Water Level Sensors (Item no. 23) 6 EA Injection Well Head Pressure Sensors (Item no. 25) 6 EA Injection Well Differential Pressure Sensors (Item no. 26) 3 EA Injection Well Packer Pressure Sensors (Item no. 27) 3 EA Flood Switches (Item no. 28) <u>SEGMENT 3</u> 1 EA Water Level Sensors (Item no. 23) 1 EA Termination Enclosure for Water Level Sensor (Item no. 24) <u>SEGMENT 4</u> 3 EA Water Level Sensors (Item no. 23) 2 EA Termination Enclosure for Water Level Sensor (Item no. 24) <u>SEGMENT 5</u> 17 EA Water Level Sensors (Item no. 23) 3 EA Termination Enclosure for Water Level Sensor (Item no. 24) 11 EA Injection Well Head Pressure Sensors (Item no. 25) 7 EA Injection Well Differential Pressure Sensors (Item no. 26) 11 EA Flood Switches (Item no. 28) **The items identified are also shown in Exhibit F, Equipment List*

Task No. 6 – Telemetry System Installation and Testing	
Item	**Deliverable Description**
O-1 to O-2	Installation and wiring of new RIO(s) and appurtenances
O-3	Testing, documentation, and demonstration of functionality for RIO(s) and appurtenances
ACCEPTANCE CRITERIA:	Public Works' Contract Manager has received a complete and functioning RIO system, including the following: <u>SEGMENT 1</u> 4 EA RIO back panels with appropriate I/O modules, power supplies, terminal blocks, wire management components, communication components, and protective devices (Item no. 29) 4 EA Interface Module ET 200S IM 151-3PN (Item no. 30) 4 EA Power Module ET 200S PM-E (Item no. 31) 4 EA Terminal Module ET 200S TM-P15S23-A0 (Item no. 32) 4 EA Digital Electric Module ET 200S 8DI DC 24V (Item no. 33) 4 EA Terminal Module ET 200S TM-E15S24-01 (Item no. 34) 16 EA Analog Electronic Module ET 200S 4AI 2-Wire ST (Item no. 35) 16 EA Terminating Module (End Cap) ET 200S (Item no. 36) 4 EA Ethernet Switch Single Mode Fiber Scalance X204-2LD (Item no. 37) 4 EA 24VDC Power Supply (Item no. 38) 4 EA Terminal Block Sets (Item no. 39) 4 EA RIO Fiber Optic Termination (Item no. 40) 4 EA Surge Suppressor (Item no. 41) 12 EA AC Circuit Breakers (Item no. 42) 12 EA DC Circuit Breakers (Item no. 43) **The items identified are also shown in Exhibit F, Equipment List*

Task No. 7 –Software Programming/Configuration, Integration, and Testing	
Item	**Deliverable Description**
P-1.b	Program all RIO's and related appurtenances so the WCBBP Telemetry System Phase IIB operates as outlined in the Scope of Work and it integrates seamlessly with the existing SBTS.
P-1.c	Program existing PLCs on the WCBBP to connect and integrate with the RIOs and instrumentation associated with the WCBBP Telemetry System Phase IIB.
P-1.d	Configuration of new HMI screens for the WCBBP Telemetry System Phase IIB modeled after the existing SBTS utilizing the existing telemetry server and WinCC software version 7.0, or newer.
P-1.e	Configuration of existing HMI workstations at Alamitos Yard, Dominguez Yard, El Segundo Yard, and Redondo Yard.
P-1.f	Configuration of existing alarm management software at Public Works' Headquarter Water Resources Division Blue Room.
P-1.g	Upgrade server licenses at Public Works' Headquarters Water Resources Division Blue Room and field HMI workstations as needed to allow monitoring of signals from WCBBP Telemetry System Phase IIB and any anticipated future SBTS projects.
P-1.h	Testing, Documentation and demonstration of functionality of the complete SBTS to monitor and analyze the collected data.
ACCEPTANCE CRITERIA:	Contractor has provided completed and functional interface screens for the WCBBP Telemetry System Phase IIB. In addition, the Contractor shall provide all supporting documentation for the cost of the software licenses, if needed, including invoices, receipts, warranties, manuals, and license certificates that is suitable for monitoring and analyzing the collected data.

Task No. 8 – O&M Manuals	
Item	**Deliverable Description**
Q-1 to Q-5	Operation and Maintenance Manuals (3 hard copies and 1 electronic copy in CD format) as structured and described in Scope of Work Section Q.
ACCEPTANCE CRITERIA:	Public Works' Contract Manager has received and approved the Operation and Maintenance Manual (three hard copies and one electronic copy)

Task No. 9 – Technical Workshops	
Item	**Deliverable Description**
R-1	Technical Workshop to demonstrate telemetry functionality and confirm the direction of the interface and application development. Workshop to present the proposed graphical interface, software, operator screens, system integration programming, operation and maintenance, standards and functionality, and necessary simulations.
R-2	Technical Workshop to demonstrate system performance. Workshop to include training for Public Works personnel on each instrument, network hardware function, maintenance, and must demonstrate hands-on use of programming and screen navigation.
ACCEPTANCE CRITERIA:	Public Works has received necessary workshop(s), confirmed that system functionality has been sufficiently demonstrated, confirmed planned operation and maintenance, confirmed interface screens and programming direction, and confirmed all other discussed issues. Public Works has received necessary workshop(s), and confirmed that ample training and hands-on site visit demonstrations have been received to operate the SBTS including the WCBBP Telemetry System Phase IIB effectively.

Task No. 10 – Final Acceptance, System Maintenance and Support	
Item	**Deliverable Description**
S-1	Final Testing
S-2	As-Built Drawings
S-3	Record Documents and Process Documentation
S-4	Updated Exhibit F, Equipment List
S-7	Contractor's commitment to provide system maintenance and support for one full year from Final Acceptance.
ACCEPTANCE CRITERIA:	Public Works has received and approved the Final Acceptance Test Plan, including all the Contractor's tabular test sheets and all supporting documentation demonstrating the fully functional and operational WCBBP Telemetry System Phase IIB. Public Works has received and approved the As-Built record documentation, Records Documents and Process Documentation, and Updated Equipment List. Public Works has received and approved documentation demonstrating the continuous smooth operation for the required 60 day period. Public Works shall receive in writing the Contractor's commitment to provide maintenance and support for the required one year period from the date of Final Acceptance.

COUNTY OF LOS ANGELES
DEPARTMENT OF PUBLIC WORKS

WEST COAST BASIN BARRIER PROJECT
TELEMETRY SYSTEM - PHASE II B

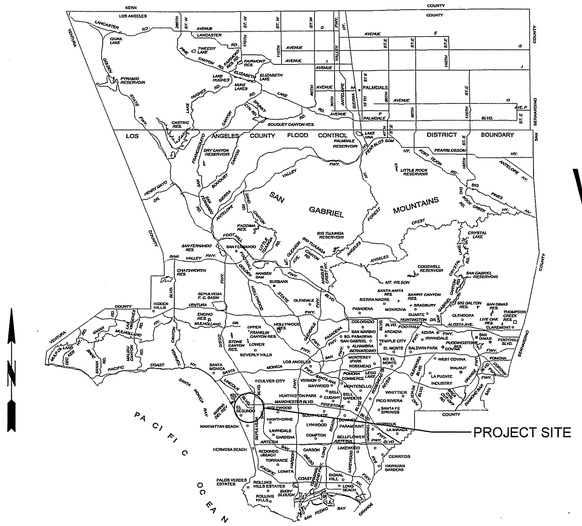

LOCATION MAP

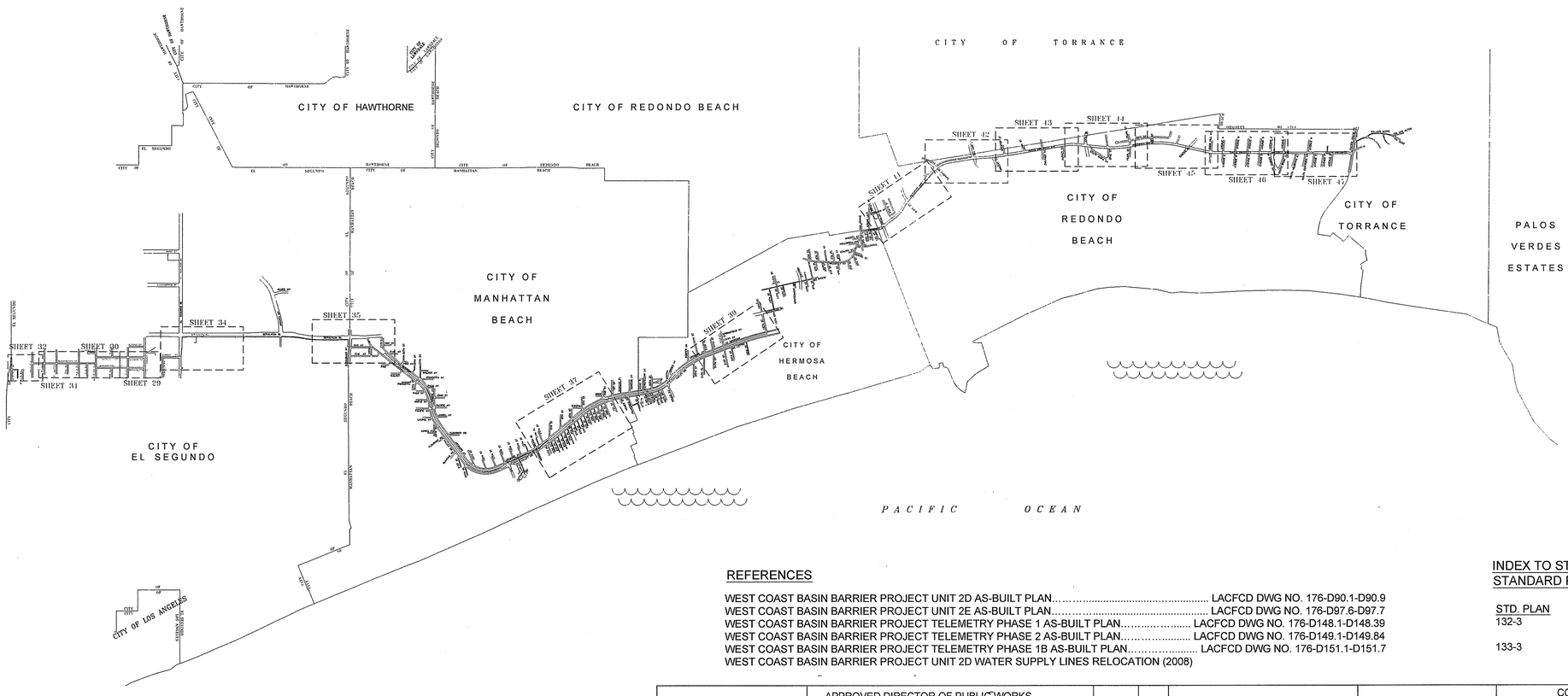

Sheet Number	Title
1	TITLE SHEET, LOCATION MAP & INDEX
2	SYMBOLS AND ABBREVIATIONS
3	WCBBP COMMUNICATION NETWORK DIAGRAM
4	BARRIER-WIDE COMMUNICATIONS NETWORK DRAWING
5	SEGMENT 1 NETWORK ARCHITECTURE DIAGRAM
6	SEGMENT 2 NETWORK ARCHITECTURE DIAGRAM
7	SEGMENT 3 NETWORK ARCHITECTURE DIAGRAM
8	SEGMENT 4 NETWORK ARCHITECTURE DIAGRAM
9	SEGMENT 5 NETWORK ARCHITECTURE DIAGRAM - 1
10	SEGMENT 5 NETWORK ARCHITECTURE DIAGRAM - 2
11	SEGMENT 1 ONE-LINE DIAGRAM -1
12	SEGMENT 1 ONE-LINE DIAGRAM -2
13	SEGMENT 2 ONE-LINE DIAGRAM
14	SEGMENT 3 ONE-LINE DIAGRAM - 1
15	SEGMENT 3 ONE-LINE DIAGRAM - 2
16	SEGMENT 4 ONE-LINE DIAGRAM - 1
17	SEGMENT 4 ONE-LINE DIAGRAM - 2
18	SEGMENT 5 ONE-LINE DIAGRAM -1
19	SEGMENT 5 ONE-LINE DIAGRAM -2
20	SEGMENT 5 ONE-LINE DIAGRAM -3
21	SEGMENT 5 ONE-LINE DIAGRAM -4
22	SEGMENT 5 ONE-LINE DIAGRAM -5
23	SEGMENT 5 ONE-LINE DIAGRAM -6
24	SEGMENT 5 ONE-LINE DIAGRAM -7
25	SEGMENT 5 ONE-LINE DIAGRAM -8
26	SEGMENT 5 ONE-LINE DIAGRAM -9
27	SEGMENT 5 ONE-LINE DIAGRAM -10
28	SEGMENT 1 OVERALL SITE PLAN VIEW
29	SEGMENT 1 PLAN WELL 4R, 4PR, 4P AND 4M
30	SEGMENT 1 PLAN WELL 4KM, 4K AND 4H
31	SEGMENT 1 PLAN WELL 4FH, 4F, 4E AND 4CE
32	SEGMENT 1 PLAN WELL 4C, 4A, 3ZA AND 3Z
33	SEGMENT 2 OVERALL SITE PLAN VIEW
34	SEGMENT 2 PLAN WELL 4W, 5B
35	SEGMENT 2 PLAN WELL 5M1
36	SEGMENT 3 OVERALL SITE PLAN VIEW
37	SEGMENT 3 PLAN WELL 6EH2
38	SEGMENT 4 OVERALL SITE PLAN VIEW
39	SEGMENT 4 PLAN WELL 7BE0.1
40	SEGMENT 5 OVERALL SITE PLAN VIEW
41	SEGMENT 5 PLAN WELL 8F
42	SEGMENT 5 PLAN WELL 8M1 AND 8T
43	SEGMENT 5 PLAN WELL 8Y, 9E AND 9F
44	SEGMENT 5 PLAN WELL 9J AND 9GJ
45	SEGMENT 5 PLAN WELL 9R1, 9U1 AND 9U1V1
46	SEGMENT 5 PLAN WELL 9XY
47	SEGMENT 5 PLAN WELL 10J1L
48	CONDUIT SCHEDULE AND PANEL SCHEDULE
49	SEGMENT 1 INSTRUMENT SCHEDULE - 1
50	SEGMENT 1 INSTRUMENT SCHEDULE - 2
51	SEGMENT 1 INSTRUMENT SCHEDULE - 3
52	SEGMENT 2-4 INSTRUMENT SCHEDULE
53	SEGMENT 5 INSTRUMENT SCHEDULE - 1
54	SEGMENT 5 INSTRUMENT SCHEDULE - 2
55	MISCELLANEOUS DETAILS - 1
56	MISCELLANEOUS DETAILS - 2
57	MISCELLANEOUS DETAILS - 3
58	MISCELLANEOUS DETAILS - 4
59	MISCELLANEOUS DETAILS - 5
60	WELL P&ID AND WIRING SCHEMATIC DETAILS - 1
61	WELL P&ID AND WIRING SCHEMATIC DETAILS - 2
62	TYPICAL ABOVE GROUND RIO PANEL ELEVATIONS
63	TYPICAL ABOVE GROUND RIO PANEL SCHEMATICS

REFERENCES

WEST COAST BASIN BARRIER PROJECT UNIT 2D AS-BUILT PLAN..... LACFCD DWG NO. 176-D90.1-D90.9
WEST COAST BASIN BARRIER PROJECT UNIT 2E AS-BUILT PLAN..... LACFCD DWG NO. 176-D97.6-D97.7
WEST COAST BASIN BARRIER PROJECT TELEMETRY PHASE 1 AS-BUILT PLAN..... LACFCD DWG NO. 176-D148.1-D148.39
WEST COAST BASIN BARRIER PROJECT TELEMETRY PHASE 2 AS-BUILT PLAN..... LACFCD DWG NO. 176-D149.1-D149.84
WEST COAST BASIN BARRIER PROJECT TELEMETRY PHASE 1B AS-BUILT PLAN..... LACFCD DWG NO. 176-D151.1-D151.7
WEST COAST BASIN BARRIER PROJECT UNIT 2D WATER SUPPLY LINES RELOCATION (2008)

INDEX TO STANDARD PLANS
STANDARD PLANS FOR PUBLIC WORKS CONSTRUCTION (SPPWC)

STD. PLAN	TITLE
132-3	CONCRETE PAVEMENT REPLACEMENT
133-3	ASPHALT CONCRETE PAVEMENT REPLACEMENT

DRAFTER	ALH
DESIGNER	NH
CHECKER	MK
CADD PART NUMBER	
REVIEWED BY	DATE

FILE NAME: SFILES

TETRA TECH
www.tetratech.com
17885 Von Karman Avenue, Suite 500
Irvine, California 92614
Phone: 949-809-5000

TWO DAYS BEFORE YOU DIG
CALL USA TOLL FREE
1-800-422-4133

APPROVED DIRECTOR OF PUBLIC WORKS
BY Gary Poldebrand 11-3-15
DEPUTY DIRECTOR DATE

RECOMMENDED
Christopher Stone 11-02-15
ASSISTANT DEPUTY DIRECTOR DATE

SUBMITTED
BY 10-21-15
DATE

DATE	BY	DESCRIPTION

REVISIONS

REGISTERED PROFESSIONAL ENGINEER MAYEN KASSAB No. E 15809 Exp. 12-31-16 ELECTRICAL STATE OF CALIFORNIA

PROJECT ENGINEER DATE

COUNTY OF LOS ANGELES DEPARTMENT OF PUBLIC WORKS

WEST COAST BASIN BARRIER PROJECT
TELEMETRY SYSTEM - PHASE II B
LOCATION MAP AND
GENERAL PLAN

PROJECT ID: FCC0001280 | PCA EF11715001 | DWG 176-D153.1 | SHEET: 1 OF 63

PLAN	ONE-LINE DIAGRAM	CONTROL DIAGRAM	DESCRIPTION
		ST	PUSHBUTTON, N.O. SHOWN, LETTERS INDICATE: A-AUTO, DN-DOWN, FWD-FORWARD, H-HAND, LOS-LOCK OUT STOP, O-OFF, REV-REVERSE, ST-START, SP-STOP, T-TEST
		AUTO OPEN CLOSE	SELECTOR SWITCH, "A" POSITION SHOWN. ARROW, WHEN USED, INDICATES SPRING RETURN, X'S AND O'S TO RIGHT OF CONTACTS, WHEN USED, INDICATE CONTACT DEVELOPMENT.
			FLOAT SWITCH, N.C. SHOWN. CONTACT OPENS ON RISING LEVEL AT PRESET VALUE.
			PRESSURE SWITCH, N.O. SHOWN. CONTACT CLOSES ON RISING PRESSURE AT PRESET VALUE.
			TEMPERATURE SWITCH OR THERMOSTAT N.C. SHOWN. CONTACT OPENS ON RISING TEMPERATURE AT PRESET VALUE
			LIMIT SWITCH, N.O. SHOWN. CONTACT CLOSES WHEN DEFLECTED
			FLOW SWITCH, N.O. SHOWN. CONTACT CLOSES ON INCREASING FLOW AT PRESET VALUE.
		2 CR	CONTROL DEVICE, LETTER INDICATES: CR-CONTROL RELAY, TR-TIME DELAY RELAY, CC-CLOSING COIL, TM-TIMER, TC-TRIP COIL. NUMBER IDENTIFIES RELAY
			NORMALLY OPEN WHICH CLOSES ON COIL ENERGIZATION
			NORMALLY CLOSED WHICH OPENS ON COIL ENERGIZATION
		1TR	NORMALLY OPEN WITH TIME DELAY CLOSING (ON DELAY)
		1TR	NORMALLY CLOSED WITH TIME DELAY OPENING (ON DELAY)
		1TR	NORMALLY OPEN WITH TIME DELAY OPENING (OFF DELAY)
		1TR	NORMALLY CLOSED WITH TIME DELAY CLOSING (OFF DELAY)
			CONTROL PANEL D.C. SIGNALS
			CONTROL PANEL A.C. SIGNALS
			MCC D.C. SIGNALS
			MCC A.C. SIGNALS
			DEVICE D.C. SIGNALS
			DEVICE A.C. SIGNALS
			FIELD WIRING
			ENCLOSURE WIRING
			ANTENNA
			CONDUIT SEAL OFF FITTING

PLAN	ONE-LINE DIAGRAM	CONTROL DIAGRAM	DESCRIPTION
HTR	75KW	75KW	HEATER, NUMBER INDICATES KW
X			DISCONNECT SWITCH (NON-FUSED)
			DISCONNECT SWITCH (FUSED)
	G		BUS CONNECTION (N=NEUTRAL, G=GROUND)
			CARTRIDGE FUSE AND FUSEHOLDER
			CARTRIDGE FUSE AND FUSEHOLDER W/BLOWN (AC) FUSE INDICATOR
	200/3	200	CIRCUIT BREAKER: 200A CURRENT SENSOR OR TRIP SETTING, 3 POLE SHOWN
		R	INDICATING LIGHT, LETTER INDICATES: R-RED, G-GREEN, A-AMBER, W-WHITE, B-BLUE
T			TRANSFORMER
		12vdc	BATTERY, NUMBER INDICATES POTENTIAL
			RECTIFIER OR DIODE
			GROUND CONNECTION
			CONDUCTORS NOT CONNECTED
			CONDUCTORS CONNECTED
			MECHANICAL CONNECTION, INTERLOCKS
			EQUIPMENT ENCLOSURE/ BOUNDARY
OR			SPECIAL PURPOSE RECEPTACLE, AS NOTED
KWH DEM	KWH VS	KWH VS	METER OR SWITCH, LETTER INDICATES: F-FREQUENCY METER, A-AMMETER, H-HOURMETER, PF-POWER FACTOR, T-TACHOMETER, V-VOLTMETER, VR-VARMETER, W-WATTMETER, VS-VOLTMETER SWITCH, AS-AMMETER SWITCH, DEM-DEMAND METER, KWH-WATTHOUR METER, (CIRCLE USED WITH METERS, SQUARE USED WITH SWITCHES)
			COIL SURGE SUPPRESSER
			POWER FACTOR CORRECTION CAPACITOR

PLAN	DESCRIPTION
A	CONDUIT CALLOUT. IF USED, SEE CONDUIT SCHEDULE
D122DF	EQUIPMENT CALLOUT. SEE SCHEDULE
1 / E2	DETAIL NUMBER DETAIL IDENTIFIER REFERENCE DRAWING NUMBER
LE 101	INSTRUMENT TYPE PER ISA INSTRUMENT IDENTIFIER INSTRUMENT NUMBER
	LIGHT LINE INDICATED EXISTING ELECTRICAL OR EXISTING EQUIPMENT. LIGHT LINE MAY ALSO BE USED FOR DETAIL DRAWING CLARITY.
	HEAVY LINE INDICATED NEW WORK
	EXISTING WORK TO BE REMOVED
	GROUND ROD AND WELL
	DUPLEX RECEPTACLE, GROUNDING TYPE
	CIRCUIT BREAKER PANELBOARD 208Y/120V OR 120/240V
	CONDUIT, CONCEALED IN FINISHED AREAS, EXPOSED IN UNFINISHED AREAS
	CONDUIT BELOW GRADE
	CONDUIT BENT UP OR TOWARD CONDUIT BENT DOWN OR AWAY
G	GROUND WIRE WITH CADWELD CONNECTION PIGTAILED 18" ABOVE FINISHED FLOOR
G	GROUND WIRE WITH CADWELD CONNECTION
J	JUNCTION BOX
T	THERMOSTAT (T-STAT)
TB	TERMINAL BOX, SIZE AS REQUIRED.
	FLEXIBLE CORD OR CABLE FLEXIBLE METALLIC CONDUIT
#	FLAG NOTE

ABBREVIATION	WORD
A, AMP	AMPERE
AFF	ABOVE FINISHED FLOOR
AHJ	AUTHORITY HAVING JURISDICTION
AIT	ANALYZER INDICATOR TRASMITTER
AUTO	AUTOMATIC
AUX	AUXILIARY
AWG	AMERICAN WIRE GAUGE
BLDG	BUILDING
C	CONDUIT
CB	CIRCUIT BREAKER
CCC	CONTROL AND COMMUNICATION CONDUIT
CKT	CIRCUIT
CNTL	CONTROL
CR	CONTROL RELAY
CT	CURRENT TRANSFORMER
CV	CHECK VALVE, CONTROL VALVE
(E)	EXISTING
EQUIP	EQUIPMENT
(F)	FUTURE
FE	FLOW SENSING ELEMENT
FS, FSL, FSH	FLOW SWITCH, LOW, HIGH
FT, FIT	FLOW TRANSMITTER, INDICATOR TRANSMITTER
GND	GROUND
GRS	GALVANIZED RIGID STEEL
HH	HAND HOLE
HOA, HOR	HAND-OFF-AUTO, HAND OFF REMOTE
HZ	HERTZ (CYCLES PER SECOND)
I/O	INPUT/OUTPUT
IT	CURRENT TRANSMITTER
J	JUNCTION BOX
LE	LEVEL SENSING ELEMENT
LT, LIT	LEVEL TRANSMITTER, INDICATOR TRANSMITTER
LS, LSH, LSL, LSHH, LSLL	LEVEL SWITCH, HIGH, LOW, HIGH HIGH, LOW LOW
LCP	LOCAL CONTROL PANEL
mA	MILLIAMPERES
MH	MAN HOLE
MTR,M	MOTOR
MTS	MANUAL TRANSFER SWITCH
N.C.	NORMALLY CLOSED
N.O.	NORMALLY OPEN
NTS	NOT TO SCALE
OCA	OPEN CLOSE AUTO
OL	OVERLOAD
PB	PUSH BUTTON
PH. Ø	PHASE
PNL	PANEL
PSI	POUNDS PER SQUARE INCH
PT, PIT	PRESSURE TRANSMITTER, INDICATOR TRANSMITTER
PS, PSH, PSL, PSHH, PSLL	PRESSURE SWITCH, HIGH, LOW, HIGH HIGH, LOW LOW
PVC	POLYVINYL CHLORIDE
REF	REFERENCE
REC	RECEPTACLE
S, SEC	SECOND
SPEC	SPECIFICATION
S.S.	STAINLESS STEEL
TB	TERMINAL BOX, TERMINAL BLOCK
TSP	TWISTED SHIELDED PAIR
TT,TIT	TEMPERATURE TRANSMITTER, INDICATOR TRANSMITTER
TYP	TYPICAL
UPS	UNINTERRUPTIBLE POWER SUPPLY
V	VOLTS
Vac or VAC	VOLTS ALTERNATING CURRENT
Vdc or VDC	VOLTS DIRECT CURRENT
W	WIRE
W/	WITH
W/O	WITHOUT
WP	WEATHER PROOF (NEMA 4)
XFMR	TRANSFORMER
ZS, ZSI, ZSV	POSITION SWITCH, INTRUSION, VALVE
ZSI	INTRUSION SENSING POSITION SWITCH

DATE | REVIEWED BY | CADD PART NUMBER | CHECKER MK | DESIGNER NH | DRAFTER ALH

TETRA TECH
www.tetratech.com
17885 Von Karman Avenue, Suite 500
Irvine, California 92614
Phone: 949-809-5000

DATE	BY	DESCRIPTION

REVISIONS

REGISTERED PROFESSIONAL ENGINEER
MATTHEW KASSAP
No. E 15809
Exp. 12-31-16
ELECTRICAL
STATE OF CALIFORNIA

PROJECT ENGINEER DATE

COUNTY OF LOS ANGELES DEPARTMENT OF PUBLIC WORKS

WEST COAST BASIN BARRIER PROJECT
TELEMETRY SYSTEM - PHASE II B
SYMBOLS AND ABBREVIATIONS

PROJECT ID: FCC0001280 | PCA EF11715001 | DWG 176-D153.2 | SHEET: 2 OF 63

FILE NAME: $FILE$

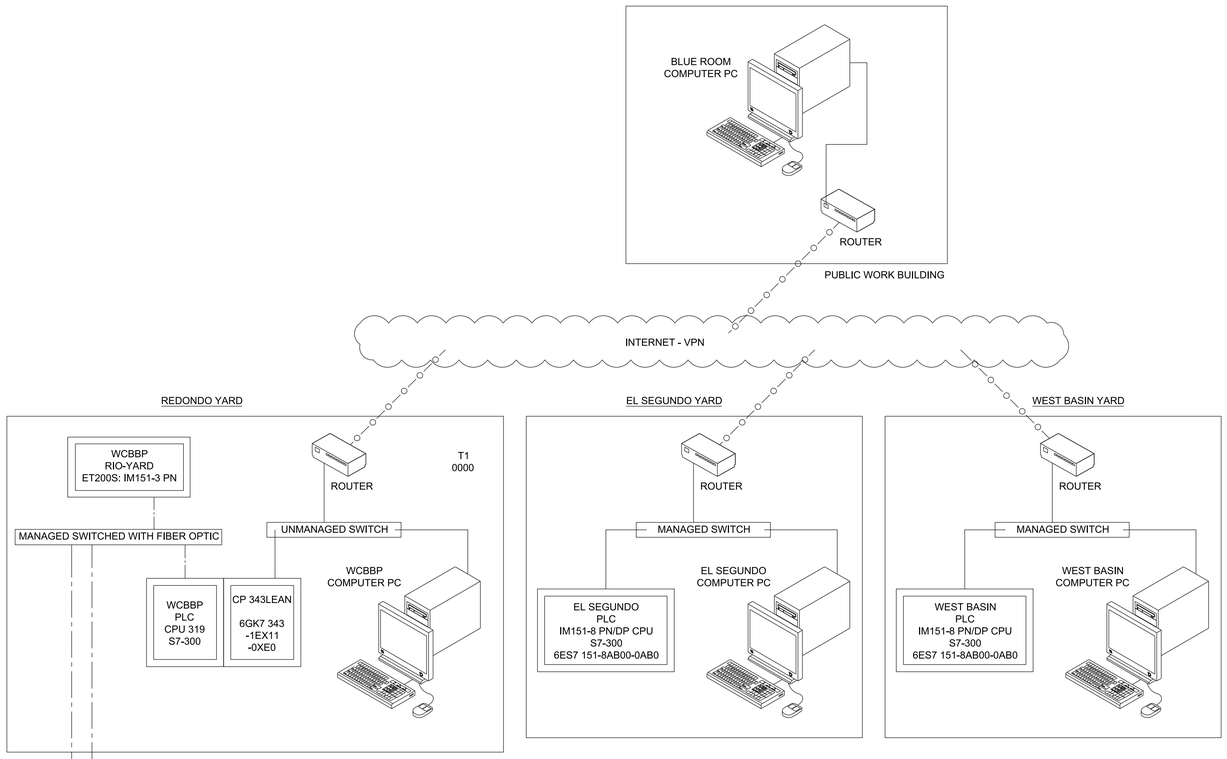

WCBBP TELEMETRY SYSTEM PHASE IIB			
SEGMENT	CITY	CABINET	WELL NAME
1	EL SEGUNDO	RIO-4R	IW-4R
			OW-4PR
			IW-4P
		RIO-4K	IW-4K
			OW-4KM
			IW-4M
			IW-4F
			OW-4FH
			IW-4H
		RIO-4C	IW-4C
			OW-4CE
			IW-4E
		RIO-3Z	IW-3Z
			OW-3ZA
			IW-4A
2	EL SEGUNDO	RIO-4W	IW-4W
		RIO-5B	IW-5B
		RIO-5L1	IW-5M1
3	MANHATTAN BEACH	RIO-6E	OW-6EH2
4	HERMOSA BEACH	RIO-7E	OW-7BE0.1*
5	REDONDO BEACH	RIO-8F2	IW-8F
		RIO-8M	IW-8M1
		RIO-8S	IW-8T
		RIO-8X	IW-8Y
		RIO-9D1	IW-9E
			IW-9F
		RIO-9G	IW-9J
			OW-9GJ(2)*
		RIO-9R	IW-9R1(LSP)*
			IW-9R1(SILV)*
		RIO-9U	OW-9U1V1*
			IW-9U1(LSP)*
			IW-9U1(SILV)*
		RIO-9X	OW-9XY
		RIO-10L	OW-10J1L*

LEGEND

GRAY LINE - EXISTING

BLACK LINE - PHASE IIB SCOPE OF WORK

T1 LINE

FIBER OPTIC (EXISTING)

FIBER OPTIC (NEW)

CAT 5 ETHERNET CABLE

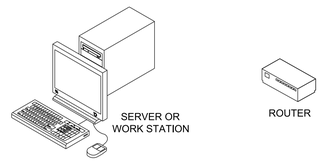

NOTE

1. EXISTING RIO TO BE MODIFIED
2. NEW RIO PANEL

* INDICATES OPTIONAL WELLS UNDER WCBBP PHASE IIB

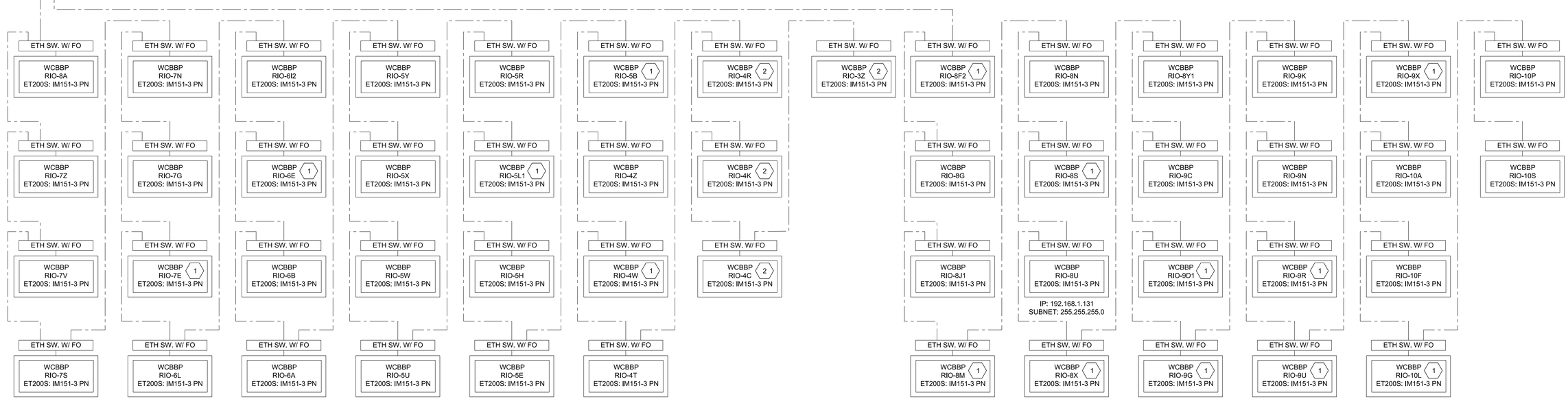

DATE	BY	DESCRIPTION

REVISIONS

REGISTERED PROFESSIONAL ENGINEER
MAYEN KASSAB
No. E 15809
Exp. 12-31-16
ELECTRICAL
STATE OF CALIFORNIA

PROJECT ENGINEER DATE

COUNTY OF LOS ANGELES DEPARTMENT OF PUBLIC WORKS

WEST COAST BASIN BARRIER PROJECT
TELEMETRY SYSTEM - PHASE II B
WCBBP COMMUNICATION
NETWORK DIAGRAM

PROJECT ID: FCC0001280 | PCA EF11715001 | DWG 176-D153.3 | SHEET: 3 OF 63

TETRA TECH
www.tetratech.com
17885 Von Karman Avenue, Suite 500
Irvine, California 92614
Phone: 949-809-5000

DRAFTER ALH | DESIGNER NH | CHECKER MK | CADD PART NUMBER | REVIEWED BY | DATE

FILE NAME: $FILEL$

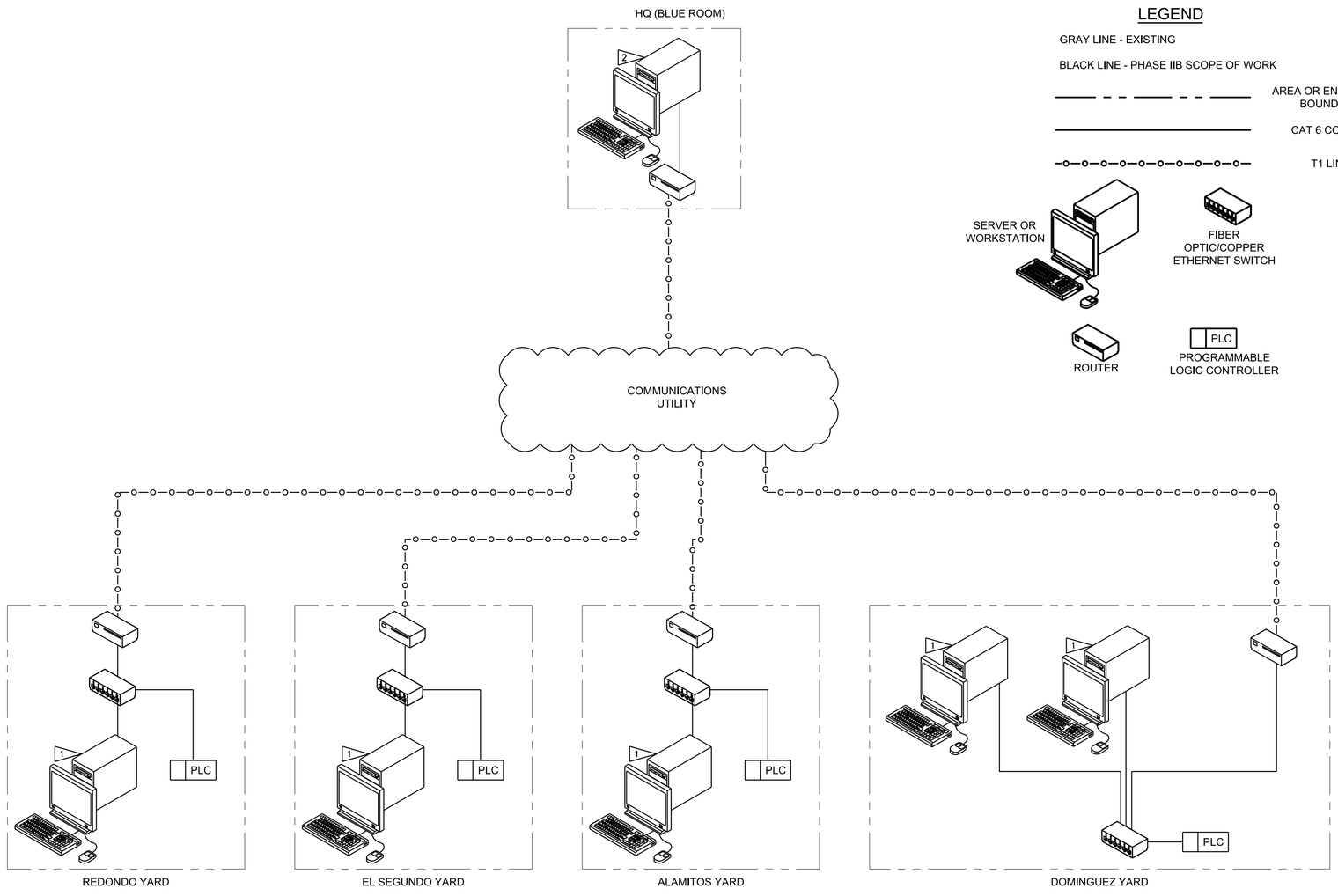

LEGEND

GRAY LINE - EXISTING

BLACK LINE - PHASE IIB SCOPE OF WORK

AREA OR ENCLOSURE BOUNDARY

CAT 6 COPPER

T1 LINE

SERVER OR WORKSTATION

FIBER OPTIC/COPPER ETHERNET SWITCH

ROUTER

PLC
PROGRAMMABLE LOGIC CONTROLLER

CONSTRUCTION NOTES

1. UPGRADE WINCC APPLICATION AT YARD HMI COMPUTERS TO ENABLE MONITORING OF WCBBP TELEMETRY PHASE IIB.
2. UPGRADE EXISTING DATABASES AND WINCC APPLICATION TO INCLUDE WCBBP TELEMETRY PHASE IIB.

DRAFTER	DESIGNER	CHECKER	CADD PART NUMBER	REVIEWED BY	DATE
ALH	NH	MK			

TETRA TECH
www.tetratech.com
17885 Von Karman Avenue, Suite 500
Irvine, California 92614
Phone: 949-809-5000

DATE	BY	DESCRIPTION

REVISIONS

REGISTERED PROFESSIONAL ENGINEER
NAZZEN F. SAYAH
No. E 15809
Exp. 12-31-16
ELECTRICAL
STATE OF CALIFORNIA

PROJECT ENGINEER DATE

COUNTY OF LOS ANGELES DEPARTMENT OF PUBLIC WORKS

WEST COAST BASIN BARRIER PROJECT
TELEMETRY SYSTEM - PHASE II B
BARRIER-WIDE COMMUNICATIONS
NETWORK DIAGRAM

PROJECT ID: FCC0001280 | PCA EF11715001 | DWG 176-D153.4 | SHEET: 4 OF 63

FILE NAME: $FILE$

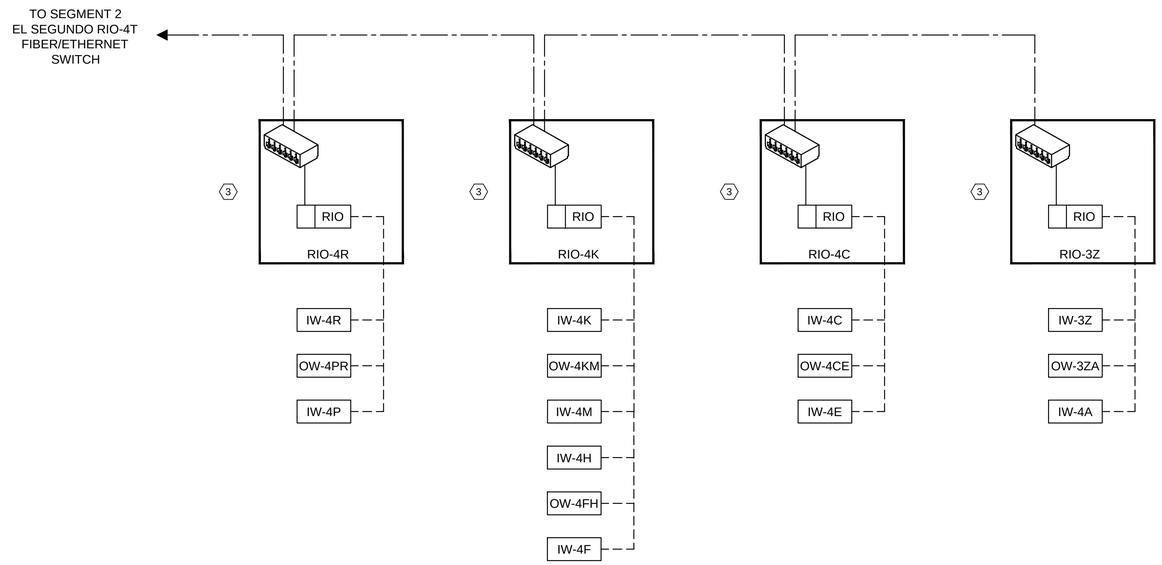

LEGEND

- AREA OR ENCLOSURE BOUNDARY
- FIBER OPTIC
- INSTRUMENT CABLE
- CAT 6 COPPER
- ABOVE GROUND RIO PANEL
- RIO — REMOTE I/O
- FIBER OPTIC/COPPER ETHERNET SWITCH
- XYZ — WELL

GRAY LINE - EXISTING

BLACK LINE - PHASE IIB SCOPE OF WORK

GENERAL NOTES:

1. SEE INSTRUMENT SCHEDULES (SHEET 49-51) AND SCHEMATICS (SHEET 60) FOR FIELD INSTRUMENT CONNECTION REQUIREMENTS.
2. SEE PLANS (SHEET 28-32) AND ONE LINES (SHEET 11-12) FOR HAND HOLE, WELL AND PULL BOX LOCATIONS.

CONSTRUCTION NOTES:

1. THE WELLS SHOWN HAVE UNDERGROUND CONDUITS INSTALLED, BUT REQUIRE POWER AND FIBER OPTIC CABLE FROM RIO-4T TO ALL RIO PANELS.
2. THESE WELLS ALSO REQUIRE NEW INSTRUMENTS AND INSTRUMENT CABLE FROM EACH WELL TO ASSIGNED RIO PANEL.

(3) NEW ABOVE GROUND RIO PANEL TO BE INSTALLED WILL REQUIRE TRENCHING TO INSTALL CONDUIT FROM RIO PANEL TO THE NEAREST PULL BOX. PROPOSED (2) 2-1/2" AND (1) 2" SCH 80 PVC CONDUITS BETWEEN RIO PANEL AND PULL BOX.

DRAFTER	DESIGNER	CHECKER	CADD PART NUMBER	REVIEWED BY	DATE
ALH	NH	MK			

TETRA TECH
www.tetratech.com
17885 Von Karman Avenue, Suite 500
Irvine, California 92614
Phone: 949-809-5000

DATE	BY	DESCRIPTION

REVISIONS

REGISTERED PROFESSIONAL ENGINEER — JAMEEN KASSAM — No. E 15809 — Exp. 12-31-16 — ELECTRICAL — STATE OF CALIFORNIA

PROJECT ENGINEER DATE

COUNTY OF LOS ANGELES DEPARTMENT OF PUBLIC WORKS

WEST COAST BASIN BARRIER PROJECT
TELEMETRY SYSTEM - PHASE II B
SEGMENT 1 NETWORK
ARCHITECTURE DIAGRAM

PROJECT ID: FCC0001280 | PCA EF11715001 | DWG 176-D153.5 | SHEET: 5 OF 63

FILE NAME: $FILE$

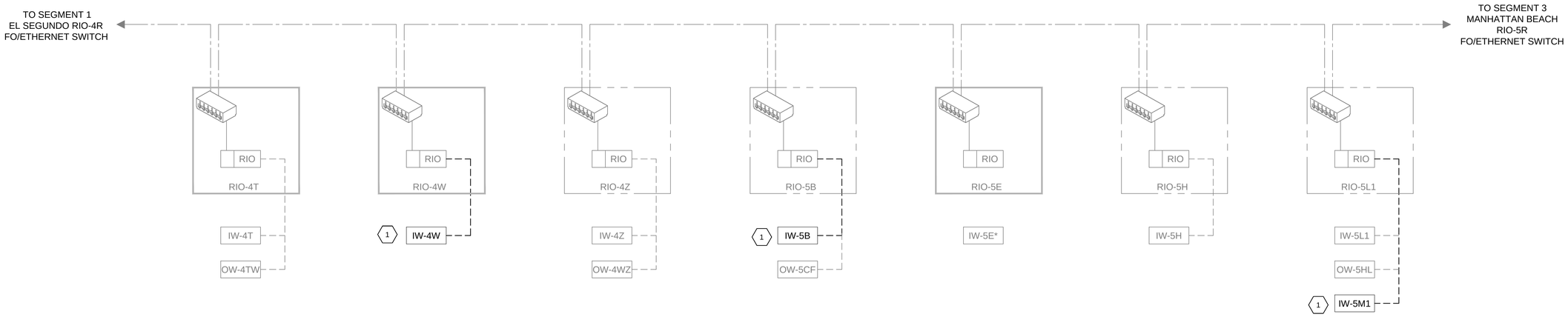

GENERAL NOTES:

1. SEE INSTRUMENT SCHEDULES (SHEET 52) AND SCHEMATICS (SHEET 60) FOR FIELD INSTRUMENT CONNECTION REQUIREMENTS.
2. SEE PLANS (SHEET 33-35) AND ONE LINES (SHEET 13) FOR HAND HOLE, WELL AND PULL BOX LOCATIONS.

CONSTRUCTION NOTES:

1 THESE WELLS HAVE POWER WIRES INSTALLED, BUT REQUIRE NEW INSTRUMENTS AND INSTRUMENT CABLE.

LEGEND

- AREA OR ENCLOSURE BOUNDARY
- FIBER OPTIC
- INSTRUMENT CABLE
- CAT 6 COPPER
- ABOVE GROUND RIO PANEL
- RIO — REMOTE I/O
- FIBER OPTIC/COPPER ETHERNET SWITCH
- XYZ — WELL

* INDICATES OPTIONAL WELL UNDER WCBBP PHASE II "OPTIONAL FACILITIES"

GRAY LINE - EXISTING

BLACK LINE - PHASE IIB SCOPE OF WORK

DRAFTER	DESIGNER	CHECKER	CADD PART NUMBER	REVIEWED BY	DATE
ALH	NH	MK			

TETRA TECH
www.tetratech.com
17885 Von Karman Avenue, Suite 500
Irvine, California 92614
Phone: 949-809-5000

DATE	BY	DESCRIPTION

REVISIONS

REGISTERED PROFESSIONAL ENGINEER
JAZEEN KASSEF
No. E 15809
Exp. 12-31-16
ELECTRICAL
STATE OF CALIFORNIA

PROJECT ENGINEER DATE

COUNTY OF LOS ANGELES DEPARTMENT OF PUBLIC WORKS

WEST COAST BASIN BARRIER PROJECT
TELEMETRY SYSTEM - PHASE II B
SEGMENT 2 NETWORK
ARCHITECTURE DIAGRAM

PROJECT ID: FCC0001280	PCA EF11715001	DWG 176-D153.6	SHEET: 6 OF 63

FILE NAME: $FILEL$

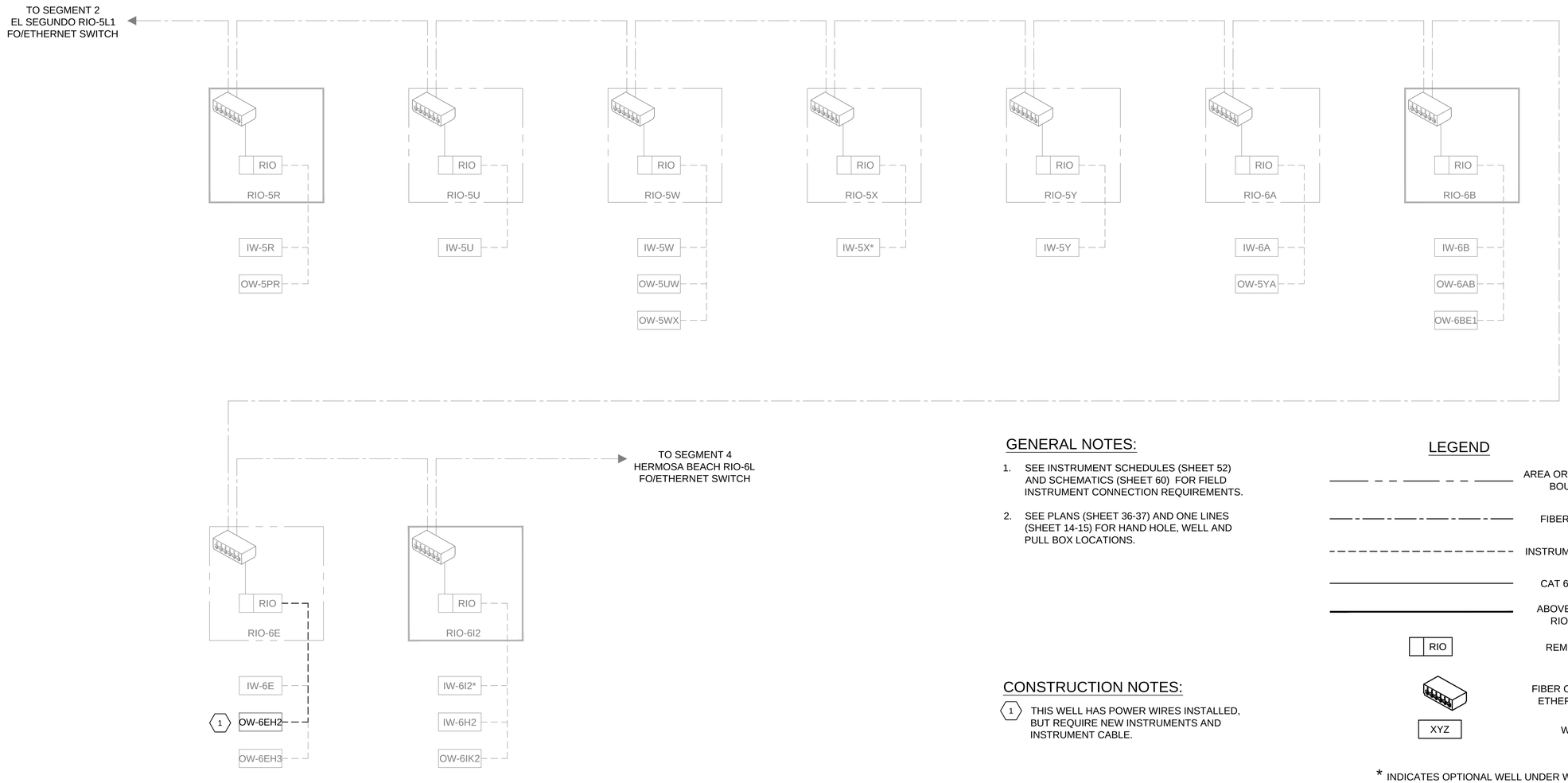

GENERAL NOTES:

1. SEE INSTRUMENT SCHEDULES (SHEET 52) AND SCHEMATICS (SHEET 60) FOR FIELD INSTRUMENT CONNECTION REQUIREMENTS.
2. SEE PLANS (SHEET 36-37) AND ONE LINES (SHEET 14-15) FOR HAND HOLE, WELL AND PULL BOX LOCATIONS.

CONSTRUCTION NOTES:

1. THIS WELL HAS POWER WIRES INSTALLED, BUT REQUIRE NEW INSTRUMENTS AND INSTRUMENT CABLE.

LEGEND

- AREA OR ENCLOSURE BOUNDARY
- FIBER OPTIC
- INSTRUMENT CABLE
- CAT 6 COPPER
- ABOVE GROUND RIO PANEL
- RIO — REMOTE I/O
- FIBER OPTIC/COPPER ETHERNET SWITCH
- XYZ — WELL

* INDICATES OPTIONAL WELL UNDER WCBBP PHASE II "OPTIONAL FACILITIES"

GRAY LINE - EXISTING

BLACK LINE - PHASE IIB SCOPE OF WORK

DRAFTER	DESIGNER	CHECKER	CADD PART NUMBER	REVIEWED BY	DATE
ALH	NH	MK			

TETRA TECH
www.tetratech.com
17885 Von Karman Avenue, Suite 500
Irvine, California 92614
Phone: 949-809-5000

DATE	BY	DESCRIPTION

REVISIONS

REGISTERED PROFESSIONAL ENGINEER — MAZEN N. KASSAB — No. E 15809 — Exp. 12-31-16 — ELECTRICAL — STATE OF CALIFORNIA

PROJECT ENGINEER DATE

COUNTY OF LOS ANGELES DEPARTMENT OF PUBLIC WORKS

WEST COAST BASIN BARRIER PROJECT
TELEMETRY SYSTEM - PHASE II B
SEGMENT 3 NETWORK
ARCHITECTURE DIAGRAM

PROJECT ID: FCC0001280 | PCA EF11715001 | DWG 176-D153.7 | SHEET: 7 OF 63

FILE NAME: $FILE$

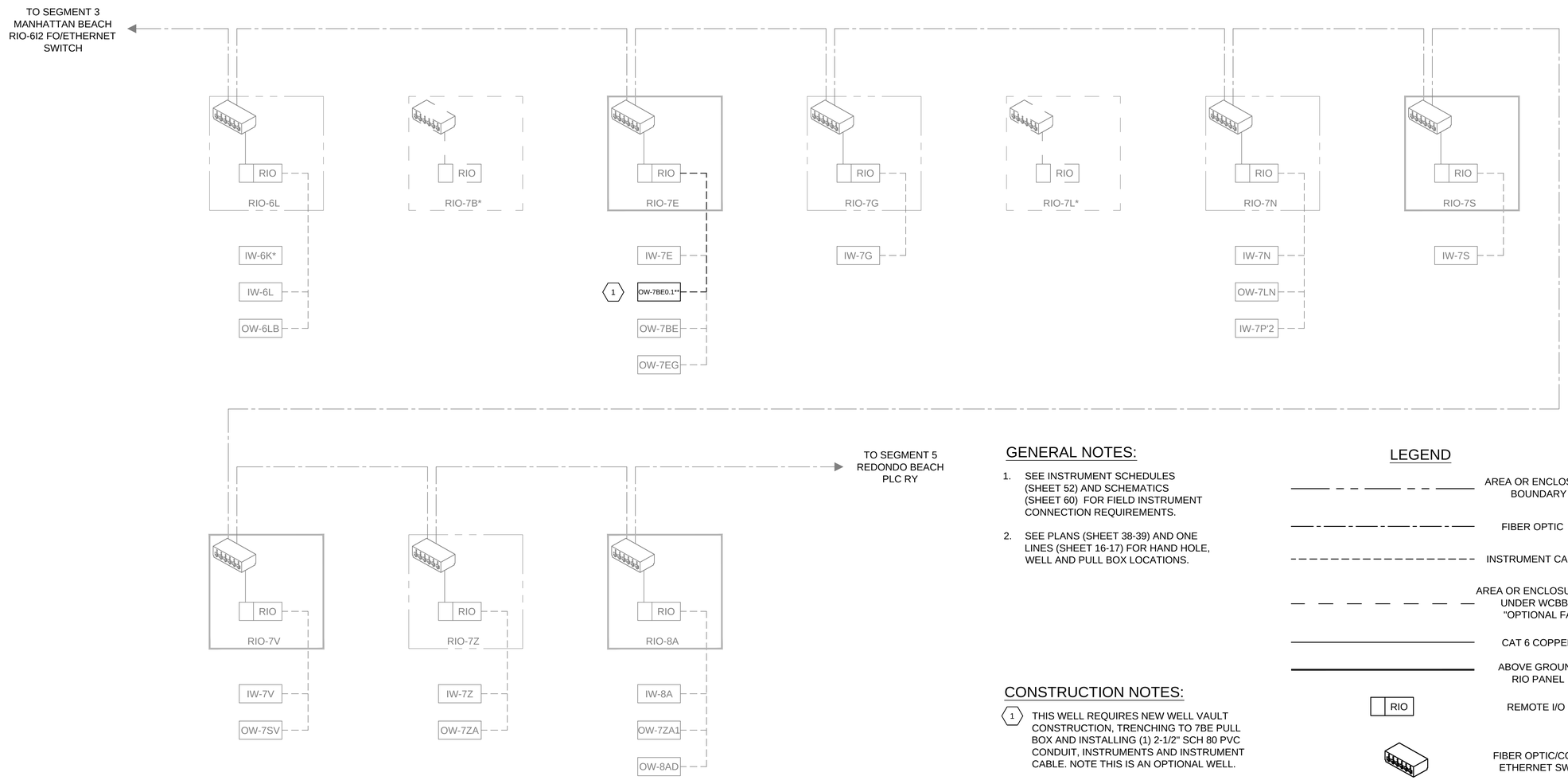

GENERAL NOTES:

1. SEE INSTRUMENT SCHEDULES (SHEET 52) AND SCHEMATICS (SHEET 60) FOR FIELD INSTRUMENT CONNECTION REQUIREMENTS.
2. SEE PLANS (SHEET 38-39) AND ONE LINES (SHEET 16-17) FOR HAND HOLE, WELL AND PULL BOX LOCATIONS.

CONSTRUCTION NOTES:

1. THIS WELL REQUIRES NEW WELL VAULT CONSTRUCTION, TRENCHING TO 7BE PULL BOX AND INSTALLING (1) 2-1/2" SCH 80 PVC CONDUIT, INSTRUMENTS AND INSTRUMENT CABLE. NOTE THIS IS AN OPTIONAL WELL.

LEGEND

- AREA OR ENCLOSURE BOUNDARY
- FIBER OPTIC
- INSTRUMENT CABLE
- AREA OR ENCLOSURE BOUNDARY UNDER WCBBP PHASE II "OPTIONAL FACILITIES"
- CAT 6 COPPER
- ABOVE GROUND RIO PANEL
- RIO — REMOTE I/O
- FIBER OPTIC/COPPER ETHERNET SWITCH
- XYZ — WELL

* INDICATES OPTIONAL WELL UNDER WCBBP PHASE II "OPTIONAL FACILITIES"

** INDICATES OPTIONAL WELL UNDER WCBBP PHASE IIB

GRAY LINE - EXISTING

BLACK LINE - PHASE IIB SCOPE OF WORK

DATE	BY	DESCRIPTION

REVISIONS

REGISTERED PROFESSIONAL ENGINEER
MATTEN KASSEF
No. E 15809
Exp. 12-31-16
ELECTRICAL
STATE OF CALIFORNIA

PROJECT ENGINEER DATE

COUNTY OF LOS ANGELES DEPARTMENT OF PUBLIC WORKS

WEST COAST BASIN BARRIER PROJECT
TELEMETRY SYSTEM - PHASE II B
SEGMENT 4 NETWORK
ARCHITECTURE DIAGRAM

PROJECT ID: FCC0001280 | PCA EF11715001 | DWG 176-D153.8 | SHEET: 8 OF 63

TETRA TECH
www.tetratech.com
17885 Von Karman Avenue, Suite 500
Irvine, California 92614
Phone: 949-809-5000

DRAFTER ALH | DESIGNER NH | CHECKER MK | CADD PART NUMBER | REVIEWED BY | DATE

FILE NAME: $FILE$

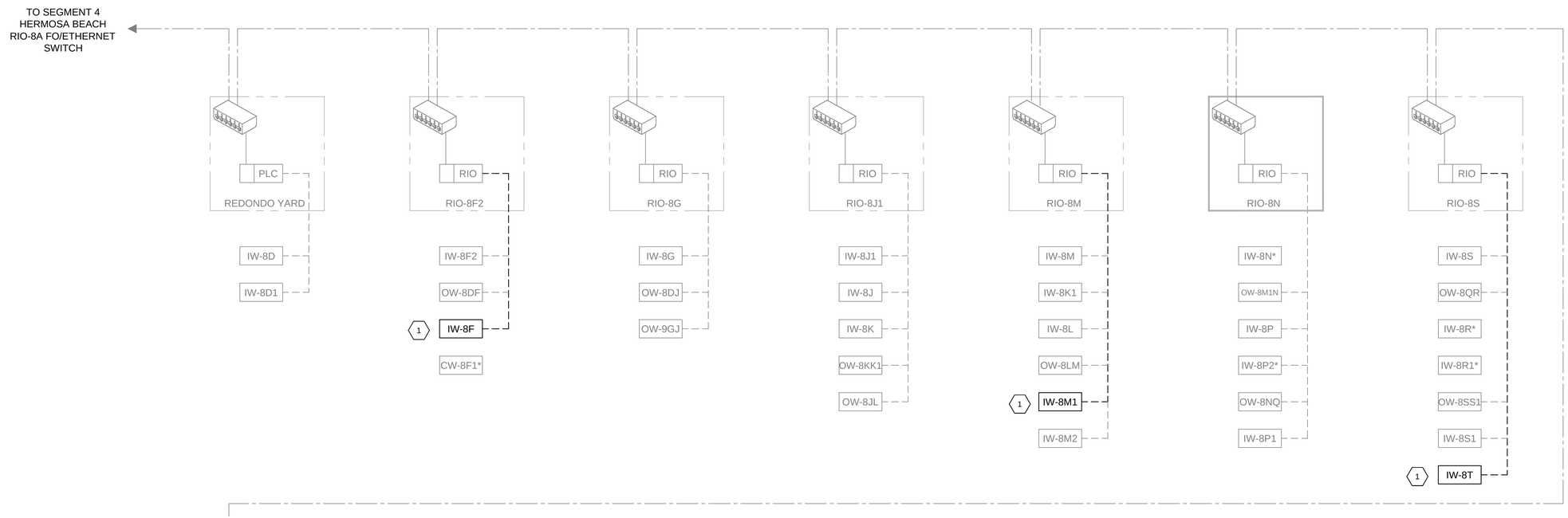

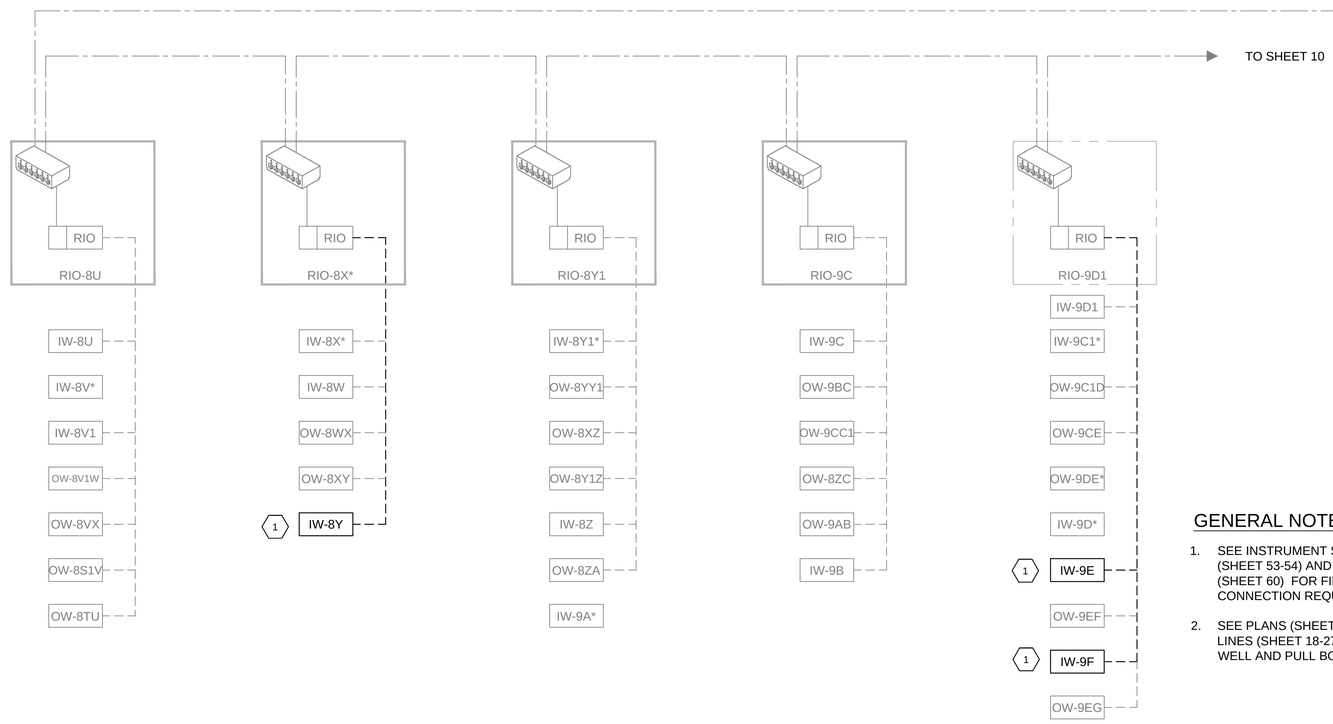

CONSTRUCTION NOTES:

1. THESE WELLS HAVE UNDERGROUND CONDUITS, BUT REQUIRE NEW INSTRUMENTS AND INSTRUMENT CABLE INSTALLED.

LEGEND

- AREA OR ENCLOSURE BOUNDARY
- FIBER OPTIC
- INSTRUMENT CABLE
- CAT 6 COPPER
- ABOVE GROUND RIO PANEL
- RIO — REMOTE I/O
- FIBER OPTIC/COPPER ETHERNET SWITCH
- XYZ — WELL

GENERAL NOTES:

1. SEE INSTRUMENT SCHEDULES (SHEET 53-54) AND SCHEMATICS (SHEET 60) FOR FIELD INSTRUMENT CONNECTION REQUIREMENTS.
2. SEE PLANS (SHEET 40-47) AND ONE LINES (SHEET 18-27) FOR HAND HOLE, WELL AND PULL BOX LOCATIONS.

* INDICATES OPTIONAL WELL UNDER WCBBP PHASE II "OPTIONAL FACILITIES"

GRAY LINE - EXISTING

BLACK LINE - PHASE IIB SCOPE OF WORK

DATE	BY	DESCRIPTION

REVISIONS

REGISTERED PROFESSIONAL ENGINEER — MAZEN KASSEM — No. E 15809 — Exp. 12-31-16 — ELECTRICAL — STATE OF CALIFORNIA

PROJECT ENGINEER DATE

COUNTY OF LOS ANGELES DEPARTMENT OF PUBLIC WORKS

WEST COAST BASIN BARRIER PROJECT
TELEMETRY SYSTEM - PHASE II B
SEGMENT 5 NETWORK
ARCHITECTURE DIAGRAM - 1

PROJECT ID: FCC0001280 | PCA EF11715001 | DWG 176-D153.9 | SHEET: 9 OF 63

DRAFTER ALH | DESIGNER NH | CHECKER MK | CADD PART NUMBER | REVIEWED BY | DATE

TETRA TECH
www.tetratech.com
17885 Von Karman Avenue, Suite 500
Irvine, California 92614
Phone: 949-809-5000

FILE NAME: $FILEL$

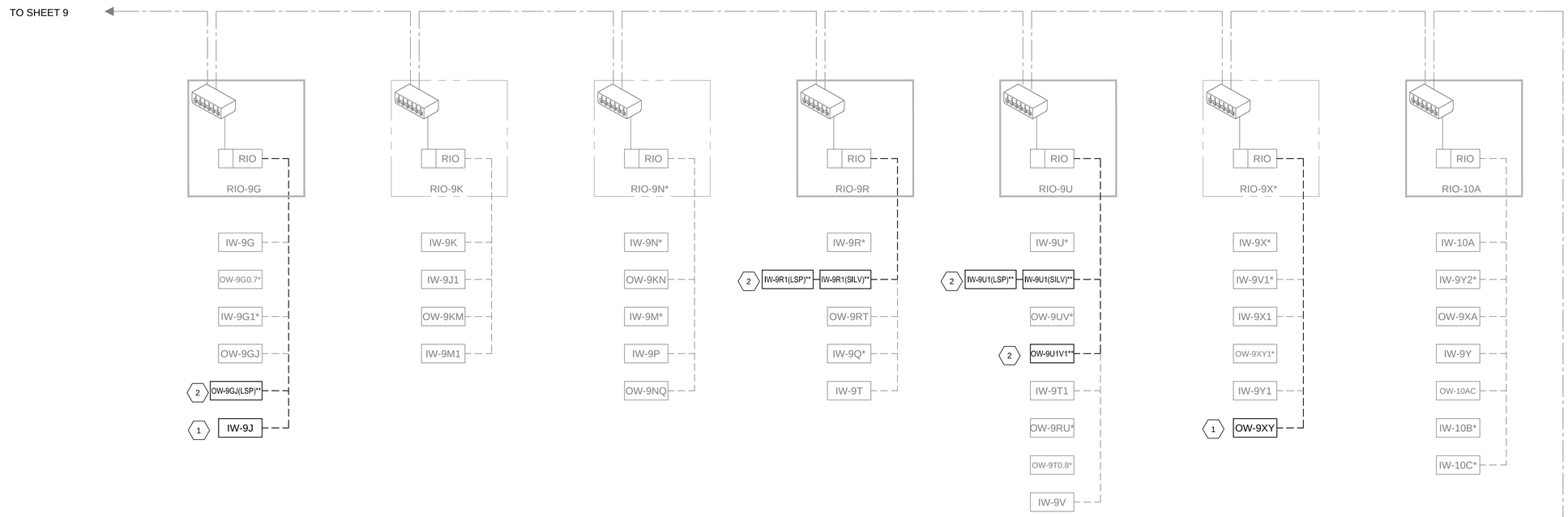

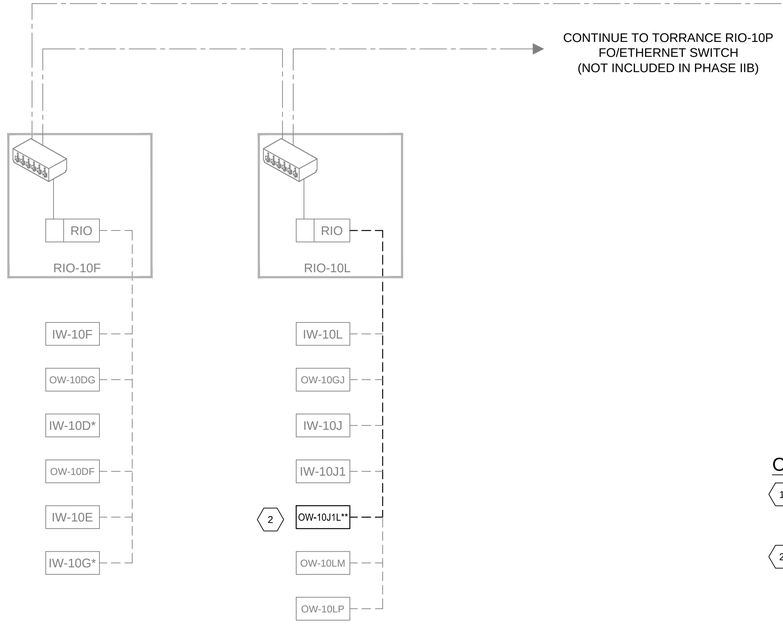

LEGEND

	AREA OR ENCLOSURE BOUNDARY
	FIBER OPTIC
	INSTRUMENT CABLE
	CAT 6 COPPER
	ABOVE GROUND RIO PANEL
RIO	REMOTE I/O
	FIBER OPTIC/COPPER ETHERNET SWITCH
XYZ	WELL

CONSTRUCTION NOTES:

1. THESE WELLS HAVE UNDERGROUND CONDUITS, BUT REQUIRE NEW INSTRUMENTS AND INSTRUMENT CABLE INSTALLED.

2. THESE ARE WELLS TO BE CONSTRUCTED UNDER A SEPARATE PROJECT AND WILL HAVE CONDUIT INSTALLED BUT REQUIRE INSTRUMENT CABLE AND NEW INSTRUMENTS. NOTE THAT THESE WELLS ARE OPTIONAL.

GENERAL NOTES:

1. SEE INSTRUMENT SCHEDULES (SHEET 53-54) AND SCHEMATICS (SHEET 60-61) FOR FIELD INSTRUMENT CONNECTION REQUIREMENTS.

2. SEE PLANS (SHEET 40-47) AND ONE LINES (SHEET 18-27) FOR HAND HOLE, WELL AND PULL BOX LOCATIONS.

* INDICATES OPTIONAL WELL UNDER WCBBP PHASE II "OPTIONAL FACILITIES"

** INDICATES OPTIONAL WELLS UNDER WCBBP PHASE IIB

GRAY LINE - EXISTING

BLACK LINE - PHASE IIB SCOPE OF WORK

DATE	BY	DESCRIPTION

REVISIONS

REGISTERED PROFESSIONAL ENGINEER
JOSEPH KASSOF
No. E 15809
Exp. 12-31-16
ELECTRICAL
STATE OF CALIFORNIA

PROJECT ENGINEER DATE

COUNTY OF LOS ANGELES DEPARTMENT OF PUBLIC WORKS

WEST COAST BASIN BARRIER PROJECT
TELEMETRY SYSTEM - PHASE II B
SEGMENT 5 NETWORK
ARCHITECTURE DIAGRAM - 2

PROJECT ID: FCC0001280 | PCA EF11715001 | DWG 176-D153.10 | SHEET: 10 OF 63

TETRA TECH
www.tetratech.com
17885 Von Karman Avenue, Suite 500
Irvine, California 92614
Phone: 949-809-5000

DRAFTER ALH | DESIGNER NH | CHECKER MK | CADD PART NUMBER | REVIEWED BY | DATE

FILE NAME: $FILEL$

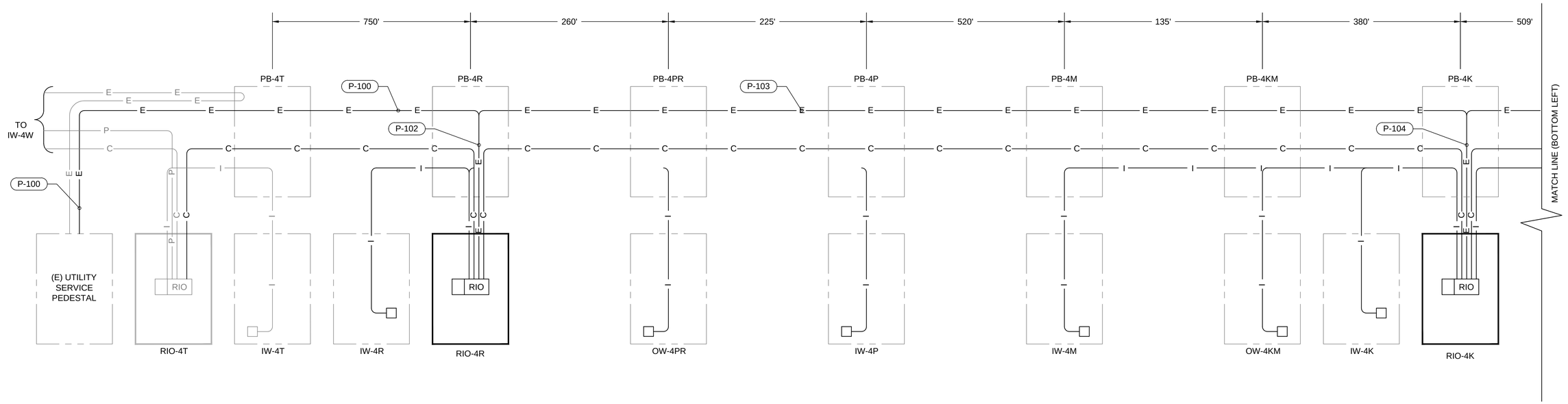

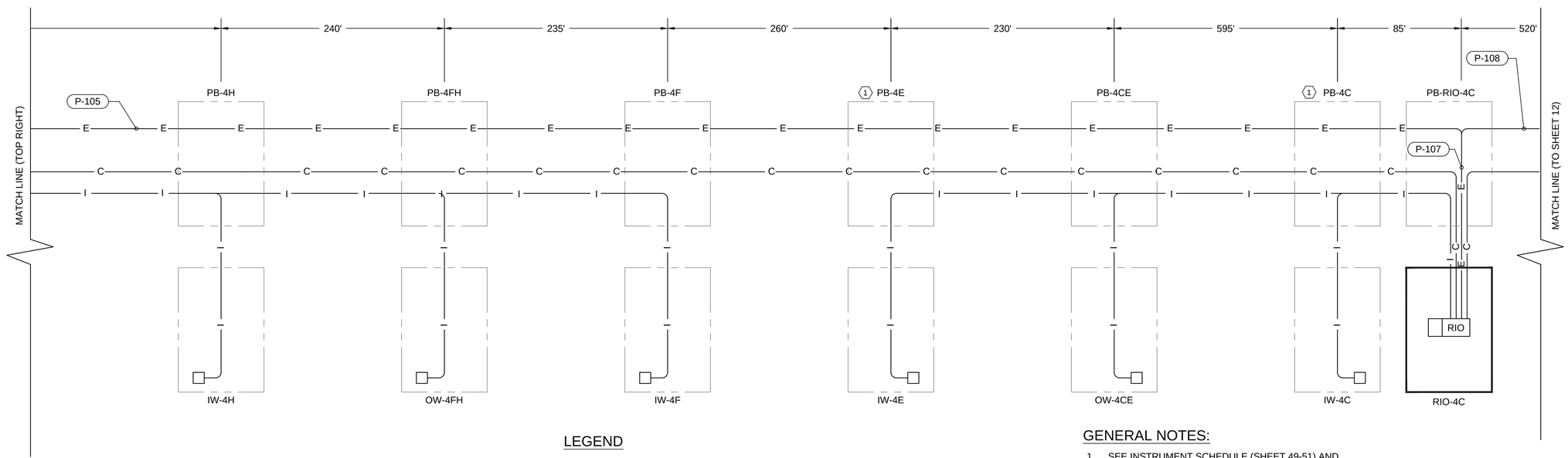

CONSTRUCTION NOTES:

1. EXISTING INJECTION WELL VAULT IS UTILIZED AS A PULL BOX.
2. SEE CONDUIT AND WIRE SCHEDULE ON SHEET 48

LEGEND

□	INSTRUMENTS - SEE INSTRUMENT SCHEDULE FOR TYPE AND QUANTITY
—C—	FIBER OPTIC CABLE IN EXISTING CONDUIT
—I—	INSTRUMENTATION CABLE(S) IN EXISTING CONDUIT
—P—	24 VDC POWER WIRES IN CONDUIT
— – – —	AREA OF ENCLOSURE BOUNDARY
—E—	240 VAC POWER SUPPLY
▬▬	ABOVE GROUND RIO PANEL
RIO	REMOTE I/O

GRAY LINE - EXISTING

BLACK LINE - PHASE IIB SCOPE OF WORK

GENERAL NOTES:

1. SEE INSTRUMENT SCHEDULE (SHEET 49-51) AND SCHEMATICS (SHEET 60) FOR FIELD INSTRUMENT CONNECTION REQUIREMENTS.
2. DISTANCES SHOWN ARE APPROXIMATE AND REQUIRE FIELD VERIFICATION.
3. IF THERE ARE ONLY TWO CONDUITS BETWEEN RIOS. RUN INSTRUMENT WIRES IN FIBER OPTIC CONDUITS.

DATE	BY	DESCRIPTION

REVISIONS

REGISTERED PROFESSIONAL ENGINEER
JAMEEN KASSEP
No. E 15809
Exp. 12-31-16
ELECTRICAL
STATE OF CALIFORNIA

PROJECT ENGINEER DATE

COUNTY OF LOS ANGELES DEPARTMENT OF PUBLIC WORKS

WEST COAST BASIN BARRIER PROJECT
TELEMETRY SYSTEM - PHASE II B
SEGMENT 1
ONE-LINE DIAGRAM - 1

PROJECT ID: FCC0001280 | PCA EF11715001 | DWG 176-D153.11 | SHEET: 11 OF 63

TETRA TECH
www.tetratech.com
17885 Von Karman Avenue, Suite 500
Irvine, California 92614
Phone: 949-809-5000

DRAFTER ALH | DESIGNER NH | CHECKER MK | CADD PART NUMBER | REVIEWED BY | DATE

FILE NAME: $FILE$

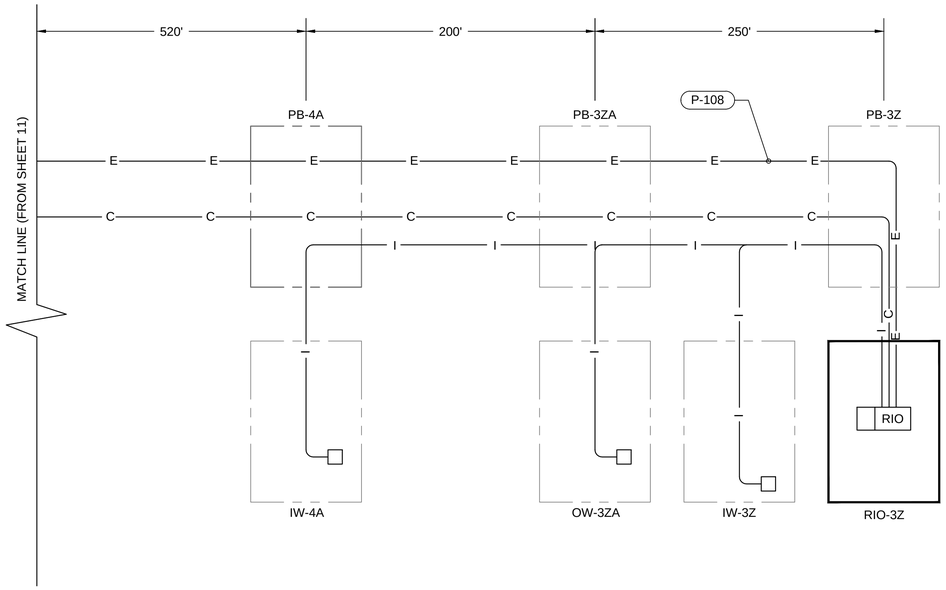

CONSTRUCTION NOTES:

1. SEE CONDUIT AND WIRE SCHEDULE ON SHEET 48

LEGEND

□	INSTRUMENTS - SEE INSTRUMENT SCHEDULE FOR TYPE AND QUANTITY
—— C ——	FIBER OPTIC CABLE IN EXISTING CONDUIT
—— I ——	INSTRUMENTATION CABLE(S) IN EXISTING CONDUIT
—— P ——	24 VDC POWER WIRES IN CONDUIT
— — —	AREA OF ENCLOSURE BOUNDARY
—— E ——	240 VAC POWER SUPPLY
———	ABOVE GROUND RIO PANEL
RIO	REMOTE I/O

GRAY LINE - EXISTING

BLACK LINE - PHASE IIB SCOPE OF WORK

GENERAL NOTES:

1. SEE INSTRUMENT SCHEDULE (SHEET 49-51) AND SCHEMATICS (SHEET 60) FOR FIELD INSTRUMENT CONNECTION REQUIREMENTS.
2. DISTANCES SHOWN ARE APPROXIMATE AND REQUIRE FIELD VERIFICATION.
3. IF THERE ARE ONLY TWO CONDUITS BETWEEN RIOS. RUN INSTRUMENT WIRES IN FIBER OPTIC CONDUITS.

DATE	BY	DESCRIPTION

REVISIONS

REGISTERED PROFESSIONAL ENGINEER
JAMEEN KASSAPIAN
No. E 15809
Exp. 12-31-16
ELECTRICAL
STATE OF CALIFORNIA

PROJECT ENGINEER DATE

COUNTY OF LOS ANGELES DEPARTMENT OF PUBLIC WORKS

WEST COAST BASIN BARRIER PROJECT
TELEMETRY SYSTEM - PHASE II B
SEGMENT 1
ONE-LINE DIAGRAM - 2

PROJECT ID: FCC0001280 | PCA EF11715001 | DWG 176-D153.12 | SHEET: 12 OF 63

TETRA TECH
www.tetratech.com
17885 Von Karman Avenue, Suite 500
Irvine, California 92614
Phone: 949-809-5000

DRAFTER ALH | DESIGNER NH | CHECKER MK | CADD PART NUMBER | REVIEWED BY | DATE

FILE NAME: $FILE$

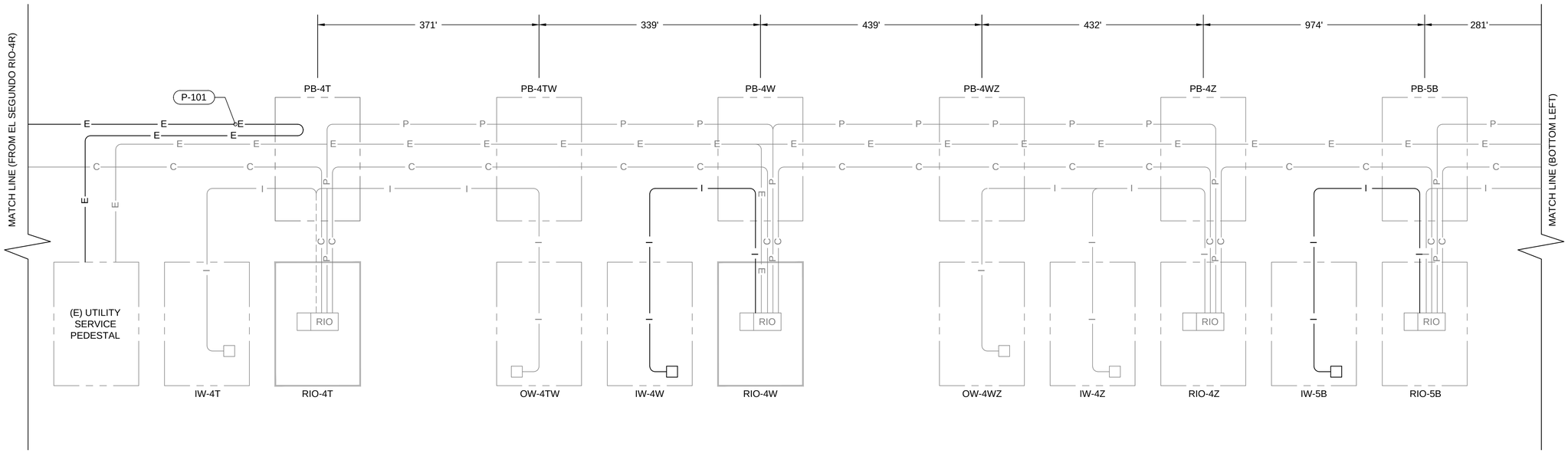

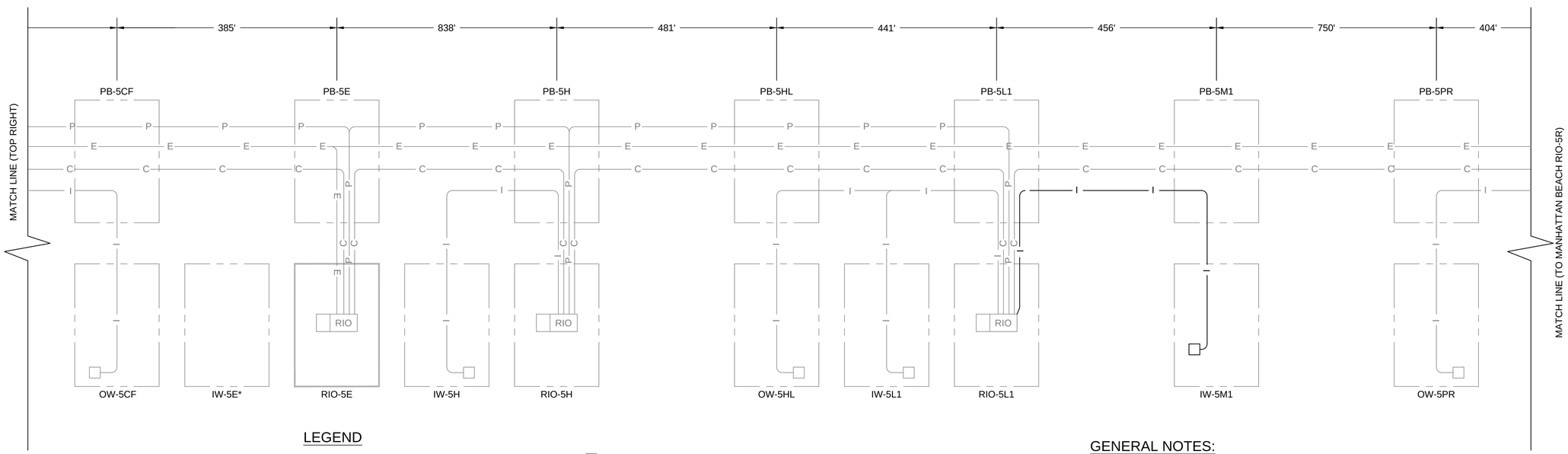

LEGEND

GRAY LINE - EXISTING

BLACK LINE - PHASE IIB SCOPE OF WORK

* INDICATES OPTIONAL WELL UNDER WCBBP PHASE II "OPTIONAL FACILITIES"

□	INSTRUMENTS - SEE INSTRUMENT SCHEDULE FOR TYPE AND QUANTITY
—C—	FIBER OPTIC CABLE IN EXISTING CONDUIT
—I—	INSTRUMENTATION CABLE(S) IN EXISTING CONDUIT
—P—	24 VDC POWER WIRES IN CONDUIT
— — —	AREA OF ENCLOSURE BOUNDARY
—E—	240 VAC POWER SUPPLY
▬▬	ABOVE GROUND RIO PANEL
RIO	REMOTE I/O

GENERAL NOTES:

1. SEE INSTRUMENT SCHEDULE (SHEET 52) AND SCHEMATICS (SHEET 60) FOR FIELD INSTRUMENT CONNECTION REQUIREMENTS.
2. DISTANCES SHOWN ARE APPROXIMATE AND REQUIRE FIELD VERIFICATION.

DATE	BY	DESCRIPTION

REVISIONS

REGISTERED PROFESSIONAL ENGINEER
JAMEEN KASSEF
No. E 15809
Exp. 12-31-16
ELECTRICAL
STATE OF CALIFORNIA

PROJECT ENGINEER DATE

COUNTY OF LOS ANGELES DEPARTMENT OF PUBLIC WORKS

WEST COAST BASIN BARRIER PROJECT
TELEMETRY SYSTEM - PHASE II B
SEGMENT 2
ONE-LINE DIAGRAM

PROJECT ID: FCC0001280 | PCA EF11715001 | DWG 176-D153.13 | SHEET: 13 OF 63

TETRA TECH
www.tetratech.com
17885 Von Karman Avenue, Suite 500
Irvine, California 92614
Phone: 949-809-5000

DRAFTER ALH | DESIGNER NH | CHECKER MK | CADD PART NUMBER | REVIEWED BY | DATE

FILE NAME: $FILE$

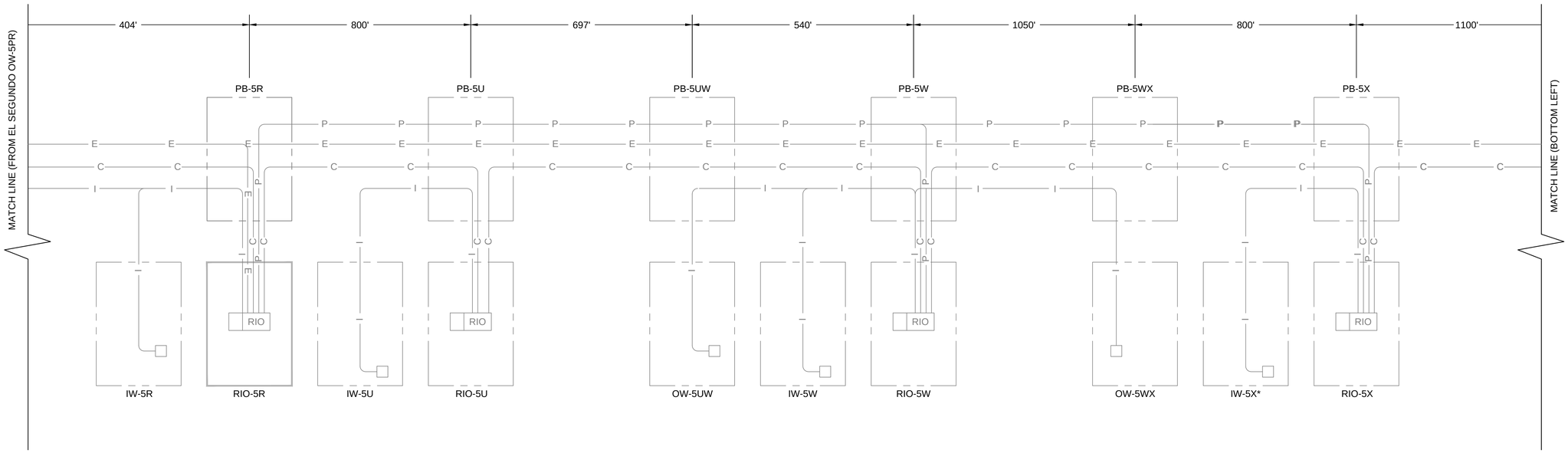

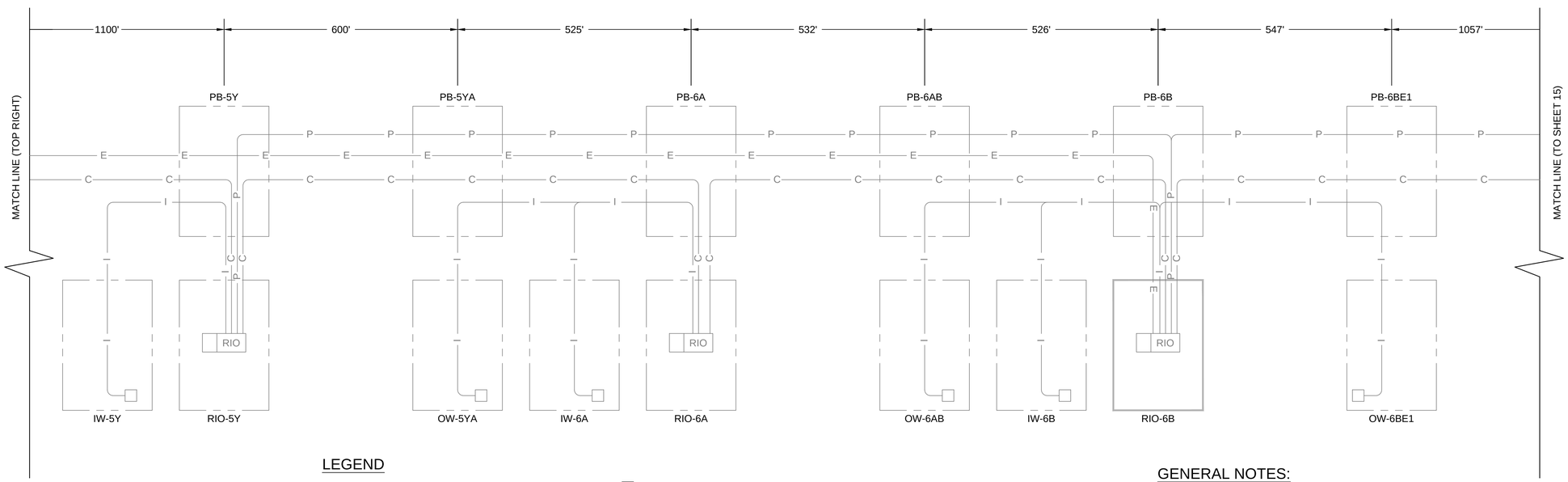

LEGEND

GRAY LINE - EXISTING

BLACK LINE - PHASE IIB SCOPE OF WORK

* INDICATES OPTIONAL WELL UNDER WCBBP PHASE II "OPTIONAL FACILITIES"

□	INSTRUMENTS - SEE INSTRUMENT SCHEDULE FOR TYPE AND QUANTITY
—C—	FIBER OPTIC CABLE IN EXISTING CONDUIT
—I—	INSTRUMENTATION CABLE(S) IN EXISTING CONDUIT
—P—	24 VDC POWER WIRES IN CONDUIT
— — —	AREA OF ENCLOSURE BOUNDARY
—E—	240 VAC POWER SUPPLY
▬▬	ABOVE GROUND RIO PANEL
RIO	REMOTE I/O

GENERAL NOTES:

1. SEE INSTRUMENT SCHEDULE (SHEET 52) AND SCHEMATICS (SHEET 60) FOR FIELD INSTRUMENT CONNECTION REQUIREMENTS.
2. DISTANCES SHOWN ARE APPROXIMATE AND REQUIRE FIELD VERIFICATION.

TETRA TECH
www.tetratech.com
17885 Von Karman Avenue, Suite 500
Irvine, California 92614
Phone: 949-809-5000

DATE	BY	DESCRIPTION

REVISIONS

REGISTERED PROFESSIONAL ENGINEER — JAMEEN KASSEF — No. E 15809 — Exp. 12-31-16 — ELECTRICAL — STATE OF CALIFORNIA

PROJECT ENGINEER DATE

COUNTY OF LOS ANGELES DEPARTMENT OF PUBLIC WORKS

WEST COAST BASIN BARRIER PROJECT
TELEMETRY SYSTEM - PHASE II B
SEGMENT 3
ONE-LINE DIAGRAM - 1

PROJECT ID: FCC0001280 | PCA EF11715001 | DWG 176-D153.14 | SHEET: 14 OF 63

DRAFTER ALH | DESIGNER NH | CHECKER MK | CADD PART NUMBER | REVIEWED BY | DATE

FILE NAME: $FILE$

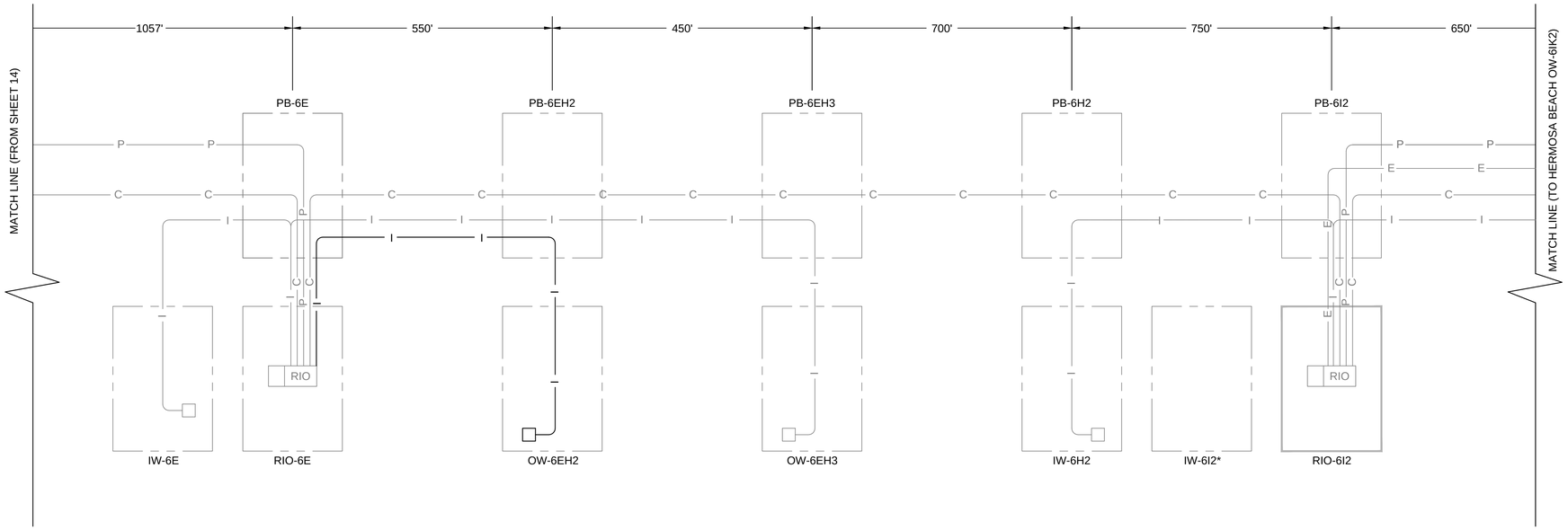

LEGEND

GRAY LINE - EXISTING

BLACK LINE - PHASE IIB SCOPE OF WORK

* INDICATES OPTIONAL WELL UNDER WCBBP PHASE II "OPTIONAL FACILITIES"

□	INSTRUMENTS - SEE INSTRUMENT SCHEDULE FOR TYPE AND QUANTITY
—— C ——	FIBER OPTIC CABLE IN EXISTING CONDUIT
—— I ——	INSTRUMENTATION CABLE(S) IN EXISTING CONDUIT
—— P ——	24 VDC POWER WIRES IN CONDUIT
— — —	AREA OF ENCLOSURE BOUNDARY
—— E ——	240 VAC POWER SUPPLY
———	ABOVE GROUND RIO PANEL
RIO	REMOTE I/O

GENERAL NOTES:

1. SEE INSTRUMENT SCHEDULE (SHEET 52) AND SCHEMATICS (SHEET 60) FOR FIELD INSTRUMENT CONNECTION REQUIREMENTS.
2. DISTANCES SHOWN ARE APPROXIMATE AND REQUIRE FIELD VERIFICATION.

DATE	BY	DESCRIPTION

REVISIONS

REGISTERED PROFESSIONAL ENGINEER
JAMEEN KASSAPIAN
No. E 15809
Exp. 12-31-16
ELECTRICAL
STATE OF CALIFORNIA

PROJECT ENGINEER DATE

COUNTY OF LOS ANGELES DEPARTMENT OF PUBLIC WORKS

WEST COAST BASIN BARRIER PROJECT
TELEMETRY SYSTEM - PHASE II B
SEGMENT 3
ONE-LINE DIAGRAM - 2

PROJECT ID: FCC0001280 | PCA EF11715001 | DWG 176-D153.15 | SHEET: 15 OF 63

TETRA TECH
www.tetratech.com
17885 Von Karman Avenue, Suite 500
Irvine, California 92614
Phone: 949-809-5000

DRAFTER ALH | DESIGNER NH | CHECKER MK | CADD PART NUMBER | REVIEWED BY | DATE

FILE NAME: $FILE$

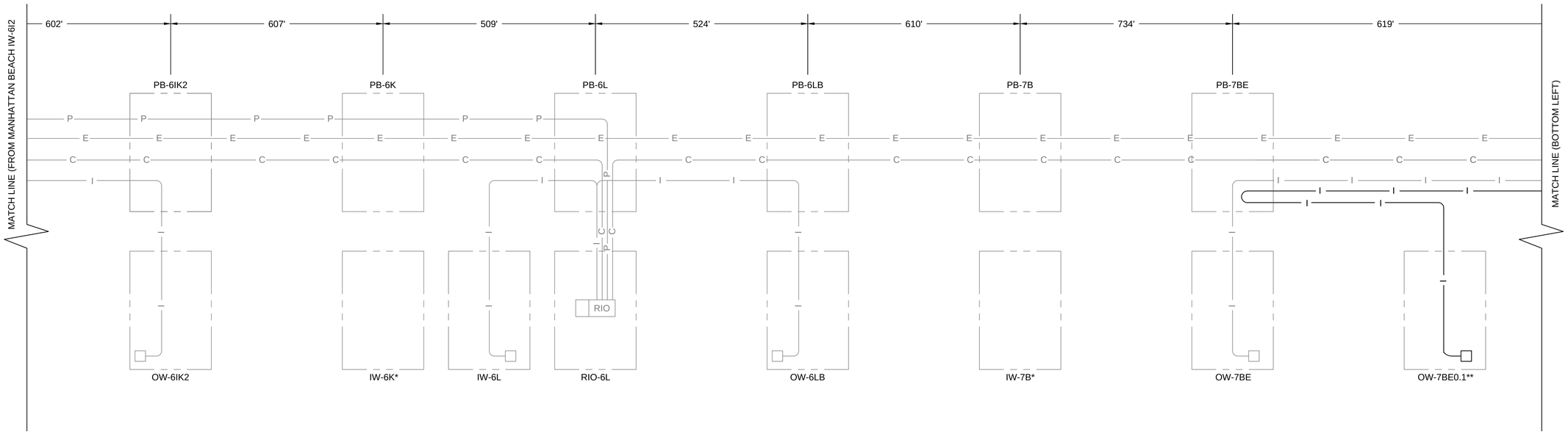

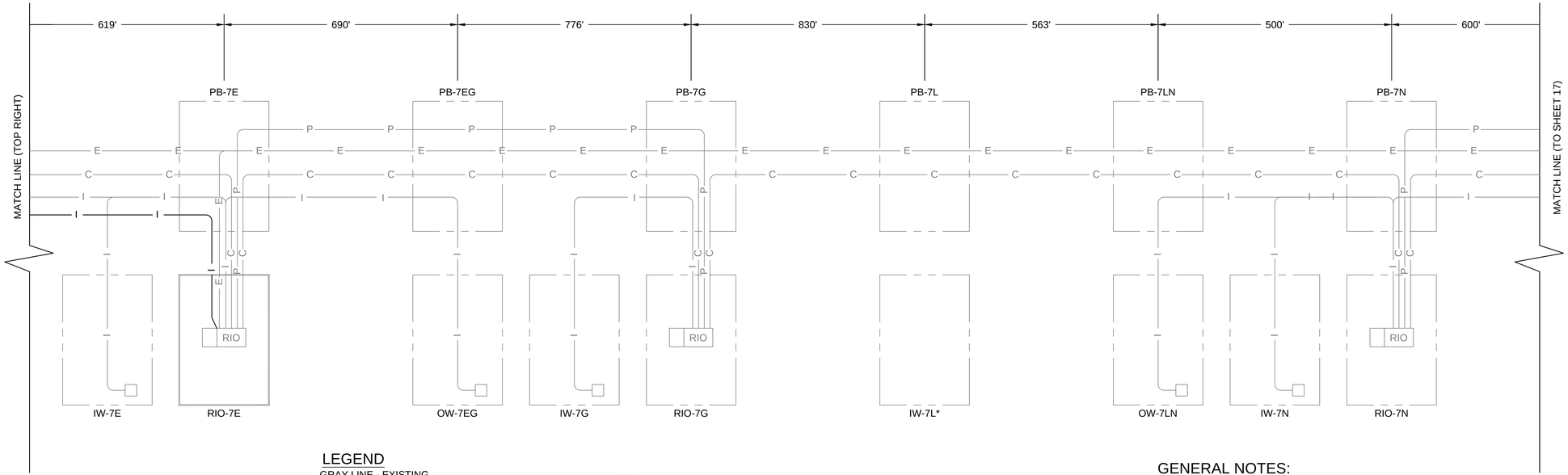

LEGEND

GRAY LINE - EXISTING

BLACK LINE - PHASE IIB SCOPE OF WORK

* INDICATES OPTIONAL WELL UNDER WCBBP PHASE II "OPTIONAL FACILITIES"

**INDICATES OPTIONAL WELL UNDER WCBBP PHASE IIB

□	INSTRUMENTS - SEE INSTRUMENT SCHEDULE FOR TYPE AND QUANTITY
—— C ——	FIBER OPTIC CABLE IN EXISTING CONDUIT
—— I ——	INSTRUMENTATION CABLE(S) IN EXISTING CONDUIT
—— P ——	24 VDC POWER WIRES IN CONDUIT
— — —	AREA OF ENCLOSURE BOUNDARY
—— E ——	240 VAC POWER SUPPLY
▬▬▬	ABOVE GROUND RIO PANEL
RIO	REMOTE I/O

GENERAL NOTES:

1. SEE INSTRUMENT SCHEDULE (SHEET 52) AND SCHEMATICS (SHEET 60) FOR FIELD INSTRUMENT CONNECTION REQUIREMENTS.
2. DISTANCES SHOWN ARE APPROXIMATE AND REQUIRE FIELD VERIFICATION.

TETRA TECH
www.tetratech.com
17885 Von Karman Avenue, Suite 500
Irvine, California 92614
Phone: 949-809-5000

DATE	BY	DESCRIPTION

REVISIONS

REGISTERED PROFESSIONAL ENGINEER — MARZEN KASSABIAN — No. E 15809 — Exp. 12-31-16 — ELECTRICAL — STATE OF CALIFORNIA

PROJECT ENGINEER DATE

COUNTY OF LOS ANGELES DEPARTMENT OF PUBLIC WORKS

WEST COAST BASIN BARRIER PROJECT
TELEMETRY SYSTEM - PHASE II B
SEGMENT 4
ONE-LINE DIAGRAM - 1

PROJECT ID: FCC0001280 | PCA EF11715001 | DWG 176-D153.16 | SHEET: 16 OF 63

DRAFTER ALH | DESIGNER NH | CHECKER MK | CADD PART NUMBER | REVIEWED BY | DATE

FILE NAME: $FILEL$

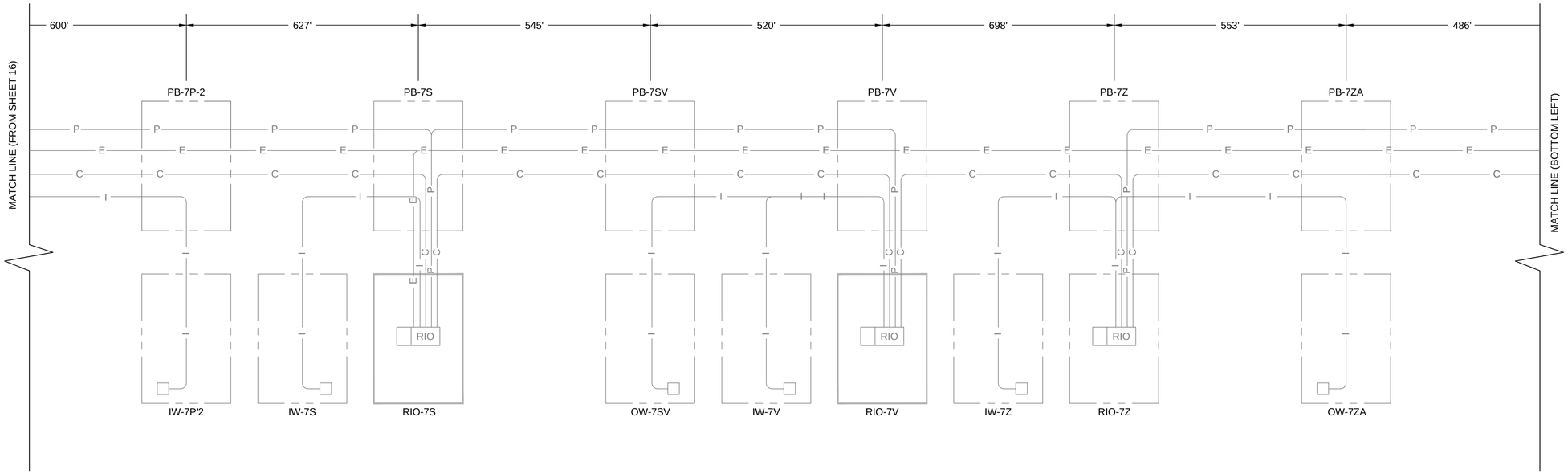

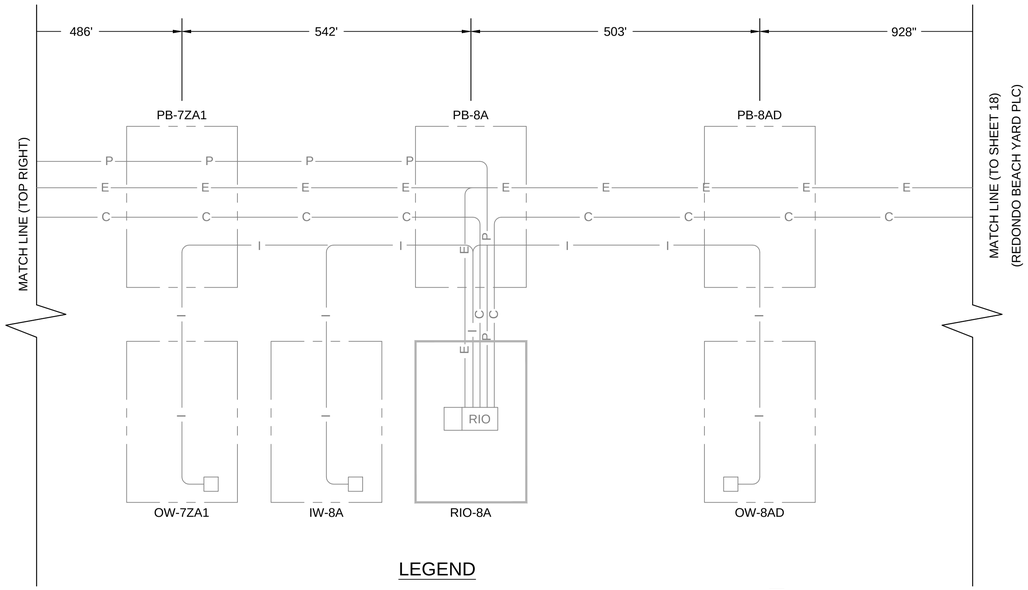

LEGEND

GRAY LINE - EXISTING

BLACK LINE - PHASE IIB SCOPE OF WORK

* INDICATES OPTIONAL WELL UNDER WCBBP PHASE II "OPTIONAL FACILITIES"

□	INSTRUMENTS - SEE INSTRUMENT SCHEDULE FOR TYPE AND QUANTITY
—— C ——	FIBER OPTIC CABLE IN EXISTING CONDUIT
—— I ——	INSTRUMENTATION CABLE(S) IN EXISTING CONDUIT
—— P ——	24 VDC POWER WIRES IN CONDUIT
— — — —	AREA OF ENCLOSURE BOUNDARY
—— E ——	240 VAC POWER SUPPLY
▬▬▬	ABOVE GROUND RIO PANEL
RIO	REMOTE I/O

GENERAL NOTES:

1. SEE INSTRUMENT SCHEDULE (SHEET 52) AND SCHEMATICS (SHEET 60) FOR FIELD INSTRUMENT CONNECTION REQUIREMENTS.
2. DISTANCES SHOWN ARE APPROXIMATE AND REQUIRE FIELD VERIFICATION.

TETRA TECH
www.tetratech.com
17885 Von Karman Avenue, Suite 500
Irvine, California 92614
Phone: 949-809-5000

DATE	BY	DESCRIPTION

REVISIONS

REGISTERED PROFESSIONAL ENGINEER
AMIZER KASSAM
No. E 15809
Exp. 12-31-16
ELECTRICAL
STATE OF CALIFORNIA

PROJECT ENGINEER DATE

COUNTY OF LOS ANGELES DEPARTMENT OF PUBLIC WORKS

WEST COAST BASIN BARRIER PROJECT
TELEMETRY SYSTEM - PHASE II B
SEGMENT 4
ONE-LINE DIAGRAM - 2

PROJECT ID: FCC0001280 | PCA EF11715001 | DWG 176-D153.17 | SHEET: 17 OF 63

DRAFTER ALH | DESIGNER NH | CHECKER MK | CADD PART NUMBER | REVIEWED BY | DATE

FILE NAME: $FILE$

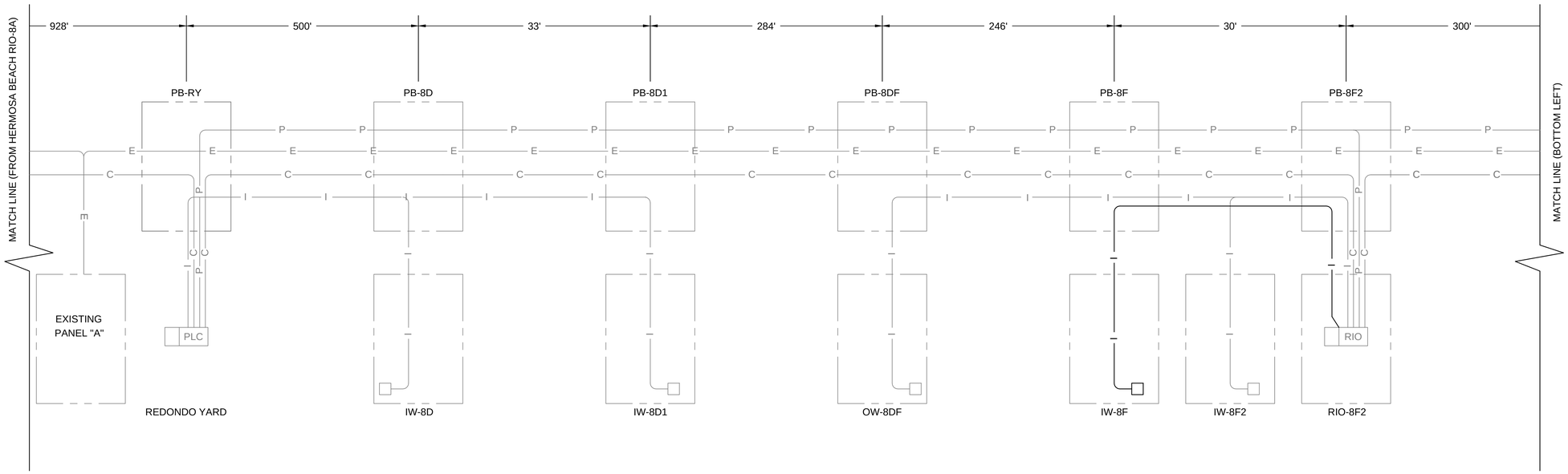

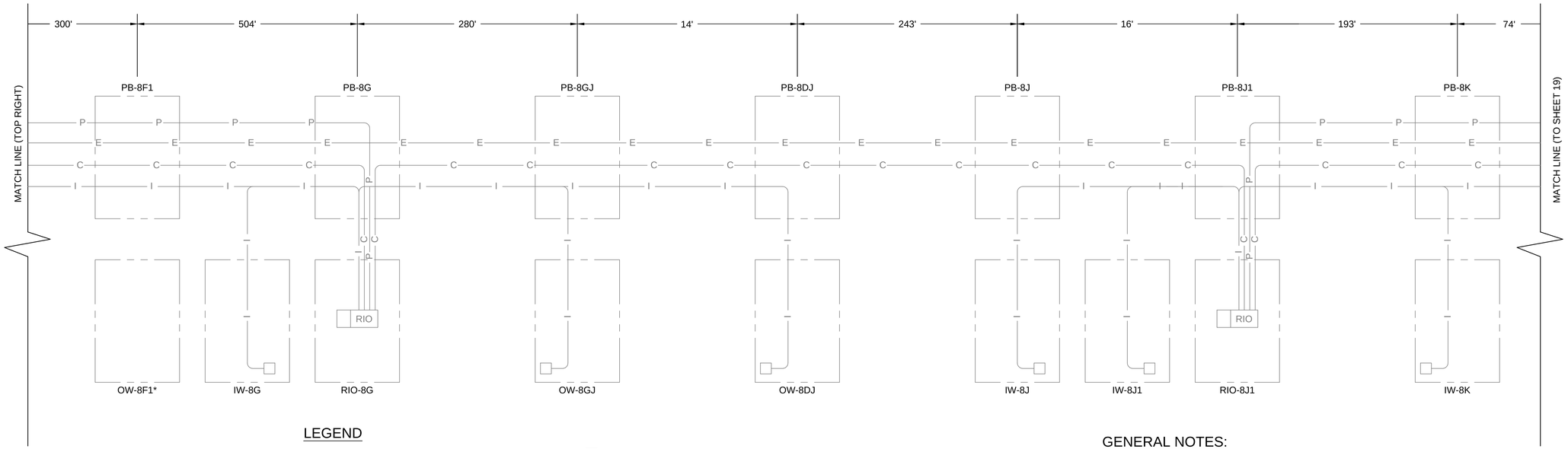

LEGEND

GRAY LINE - EXISTING

BLACK LINE - PHASE IIB SCOPE OF WORK

* INDICATES OPTIONAL WELL UNDER WCBBP PHASE II "OPTIONAL FACILITIES"

□	INSTRUMENTS - SEE INSTRUMENT SCHEDULE FOR TYPE AND QUANTITY
—— C ——	FIBER OPTIC CABLE IN EXISTING CONDUIT
—— I ——	INSTRUMENTATION CABLE(S) IN EXISTING CONDUIT
—— P ——	24 VDC POWER WIRES IN CONDUIT
— — — —	AREA OF ENCLOSURE BOUNDARY
—— E ——	240 VAC POWER SUPPLY
RIO	REMOTE I/O
PLC	PROGRAMMABLE LOGIC CONTROLLER

GENERAL NOTES:

1. SEE INSTRUMENT SCHEDULE (SHEET 53-54) AND SCHEMATICS (SHEET 60) FOR FIELD INSTRUMENT CONNECTION REQUIREMENTS.
2. DISTANCES SHOWN ARE APPROXIMATE AND REQUIRE FIELD VERIFICATION.

DATE	BY	DESCRIPTION

REVISIONS

REGISTERED PROFESSIONAL ENGINEER
MARZEN RASSAF
No. E 15809
Exp. 12-31-16
ELECTRICAL
STATE OF CALIFORNIA

PROJECT ENGINEER DATE

COUNTY OF LOS ANGELES DEPARTMENT OF PUBLIC WORKS

WEST COAST BASIN BARRIER PROJECT
TELEMETRY SYSTEM - PHASE II B
SEGMENT 5
ONE-LINE DIAGRAM - 1

PROJECT ID: FCC0001280 | PCA EF11715001 | DWG 176-D153.18 | SHEET: 18 OF 63

TETRA TECH
www.tetratech.com
17885 Von Karman Avenue, Suite 500
Irvine, California 92614
Phone: 949-809-5000

DRAFTER ALH | DESIGNER NH | CHECKER MK | CADD PART NUMBER | REVIEWED BY | DATE

FILE NAME: $FILEL$

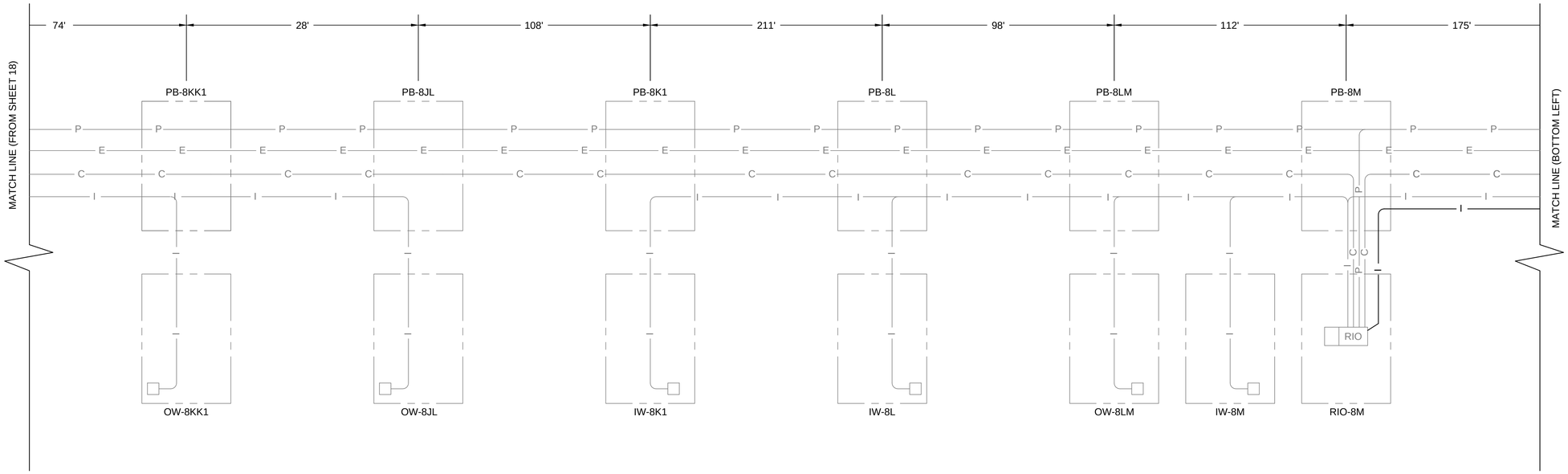

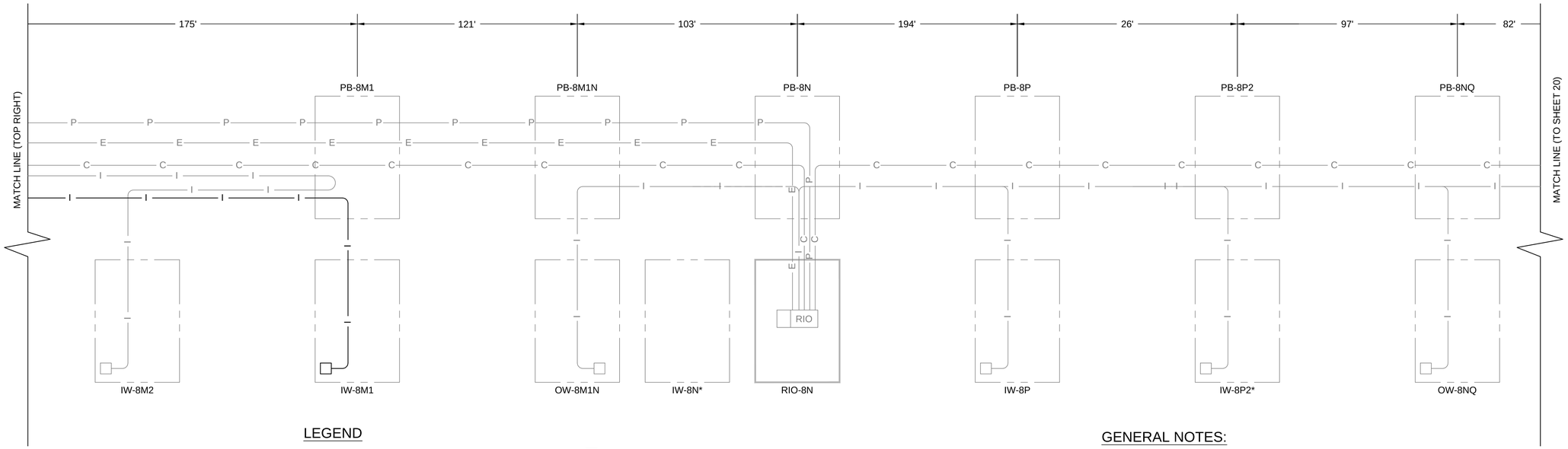

LEGEND

GRAY LINE - EXISTING

BLACK LINE - PHASE IIB SCOPE OF WORK

* INDICATES OPTIONAL WELL UNDER WCBBP PHASE II "OPTIONAL FACILITIES"

□	INSTRUMENTS - SEE INSTRUMENT SCHEDULE FOR TYPE AND QUANTITY
—C—	FIBER OPTIC CABLE IN EXISTING CONDUIT
—I—	INSTRUMENTATION CABLE(S) IN EXISTING CONDUIT
—P—	24 VDC POWER WIRES IN CONDUIT
— — —	AREA OF ENCLOSURE BOUNDARY
—E—	240 VAC POWER SUPPLY
———	ABOVE GROUND RIO PANEL
RIO	REMOTE I/O

GENERAL NOTES:

1. SEE INSTRUMENT SCHEDULE (SHEET 53-54) AND SCHEMATICS (SHEET 60) FOR FIELD INSTRUMENT CONNECTION REQUIREMENTS.
2. DISTANCES SHOWN ARE APPROXIMATE AND REQUIRE FIELD VERIFICATION.

DATE	BY	DESCRIPTION

REVISIONS

REGISTERED PROFESSIONAL ENGINEER
MAZEN KASSEM
No. E 15809
Exp. 12-31-16
ELECTRICAL
STATE OF CALIFORNIA

PROJECT ENGINEER DATE

COUNTY OF LOS ANGELES DEPARTMENT OF PUBLIC WORKS

WEST COAST BASIN BARRIER PROJECT
TELEMETRY SYSTEM - PHASE II B
SEGMENT 5
ONE-LINE DIAGRAM - 2

PROJECT ID: FCC0001280 | PCA EF11715001 | DWG 176-D153.19 | SHEET: 19 OF 63

TETRA TECH
www.tetratech.com
17885 Von Karman Avenue, Suite 500
Irvine, California 92614
Phone: 949-809-5000

DRAFTER ALH | DESIGNER NH | CHECKER MK | CADD PART NUMBER | REVIEWED BY | DATE

FILE NAME: $FILEL$

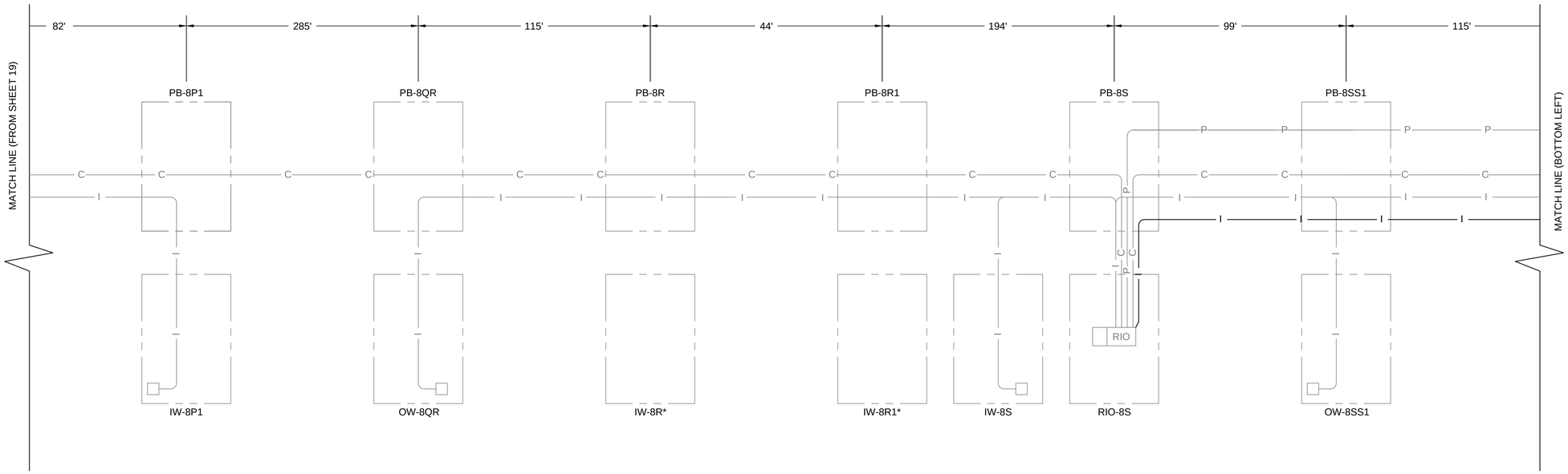

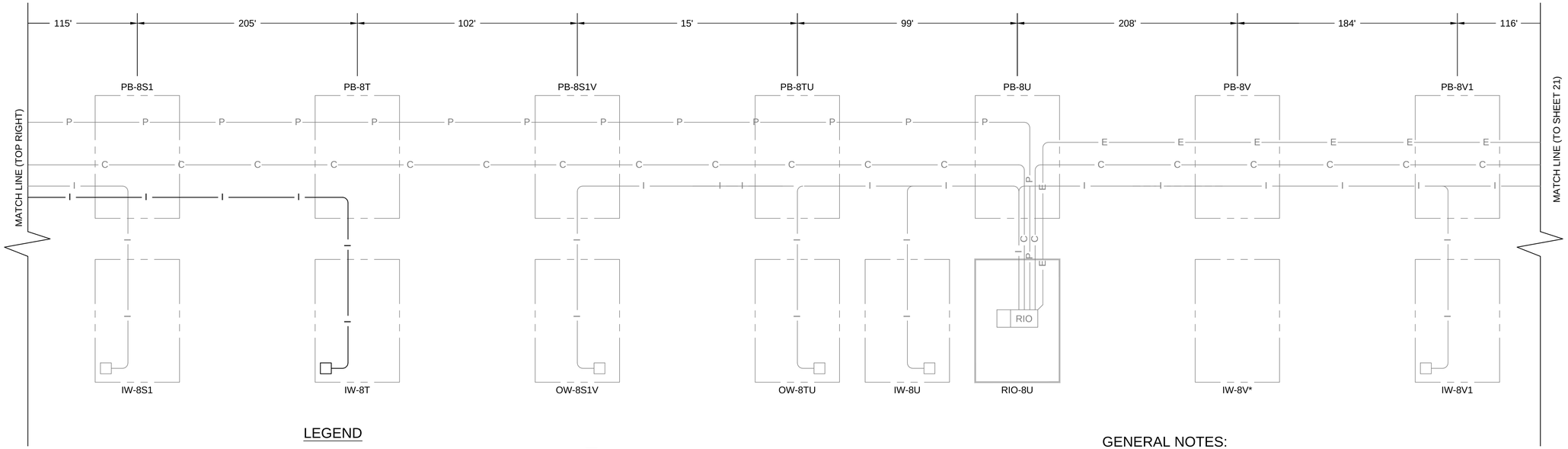

LEGEND

GRAY LINE - EXISTING

BLACK LINE - PHASE IIB SCOPE OF WORK

* INDICATES OPTIONAL WELL UNDER WCBBP PHASE II "OPTIONAL FACILITIES"

□	INSTRUMENTS - SEE INSTRUMENT SCHEDULE FOR TYPE AND QUANTITY
—C—	FIBER OPTIC CABLE IN EXISTING CONDUIT
—I—	INSTRUMENTATION CABLE(S) IN EXISTING CONDUIT
—P—	24 VDC POWER WIRES IN CONDUIT
— — —	AREA OF ENCLOSURE BOUNDARY
—E—	240 VAC POWER SUPPLY
———	ABOVE GROUND RIO PANEL
RIO	REMOTE I/O

GENERAL NOTES:

1. SEE INSTRUMENT SCHEDULE (SHEET 53-54) AND SCHEMATICS (SHEET 60) FOR FIELD INSTRUMENT CONNECTION REQUIREMENTS.
2. DISTANCES SHOWN ARE APPROXIMATE AND REQUIRE FIELD VERIFICATION.

DATE	BY	DESCRIPTION

REVISIONS

REGISTERED PROFESSIONAL ENGINEER
MAZEN KASSEM
No. E 15809
Exp. 12-31-16
ELECTRICAL
STATE OF CALIFORNIA

PROJECT ENGINEER DATE

COUNTY OF LOS ANGELES DEPARTMENT OF PUBLIC WORKS

WEST COAST BASIN BARRIER PROJECT
TELEMETRY SYSTEM - PHASE II B
SEGMENT 5
ONE-LINE DIAGRAM - 3

PROJECT ID: FCC0001280 | PCA EF11715001 | DWG 176-D153.20 | SHEET: 20 OF 63

TETRA TECH
www.tetratech.com
17885 Von Karman Avenue, Suite 500
Irvine, California 92614
Phone: 949-809-5000

DRAFTER ALH | DESIGNER NH | CHECKER MK | CADD PART NUMBER | REVIEWED BY | DATE

FILE NAME: $FILEL$

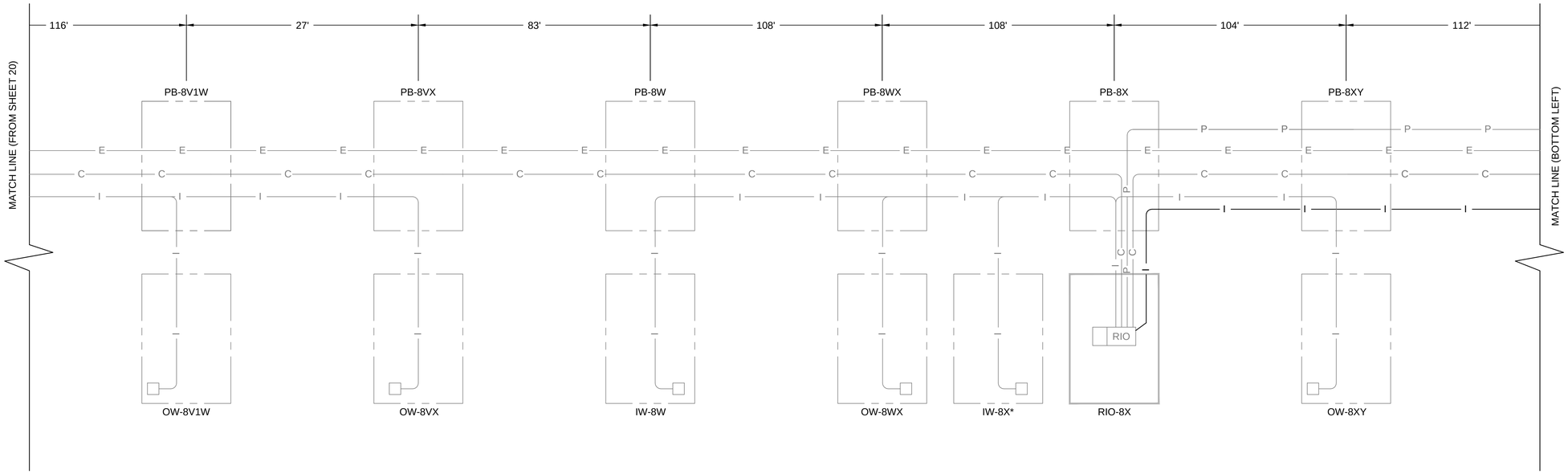

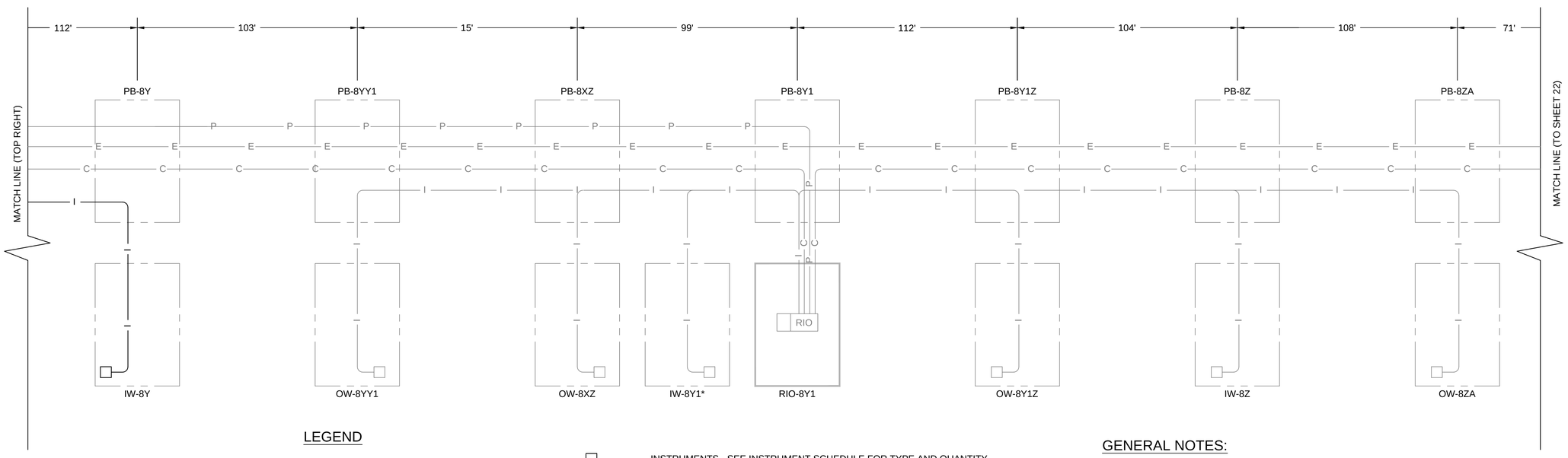

LEGEND

GRAY LINE - EXISTING

BLACK LINE - PHASE IIB SCOPE OF WORK

* INDICATES OPTIONAL WELL UNDER WCBBP PHASE II "OPTIONAL FACILITIES"

□	INSTRUMENTS - SEE INSTRUMENT SCHEDULE FOR TYPE AND QUANTITY
—C—	FIBER OPTIC CABLE IN EXISTING CONDUIT
—I—	INSTRUMENTATION CABLE(S) IN EXISTING CONDUIT
—P—	24 VDC POWER WIRES IN CONDUIT
— – – —	AREA OF ENCLOSURE BOUNDARY
—E—	240 VAC POWER SUPPLY
▬▬	ABOVE GROUND RIO PANEL
RIO	REMOTE I/O

GENERAL NOTES:

1. SEE INSTRUMENT SCHEDULE (SHEET 53-54) AND SCHEMATICS (SHEET 60) FOR FIELD INSTRUMENT CONNECTION REQUIREMENTS.
2. DISTANCES SHOWN ARE APPROXIMATE AND REQUIRE FIELD VERIFICATION.

DATE	BY	DESCRIPTION

REVISIONS

REGISTERED PROFESSIONAL ENGINEER
NAZEEN KARSSY
No. E 15809
Exp. 12-31-16
ELECTRICAL
STATE OF CALIFORNIA

PROJECT ENGINEER DATE

COUNTY OF LOS ANGELES DEPARTMENT OF PUBLIC WORKS

WEST COAST BASIN BARRIER PROJECT
TELEMETRY SYSTEM - PHASE II B
SEGMENT 5
ONE-LINE DIAGRAM - 4

PROJECT ID: FCC0001280 | PCA EF11715001 | DWG 176-D153.21 | SHEET: 21 OF 63

TETRA TECH
www.tetratech.com
17885 Von Karman Avenue, Suite 500
Irvine, California 92614
Phone: 949-809-5000

DRAFTER ALH | DESIGNER NH | CHECKER MK | CADD PART NUMBER | REVIEWED BY | DATE

FILE NAME: $FILEL$

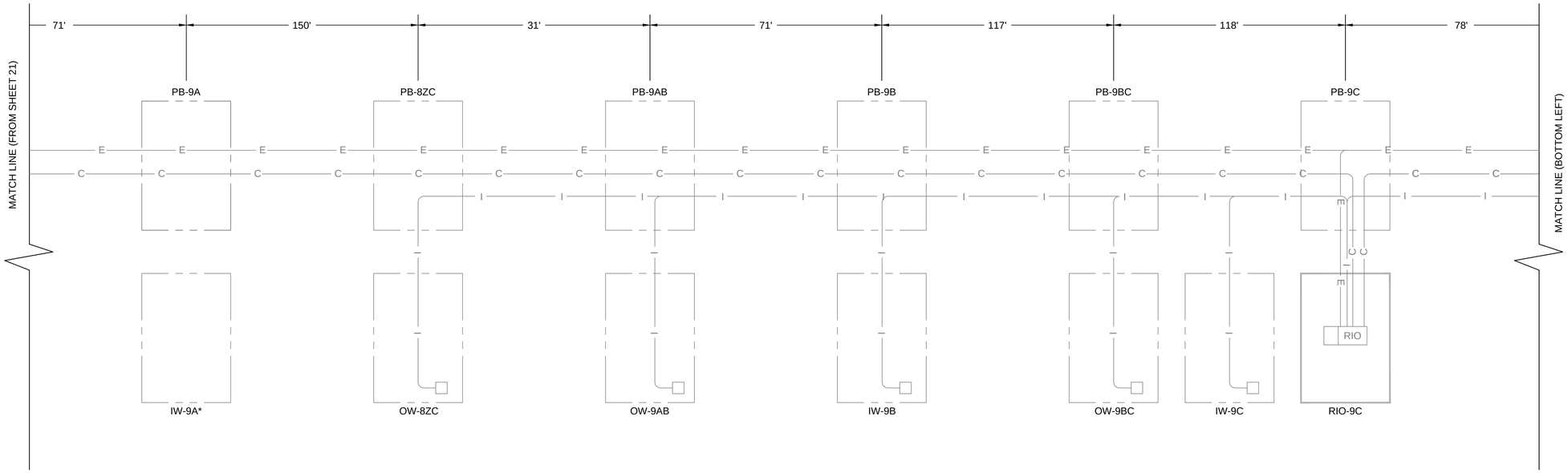

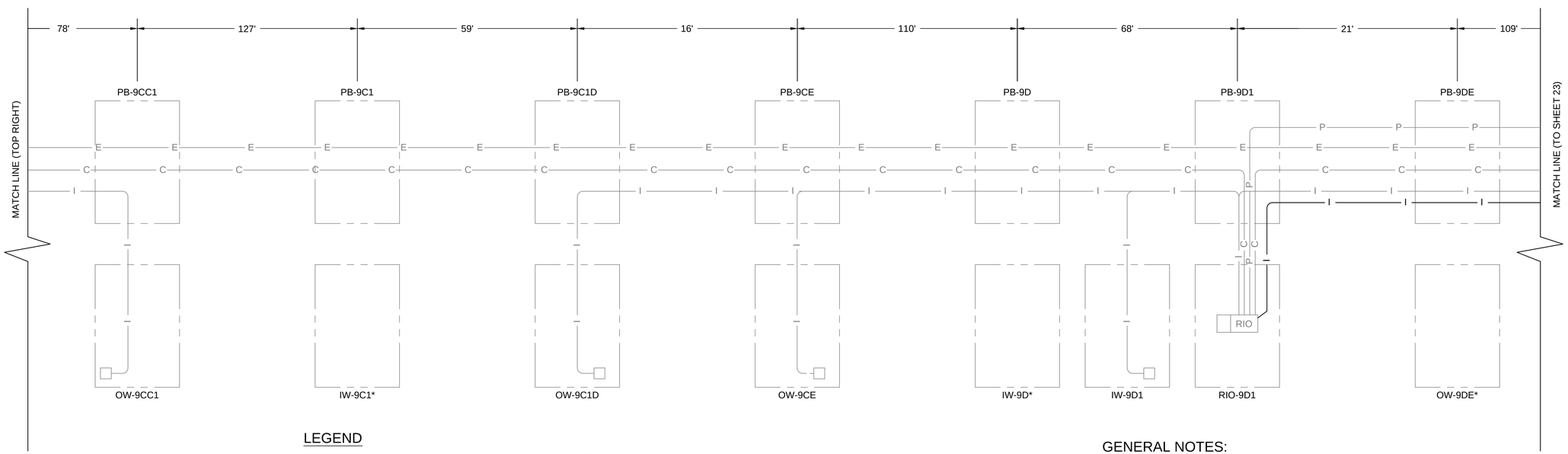

LEGEND

GRAY LINE - EXISTING

BLACK LINE - PHASE IIB SCOPE OF WORK

* INDICATES OPTIONAL WELL UNDER WCBBP PHASE II "OPTIONAL FACILITIES"

□	INSTRUMENTS - SEE INSTRUMENT SCHEDULE FOR TYPE AND QUANTITY
—C—	FIBER OPTIC CABLE IN EXISTING CONDUIT
—I—	INSTRUMENTATION CABLE(S) IN EXISTING CONDUIT
—P—	24 VDC POWER WIRES IN CONDUIT
— – – —	AREA OF ENCLOSURE BOUNDARY
—E—	240 VAC POWER SUPPLY
▬▬	ABOVE GROUND RIO PANEL
RIO	REMOTE I/O

GENERAL NOTES:

1. SEE INSTRUMENT SCHEDULE (SHEET 53-54) AND SCHEMATICS (SHEET 60) FOR FIELD INSTRUMENT CONNECTION REQUIREMENTS.
2. DISTANCES SHOWN ARE APPROXIMATE AND REQUIRE FIELD VERIFICATION.

DATE	BY	DESCRIPTION

REVISIONS

REGISTERED PROFESSIONAL ENGINEER
MAZEN KASSEM
No. E 15809
Exp. 12-31-16
ELECTRICAL
STATE OF CALIFORNIA

PROJECT ENGINEER DATE

COUNTY OF LOS ANGELES DEPARTMENT OF PUBLIC WORKS

WEST COAST BASIN BARRIER PROJECT
TELEMETRY SYSTEM - PHASE II B
SEGMENT 5
ONE-LINE DIAGRAM - 5

PROJECT ID: FCC0001280 | PCA EF11715001 | DWG 176-D153.22 | SHEET: 22 OF 63

TETRA TECH
www.tetratech.com
17885 Von Karman Avenue, Suite 500
Irvine, California 92614
Phone: 949-809-5000

DRAFTER ALH | DESIGNER NH | CHECKER MK | CADD PART NUMBER | REVIEWED BY | DATE

FILE NAME: $FILEL$

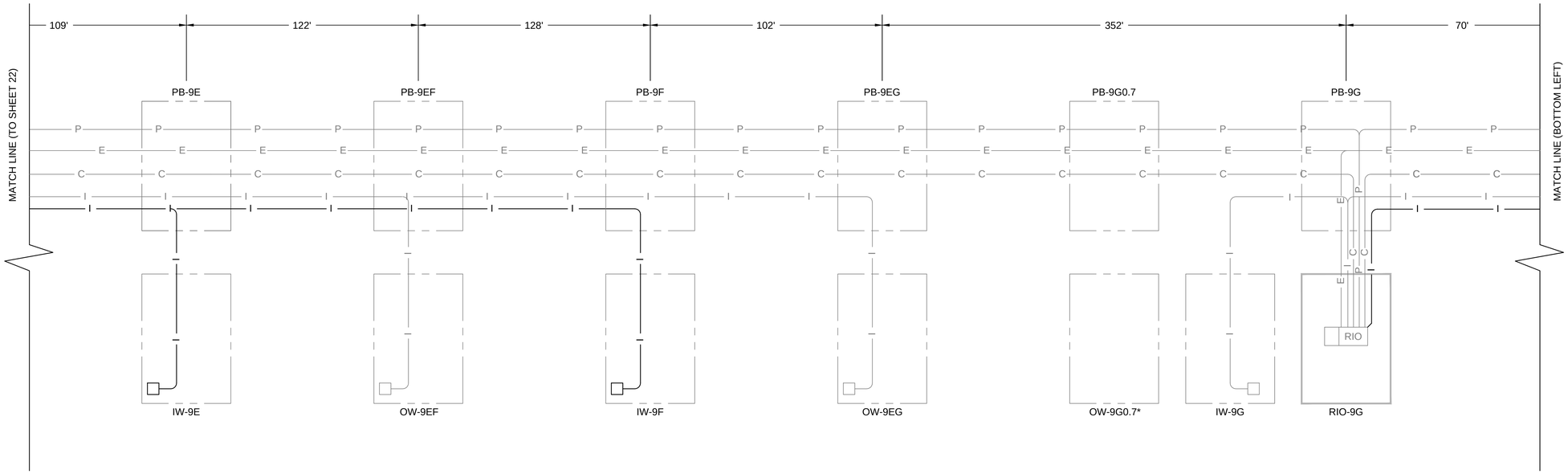

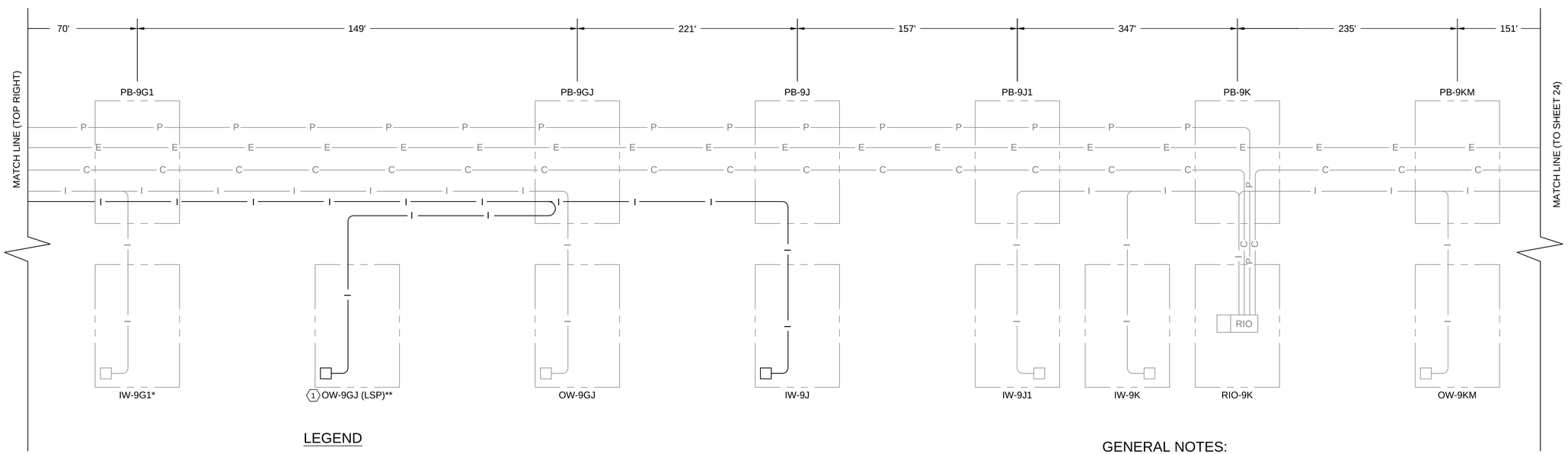

LEGEND

GRAY LINE - EXISTING

BLACK LINE - PHASE IIB SCOPE OF WORK

* INDICATES OPTIONAL WELL UNDER WCBBP PHASE II "OPTIONAL FACILITIES"

**INDICATES OPTIONAL WELL UNDER WCBBP PHASE IIB

□	INSTRUMENTS - SEE INSTRUMENT SCHEDULE FOR TYPE AND QUANTITY
—C—	FIBER OPTIC CABLE IN EXISTING CONDUIT
—I—	INSTRUMENTATION CABLE(S) IN EXISTING CONDUIT
—P—	24 VDC POWER WIRES IN CONDUIT
— — —	AREA OF ENCLOSURE BOUNDARY
—E—	240 VAC POWER SUPPLY
———	ABOVE GROUND RIO PANEL
RIO	REMOTE I/O

CONSTRUCTION NOTES:

1. INDICATES WELLS THAT WILL BE CONSTRUCTED UNDER A SEPERATE PROJECT

GENERAL NOTES:

1. SEE INSTRUMENT SCHEDULE (SHEET 53-54) AND SCHEMATICS (SHEET 60) FOR FIELD INSTRUMENT CONNECTION REQUIREMENTS.
2. DISTANCES SHOWN ARE APPROXIMATE AND REQUIRE FIELD VERIFICATION.

TETRA TECH
www.tetratech.com
17885 Von Karman Avenue, Suite 500
Irvine, California 92614
Phone: 949-809-5000

DATE	BY	DESCRIPTION

REVISIONS

REGISTERED PROFESSIONAL ENGINEER — MARTIN KARSNY — No. E 15809 — Exp. 12-31-16 — ELECTRICAL — STATE OF CALIFORNIA

PROJECT ENGINEER DATE

COUNTY OF LOS ANGELES DEPARTMENT OF PUBLIC WORKS

WEST COAST BASIN BARRIER PROJECT
TELEMETRY SYSTEM - PHASE II B
SEGMENT 5
ONE-LINE DIAGRAM - 6

PROJECT ID: FCC0001280 | PCA EF11715001 | DWG 176-D153.23 | SHEET: 23 OF 63

DRAFTER ALH | DESIGNER NH | CHECKER MK | CADD PART NUMBER | REVIEWED BY | DATE

FILE NAME: $FILEL$

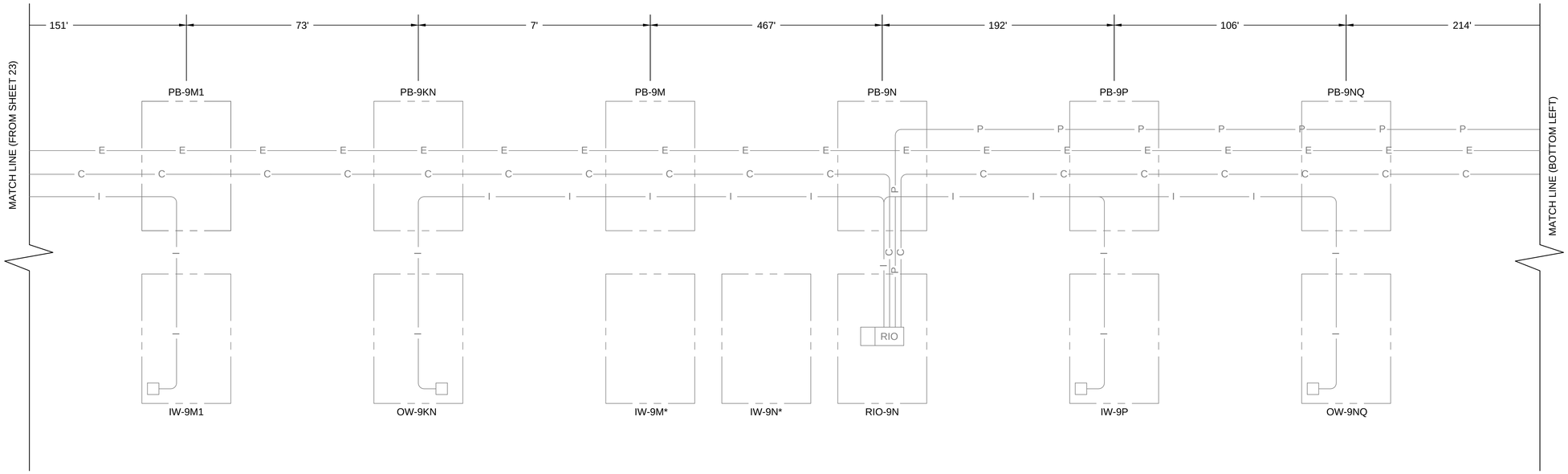

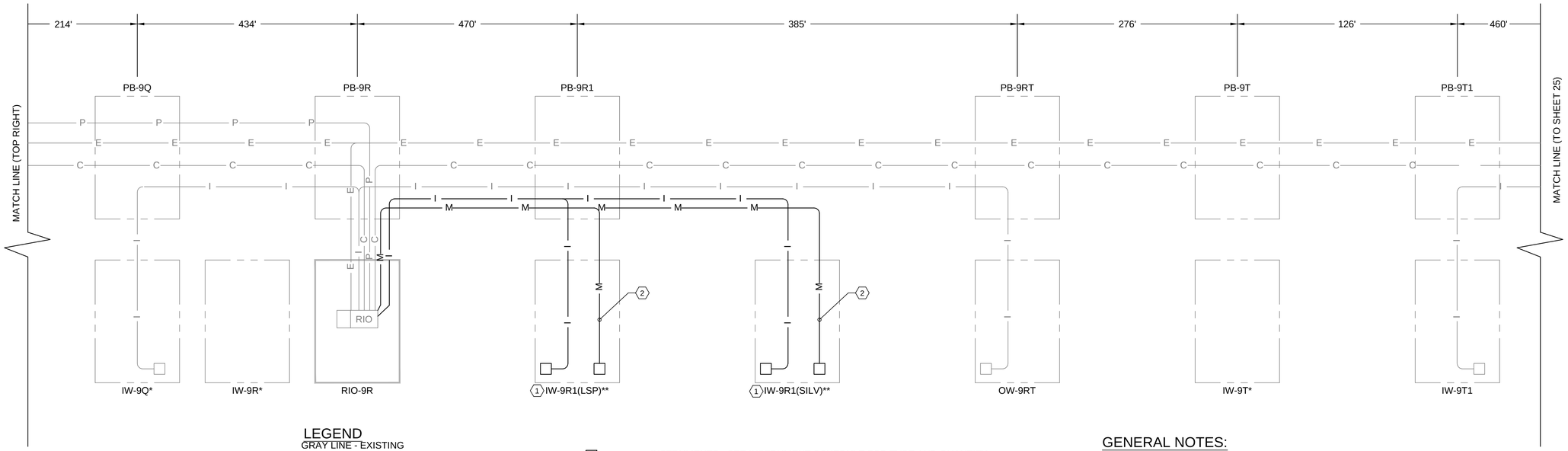

LEGEND

GRAY LINE - EXISTING

BLACK LINE - PHASE IIB SCOPE OF WORK

* INDICATES OPTIONAL WELL UNDER WCBBP PHASE II "OPTIONAL FACILITIES"

**INDICATES OPTIONAL WELL UNDER WCBBP PHASE IIB

□	INSTRUMENTS - SEE INSTRUMENT SCHEDULE FOR TYPE AND QUANTITY
—C—	FIBER OPTIC CABLE IN EXISTING CONDUIT
—I—	INSTRUMENTATION CABLE(S) IN EXISTING CONDUIT
—P—	24 VDC POWER WIRES IN CONDUIT
— — —	AREA OF ENCLOSURE BOUNDARY
—E—	240 VAC POWER SUPPLY
—M—	NEW MAGNETIC FLOW SENSOR CABLE(S)
———	ABOVE GROUND RIO PANEL
RIO	REMOTE I/O

CONSTRUCTION NOTES:

1. INDICATES WELLS THAT WILL BE CONSTRUCTED UNDER A SEPARATE PROJECT.
2. INDICATES THAT MAGNETIC FLOW METER WILL BE INSTALLED UNDER A SEPARATE PROJECT.

GENERAL NOTES:

1. SEE INSTRUMENT SCHEDULE (SHEET 53-54) AND SCHEMATICS (SHEET 60-61) FOR FIELD INSTRUMENT CONNECTION REQUIREMENTS.
2. DISTANCES SHOWN ARE APPROXIMATE AND REQUIRE FIELD VERIFICATION.

DATE	BY	DESCRIPTION

REVISIONS

REGISTERED PROFESSIONAL ENGINEER — MARZEN KASSAF — No. E 15809 — Exp. 12-31-16 — ELECTRICAL — STATE OF CALIFORNIA

PROJECT ENGINEER DATE

COUNTY OF LOS ANGELES DEPARTMENT OF PUBLIC WORKS

WEST COAST BASIN BARRIER PROJECT
TELEMETRY SYSTEM - PHASE II B
SEGMENT 5
ONE-LINE DIAGRAM - 7

PROJECT ID: FCC0001280 | PCA EF11715001 | DWG 176-D153.24 | SHEET: 24 OF 63

TETRA TECH
www.tetratech.com
17885 Von Karman Avenue, Suite 500
Irvine, California 92614
Phone: 949-809-5000

DRAFTER ALH | DESIGNER NH | CHECKER MK | CADD PART NUMBER | REVIEWED BY | DATE

FILE NAME: $FILE$

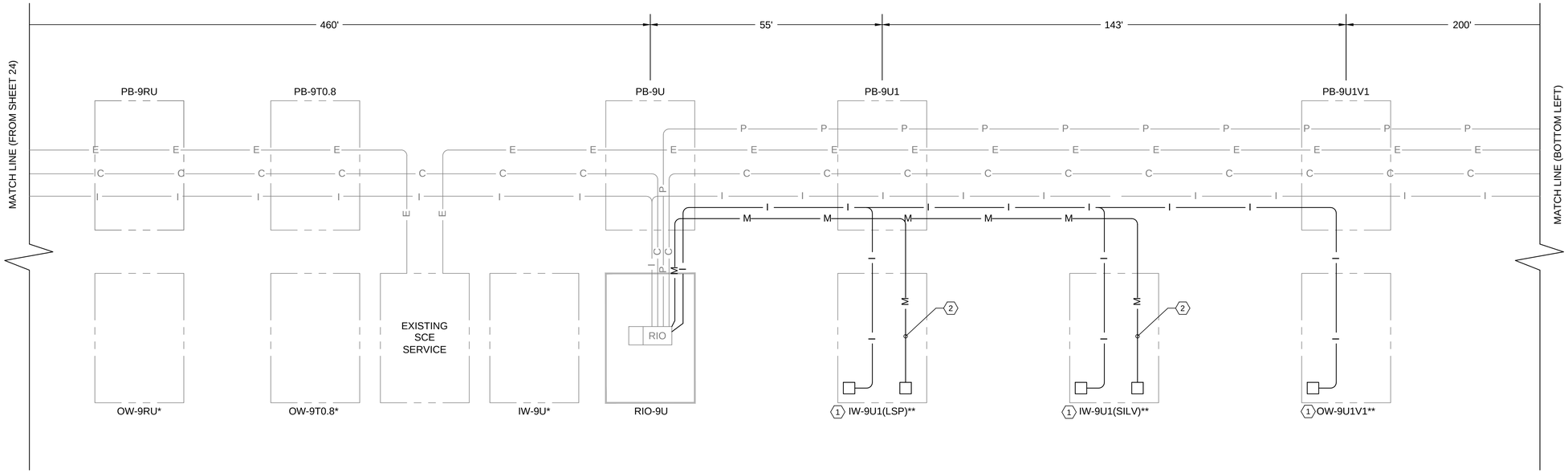

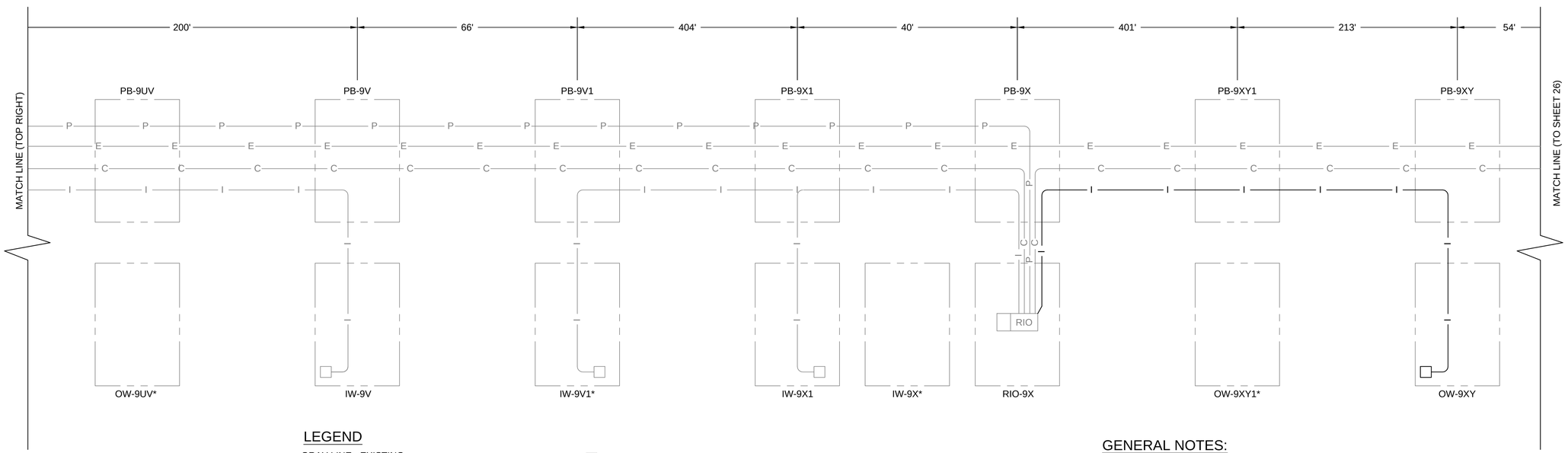

LEGEND

GRAY LINE - EXISTING

BLACK LINE - PHASE IIB SCOPE OF WORK

* INDICATES OPTIONAL WELL UNDER WCBBP PHASE II "OPTIONAL FACILITIES"

**INDICATES OPTIONAL WELL UNDER WCBBP PHASE IIB

□	INSTRUMENTS - SEE INSTRUMENT SCHEDULE FOR TYPE AND QUANTITY
—— C ——	FIBER OPTIC CABLE IN EXISTING CONDUIT
—— I ——	INSTRUMENTATION CABLE(S) IN EXISTING CONDUIT
—— P ——	24 VDC POWER WIRES IN CONDUIT
— — — —	AREA OF ENCLOSURE BOUNDARY
—— E ——	240 VAC POWER SUPPLY
—— M ——	NEW MAGNETIC FLOW SENSOR CABLE(S)
———	ABOVE GROUND RIO PANEL
RIO	REMOTE I/O

CONSTRUCTION NOTES:

1. INDICATES WELLS THAT WILL BE CONSTRUCTED UNDER A SEPARATE PROJECT.
2. INDICATES THAT MAGNETIC FLOW METER WILL BE INSTALLED UNDER A SEPARATE PROJECT.

GENERAL NOTES:

1. SEE INSTRUMENT SCHEDULE (SHEET 53-54) AND SCHEMATICS (SHEET 60-61) FOR FIELD INSTRUMENT CONNECTION REQUIREMENTS.
2. DISTANCES SHOWN ARE APPROXIMATE AND REQUIRE FIELD VERIFICATION.

TETRA TECH
www.tetratech.com
17885 Von Karman Avenue, Suite 500
Irvine, California 92614
Phone: 949-809-5000

DATE	BY	DESCRIPTION

REVISIONS

REGISTERED PROFESSIONAL ENGINEER — ANTHONY KARSSEN — No. E 15809 — Exp. 12-31-16 — ELECTRICAL — STATE OF CALIFORNIA

PROJECT ENGINEER DATE

COUNTY OF LOS ANGELES DEPARTMENT OF PUBLIC WORKS

WEST COAST BASIN BARRIER PROJECT
TELEMETRY SYSTEM - PHASE II B
SEGMENT 5
ONE-LINE DIAGRAM - 8

PROJECT ID: FCC0001280 | PCA EF11715001 | DWG 176-D153.25 | SHEET: 25 OF 63

DRAFTER ALH | DESIGNER NH | CHECKER MK | CADD PART NUMBER | REVIEWED BY | DATE

FILE NAME: $FILEL$

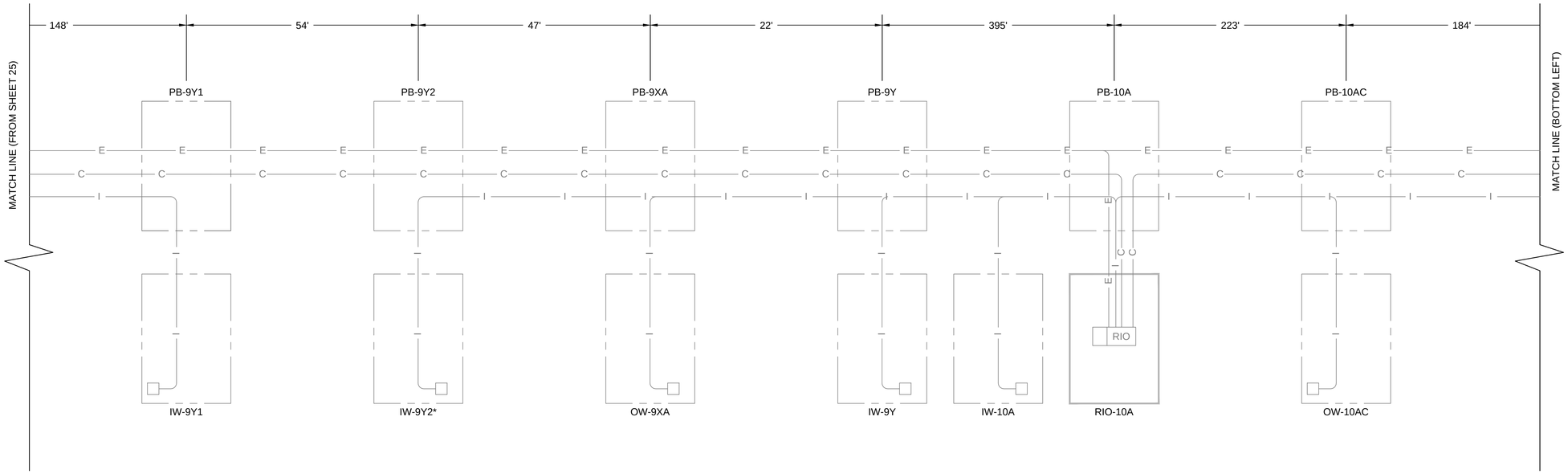

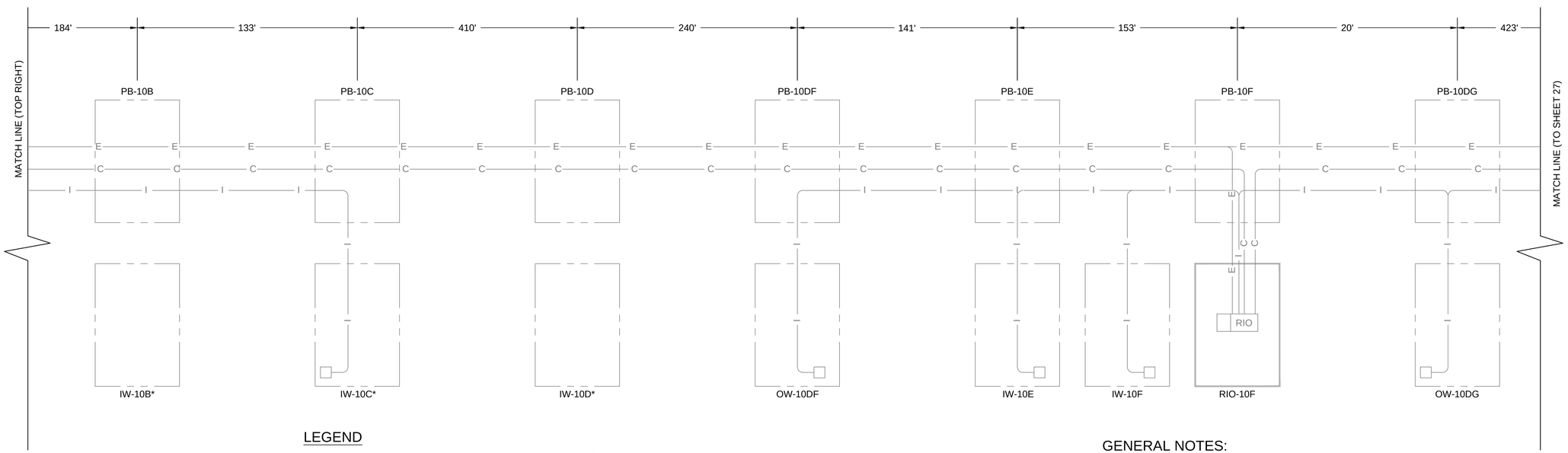

LEGEND

GRAY LINE - EXISTING

BLACK LINE - PHASE IIB SCOPE OF WORK

* INDICATES OPTIONAL WELL UNDER WCBBP PHASE II "OPTIONAL FACILITIES"

□	INSTRUMENTS - SEE INSTRUMENT SCHEDULE FOR TYPE AND QUANTITY
—— C ——	FIBER OPTIC CABLE IN EXISTING CONDUIT
—— I ——	INSTRUMENTATION CABLE(S) IN EXISTING CONDUIT
—— P ——	24 VDC POWER WIRES IN CONDUIT
— — — —	AREA OF ENCLOSURE BOUNDARY
—— E ——	240 VAC POWER SUPPLY
———	ABOVE GROUND RIO PANEL
RIO	REMOTE I/O

GENERAL NOTES:

1. SEE INSTRUMENT SCHEDULE (SHEET 53-54) AND SCHEMATICS (SHEET 60) FOR FIELD INSTRUMENT CONNECTION REQUIREMENTS.
2. DISTANCES SHOWN ARE APPROXIMATE AND REQUIRE FIELD VERIFICATION.

DATE	BY	DESCRIPTION

REVISIONS

REGISTERED PROFESSIONAL ENGINEER
AMIZEN KASSAB
No. E 15809
Exp. 12-31-16
ELECTRICAL
STATE OF CALIFORNIA

PROJECT ENGINEER DATE

COUNTY OF LOS ANGELES DEPARTMENT OF PUBLIC WORKS

WEST COAST BASIN BARRIER PROJECT
TELEMETRY SYSTEM - PHASE II B
SEGMENT 5
ONE-LINE DIAGRAM - 9

PROJECT ID: FCC0001280 | PCA EF11715001 | DWG 176-D153.26 | SHEET: 26 OF 63

TETRA TECH
www.tetratech.com
17885 Von Karman Avenue, Suite 500
Irvine, California 92614
Phone: 949-809-5000

DRAFTER ALH | DESIGNER NH | CHECKER MK | CADD PART NUMBER | REVIEWED BY | DATE

FILE NAME: $FILE$

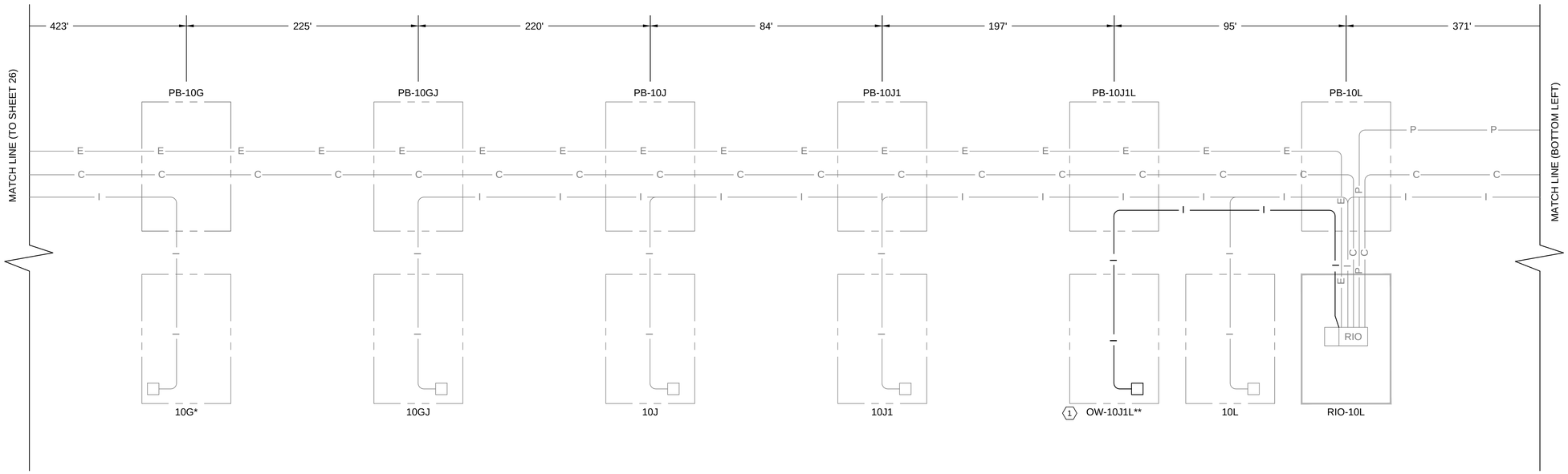

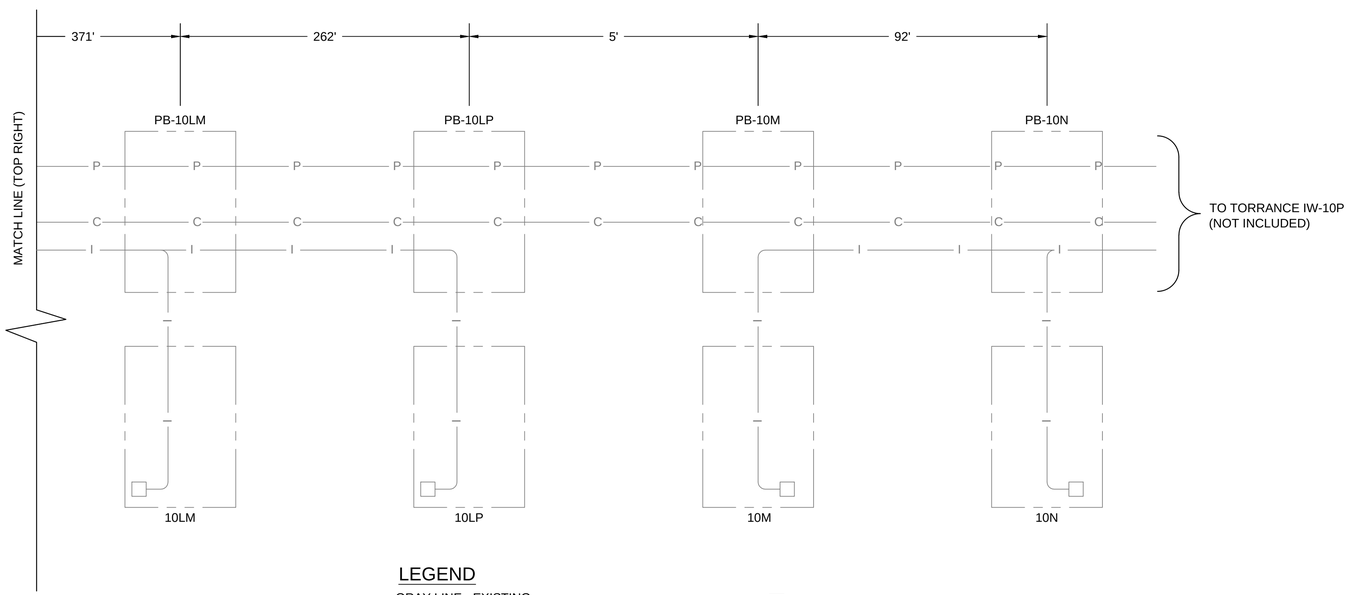

LEGEND

GRAY LINE - EXISTING

BLACK LINE - PHASE IIB SCOPE OF WORK

* INDICATES OPTIONAL WELL UNDER WCBBP PHASE II "OPTIONAL FACILITIES"

**INDICATES OPTIONAL WELL UNDER WCBBP PHASE IIB

□	INSTRUMENTS - SEE INSTRUMENT SCHEDULE FOR TYPE AND QUANTITY
——C——	FIBER OPTIC CABLE IN EXISTING CONDUIT
——I——	INSTRUMENTATION CABLE(S) IN EXISTING CONDUIT
——P——	24 VDC POWER WIRES IN CONDUIT
— — —	AREA OF ENCLOSURE BOUNDARY
——E——	240 VAC POWER SUPPLY
———	ABOVE GROUND RIO PANEL
RIO	REMOTE I/O

CONSTRUCTION NOTES:

1. INDICATES WELLS THAT WILL BE CONSTRUCTED UNDER A SEPERATE PROJECT

GENERAL NOTES:

1. SEE INSTRUMENT SCHEDULE (SHEET 53-54) AND SCHEMATICS (SHEET 60) FOR FIELD INSTRUMENT CONNECTION REQUIREMENTS.
2. DISTANCES SHOWN ARE APPROXIMATE AND REQUIRE FIELD VERIFICATION.

TETRA TECH
www.tetratech.com
17885 Von Karman Avenue, Suite 500
Irvine, California 92614
Phone: 949-809-5000

DATE	BY	DESCRIPTION

REVISIONS

REGISTERED PROFESSIONAL ENGINEER
JAMEEN KASSEF
No. E 15809
Exp. 12-31-16
ELECTRICAL
STATE OF CALIFORNIA

PROJECT ENGINEER DATE

COUNTY OF LOS ANGELES DEPARTMENT OF PUBLIC WORKS

WEST COAST BASIN BARRIER PROJECT
TELEMETRY SYSTEM - PHASE II B
SEGMENT 5
ONE-LINE DIAGRAM 10

PROJECT ID: FCC0001280 | PCA EF11715001 | DWG 176-D153.27 | SHEET: 27 OF 63

DRAFTER ALH | DESIGNER NH | CHECKER MK | CADD PART NUMBER | REVIEWED BY | DATE

FILE NAME: $FILE$

DATE	REVIEWED BY	CADD PART NUMBER	CHECKER	DESIGNER	DRAFTER
			MK	NH	ALH

TETRA TECH
www.tetratech.com
17885 Von Karman Avenue, Suite 500
Irvine, California 92614
Phone: 949-809-5000

DATE	BY	DESCRIPTION

REVISIONS

REGISTERED PROFESSIONAL ENGINEER
JAZEEN KASSABIAN
No. E 15809
Exp. 12-31-16
ELECTRICAL
STATE OF CALIFORNIA

PROJECT ENGINEER DATE

COUNTY OF LOS ANGELES DEPARTMENT OF PUBLIC WORKS

WEST COAST BASIN BARRIER PROJECT
TELEMETRY SYSTEM - PHASE II B
SEGMENT 1 OVERALL
SITE PLAN VIEW

PROJECT ID: FCC0001280 | PCA EF11715001 | DWG 176-D153.28 | SHEET: 28 OF 63

FILE NAME: $FILEL$

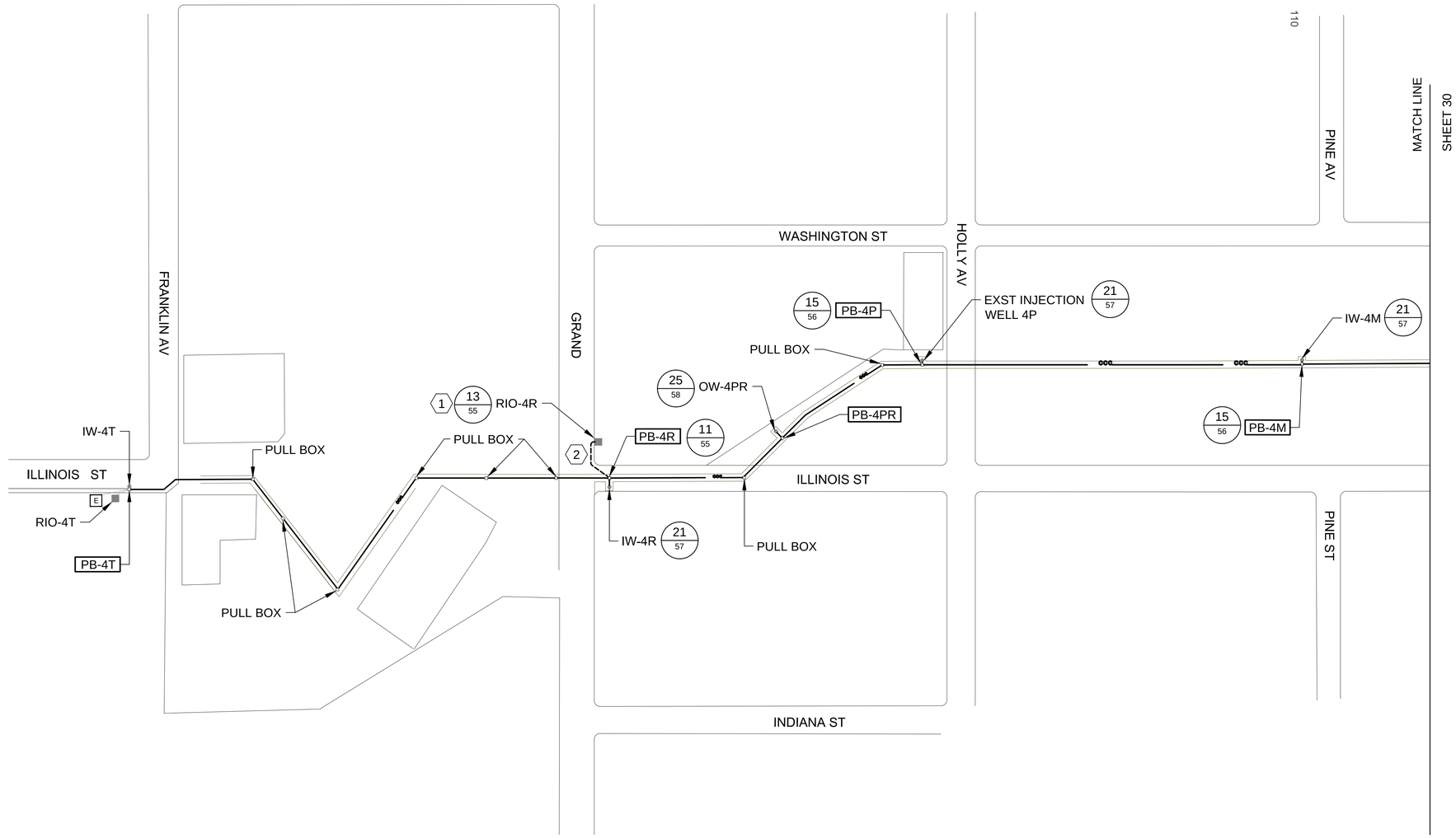

LEGEND

- E — ELECTRICAL METER
- ABOVE GROUND RIO CABINET
- PB (PULL BOX) (FLUSH WITH GROUND)
- OW (OBSERVATION WELL)
- IW (INJECTION WELL)
- ccc — EXISTING CONTROL AND COMMUNICATION CONDUIT (CCC) (2-2" CONDUITS)

N

0 40' 80' 160'
SCALE: 1"=80'

* INDICATES OPTIONAL WELL UNDER WCBBP PHASE II "OPTIONAL FACILITIES"
** INDICATES OPTIONAL WELLS UNDER WCBBP PHASE IIB

GENERAL NOTES:

1. UNLESS NOTED OTHERWISE, ALL CONDUIT, PULL BOXES AND ABOVE-GRADE ENCLOSURES WERE INSTALLED DURING CONSTRUCTION OF PHASE I AND PHASE IB. CONTRACTOR SHALL PERFORM INSTALLATION OF ALL WIRING WITHIN EXISTING PULL BOX AND CONDUIT INSTALLATIONS AND WHERE APPROVED BY PUBLIC WORKS.
2. INSTALL NEW RIO ENCLOSURE AS NOTED ON PLANS, INSTALL BACK PANELS AND CONTROL COMPONENTS IN ENCLOSURES AS DEFINED ON THE PANEL ELEVATIONS AND SCHEMATICS. PROVIDE COMPLETE ENCLOSURE ASSEMBLIES WHERE NOTED.
3. CONTRACTOR SHALL BE RESPONSIBLE FOR REPAIRING ANY DAMAGE THAT IS CAUSED BY THE CONTRACTOR TO EXISTING UNDERGROUND UTILITIES, IRRIGATION SYSTEM AND LANDSCAPING.
4. SEE DETAILS ON SHEET 55 AND 56 FOR TYPICAL PULL BOX CONFIGURATION.
5. SEE DETAILS ON SHEETS 56, 57, 58, AND 59 FOR WELL CONFIGURATION.
6. PROVIDE TRENCHING, BACKFILL, AND PAVEMENT RESTORATION FOR ALL NEW UNDERGROUND CONDUITS.

CONSTRUCTION NOTES:

1. PROVIDE NEW ABOVE GROUND ENCLOSURE
2. PROVIDE (2) 2-1/2" AND (1) 2" SCH 80 PVC CONDUITS BETWEEN PULL BOX AND ABOVE GROUND ENCLOSURE

TETRA TECH
www.tetratech.com
17885 Von Karman Avenue, Suite 500
Irvine, California 92614
Phone: 949-809-5000

DATE	BY	DESCRIPTION

REVISIONS

REGISTERED PROFESSIONAL ENGINEER
NAZEEM KASSAP
No. E 15809
Exp. 12-31-16
ELECTRICAL
STATE OF CALIFORNIA

PROJECT ENGINEER DATE

COUNTY OF LOS ANGELES DEPARTMENT OF PUBLIC WORKS

WEST COAST BASIN BARRIER PROJECT
TELEMETRY SYSTEM - PHASE II B
SEGMENT 1 PLAN WELL
4R, 4PR, 4P AND 4M

PROJECT ID: FCC0001280 | PCA EF11715001 | DWG 176-D153.29 | SHEET: 29 OF 63

DRAFTER ALH | DESIGNER NH | CHECKER MK | CADD PART NUMBER | REVIEWED BY | DATE

FILE NAME: $FILEL$

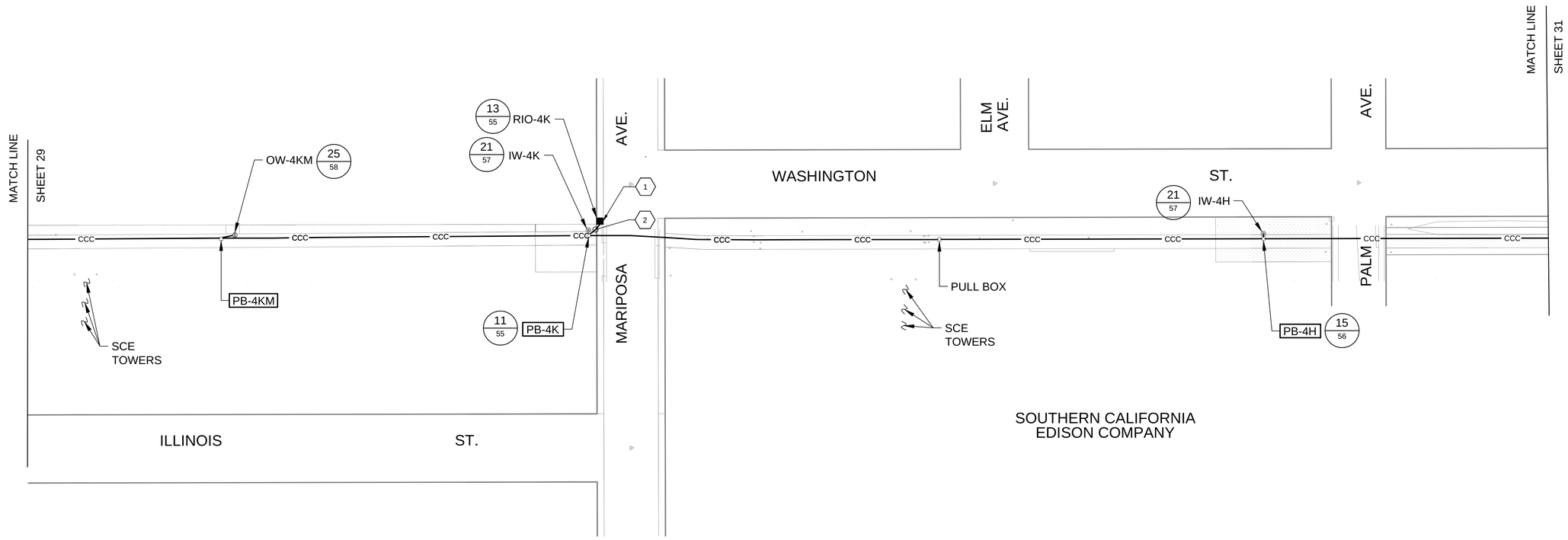

LEGEND

- E — ELECTRICAL METER
- ABOVE GROUND RIO CABINET
- PB (PULL BOX) (FLUSH WITH GROUND)
- OW (OBSERVATION WELL)
- IW (INJECTION WELL)
- ccc — EXISTING CONTROL AND COMMUNICATION CONDUIT (CCC) (2-2" CONDUITS)

N

0 20' 40' 80'
SCALE: 1"=40'

* INDICATES OPTIONAL WELL UNDER WCBBP PHASE II "OPTIONAL FACILITIES"
** INDICATES OPTIONAL WELLS UNDER WCBBP PHASE IIB

GENERAL NOTES:

1. UNLESS NOTED OTHERWISE, ALL CONDUIT, PULL BOXES AND ABOVE-GRADE ENCLOSURES WERE INSTALLED DURING CONSTRUCTION OF PHASE I AND PHASE IB. CONTRACTOR SHALL PERFORM INSTALLATION OF ALL WIRING WITHIN EXISTING PULL BOX AND CONDUIT INSTALLATIONS AND WHERE APPROVED BY PUBLIC WORKS.
2. INSTALL NEW RIO ENCLOSURE AS NOTED ON PLANS, INSTALL BACK PANELS AND CONTROL COMPONENTS IN ENCLOSURES AS DEFINED ON THE PANEL ELEVATIONS AND SCHEMATICS. PROVIDE COMPLETE ENCLOSURE ASSEMBLIES WHERE NOTED.
3. CONTRACTOR SHALL BE RESPONSIBLE FOR REPAIRING ANY DAMAGE THAT IS CAUSED BY THE CONTRACTOR TO EXISTING UNDERGROUND UTILITIES, IRRIGATION SYSTEM AND LANDSCAPING.
4. SEE DETAILS ON SHEET 55 AND 56 FOR TYPICAL PULL BOX CONFIGURATION.
5. SEE DETAILS ON SHEETS 56, 57, 58, AND 59 FOR WELL CONFIGURATION.
6. PROVIDE TRENCHING, BACKFILL, AND PAVEMENT RESTORATION FOR ALL NEW UNDERGROUND CONDUITS.

CONSTRUCTION NOTES:

1. PROVIDE NEW ABOVE GROUND ENCLOSURE
2. PROVIDE (2) 2-1/2" AND (1) 2" SCH 80 PVC CONDUITS BETWEEN PULL BOX AND ABOVE GROUND ENCLOSURE

DATE	BY	DESCRIPTION

REVISIONS

REGISTERED PROFESSIONAL ENGINEER
JAZEEN KASSABIAN
No. E 15809
Exp. 12-31-16
ELECTRICAL
STATE OF CALIFORNIA

PROJECT ENGINEER DATE

COUNTY OF LOS ANGELES DEPARTMENT OF PUBLIC WORKS

WEST COAST BASIN BARRIER PROJECT
TELEMETRY SYSTEM - PHASE II B
SEGMENT 1 PLAN WELL
4KM, 4K, AND 4H

PROJECT ID: FCC0001280 | PCA EF11715001 | DWG 176-D153.30 | SHEET: 30 OF 63

TETRA TECH
www.tetratech.com
17885 Von Karman Avenue, Suite 500
Irvine, California 92614
Phone: 949-809-5000

DRAFTER ALH | DESIGNER NH | CHECKER MK | CADD PART NUMBER | REVIEWED BY | DATE

FILE NAME: $FILE$

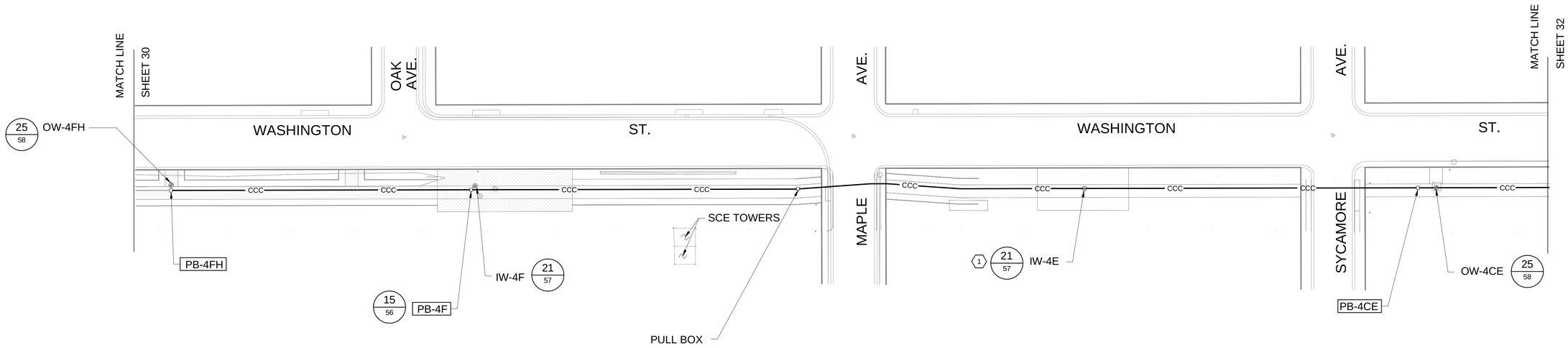

LEGEND

- E — ELECTRICAL METER
- ABOVE GROUND RIO CABINET
- PB (PULL BOX) (FLUSH WITH GROUND)
- OW (OBSERVATION WELL)
- IW (INJECTION WELL)
- CCC — EXISTING CONTROL AND COMMUNICATION CONDUIT (CCC) (2-2" CONDUITS)

N

0 20' 40' 80'
SCALE: 1"=40'

* INDICATES OPTIONAL WELL UNDER WCBBP PHASE II "OPTIONAL FACILITIES"
** INDICATES OPTIONAL WELLS UNDER WCBBP PHASE IIB

GENERAL NOTES:

1. UNLESS NOTED OTHERWISE, ALL CONDUIT, PULL BOXES AND ABOVE-GRADE ENCLOSURES WERE INSTALLED DURING CONSTRUCTION OF PHASE I AND PHASE IB. CONTRACTOR SHALL PERFORM INSTALLATION OF ALL WIRING WITHIN EXISTING PULL BOX AND CONDUIT INSTALLATIONS AND WHERE APPROVED BY PUBLIC WORKS.
2. INSTALL NEW RIO ENCLOSURE AS NOTED ON PLANS, INSTALL BACK PANELS AND CONTROL COMPONENTS IN ENCLOSURES AS DEFINED ON THE PANEL ELEVATIONS AND SCHEMATICS. PROVIDE COMPLETE ENCLOSURE ASSEMBLIES WHERE NOTED.
3. CONTRACTOR SHALL BE RESPONSIBLE FOR REPAIRING ANY DAMAGE THAT IS CAUSED BY THE CONTRACTOR TO EXISTING UNDERGROUND UTILITIES, IRRIGATION SYSTEM AND LANDSCAPING.
4. SEE DETAILS ON SHEET 55 AND 56 FOR TYPICAL PULL BOX CONFIGURATION.
5. SEE DETAILS ON SHEETS 56, 57, 58, AND 59 FOR WELL CONFIGURATION.
6. PROVIDE TRENCHING, BACKFILL, AND PAVEMENT RESTORATION FOR ALL NEW UNDERGROUND CONDUITS.

CONSTRUCTION NOTES:

1. EXISTING INJECTION WELL VAULT IS UTILIZED AS A PULL BOX.

TETRA TECH
www.tetratech.com
17885 Von Karman Avenue, Suite 500
Irvine, California 92614
Phone: 949-809-5000

DATE	BY	DESCRIPTION

REVISIONS

REGISTERED PROFESSIONAL ENGINEER
JAMEEN KASSAPIAN
No. E 15809
Exp. 12-31-16
ELECTRICAL
STATE OF CALIFORNIA

PROJECT ENGINEER DATE

COUNTY OF LOS ANGELES DEPARTMENT OF PUBLIC WORKS

WEST COAST BASIN BARRIER PROJECT
TELEMETRY SYSTEM - PHASE II B
SEGMENT 1 PLAN WELL
4FH, 4F, 4E AND 4CE

PROJECT ID: FCC0001280 | PCA EF11715001 | DWG 176-D153.31 | SHEET: 31 OF 63

DRAFTER ALH | DESIGNER NH | CHECKER MK | CADD PART NUMBER | REVIEWED BY | DATE

FILE NAME: $FILE$

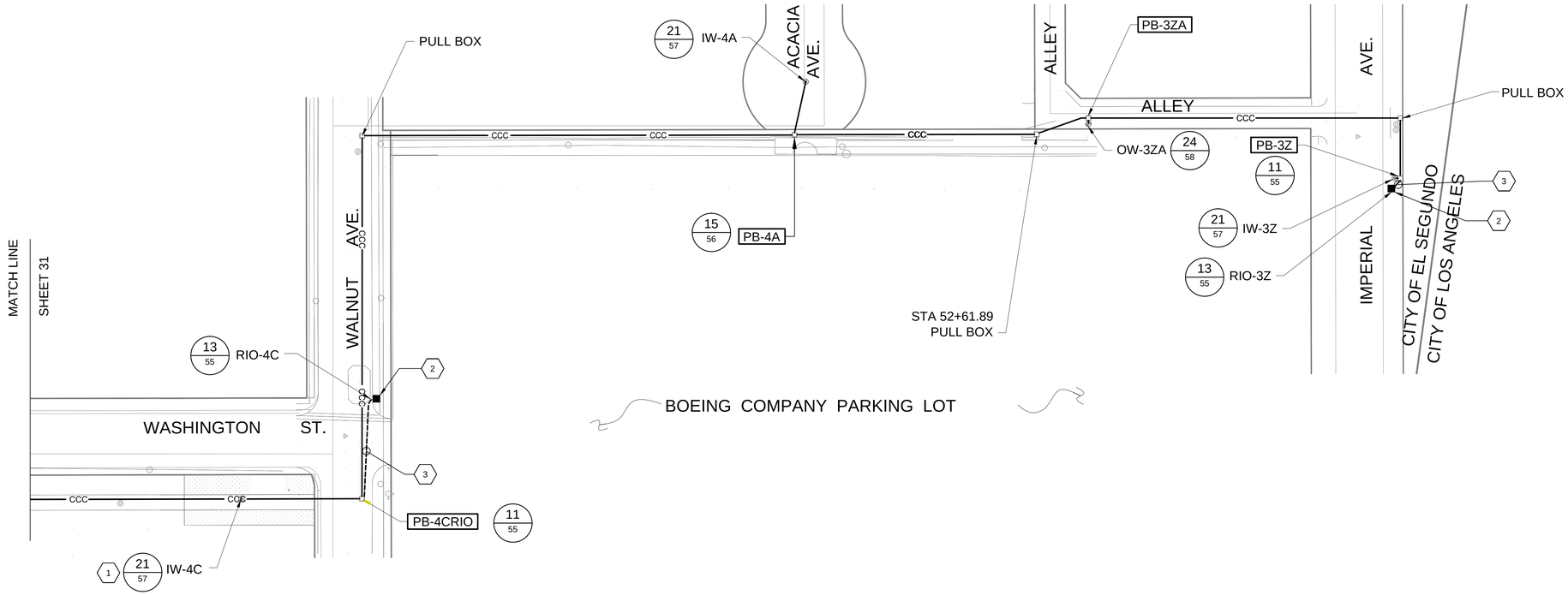

LEGEND

- E — ELECTRICAL METER
- ABOVE GROUND RIO CABINET
- PB (PULL BOX) (FLUSH WITH GROUND)
- OW (OBSERVATION WELL)
- IW (INJECTION WELL)
- —CCC— EXISTING CONTROL AND COMMUNICATION CONDUIT (CCC) (2-2" CONDUITS)

N

0 20' 40' 80'
SCALE: 1"=40'

* INDICATES OPTIONAL WELL UNDER WCBBP PHASE II "OPTIONAL FACILITIES"
** INDICATES OPTIONAL WELLS UNDER WCBBP PHASE IIB

GENERAL NOTES:

1. UNLESS NOTED OTHERWISE, ALL CONDUIT, PULL BOXES AND ABOVE-GRADE ENCLOSURES WERE INSTALLED DURING CONSTRUCTION OF PHASE I AND PHASE IB. CONTRACTOR SHALL PERFORM INSTALLATION OF ALL WIRING WITHIN EXISTING PULL BOX AND CONDUIT INSTALLATIONS AND WHERE APPROVED BY PUBLIC WORKS.
2. INSTALL NEW RIO ENCLOSURE AS NOTED ON PLANS, INSTALL BACK PANELS AND CONTROL COMPONENTS IN ENCLOSURES AS DEFINED ON THE PANEL ELEVATIONS AND SCHEMATICS. PROVIDE COMPLETE ENCLOSURE ASSEMBLIES WHERE NOTED.
3. CONTRACTOR SHALL BE RESPONSIBLE FOR REPAIRING ANY DAMAGE THAT IS CAUSED BY THE CONTRACTOR TO EXISTING UNDERGROUND UTILITIES, IRRIGATION SYSTEM AND LANDSCAPING.
4. SEE DETAILS ON SHEET 55 AND 56 FOR TYPICAL PULL BOX CONFIGURATION.
5. SEE DETAILS ON SHEETS 56, 57, 58, AND 59 FOR WELL CONFIGURATION.
6. PROVIDE TRENCHING, BACKFILL, AND PAVEMENT RESTORATION FOR ALL NEW UNDERGROUND CONDUITS.

CONSTRUCTION NOTES:

1. EXISTING INJECTION WELL VAULT IS UTILIZED AS A PULL BOX.
2. PROVIDE NEW ABOVE GROUND ENCLOSURE
3. PROVIDE (2) 2-1/2" AND (1) 2" SCH 80 PVC CONDUITS BETWEEN PULL BOX AND ABOVE GROUND ENCLOSURE

TETRA TECH
www.tetratech.com
17885 Von Karman Avenue, Suite 500
Irvine, California 92614
Phone: 949-809-5000

DATE	BY	DESCRIPTION

REVISIONS

REGISTERED PROFESSIONAL ENGINEER JOSEPH KASSAP No. E 15809 Exp. 12-31-16 ELECTRICAL STATE OF CALIFORNIA

PROJECT ENGINEER DATE

COUNTY OF LOS ANGELES DEPARTMENT OF PUBLIC WORKS

WEST COAST BASIN BARRIER PROJECT
TELEMETRY SYSTEM - PHASE II B
SEGMENT 1 PLAN WELL
4C, 4A, 3ZA AND 3Z

PROJECT ID: FCC0001280 | PCA EF11715001 | DWG 176-D153.32 | SHEET: 32 OF 63

DRAFTER ALH | DESIGNER NH | CHECKER MK | CADD PART NUMBER | REVIEWED BY | DATE

FILE NAME: $FILEL$

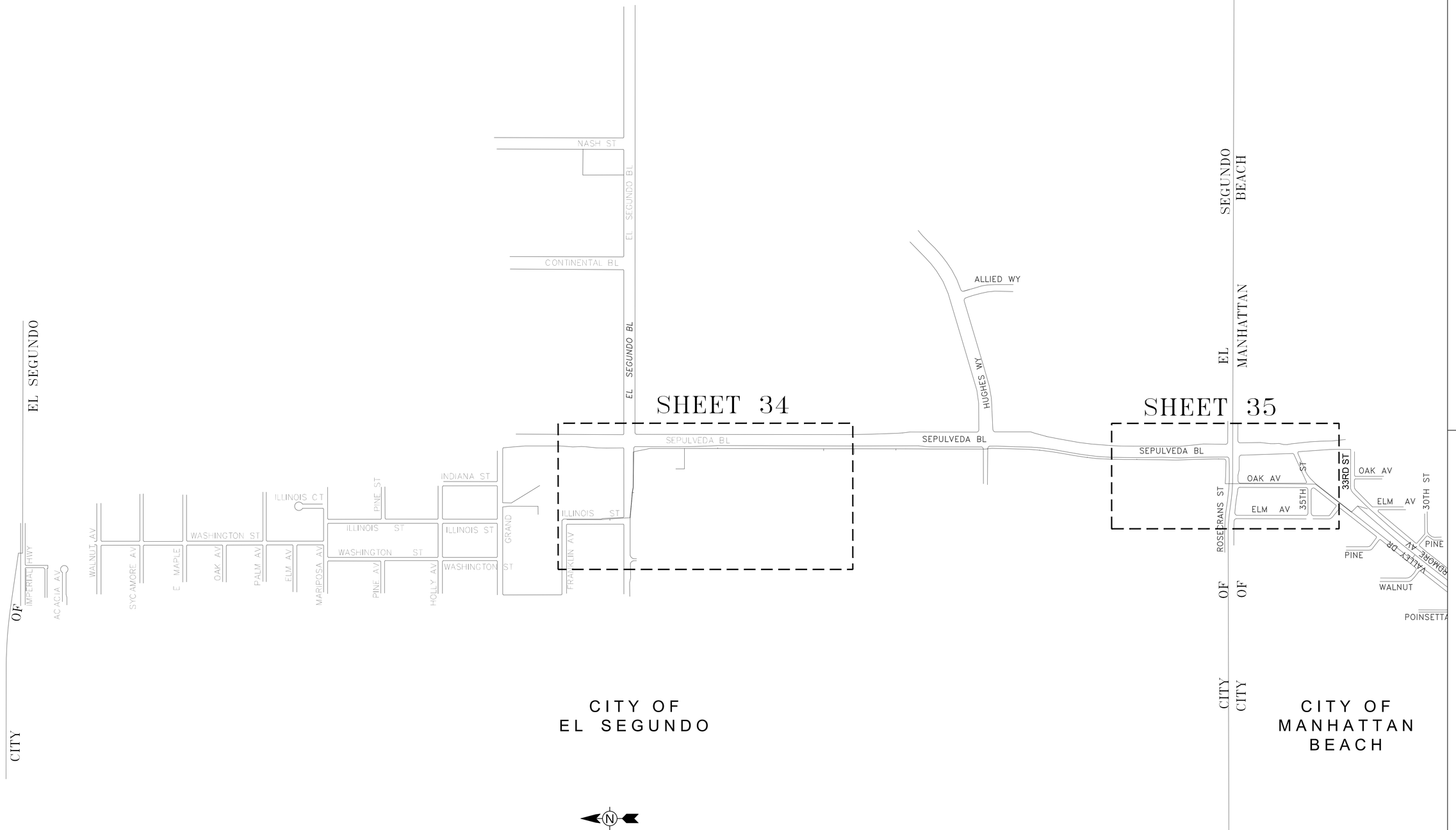

DATE	BY	DESCRIPTION

REVISIONS

REGISTERED PROFESSIONAL ENGINEER
JAZEEN KASSAB
No. E 15809
Exp. 12-31-16
ELECTRICAL
STATE OF CALIFORNIA

PROJECT ENGINEER DATE

COUNTY OF LOS ANGELES DEPARTMENT OF PUBLIC WORKS

WEST COAST BASIN BARRIER PROJECT
TELEMETRY SYSTEM - PHASE II B
SEGMENT 2 OVERALL
SITE PLAN VIEW

PROJECT ID: FCC0001280 | PCA EF11715001 | DWG 176-D153.33 | SHEET: 33 OF 63

TETRA TECH
www.tetratech.com
17885 Von Karman Avenue, Suite 500
Irvine, California 92614
Phone: 949-809-5000

DRAFTER ALH | DESIGNER NH | CHECKER MK | CADD PART NUMBER | REVIEWED BY | DATE

FILE NAME: $FILEL$

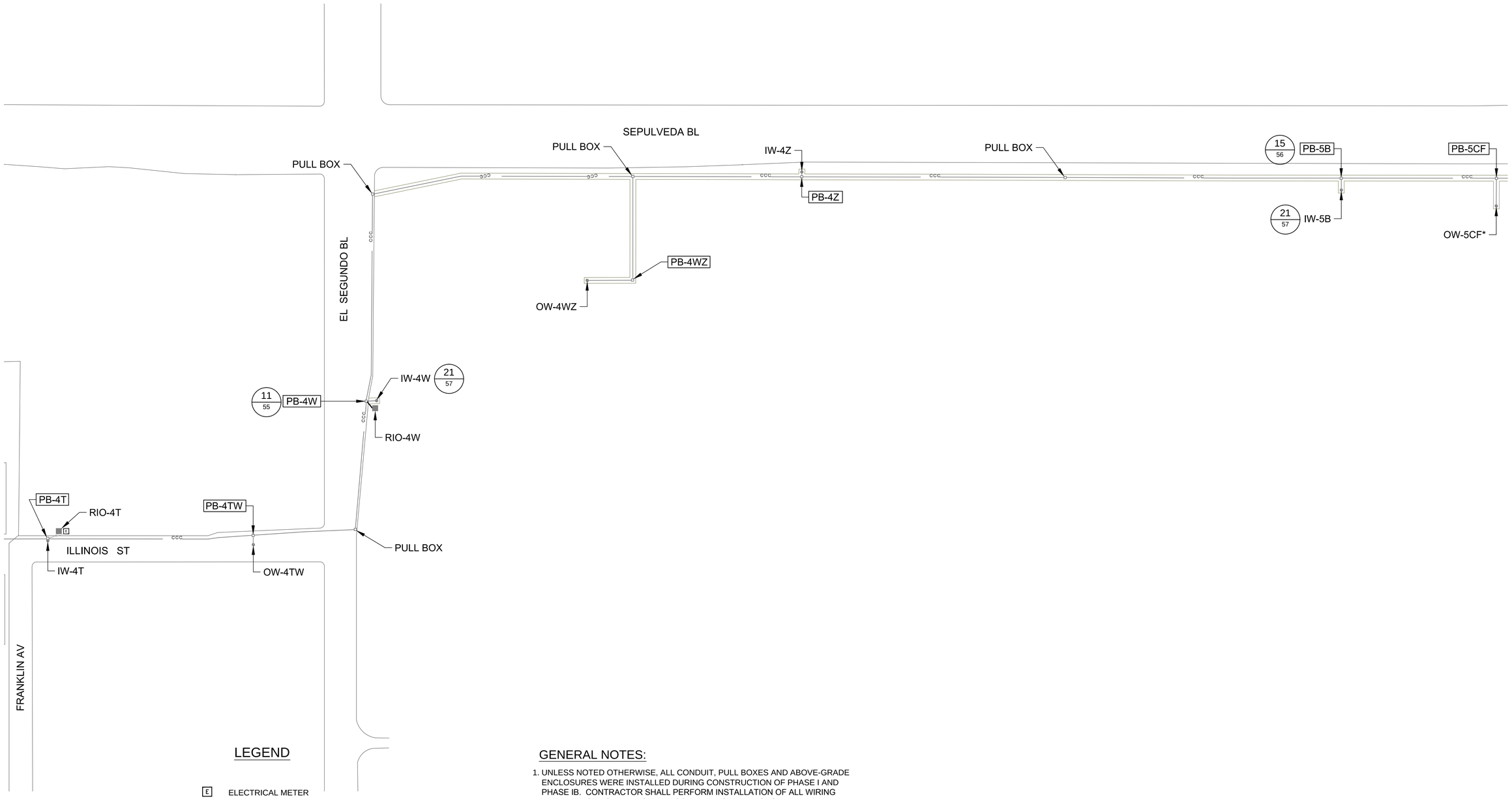

LEGEND

- E — ELECTRICAL METER
- ABOVE GROUND RIO CABINET
- PB (PULL BOX) (FLUSH WITH GROUND)
- OW (OBSERVATION WELL)
- IW (INJECTION WELL)
- CCC — EXISTING CONTROL AND COMMUNICATION CONDUIT (CCC) (2-2" CONDUITS)

N

0 40' 80' 160'
SCALE: 1"=80'

TETRA TECH
www.tetratech.com
17885 Von Karman Avenue, Suite 500
Irvine, California 92614
Phone: 949-809-5000

* INDICATES OPTIONAL WELL UNDER WCBBP PHASE II "OPTIONAL FACILITIES"
** INDICATES OPTIONAL WELLS UNDER WCBBP PHASE IIB

GENERAL NOTES:

1. UNLESS NOTED OTHERWISE, ALL CONDUIT, PULL BOXES AND ABOVE-GRADE ENCLOSURES WERE INSTALLED DURING CONSTRUCTION OF PHASE I AND PHASE IB. CONTRACTOR SHALL PERFORM INSTALLATION OF ALL WIRING WITHIN EXISTING PULL BOX AND CONDUIT INSTALLATIONS AND WHERE APPROVED BY PUBLIC WORKS.
2. INSTALL NEW RIO ENCLOSURE AS NOTED ON PLANS, INSTALL BACK PANELS AND CONTROL COMPONENTS IN ENCLOSURES AS DEFINED ON THE PANEL ELEVATIONS AND SCHEMATICS. PROVIDE COMPLETE ENCLOSURE ASSEMBLIES WHERE NOTED.
3. CONTRACTOR SHALL BE RESPONSIBLE FOR REPAIRING ANY DAMAGE THAT IS CAUSED BY THE CONTRACTOR TO EXISTING UNDERGROUND UTILITIES, IRRIGATION SYSTEM AND LANDSCAPING.
4. SEE DETAILS ON SHEET 55 AND 56 FOR TYPICAL PULL BOX CONFIGURATION.
5. SEE DETAILS ON SHEETS 56, 57, 58, AND 59 FOR WELL CONFIGURATION.
6. PROVIDE TRENCHING, BACKFILL, AND PAVEMENT RESTORATION FOR ALL NEW UNDERGROUND CONDUITS.

DATE	BY	DESCRIPTION

REVISIONS

REGISTERED PROFESSIONAL ENGINEER
NAEEM KASSEF
No. E 15809
Exp. 12-31-16
ELECTRICAL
STATE OF CALIFORNIA

PROJECT ENGINEER DATE

COUNTY OF LOS ANGELES DEPARTMENT OF PUBLIC WORKS

WEST COAST BASIN BARRIER PROJECT
TELEMETRY SYSTEM - PHASE II B
SEGMENT 2 PLAN
WELL 4W AND 5B

PROJECT ID: FCC0001280 | PCA EF11715001 | DWG 176-D153.34 | SHEET: 34 OF 63

DRAFTER ALH | DESIGNER NH | CHECKER MK | CADD PART NUMBER | REVIEWED BY | DATE

FILE NAME: $FILE$

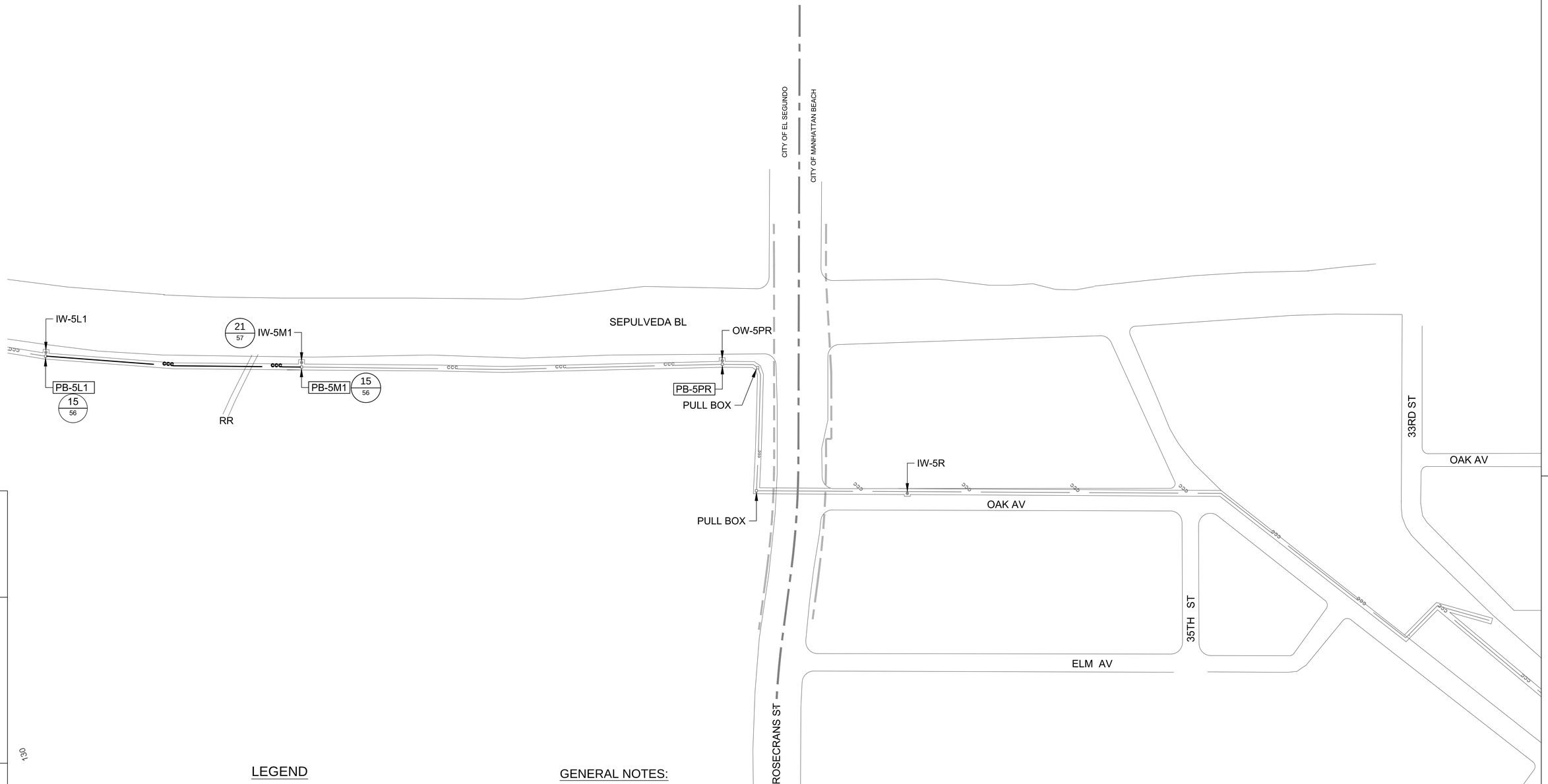

LEGEND

- E — ELECTRICAL METER
- ABOVE GROUND RIO CABINET
- PB (PULL BOX) (FLUSH WITH GROUND)
- OW (OBSERVATION WELL)
- IW (INJECTION WELL)
- —ccc— EXISTING CONTROL AND COMMUNICATION CONDUIT (CCC) (2-2" CONDUITS)

N

0 40' 80' 160'
SCALE: 1"=80'

* INDICATES OPTIONAL WELL UNDER WCBBP PHASE II "OPTIONAL FACILITIES"
** INDICATES OPTIONAL WELLS UNDER WCBBP PHASE IIB

GENERAL NOTES:

1. UNLESS NOTED OTHERWISE, ALL CONDUIT, PULL BOXES AND ABOVE-GRADE ENCLOSURES WERE INSTALLED DURING CONSTRUCTION OF PHASE I AND PHASE IB. CONTRACTOR SHALL PERFORM INSTALLATION OF ALL WIRING WITHIN EXISTING PULL BOX AND CONDUIT INSTALLATIONS AND WHERE APPROVED BY PUBLIC WORKS.
2. INSTALL NEW RIO ENCLOSURE AS NOTED ON PLANS, INSTALL BACK PANELS AND CONTROL COMPONENTS IN ENCLOSURES AS DEFINED ON THE PANEL ELEVATIONS AND SCHEMATICS. PROVIDE COMPLETE ENCLOSURE ASSEMBLIES WHERE NOTED.
3. CONTRACTOR SHALL BE RESPONSIBLE FOR REPAIRING ANY DAMAGE THAT IS CAUSED BY THE CONTRACTOR TO EXISTING UNDERGROUND UTILITIES, IRRIGATION SYSTEM AND LANDSCAPING.
4. SEE DETAILS ON SHEET 55 AND 56 FOR TYPICAL PULL BOX CONFIGURATION.
5. SEE DETAILS ON SHEETS 56, 57, 58, AND 59 FOR WELL CONFIGURATION.
6. PROVIDE TRENCHING, BACKFILL, AND PAVEMENT RESTORATION FOR ALL NEW UNDERGROUND CONDUITS.

TETRA TECH
www.tetratech.com
17885 Von Karman Avenue, Suite 500
Irvine, California 92614
Phone: 949-809-5000

DATE	BY	DESCRIPTION

REVISIONS

REGISTERED PROFESSIONAL ENGINEER — MATTHEW KASSEP — No. E 15809 — Exp. 12-31-16 — ELECTRICAL — STATE OF CALIFORNIA

PROJECT ENGINEER DATE

COUNTY OF LOS ANGELES DEPARTMENT OF PUBLIC WORKS

WEST COAST BASIN BARRIER PROJECT
TELEMETRY SYSTEM - PHASE II B
SEGMENT 2 PLAN
WELL 5M1

PROJECT ID: FCC0001280 | PCA EF11715001 | DWG 176-D153.35 | SHEET: 35 OF 63

DRAFTER	DESIGNER	CHECKER	CADD PART NUMBER	REVIEWED BY	DATE
ALH	NH	MK	130		

FILE NAME: $FILE$

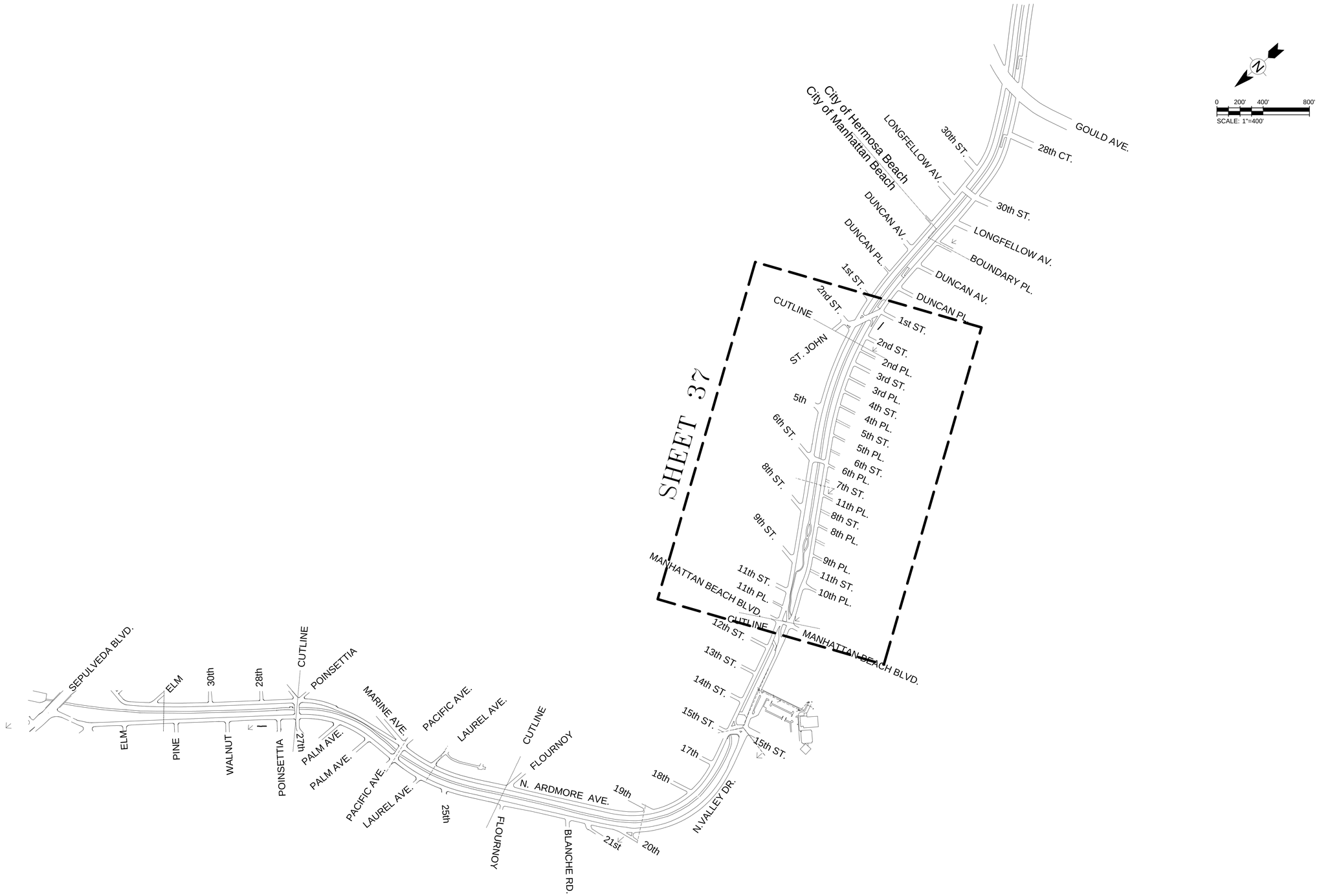

DRAFTER	DESIGNER	CHECKER	CADD PART NUMBER	REVIEWED BY	DATE
ALH	NH	MK			

FILE NAME: $FILE$

TETRA TECH

www.tetratech.com
17885 Von Karman Avenue, Suite 500
Irvine, California 92614
Phone: 949-809-5000

DATE	BY	DESCRIPTION

REVISIONS

REGISTERED PROFESSIONAL ENGINEER
JAZZEN KASSAP
No. E 15809
Exp. 12-31-16
ELECTRICAL
STATE OF CALIFORNIA

PROJECT ENGINEER DATE

COUNTY OF LOS ANGELES DEPARTMENT OF PUBLIC WORKS

WEST COAST BASIN BARRIER PROJECT
TELEMETRY SYSTEM - PHASE II B
SEGMENT 3 OVERALL
SITE PLAN VIEW

PROJECT ID: FCC0001280 | PCA EF11715001 | DWG 176-D153.36 | SHEET: 36 OF 63

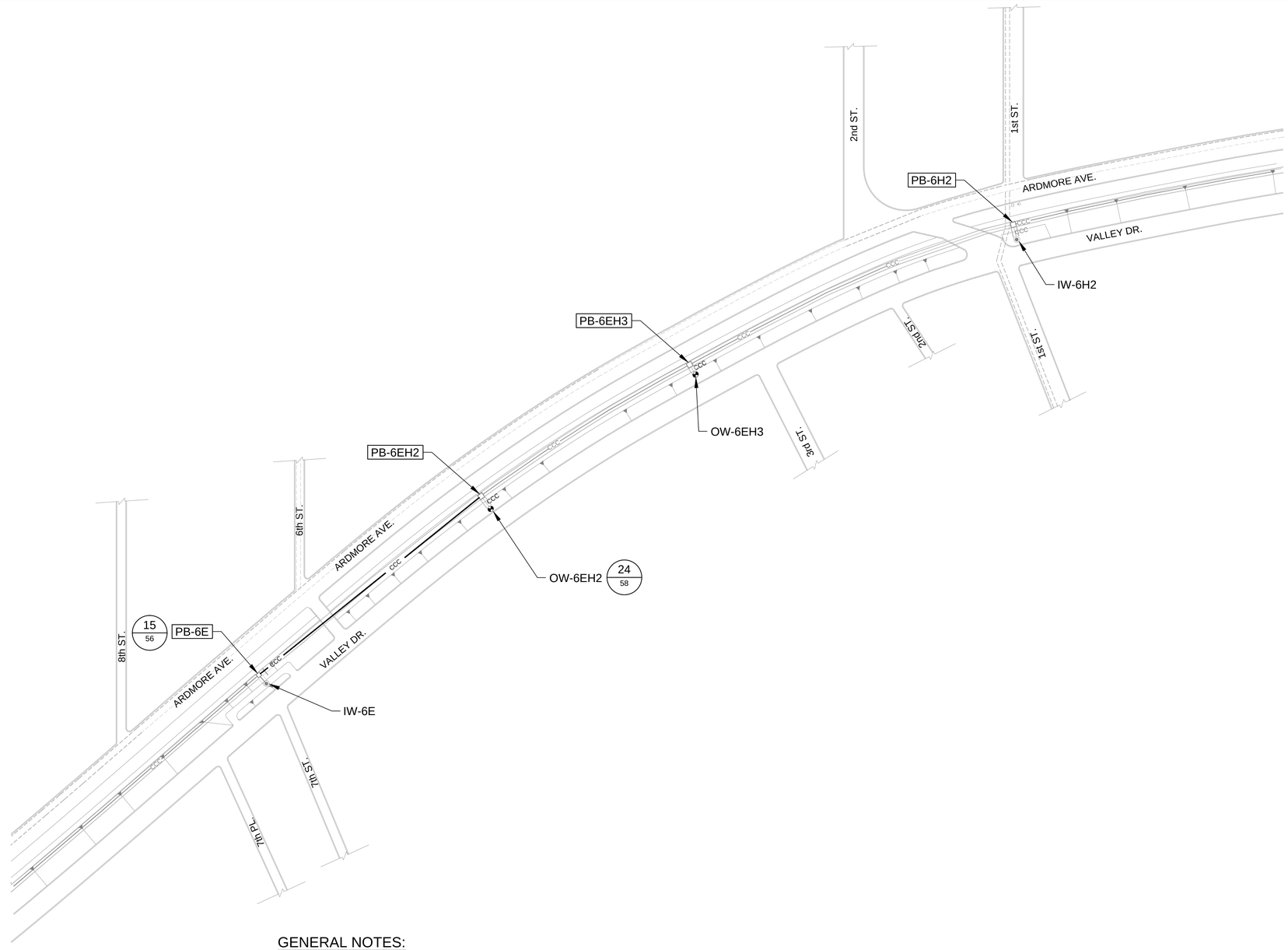

LEGEND

- E — ELECTRICAL METER
- ABOVE GROUND RIO CABINET
- PB (PULL BOX) (FLUSH WITH GROUND)
- OW (OBSERVATION WELL)
- IW (INJECTION WELL)
- —CCC— EXISTING CONTROL AND COMMUNICATION CONDUIT (CCC) (2-2" CONDUITS)

* INDICATES OPTIONAL WELL UNDER WCBBP PHASE II "OPTIONAL FACILITIES"

** INDICATES OPTIONAL WELLS UNDER WCBBP PHASE IIB

GENERAL NOTES:

1. UNLESS NOTED OTHERWISE, ALL CONDUIT, PULL BOXES AND ABOVE-GRADE ENCLOSURES WERE INSTALLED DURING CONSTRUCTION OF PHASE I AND PHASE IB. CONTRACTOR SHALL PERFORM INSTALLATION OF ALL WIRING WITHIN EXISTING PULL BOX AND CONDUIT INSTALLATIONS AND WHERE APPROVED BY PUBLIC WORKS.
2. INSTALL NEW RIO ENCLOSURE AS NOTED ON PLANS, INSTALL BACK PANELS AND CONTROL COMPONENTS IN ENCLOSURES AS DEFINED ON THE PANEL ELEVATIONS AND SCHEMATICS. PROVIDE COMPLETE ENCLOSURE ASSEMBLIES WHERE NOTED.
3. CONTRACTOR SHALL BE RESPONSIBLE FOR REPAIRING ANY DAMAGE THAT IS CAUSED BY THE CONTRACTOR TO EXISTING UNDERGROUND UTILITIES, IRRIGATION SYSTEM AND LANDSCAPING.
4. SEE DETAILS ON SHEET 55 AND 56 FOR TYPICAL PULL BOX CONFIGURATION.
5. SEE DETAILS ON SHEETS 56, 57, 58, AND 59 FOR WELL CONFIGURATION.
6. PROVIDE TRENCHING, BACKFILL, AND PAVEMENT RESTORATION FOR ALL NEW UNDERGROUND CONDUITS.

N

0 50' 100' 200'

SCALE: 1"=100'

TETRA TECH
www.tetratech.com
17885 Von Karman Avenue, Suite 500
Irvine, California 92614
Phone: 949-809-5000

DATE	BY	DESCRIPTION

REVISIONS

REGISTERED PROFESSIONAL ENGINEER
JAZEEN KASSAP
No. E 15809
Exp. 12-31-16
ELECTRICAL
STATE OF CALIFORNIA

PROJECT ENGINEER DATE

COUNTY OF LOS ANGELES DEPARTMENT OF PUBLIC WORKS

WEST COAST BASIN BARRIER PROJECT
TELEMETRY SYSTEM - PHASE II B
SEGMENT 3 PLAN
WELL 6EH2

PROJECT ID: FCC0001280 | PCA EF11715001 | DWG 176-D153.37 | SHEET: 37 OF 63

DRAFTER ALH | DESIGNER NH | CHECKER MK | CADD PART NUMBER | REVIEWED BY | DATE

FILE NAME: $FILEL$

SHEET 39
CITY OF REDONDO BEACH
CITY OF HERMOSA BEACH
CITY OF MANHATTAN BEACH
CITY OF HERMOSA BEACH
CITY OF REDONDO BEACH
PACIFIC OCEAN
PROSPECT AV
VANDERBILT LN
CORRA LN
SCOTT ST
ESTELLE ST
MARSHALL ST
MASSEY AV
HOLLOWELL AV
GENTRY ST
OMOSO AV
OCEAN DR
ROYAL ST
ROYAL PL
ROYAL TER
ROYAL LN
ROYAL RUN
ROYAL PLAZA
ROYAL VIEW
ROYAL CREST
ROYAL CIR
ROYAL GARDEN
ROYAL ROW
ROYAL ISLE
ROYAL PALMS
ROYAL PLACE
ROYAL ROAD
ROYAL ROSE
ROYAL ROSE
ROYAL ROSE

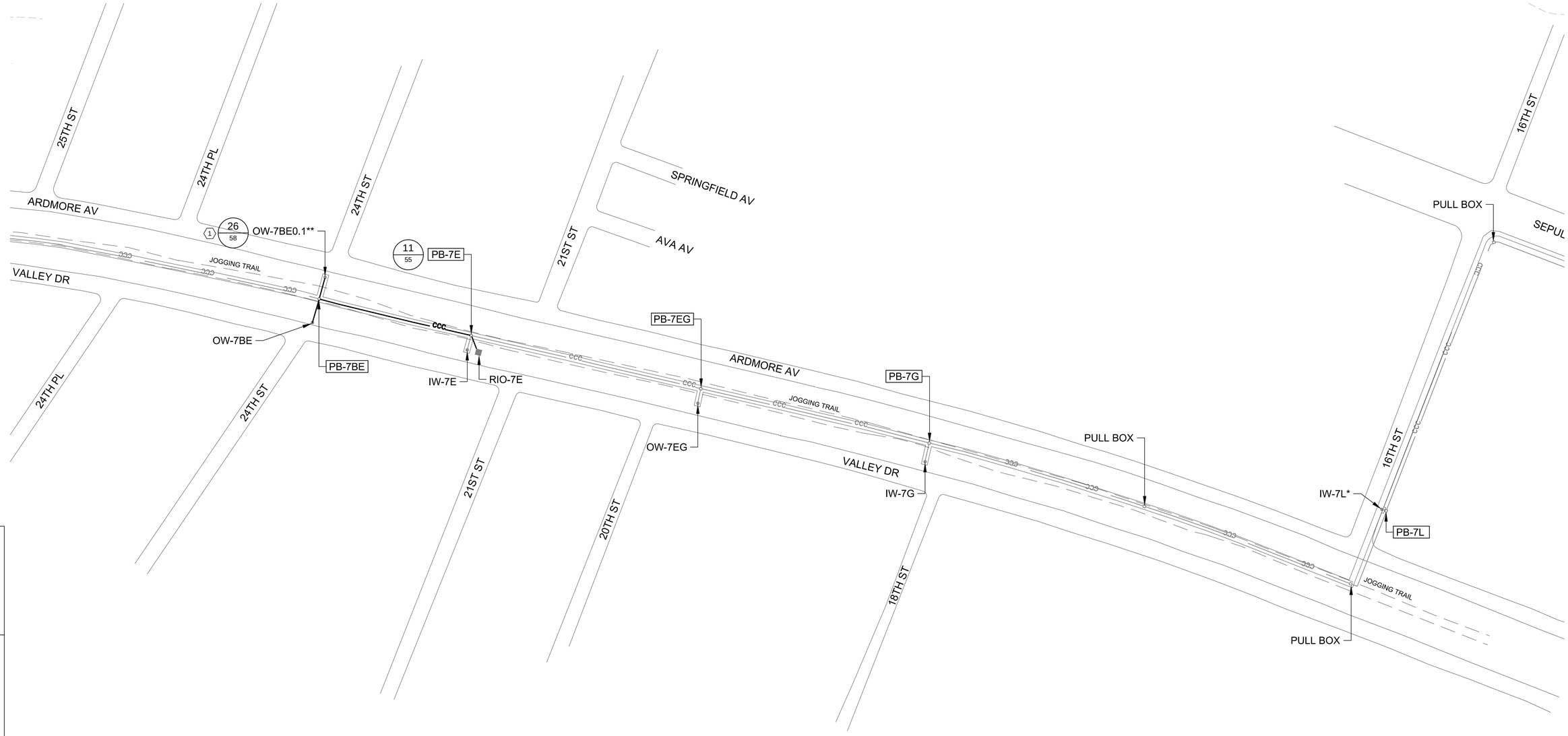

LEGEND

- E — ELECTRICAL METER
- ABOVE GROUND RIO CABINET
- PB (PULL BOX) (FLUSH WITH GROUND)
- OW (OBSERVATION WELL)
- IW (INJECTION WELL)
- —CCC— EXISTING CONTROL AND COMMUNICATION CONDUIT (CCC) (2-2" CONDUITS)

N

0 40' 80' 160'

SCALE: 1"=80'

TETRA TECH

www.tetratech.com
17885 Von Karman Avenue, Suite 500
Irvine, California 92614
Phone: 949-809-5000

* INDICATES OPTIONAL WELL UNDER WCBBP PHASE II "OPTIONAL FACILITIES"
** INDICATES OPTIONAL WELLS UNDER WCBBP PHASE IIB

GENERAL NOTES:

1. UNLESS NOTED OTHERWISE, ALL CONDUIT, PULL BOXES AND ABOVE-GRADE ENCLOSURES WERE INSTALLED DURING CONSTRUCTION OF PHASE I AND PHASE IB. CONTRACTOR SHALL PERFORM INSTALLATION OF ALL WIRING WITHIN EXISTING PULL BOX AND CONDUIT INSTALLATIONS AND WHERE APPROVED BY PUBLIC WORKS.
2. INSTALL NEW RIO ENCLOSURE AS NOTED ON PLANS, INSTALL BACK PANELS AND CONTROL COMPONENTS IN ENCLOSURES AS DEFINED ON THE PANEL ELEVATIONS AND SCHEMATICS. PROVIDE COMPLETE ENCLOSURE ASSEMBLIES WHERE NOTED.
3. CONTRACTOR SHALL BE RESPONSIBLE FOR REPAIRING ANY DAMAGE THAT IS CAUSED BY THE CONTRACTOR TO EXISTING UNDERGROUND UTILITIES, IRRIGATION SYSTEM AND LANDSCAPING.
4. SEE DETAILS ON SHEET 55 AND 56 FOR TYPICAL PULL BOX CONFIGURATION.
5. SEE DETAILS ON SHEETS 56, 57, 58, AND 59 FOR WELL CONFIGURATION.
6. PROVIDE TRENCHING, BACKFILL, AND PAVEMENT RESTORATION FOR ALL NEW UNDERGROUND CONDUITS.

CONSTRUCTION NOTES:

1. WELL 7BE0.1 REQUIRES A NEW WELL VAULT CONSTRUCTION, TRENCHING TO EXISTING PULL BOX 7BE AND INSTALLING (1) 2 1/2" SCH 80 CONDUIT, INSTRUMENTS AND INSTRUMENT CABLE.

DATE	BY	DESCRIPTION

REVISIONS

REGISTERED PROFESSIONAL ENGINEER — JASTEN KASSOFF — No. E 15809 — Exp. 12-31-16 — ELECTRICAL — STATE OF CALIFORNIA

PROJECT ENGINEER DATE

COUNTY OF LOS ANGELES DEPARTMENT OF PUBLIC WORKS

WEST COAST BASIN BARRIER PROJECT
TELEMETRY SYSTEM - PHASE II B
SEGMENT 4 PLAN
WELL 7BE0.1

PROJECT ID: FCC0001280 | PCA EF11715001 | DWG 176-D153.39 | SHEET: 39 OF 63

DRAFTER ALH | DESIGNER NH | CHECKER MK | CADD PART NUMBER | REVIEWED BY | DATE

FILE NAME: $FILEL$

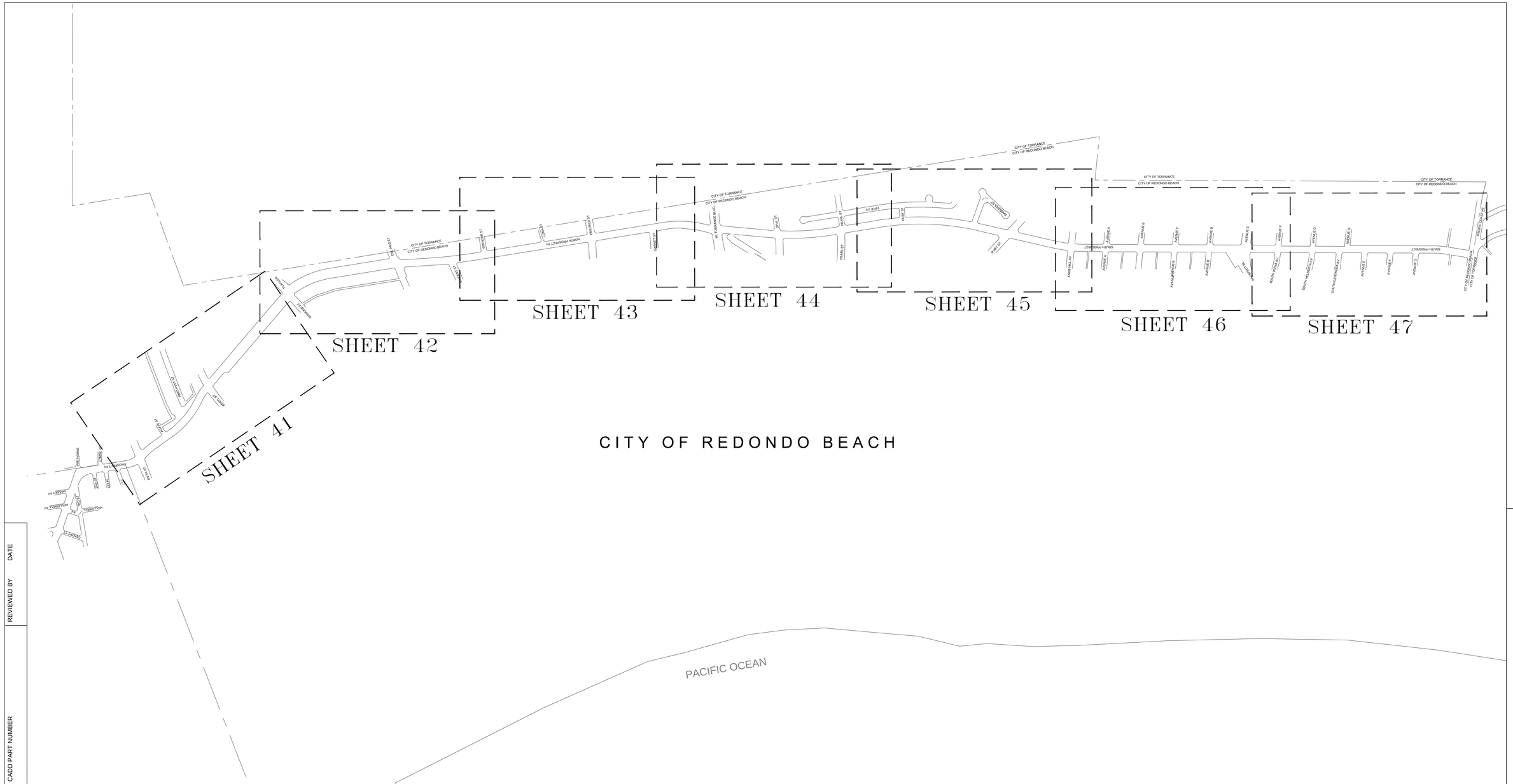
SHEET 41
SHEET 42
SHEET 43
SHEET 44
SHEET 45
SHEET 46
SHEET 47
CITY OF REDONDO BEACH
PACIFIC OCEAN
CITY OF TORRANCE
CITY OF REDONDO BEACH
NORTH PROSPECT AV
SOUTH PROSPECT
PROSPECT AV
PACIFIC COAST HY
CATALINA AV
PEARL ST
RUBY ST
N PEARL ST
AVENUE A
AVENUE B
AVENUE C
AVENUE D
AVENUE E
AVENUE F
AVENUE G
AVENUE H
SOUTH MEYNER AV
SOUTH MERIDIAN AV
SOUTH MERIDIAN AV
AVENUE E
AVENUE F
AVENUE G
CITY OF REDONDO BEACH
CITY OF TORRANCE
KOHN HILL AV
N CATALINA
N CLARK ST
N CLARK DR
N CLARK ST
N CLARK DR
N CLARK ST
N CLARK DR

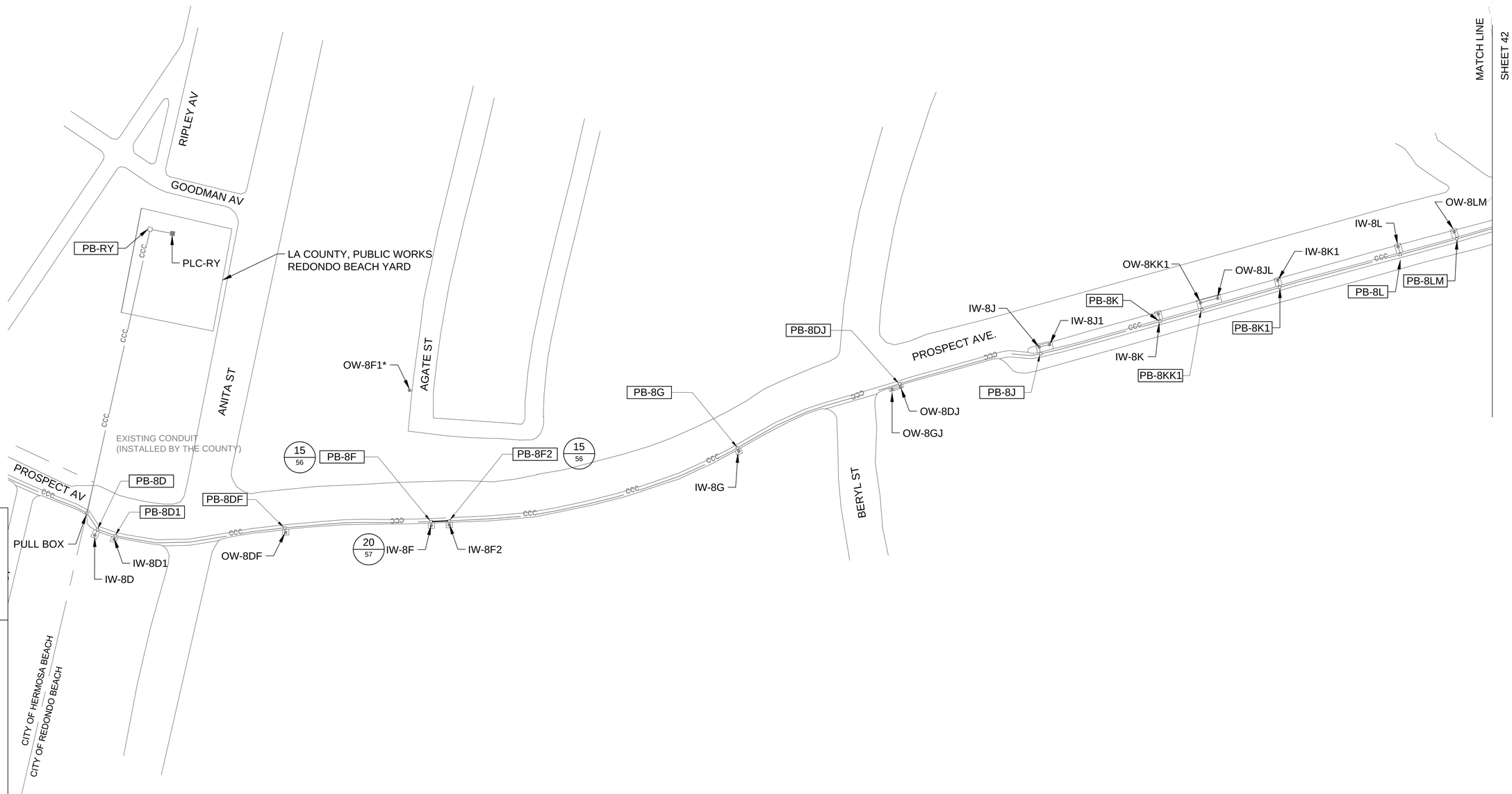

LEGEND

- E — ELECTRICAL METER
- ABOVE GROUND RIO CABINET
- PB (PULL BOX) (FLUSH WITH GROUND)
- OW (OBSERVATION WELL)
- IW (INJECTION WELL)
- —ccc— EXISTING CONTROL AND COMMUNICATION CONDUIT (CCC) (2-2" CONDUITS)

N

0 40' 80' 160'
SCALE: 1"=80'

TETRA TECH
www.tetratech.com
17885 Von Karman Avenue, Suite 500
Irvine, California 92614
Phone: 949-809-5000

* INDICATES OPTIONAL WELL UNDER WCBBP PHASE II "OPTIONAL FACILITIES"
** INDICATES OPTIONAL WELLS UNDER WCBBP PHASE IIB

GENERAL NOTES:

1. UNLESS NOTED OTHERWISE, ALL CONDUIT, PULL BOXES AND ABOVE-GRADE ENCLOSURES WERE INSTALLED DURING CONSTRUCTION OF PHASE I AND PHASE IB. CONTRACTOR SHALL PERFORM INSTALLATION OF ALL WIRING WITHIN EXISTING PULL BOX AND CONDUIT INSTALLATIONS AND WHERE APPROVED BY PUBLIC WORKS.
2. INSTALL NEW RIO ENCLOSURE AS NOTED ON PLANS, INSTALL BACK PANELS AND CONTROL COMPONENTS IN ENCLOSURES AS DEFINED ON THE PANEL ELEVATIONS AND SCHEMATICS. PROVIDE COMPLETE ENCLOSURE ASSEMBLIES WHERE NOTED.
3. CONTRACTOR SHALL BE RESPONSIBLE FOR REPAIRING ANY DAMAGE THAT IS CAUSED BY THE CONTRACTOR TO EXISTING UNDERGROUND UTILITIES, IRRIGATION SYSTEM AND LANDSCAPING.
4. SEE DETAILS ON SHEET 55 AND 56 FOR TYPICAL PULL BOX CONFIGURATION.
5. SEE DETAILS ON SHEETS 56, 57, 58, AND 59 FOR WELL CONFIGURATION.
6. PROVIDE TRENCHING, BACKFILL, AND PAVEMENT RESTORATION FOR ALL NEW UNDERGROUND CONDUITS.

DATE	BY	DESCRIPTION

REVISIONS

REGISTERED PROFESSIONAL ENGINEER
NEEEM KASSEM
No. E 15809
Exp. 12-31-16
ELECTRICAL
STATE OF CALIFORNIA

PROJECT ENGINEER DATE

COUNTY OF LOS ANGELES DEPARTMENT OF PUBLIC WORKS

WEST COAST BASIN BARRIER PROJECT
TELEMETRY SYSTEM - PHASE II B
SEGMENT 5 PLAN
WELL 8F

PROJECT ID: FCC0001280 | PCA EF11715001 | DWG 176-D153.41 | SHEET: 41 OF 63

DRAFTER ALH | DESIGNER NH | CHECKER MK | CADD PART NUMBER | REVIEWED BY | DATE

FILE NAME: $FILE$

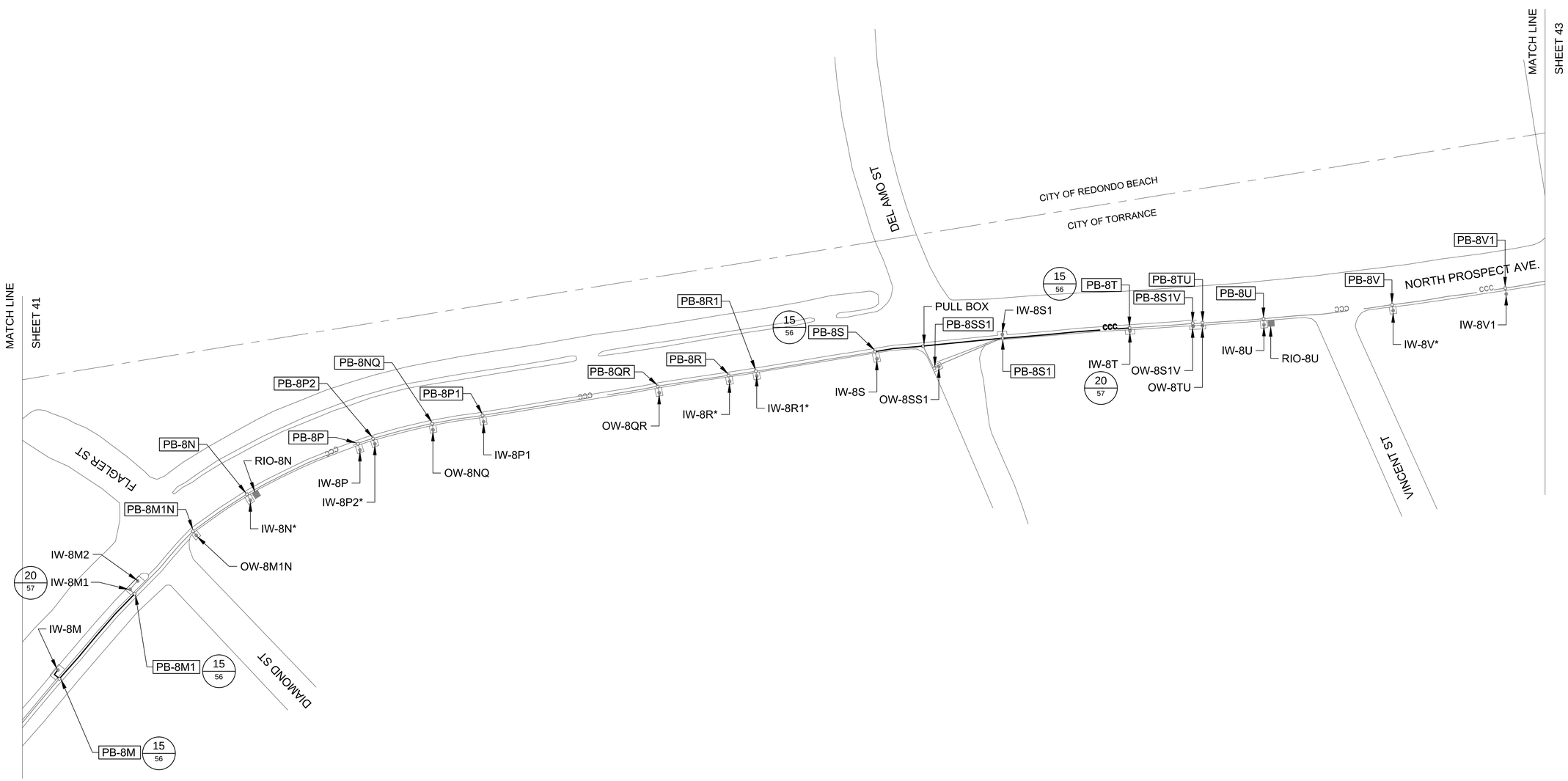

LEGEND

- ELECTRICAL METER
- ABOVE GROUND RIO CABINET
- PB (PULL BOX) (FLUSH WITH GROUND)
- OW (OBSERVATION WELL)
- IW (INJECTION WELL)
- EXISTING CONTROL AND COMMUNICATION CONDUIT (CCC) (2-2" CONDUITS)

N

0 40' 80' 160'
SCALE: 1"=80'

* INDICATES OPTIONAL WELL UNDER WCBBP PHASE II "OPTIONAL FACILITIES"
** INDICATES OPTIONAL WELLS UNDER WCBBP PHASE IIB

GENERAL NOTES:

1. UNLESS NOTED OTHERWISE, ALL CONDUIT, PULL BOXES AND ABOVE-GRADE ENCLOSURES WERE INSTALLED DURING CONSTRUCTION OF PHASE I AND PHASE IB. CONTRACTOR SHALL PERFORM INSTALLATION OF ALL WIRING WITHIN EXISTING PULL BOX AND CONDUIT INSTALLATIONS AND WHERE APPROVED BY PUBLIC WORKS.
2. INSTALL NEW RIO ENCLOSURE AS NOTED ON PLANS, INSTALL BACK PANELS AND CONTROL COMPONENTS IN ENCLOSURES AS DEFINED ON THE PANEL ELEVATIONS AND SCHEMATICS. PROVIDE COMPLETE ENCLOSURE ASSEMBLIES WHERE NOTED.
3. CONTRACTOR SHALL BE RESPONSIBLE FOR REPAIRING ANY DAMAGE THAT IS CAUSED BY THE CONTRACTOR TO EXISTING UNDERGROUND UTILITIES, IRRIGATION SYSTEM AND LANDSCAPING.
4. SEE DETAILS ON SHEET 55 AND 56 FOR TYPICAL PULL BOX CONFIGURATION.
5. SEE DETAILS ON SHEETS 56, 57, 58, AND 59 FOR WELL CONFIGURATION.
6. PROVIDE TRENCHING, BACKFILL, AND PAVEMENT RESTORATION FOR ALL NEW UNDERGROUND CONDUITS.

TETRA TECH
www.tetratech.com
17885 Von Karman Avenue, Suite 500
Irvine, California 92614
Phone: 949-809-5000

DATE	BY	DESCRIPTION

REVISIONS

REGISTERED PROFESSIONAL ENGINEER
MARLEN KRASSER
No. E 15809
Exp. 12-31-16
ELECTRICAL
STATE OF CALIFORNIA

PROJECT ENGINEER DATE

COUNTY OF LOS ANGELES DEPARTMENT OF PUBLIC WORKS

WEST COAST BASIN BARRIER PROJECT
TELEMETRY SYSTEM - PHASE II B
SEGMENT 5 PLAN
WELL 8M1 AND 8T

PROJECT ID: FCC0001280 | PCA EF11715001 | DWG 176-D153.42 | SHEET: 42 OF 63

DRAFTER ALH | DESIGNER NH | CHECKER MK | CADD PART NUMBER | REVIEWED BY | DATE

FILE NAME: $FILE$

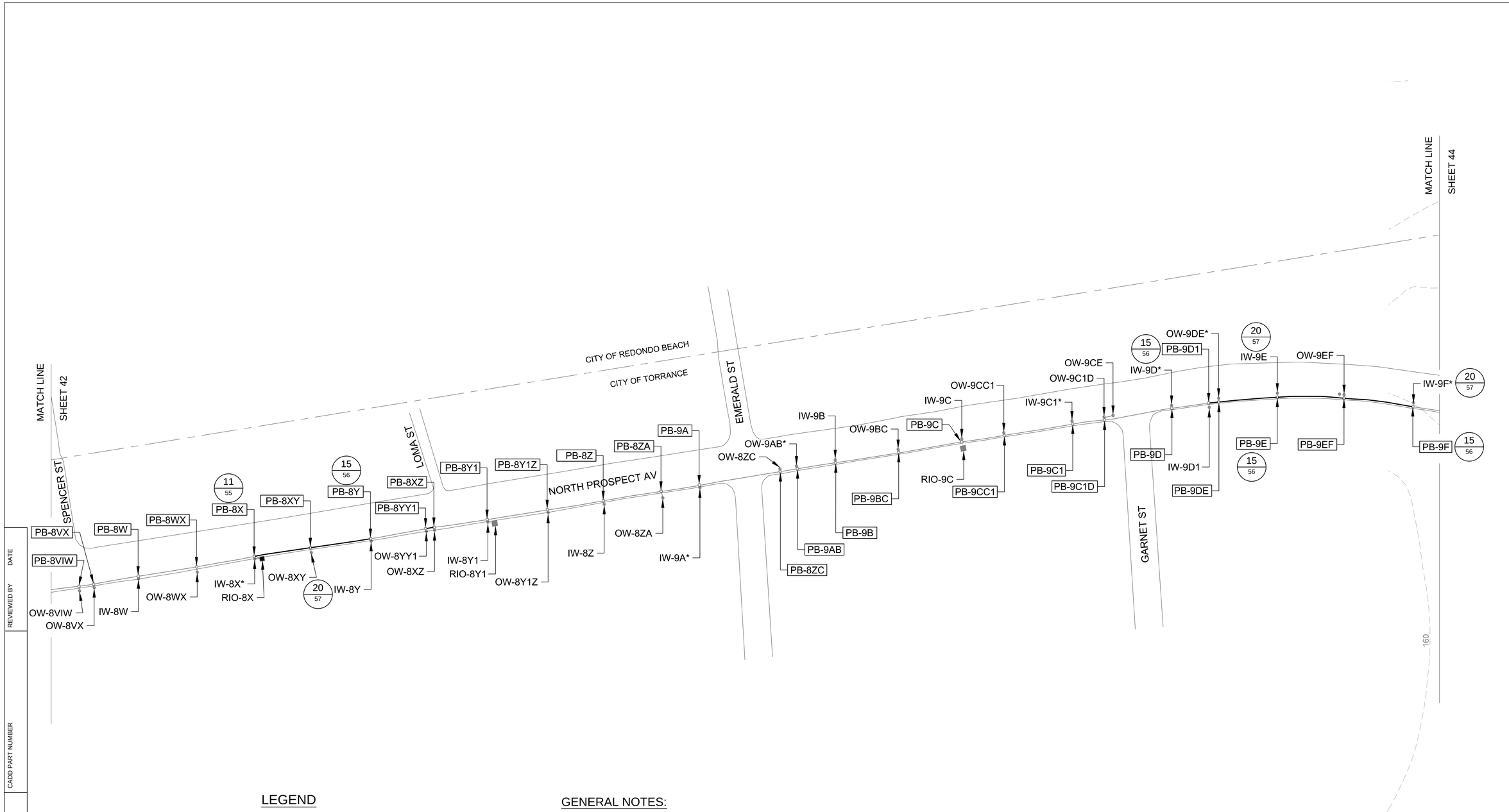

LEGEND

- E — ELECTRICAL METER
- ABOVE GROUND RIO CABINET
- PB (PULL BOX) (FLUSH WITH GROUND)
- OW (OBSERVATION WELL)
- IW (INJECTION WELL)
- —CCC— EXISTING CONTROL AND COMMUNICATION CONDUIT (CCC) (2-2" CONDUITS)

N

0 40' 80' 160'
SCALE: 1"=80'

* INDICATES OPTIONAL WELL UNDER WCBBP PHASE II "OPTIONAL FACILITIES"
** INDICATES OPTIONAL WELLS UNDER WCBBP PHASE IIB

GENERAL NOTES:

1. UNLESS NOTED OTHERWISE, ALL CONDUIT, PULL BOXES AND ABOVE-GRADE ENCLOSURES WERE INSTALLED DURING CONSTRUCTION OF PHASE I AND PHASE IB. CONTRACTOR SHALL PERFORM INSTALLATION OF ALL WIRING WITHIN EXISTING PULL BOX AND CONDUIT INSTALLATIONS AND WHERE APPROVED BY PUBLIC WORKS.
2. INSTALL NEW RIO ENCLOSURE AS NOTED ON PLANS, INSTALL BACK PANELS AND CONTROL COMPONENTS IN ENCLOSURES AS DEFINED ON THE PANEL ELEVATIONS AND SCHEMATICS. PROVIDE COMPLETE ENCLOSURE ASSEMBLIES WHERE NOTED.
3. CONTRACTOR SHALL BE RESPONSIBLE FOR REPAIRING ANY DAMAGE THAT IS CAUSED BY THE CONTRACTOR TO EXISTING UNDERGROUND UTILITIES, IRRIGATION SYSTEM AND LANDSCAPING.
4. SEE DETAILS ON SHEET 55 AND 56 FOR TYPICAL PULL BOX CONFIGURATION.
5. SEE DETAILS ON SHEETS 56, 57, 58, AND 59 FOR WELL CONFIGURATION.
6. PROVIDE TRENCHING, BACKFILL, AND PAVEMENT RESTORATION FOR ALL NEW UNDERGROUND CONDUITS.

TETRA TECH
www.tetratech.com
17885 Von Karman Avenue, Suite 500
Irvine, California 92614
Phone: 949-809-5000

DATE	BY	DESCRIPTION

REVISIONS

REGISTERED PROFESSIONAL ENGINEER — NAZEEN KARSAN — No. E 15809 — Exp. 12-31-16 — ELECTRICAL — STATE OF CALIFORNIA

PROJECT ENGINEER DATE

COUNTY OF LOS ANGELES DEPARTMENT OF PUBLIC WORKS

WEST COAST BASIN BARRIER PROJECT
TELEMETRY SYSTEM - PHASE II B
SEGMENT 5 PLAN
WELL 8Y, 9E AND 9F

PROJECT ID: FCC0001280 | PCA EF11715001 | DWG 176-D153.43 | SHEET: 43 OF 63

DRAFTER ALH | DESIGNER NH | CHECKER MK | CADD PART NUMBER | REVIEWED BY | DATE

FILE NAME: $FILEL$

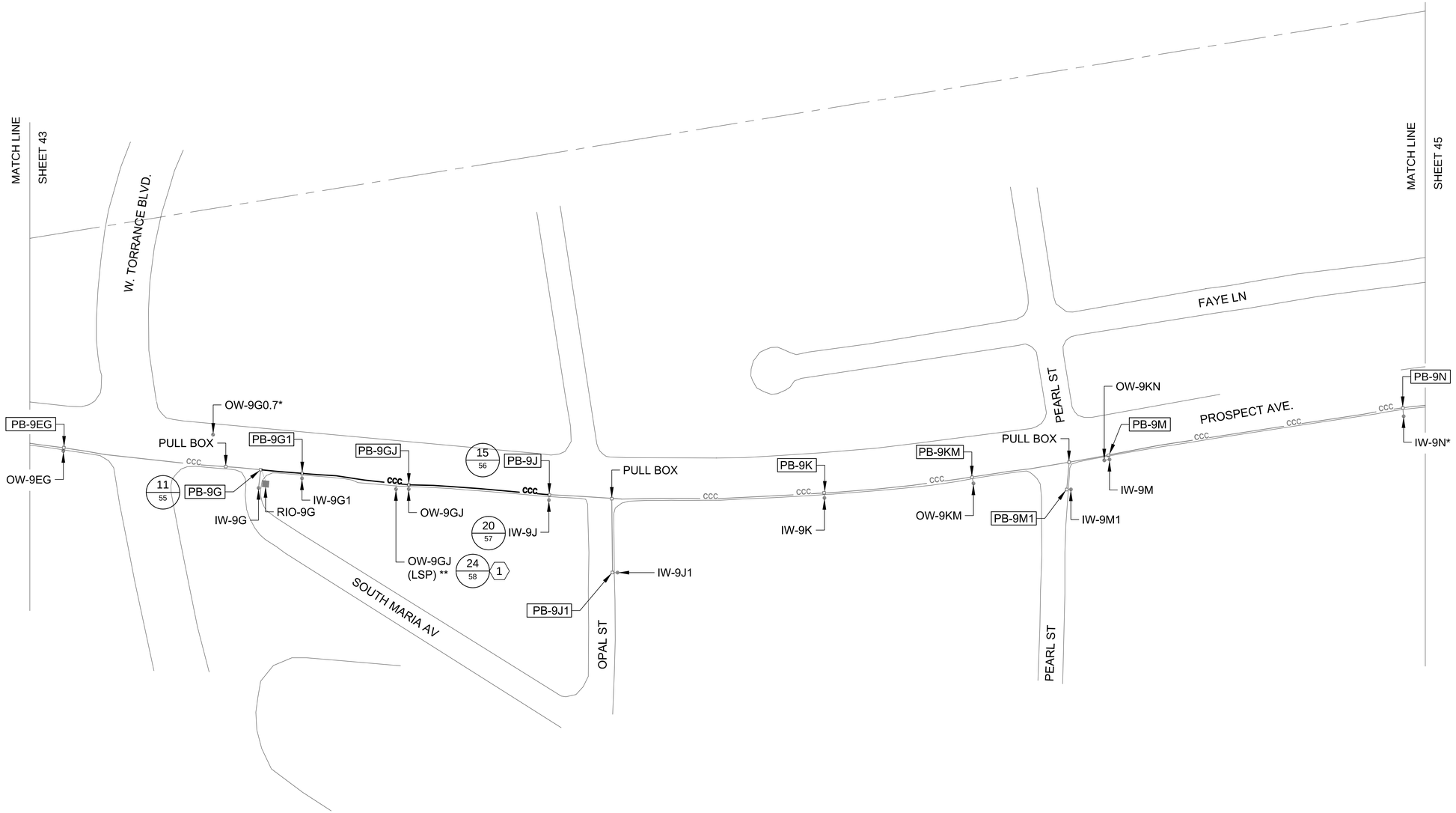

LEGEND

- ELECTRICAL METER
- ABOVE GROUND RIO CABINET
- PB (PULL BOX) (FLUSH WITH GROUND)
- OW (OBSERVATION WELL)
- IW (INJECTION WELL)
- ccc EXISTING CONTROL AND COMMUNICATION CONDUIT (CCC) (2-2" CONDUITS)

N

0 40' 80' 160'
SCALE: 1"=80'

TETRA TECH
www.tetratech.com
17885 Von Karman Avenue, Suite 500
Irvine, California 92614
Phone: 949-809-5000

* INDICATES OPTIONAL WELL UNDER WCBBP PHASE II "OPTIONAL FACILITIES"
** INDICATES OPTIONAL WELLS UNDER WCBBP PHASE IIB

GENERAL NOTES:

1. UNLESS NOTED OTHERWISE, ALL CONDUIT, PULL BOXES AND ABOVE-GRADE ENCLOSURES WERE INSTALLED DURING CONSTRUCTION OF PHASE I AND PHASE IB. CONTRACTOR SHALL PERFORM INSTALLATION OF ALL WIRING WITHIN EXISTING PULL BOX AND CONDUIT INSTALLATIONS AND WHERE APPROVED BY PUBLIC WORKS.
2. INSTALL NEW RIO ENCLOSURE AS NOTED ON PLANS, INSTALL BACK PANELS AND CONTROL COMPONENTS IN ENCLOSURES AS DEFINED ON THE PANEL ELEVATIONS AND SCHEMATICS. PROVIDE COMPLETE ENCLOSURE ASSEMBLIES WHERE NOTED.
3. CONTRACTOR SHALL BE RESPONSIBLE FOR REPAIRING ANY DAMAGE THAT IS CAUSED BY THE CONTRACTOR TO EXISTING UNDERGROUND UTILITIES, IRRIGATION SYSTEM AND LANDSCAPING.
4. SEE DETAILS ON SHEET 55 AND 56 FOR TYPICAL PULL BOX CONFIGURATION.
5. SEE DETAILS ON SHEETS 56, 57, 58, AND 59 FOR WELL CONFIGURATION.
6. PROVIDE TRENCHING, BACKFILL, AND PAVEMENT RESTORATION FOR ALL NEW UNDERGROUND CONDUITS.

CONSTRUCTION NOTES:

1 INDICATES WELLS THAT WILL BE CONSTRUCTED UNDER A SEPARATE PROJECT

DATE	BY	DESCRIPTION

REVISIONS

REGISTERED PROFESSIONAL ENGINEER
MATTHEW A. CLASSEN
No. E 15809
Exp. 12-31-16
ELECTRICAL
STATE OF CALIFORNIA

PROJECT ENGINEER DATE

COUNTY OF LOS ANGELES DEPARTMENT OF PUBLIC WORKS

WEST COAST BASIN BARRIER PROJECT
TELEMETRY SYSTEM - PHASE II B
SEGMENT 5 PLAN
WELL 9J AND 9GJ

PROJECT ID: FCC0001280 | PCA EF11715001 | DWG 176-D153.44 | SHEET: 44 OF 63

DRAFTER ALH | DESIGNER NH | CHECKER MK | CADD PART NUMBER | REVIEWED BY | DATE

FILE NAME: $FILEL$

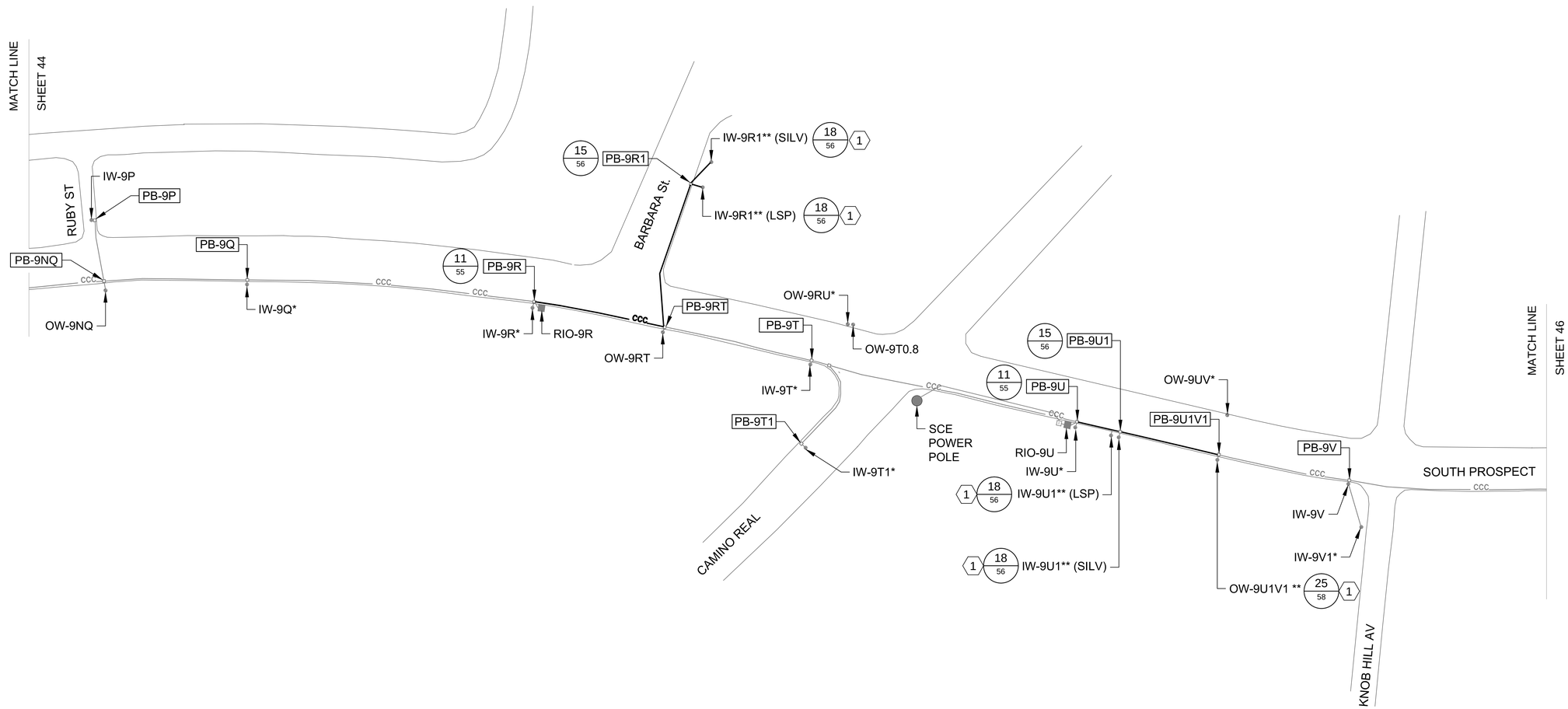

LEGEND

- E — ELECTRICAL METER
- ABOVE GROUND RIO CABINET
- PB (PULL BOX) (FLUSH WITH GROUND)
- OW (OBSERVATION WELL)
- IW (INJECTION WELL)
- CCC — EXISTING CONTROL AND COMMUNICATION CONDUIT (CCC) (2-2" CONDUITS)

N

0 40' 80' 160'
SCALE: 1"=80'

* INDICATES OPTIONAL WELL UNDER WCBBP PHASE II "OPTIONAL FACILITIES"
** INDICATES OPTIONAL WELLS UNDER WCBBP PHASE IIB

GENERAL NOTES:

1. UNLESS NOTED OTHERWISE, ALL CONDUIT, PULL BOXES AND ABOVE-GRADE ENCLOSURES WERE INSTALLED DURING CONSTRUCTION OF PHASE I AND PHASE IB. CONTRACTOR SHALL PERFORM INSTALLATION OF ALL WIRING WITHIN EXISTING PULL BOX AND CONDUIT INSTALLATIONS AND WHERE APPROVED BY PUBLIC WORKS.
2. INSTALL NEW RIO ENCLOSURE AS NOTED ON PLANS, INSTALL BACK PANELS AND CONTROL COMPONENTS IN ENCLOSURES AS DEFINED ON THE PANEL ELEVATIONS AND SCHEMATICS. PROVIDE COMPLETE ENCLOSURE ASSEMBLIES WHERE NOTED.
3. CONTRACTOR SHALL BE RESPONSIBLE FOR REPAIRING ANY DAMAGE THAT IS CAUSED BY THE CONTRACTOR TO EXISTING UNDERGROUND UTILITIES, IRRIGATION SYSTEM AND LANDSCAPING.
4. SEE DETAILS ON SHEET 55 AND 56 FOR TYPICAL PULL BOX CONFIGURATION.
5. SEE DETAILS ON SHEETS 56, 57, 58, AND 59 FOR WELL CONFIGURATION.
6. PROVIDE TRENCHING, BACKFILL, AND PAVEMENT RESTORATION FOR ALL NEW UNDERGROUND CONDUITS.

CONSTRUCTION NOTES:

1 — INDICATES WELLS THAT WILL BE CONSTRUCTED UNDER A SEPARATE PROJECT

TETRA TECH
www.tetratech.com
17885 Von Karman Avenue, Suite 500
Irvine, California 92614
Phone: 949-809-5000

DATE	BY	DESCRIPTION

REVISIONS

REGISTERED PROFESSIONAL ENGINEER — NAZEEM KASSAM — No. E 15809 — Exp. 12-31-16 — ELECTRICAL — STATE OF CALIFORNIA

PROJECT ENGINEER DATE

COUNTY OF LOS ANGELES DEPARTMENT OF PUBLIC WORKS

WEST COAST BASIN BARRIER PROJECT
TELEMETRY SYSTEM - PHASE II B
SEGMENT 5 PLAN WELL
9R1, 9U1 AND 9U1V1

PROJECT ID: FCC0001280 | PCA EF11715001 | DWG 176-D153.45 | SHEET: 45 OF 63

DRAFTER ALH | DESIGNER NH | CHECKER MK | CADD PART NUMBER | REVIEWED BY | DATE

FILE NAME: $FILEL$

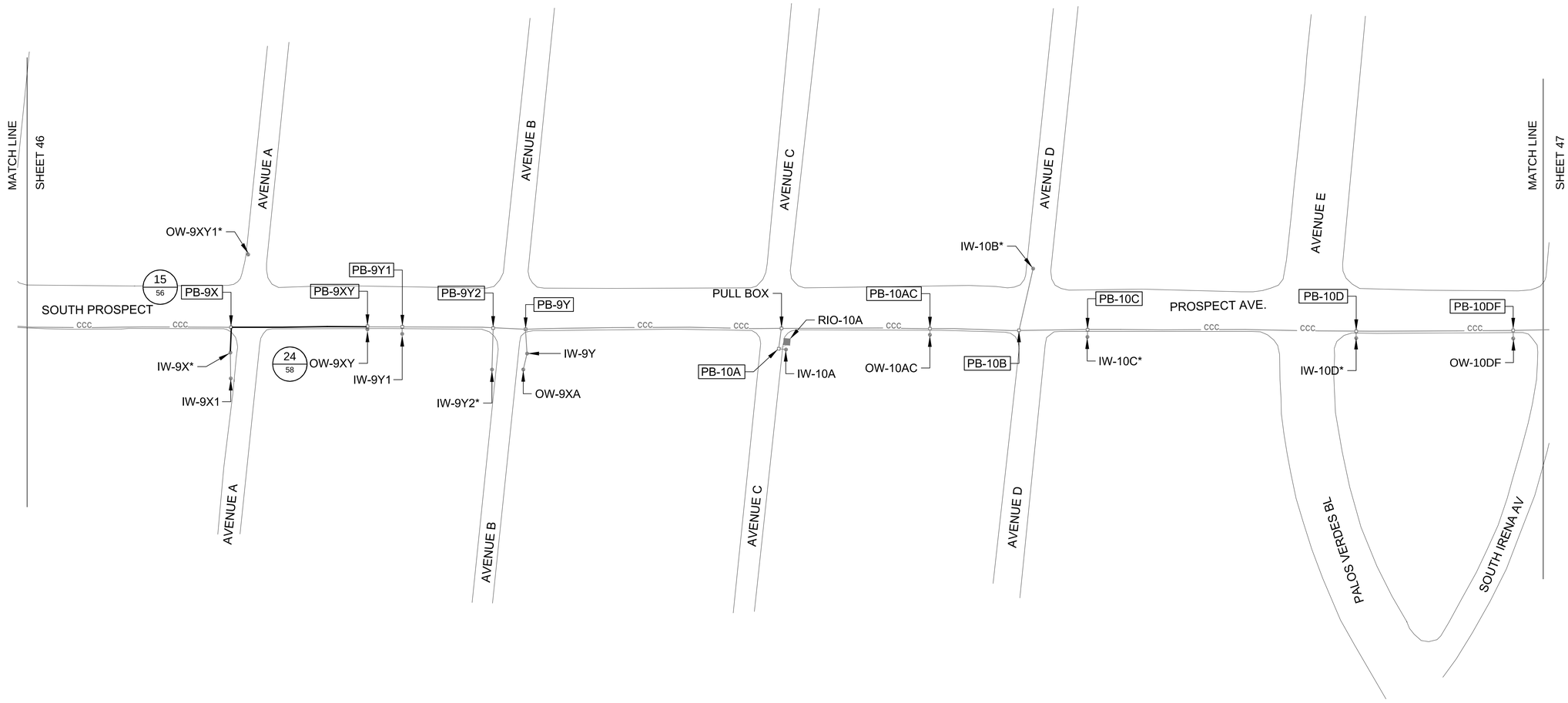

LEGEND

- E — ELECTRICAL METER
- ABOVE GROUND RIO CABINET
- PB (PULL BOX) (FLUSH WITH GROUND)
- OW (OBSERVATION WELL)
- IW (INJECTION WELL)
- ccc — EXISTING CONTROL AND COMMUNICATION CONDUIT (CCC) (2-2" CONDUITS)

N

0 40' 80' 160'

SCALE: 1"=80'

* INDICATES OPTIONAL WELL UNDER WCBBP PHASE II "OPTIONAL FACILITIES"

** INDICATES OPTIONAL WELLS UNDER WCBBP PHASE IIB

GENERAL NOTES:

1. UNLESS NOTED OTHERWISE, ALL CONDUIT, PULL BOXES AND ABOVE-GRADE ENCLOSURES WERE INSTALLED DURING CONSTRUCTION OF PHASE I AND PHASE IB. CONTRACTOR SHALL PERFORM INSTALLATION OF ALL WIRING WITHIN EXISTING PULL BOX AND CONDUIT INSTALLATIONS AND WHERE APPROVED BY PUBLIC WORKS.
2. INSTALL NEW RIO ENCLOSURE AS NOTED ON PLANS, INSTALL BACK PANELS AND CONTROL COMPONENTS IN ENCLOSURES AS DEFINED ON THE PANEL ELEVATIONS AND SCHEMATICS. PROVIDE COMPLETE ENCLOSURE ASSEMBLIES WHERE NOTED.
3. CONTRACTOR SHALL BE RESPONSIBLE FOR REPAIRING ANY DAMAGE THAT IS CAUSED BY THE CONTRACTOR TO EXISTING UNDERGROUND UTILITIES, IRRIGATION SYSTEM AND LANDSCAPING.
4. SEE DETAILS ON SHEET 55 AND 56 FOR TYPICAL PULL BOX CONFIGURATION.
5. SEE DETAILS ON SHEETS 56, 57, 58, AND 59 FOR WELL CONFIGURATION.
6. PROVIDE TRENCHING, BACKFILL, AND PAVEMENT RESTORATION FOR ALL NEW UNDERGROUND CONDUITS.

TETRA TECH
www.tetratech.com
17885 Von Karman Avenue, Suite 500
Irvine, California 92614
Phone: 949-809-5000

DATE	BY	DESCRIPTION

REVISIONS

REGISTERED PROFESSIONAL ENGINEER — JAZEEN KASSAB — No. E 15809 Exp. 12-31-16 — ELECTRICAL — STATE OF CALIFORNIA

PROJECT ENGINEER DATE

COUNTY OF LOS ANGELES DEPARTMENT OF PUBLIC WORKS

WEST COAST BASIN BARRIER PROJECT
TELEMETRY SYSTEM - PHASE II B
SEGMENT 5 PLAN
WELL 9XY

PROJECT ID: FCC0001280 | PCA EF11715001 | DWG 176-D153.46 | SHEET: 46 OF 63

DRAFTER ALH | DESIGNER NH | CHECKER MK | CADD PART NUMBER | REVIEWED BY | DATE

FILE NAME: $FILEL$

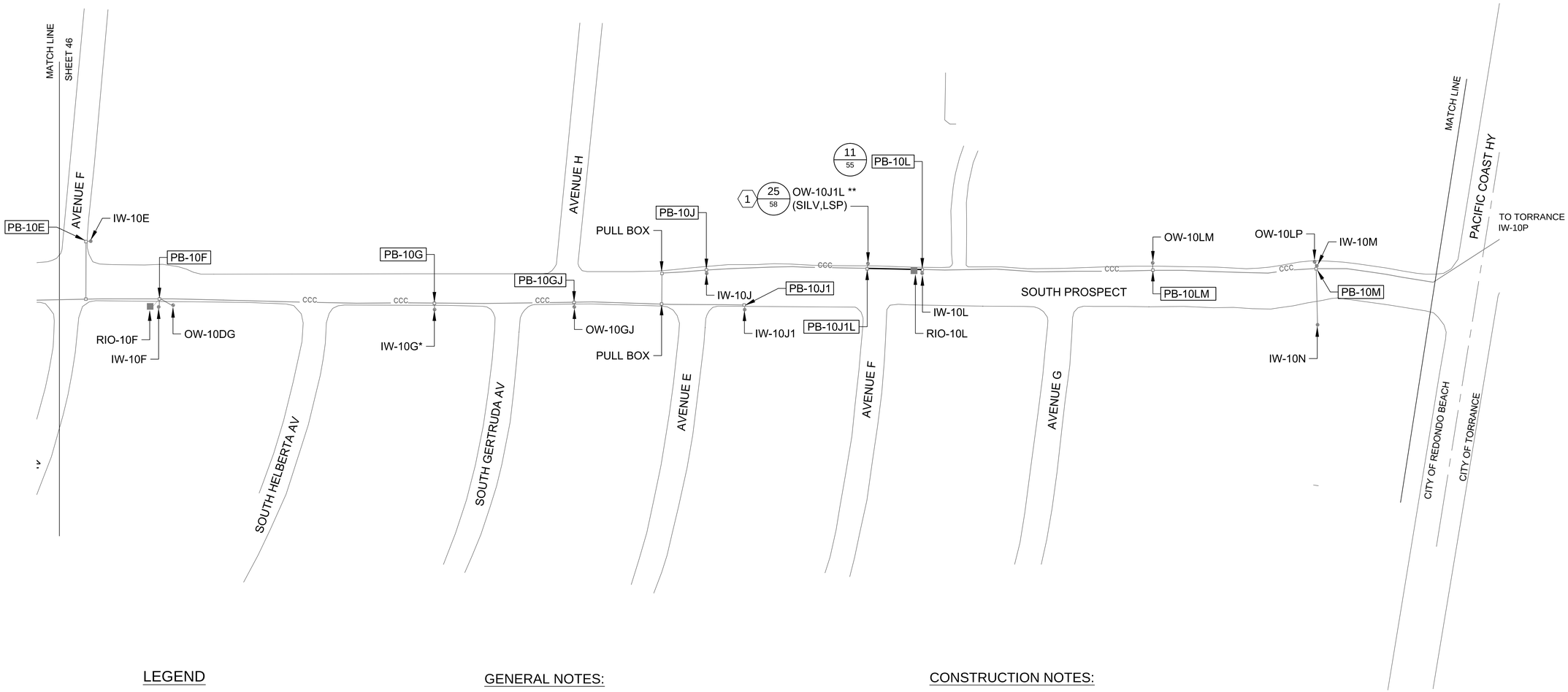

LEGEND

- E — ELECTRICAL METER
- ABOVE GROUND RIO CABINET
- PB (PULL BOX) (FLUSH WITH GROUND)
- OW (OBSERVATION WELL)
- IW (INJECTION WELL)
- CCC — EXISTING CONTROL AND COMMUNICATION CONDUIT (CCC) (2-2" CONDUITS)

N

0 40' 80' 160'

SCALE: 1"=80'

* INDICATES OPTIONAL WELL UNDER WCBBP PHASE II "OPTIONAL FACILITIES"

** INDICATES OPTIONAL WELLS UNDER WCBBP PHASE IIB

GENERAL NOTES:

1. UNLESS NOTED OTHERWISE, ALL CONDUIT, PULL BOXES AND ABOVE-GRADE ENCLOSURES WERE INSTALLED DURING CONSTRUCTION OF PHASE I AND PHASE IB. CONTRACTOR SHALL PERFORM INSTALLATION OF ALL WIRING WITHIN EXISTING PULL BOX AND CONDUIT INSTALLATIONS AND WHERE APPROVED BY PUBLIC WORKS.
2. INSTALL NEW RIO ENCLOSURE AS NOTED ON PLANS, INSTALL BACK PANELS AND CONTROL COMPONENTS IN ENCLOSURES AS DEFINED ON THE PANEL ELEVATIONS AND SCHEMATICS. PROVIDE COMPLETE ENCLOSURE ASSEMBLIES WHERE NOTED.
3. CONTRACTOR SHALL BE RESPONSIBLE FOR REPAIRING ANY DAMAGE THAT IS CAUSED BY THE CONTRACTOR TO EXISTING UNDERGROUND UTILITIES, IRRIGATION SYSTEM AND LANDSCAPING.
4. SEE DETAILS ON SHEET 55 AND 56 FOR TYPICAL PULL BOX CONFIGURATION.
5. SEE DETAILS ON SHEETS 56, 57, 58, AND 59 FOR WELL CONFIGURATION.
6. PROVIDE TRENCHING, BACKFILL, AND PAVEMENT RESTORATION FOR ALL NEW UNDERGROUND CONDUITS.

CONSTRUCTION NOTES:

1. INDICATES WELLS THAT WILL BE CONSTRUCTED UNDER A SEPARATE PROJECT

DATE	BY	DESCRIPTION

REVISIONS

REGISTERED PROFESSIONAL ENGINEER — MAZEN KASSEM — No. E 15809 — Exp. 12-31-16 — ELECTRICAL — STATE OF CALIFORNIA

PROJECT ENGINEER DATE

COUNTY OF LOS ANGELES DEPARTMENT OF PUBLIC WORKS

WEST COAST BASIN BARRIER PROJECT
TELEMETRY SYSTEM - PHASE II B
SEGMENT 5 PLAN
WELL 10J1L

PROJECT ID: FCC0001280 | PCA EF11715001 | DWG 176-D153.47 | SHEET: 47 OF 63

TETRA TECH
www.tetratech.com
17885 Von Karman Avenue, Suite 500
Irvine, California 92614
Phone: 949-809-5000

DRAFTER ALH | DESIGNER NH | CHECKER MK | CADD PART NUMBER | REVIEWED BY | DATE

FILE NAME: $FILELS

CONDUIT AND WIRE SCHEDULE

NUMBER	SIZE	WIRE	FROM	TO	NOTES
P-100	2"	2#6, #6G	METER PANEL 4T	PB-4R	EXISTING CONDUIT
P-101					NOT IN USE
P-102	2"	4#6, #6G	PB-4R	RIO-4R	EXISTING CONDUIT
P-103	2"	2#6, #6G	PB-4R	PB-4K	EXISTING CONDUIT
P-104	2"	4#6, #6G	PB-4K	RIO-4K	EXISTING CONDUIT
P-105	2"	2#6, #6G	PB-4K	PB-4CRIO	EXISTING CONDUIT
P-107	2"	4#6, #6G	PB-4CRIO	RIO-4C	EXISTING CONDUIT
P-108	2"	2#6, #6G	PB-4CRIO	RIO-3Z	EXISTING CONDUIT

RIO POWER FEEDER VOLTAGE DROP CALCULATIONS

SEGMENT	CIRCUIT	RIO PANEL	PANEL LOAD (VA)	TOTAL DOWNSTREAM LOAD (VA)	TOTAL LOAD (VA)	CURRENT AT 240 VAC (A)	DISTANCE FROM SERVICE (ft)	PHASE CONDUCTOR SIZE	VOLTAGE DROP (V)	VOLTAGE DROP (%)
1	1	RIO-4R	112	336	448	1.9	750	6	1.3	0.54
1	1	RIO-4K	112	224	336	1.4	2270	6	3.2	1.33
1	1	RIO-4C	112	112	224	0.9	4424	6	4.9	2.04
1	1	RIO-3Z	112	0	112	0.5	5414	6	5.3	2.21

PANEL A1 — PANEL SCHEDULE

PROJECT: WEST COAST BASIN BARRIER

120/240V, 1Ph, 3W. 100A BUS M.L.O. SURFACE NEMA 3R 19-Oct-15

CKT NO	DESCRIPTION/ LOCATION	LOAD (VA)	LOAD TYPE	CB AMP	CB POLE	PHASE	CB AMP	CB POLE	LOAD (VA)	LOAD TYPE	DESCRIPTION/ LOCATION	CKT NO
1	SERVICE DISCONNECT			100	2	a	20	2	360		(E)CONV OUTLET	2
3						b	20	2	360			4
5	(E)AG RIOs 4W, 5E, 5R & 6B	400		15	2	a					SPACE	6
7		400				b						8
9	AG RIOs 4R, 4K, 4C & 3Z	400		15	2	a					SPACE	10
11		400				b						12
13	SPARE			15	2	a					SPACE	14
15						b						16
17	SPARE			15	2	a					SPACE	18
19						b						20
21	SPARE			15	2	a					SPACE	22
23						b						24
25	SPARE			15	2	a					SPACE	26
27						b						28

TOT CONN LOAD:	Ph A	1,160 VA	10 A		
TOT CONN LOAD:	Ph B	1,160 VA	10 A		
TOT CONN LOAD:		0 VA	0 A		
"MAX" PHASE CONN LOAD:	Ph A	1,160 VA			
TOTAL CONNECTED LOAD:		2.3 KVA	9.7 AMPS	TOTAL DEMAND LOAD:	0.0 KVA 0.0 AMPS

REVIEWED BY	DATE

CADD PART NUMBER	CHECKER	DESIGNER	DRAFTER
	MK	NH	ALH

TETRA TECH
www.tetratech.com
17885 Von Karman Avenue, Suite 500
Irvine, California 92614
Phone: 949-809-5000

DATE	BY	DESCRIPTION

REVISIONS

REGISTERED PROFESSIONAL ENGINEER — NAEEM KASSAB — No. E 15809 Exp. 12-31-16 — ELECTRICAL — STATE OF CALIFORNIA

PROJECT ENGINEER DATE

COUNTY OF LOS ANGELES DEPARTMENT OF PUBLIC WORKS

WEST COAST BASIN BARRIER PROJECT
TELEMETRY SYSTEM - PHASE II B

CONDUIT SCHEDULE AND
PANEL SCHEDULE

PROJECT ID: FCC0001280 | PCA EF11715001 | DWG 176-D153.48 | SHEET: 48 OF 63

FILE NAME: $FILEL$

WEST COAST BASIN BARRIER PROJECT PHASE IIB INSTRUMENT SCHEDULE

SEGMENT	CITY	CABINET	WELL NAME	SITE TYPE	WELL TYPE	FCD	AQUIFER	INSTRUMENT TAG NAME	DESCRIPTION	INSTRUMENT TYPE	SIGNAL TYPE	SUPPLY VOLTAGE	ENGINEERING UNIT RANGE	REF POINT ELEV (ft)	SENSOR DEPTH (ft)	CABLE LENGTH (ft)
1	EL SEGUNDO	RIO-4R							Remote I/O 4R AC Power Fail	Relay	DI: Dry Contact	120 VAC				
			4P	Injection	Dual			4P_WVLS	Injection Well 4P Vault Flooded	Level Switch	DI: Dry Contact	24 VDC				
						1307X	200FT	4P_WWL1	Injection Well 4P Level 1	Pressure Transmitter	AI: 4-20 mA	9-30 VDC	0-150 psia	109.8	130	145
								4P_WHP1	Injection Well 4P Head Pressure 1	Pressure Transmitter	AI: 4-20 mA	9-30 VDC	0-50 psia			
								4P_WWF1	Injection Well 4P Flow 1	Differential Pressure Transmitter	AI: 4-20 mA	9-30 VDC	0-5 psid			
						1307AF	SIL	4P_WWL2	Injection Well 4P Level 2	Pressure Transmitter	AI: 4-20 mA	9-30 VDC	0-150 psia	109.8	130	145
								4P_WHP2	Injection Well 4P Head Pressure 2	Pressure Transmitter	AI: 4-20 mA	9-30 VDC	0-50 psia			
								4P_WWF2	Injection Well 4P Flow 2	Differential Pressure Transmitter	AI: 4-20 mA	9-30 VDC	0-5 psid			
								4P_WPP	Injection Well 4P Packer Pressure	Pressure Transmitter	AI: 4-20 mA	9-30 VDC	0-350 psia			
			4PR	Observation	Multiple	1308U	200-SIL	4PR_WWL1	Observation Well 4PR Level 1	Pressure Transmitter	AI: 4-20 mA	9-30 VDC	0-30 psia	109.8	130	145
						1308V	200-SIL	4PR_WWL2	Observation Well 4PR Level 2	Pressure Transmitter	AI: 4-20 mA	9-30 VDC	0-30 psia	109.8	130	145
			4R	Injection	Dual			4R_WVLS	Injection Well 4R Vault Flooded	Level Switch	DI: Dry Contact	24 VDC				
						1308AB	200FT	4R_WWL1	Injection Well 4R Level 1	Pressure Transmitter	AI: 4-20 mA	9-30 VDC	0-150 psia	109.8	130	145
								4R_WHP1	Injection Well 4R Head Pressure 1	Pressure Transmitter	AI: 4-20 mA	9-30 VDC	0-50 psia			
								4R_WWF1	Injection Well 4R Flow 1	Differential Pressure Transmitter	AI: 4-20 mA	9-30 VDC	0-5 psid			
						1308AF	SIL	4R_WWL2	Injection Well 4R Level 2	Pressure Transmitter	AI: 4-20 mA	9-30 VDC	0-150 psia	109.8	130	145
								4R_WHP2	Injection Well 4R Head Pressure 2	Pressure Transmitter	AI: 4-20 mA	9-30 VDC	0-50 psia			
								4R_WWF2	Injection Well 4R Flow 2	Differential Pressure Transmitter	AI: 4-20 mA	9-30 VDC	0-5 psid			
								4R_WPP	Injection Well 4R Packer Pressure	Pressure Transmitter	AI: 4-20 mA	9-30 VDC	0-350 psia			
1	EL SEGUNDO	RIO-4K							Remote I/O 4M AC Power Fail	Relay	DI: Dry Contact	120 VAC				
			4K	Injection	Dual			4K_WVLS	Injection Well 4K Vault Flooded	Level Switch	DI: Dry Contact	24 VDC				
						1307V	200FT	4K_WWL1	Injection Well 4K Level 1	Pressure Transmitter	AI: 4-20 mA	9-30 VDC	0-150 psia	115.5	130	145
								4K_WHP1	Injection Well 4K Head Pressure 1	Pressure Transmitter	AI: 4-20 mA	9-30 VDC	0-50 psia			
								4K_WWF1	Injection Well 4K Flow 1	Differential Pressure Transmitter	AI: 4-20 mA	9-30 VDC	0-5 psid			
						1307AD	SIL	4K_WWL2	Injection Well 4K Level 2	Pressure Transmitter	AI: 4-20 mA	9-30 VDC	0-150 psia	115.5	130	145
								4K_WHP2	Injection Well 4K Head Pressure 2	Pressure Transmitter	AI: 4-20 mA	9-30 VDC	0-50 psia			
								4K_WWF2	Injection Well 4K Flow 2	Differential Pressure Transmitter	AI: 4-20 mA	9-30 VDC	0-5 psid			
								4K_WPP	Injection Well 4K Packer Pressure	Pressure Transmitter	AI: 4-20 mA	9-30 VDC	0-350 psia			
			4KM	Observation	Multiple	1307M	200FT	4KM_WWL1	Observation Well 4KM Level 1	Pressure Transmitter	AI: 4-20 mA	9-30 VDC	0-30 psia	114.5	130	145
						1307L	SIL	4KM_WWL2	Observation Well 4KM Level 2	Pressure Transmitter	AI: 4-20 mA	9-30 VDC	0-30 psia	114.5	130	145
			4M	Injection	Dual			4M_WVLS	Injection Well 4M Vault Flooded	Level Switch	DI: Dry Contact	24 VDC				
						1307W	200FT	4M_WWL1	Injection Well 4M Level 1	Pressure Transmitter	AI: 4-20 mA	9-30 VDC	0-150 psia	109.8	130	145
								4M_WHP1	Injection Well 4M Head Pressure 1	Pressure Transmitter	AI: 4-20 mA	9-30 VDC	0-50 psia			
								4M_WWF1	Injection Well 4M Flow 1	Differential Pressure Transmitter	AI: 4-20 mA	9-30 VDC	0-5 psid			
						1307AE	SIL	4M_WWL2	Injection Well 4M Level 2	Pressure Transmitter	AI: 4-20 mA	9-30 VDC	0-150 psia	109.8	130	145
								4M_WHP2	Injection Well 4M Head Pressure 2	Pressure Transmitter	AI: 4-20 mA	9-30 VDC	0-50 psia			
								4M_WWF2	Injection Well 4M Flow 2	Differential Pressure Transmitter	AI: 4-20 mA	9-30 VDC	0-5 psid			
								4M_WPP	Injection Well 4M Packer Pressure	Pressure Transmitter	AI: 4-20 mA	9-30 VDC	0-350 psia			

GENERAL NOTES:

1. PROVIDE A SPARE SHIELDED PAIR TO EACH INJECTION & OBSERVATION WELL INSTRUMENT ENCLOSURE FOR FUTURE USE.

TETRA TECH
www.tetratech.com
17885 Von Karman Avenue, Suite 500
Irvine, California 92614
Phone: 949-809-5000

DRAFTER ALH | DESIGNER NH | CHECKER MK | CADD PART NUMBER | REVIEWED BY | DATE

FILE NAME: $FILEL$

DATE	BY	DESCRIPTION

REVISIONS

REGISTERED PROFESSIONAL ENGINEER NAZEEN KASSEM No. E 15809 Exp. 12-31-16 ELECTRICAL STATE OF CALIFORNIA

PROJECT ENGINEER DATE

COUNTY OF LOS ANGELES DEPARTMENT OF PUBLIC WORKS

WEST COAST BASIN BARRIER PROJECT
TELEMETRY SYSTEM - PHASE II B
SEGMENT 1
INSTRUMENTATION SCHEDULE -1

PROJECT ID: FCC0001280 | PCA EF11715001 | DWG 176-D153.49 | SHEET: 49 OF 63

WEST COAST BASIN BARRIER PROJECT PHASE IIB INSTRUMENT SCHEDULE

SEGMENT	CITY	CABINET	WELL NAME	SITE TYPE	WELL TYPE	FCD	AQUIFER	INSTRUMENT TAG NAME	DESCRIPTION	INSTRUMENT TYPE	SIGNAL TYPE	SUPPLY VOLTAGE	ENGINEERING UNIT RANGE	REF POINT ELEV (ft)	SENSOR DEPTH (ft)	CABLE LENGTH (ft)
1	EL SEGUNDO	RIO-4K	4F	Injection	Dual			4F_WVLS	Injection Well 4F Vault Flooded	Level Switch	DI: Dry Contact	24 VDC				
						1307T	200FT	4F_WWL1	Injection Well 4F Level 1	Pressure Transmitter	AI: 4-20 mA	9-30 VDC	0-150 psia	120.8	130	145
								4F_WHP1	Injection Well 4F Head Pressure 1	Pressure Transmitter	AI: 4-20 mA	9-30 VDC	0-50 psia			
								4F_WWF1	Injection Well 4F Flow 1	Differential Pressure Transmitter	AI: 4-20 mA	9-30 VDC	0-5 psid			
						1307AB	SIL	4F_WWL2	Injection Well 4F Level 2	Pressure Transmitter	AI: 4-20 mA	9-30 VDC	0-150 psia	120.8	130	145
								4F_WHP2	Injection Well 4F Head Pressure 2	Pressure Transmitter	AI: 4-20 mA	9-30 VDC	0-50 psia			
								4F_WWF2	Injection Well 4F Flow 2	Differential Pressure Transmitter	AI: 4-20 mA	9-30 VDC	0-5 psid			
								4F_WPP	Injection Well 4F Packer Pressure	Pressure Transmitter	AI: 4-20 mA	9-30 VDC	0-350 psia			
			4FH	Observation	Multiple	1307K	200FT	4FH_WWL1	Observation Well 4FH Level 1	Pressure Transmitter	AI: 4-20 mA	9-30 VDC	0-30 psia	119.3	130	145
						1307J	SIL	4FH_WWL2	Observation Well 4FH Level 2	Pressure Transmitter	AI: 4-20 mA	9-30 VDC	0-30 psia	119.3	130	145
			4H	Injection	Dual			4H_WVLS	Injection Well 4H Vault Flooded	Level Switch	DI: Dry Contact	24 VDC				
						1307U	200FT	4H_WWL1	Injection Well 4H Level 1	Pressure Transmitter	AI: 4-20 mA	9-30 VDC	0-150 psia	124.8	130	145
								4H_WHP1	Injection Well 4H Head Pressure 1	Pressure Transmitter	AI: 4-20 mA	9-30 VDC	0-50 psia			
								4H_WWF1	Injection Well 4H Flow 1	Differential Pressure Transmitter	AI: 4-20 mA	9-30 VDC	0-5 psid			
						1307AC	SIL	4H_WWL2	Injection Well 4H Level 2	Pressure Transmitter	AI: 4-20 mA	9-30 VDC	0-150 psia	124.8	130	145
								4H_WHP2	Injection Well 4H Head Pressure 2	Pressure Transmitter	AI: 4-20 mA	9-30 VDC	0-50 psia			
								4H_WWF2	Injection Well 4H Flow 2	Differential Pressure Transmitter	AI: 4-20 mA	9-30 VDC	0-5 psid			
								4H_WPP	Injection Well 4H Packer Pressure	Pressure Transmitter	AI: 4-20 mA	9-30 VDC	0-350 psia			
1	EL SEGUNDO	RIO-4C							Remote I/O 4E AC Power Fail	Relay	DI: Dry Contact	120 VAC				
			4C	Injection	Dual			4C_WVLS	Injection Well 4C Vault Flooded	Level Switch	DI: Dry Contact	24 VDC				
						1307R	200FT	4C_WWL1	Injection Well 4C Level 1	Pressure Transmitter	AI: 4-20 mA	9-30 VDC	0-150 psia	127.9	130	145
								4C_WHP1	Injection Well 4C Head Pressure 1	Pressure Transmitter	AI: 4-20 mA	9-30 VDC	0-50 psia			
								4C_WWF1	Injection Well 4C Flow 1	Differential Pressure Transmitter	AI: 4-20 mA	9-30 VDC	0-5 psid			
						1307Z	SIL	4C_WWL2	Injection Well 4C Level 2	Pressure Transmitter	AI: 4-20 mA	9-30 VDC	0-150 psia	127.9	130	145
								4C_WHP2	Injection Well 4C Head Pressure 2	Pressure Transmitter	AI: 4-20 mA	9-30 VDC	0-50 psia			
								4C_WWF2	Injection Well 4C Flow 2	Differential Pressure Transmitter	AI: 4-20 mA	9-30 VDC	0-5 psid			
								4C_WPP	Injection Well 4C Packer Pressure	Pressure Transmitter	AI: 4-20 mA	9-30 VDC	0-350 psia			
			4CE	Observation	Multiple	1307G	200FT	4CE_WWL1	Observation Well 4CE Level 1	Pressure Transmitter	AI: 4-20 mA	9-30 VDC	0-30 psia	127.1	130	145
						1307F	SIL	4CE_WWL2	Observation Well 4CE Level 2	Pressure Transmitter	AI: 4-20 mA	9-30 VDC	0-30 psia	127.1	130	145
			4E	Injection	Dual			4E_WVLS	Injection Well 4E Vault Flooded	Level Switch	DI: Dry Contact	24 VDC				
						1307S	200FT	4E_WWL1	Injection Well 4E Level 1	Pressure Transmitter	AI: 4-20 mA	9-30 VDC	0-150 psia	127.8	130	145
								4E_WHP1	Injection Well 4E Head Pressure 1	Pressure Transmitter	AI: 4-20 mA	9-30 VDC	0-50 psia			
								4E_WWF1	Injection Well 4E Flow 1	Differential Pressure Transmitter	AI: 4-20 mA	9-30 VDC	0-5 psid			
						1307AA	SIL	4E_WWL2	Injection Well 4E Level 2	Pressure Transmitter	AI: 4-20 mA	9-30 VDC	0-150 psia	127.8	130	145
								4E_WHP2	Injection Well 4E Head Pressure 2	Pressure Transmitter	AI: 4-20 mA	9-30 VDC	0-50 psia			
								4E_WWF2	Injection Well 4E Flow 2	Differential Pressure Transmitter	AI: 4-20 mA	9-30 VDC	0-5 psid			
								4E_WPP	Injection Well 4E Packer Pressure	Pressure Transmitter	AI: 4-20 mA	9-30 VDC	0-350 psia			

GENERAL NOTES:

1. PROVIDE A SPARE SHIELDED PAIR TO EACH WELL INSTRUMENT ENCLOSURE FOR FUTURE USE.

TETRA TECH
www.tetratech.com
17885 Von Karman Avenue, Suite 500
Irvine, California 92614
Phone: 949-809-5000

DRAFTER ALH | DESIGNER NH | CHECKER MK | CADD PART NUMBER | REVIEWED BY | DATE

DATE	BY	DESCRIPTION

REVISIONS

REGISTERED PROFESSIONAL ENGINEER — JAMES KASSAY — No. E 15809 Exp. 12-31-16 — ELECTRICAL — STATE OF CALIFORNIA

PROJECT ENGINEER | DATE

COUNTY OF LOS ANGELES DEPARTMENT OF PUBLIC WORKS

WEST COAST BASIN BARRIER PROJECT
TELEMETRY SYSTEM - PHASE II B
SEGMENT 1
INSTRUMENTATION SCHEDULE -2

PROJECT ID: FCC0001280 | PCA EF11715001 | DWG 176-D153.50 | SHEET: 50 OF 63

FILE NAME: $FILE$

WEST COAST BASIN BARRIER PROJECT PHASE IIB INSTRUMENT SCHEDULE

SEGMENT	CITY	CABINET	WELL NAME	SITE TYPE	WELL TYPE	FCD	AQUIFER	INSTRUMENT TAG NAME	DESCRIPTION	INSTRUMENT TYPE	SIGNAL TYPE	SUPPLY VOLTAGE	ENGINEERING UNIT RANGE	REF POINT ELEV (ft)	SENSOR DEPTH (ft)	CABLE LENGTH (ft)
1	EL SEGUNDO	RIO-3Z							Remote I/O 4A AC Power Fail	Relay	DI: Dry Contact	120 VAC				
			3Z	Injection	Dual			3Z_WVLS	Injection Well 3Z Vault Flooded	Level Switch	DI: Dry Contact	24 VDC				
						1306H	200FT	3Z_WWL1	Injection Well 3Z Level 1	Pressure Transmitter	AI: 4-20 mA	9-30 VDC	0-150 psia	125.8	130	145
								3Z_WHP1	Injection Well 3Z Head Pressure 1	Pressure Transmitter	AI: 4-20 mA	9-30 VDC	0-50 psia			
								3Z_WWF1	Injection Well 3Z Flow 1	Differential Pressure Transmitter	AI: 4-20 mA	9-30 VDC	0-5 psid			
						1306J	SIL	3Z_WWL2	Injection Well 3Z Level 2	Pressure Transmitter	AI: 4-20 mA	9-30 VDC	0-150 psia	125.8	130	145
								3Z_WHP2	Injection Well 3Z Head Pressure 2	Pressure Transmitter	AI: 4-20 mA	9-30 VDC	0-50 psia			
								3Z_WWF2	Injection Well 3Z Flow 2	Differential Pressure Transmitter	AI: 4-20 mA	9-30 VDC	0-5 psid			
								3Z_WPP	Injection Well 3Z Packer Pressure	Pressure Transmitter	AI: 4-20 mA	9-30 VDC	0-350 psia			
			3ZA	Observation	Single	1306E	SIL	3ZA_WWL	Observation Well 3ZA Level	Pressure Transmitter	AI: 4-20 mA	9-30 VDC	0-30 psia	121.1	130	145
			4A	Injection	Dual			4A_WVLS	Injection Well 4A Vault Flooded	Level Switch	DI: Dry Contact	24 VDC				
						1307Q	200FT	4A_WWL1	Injection Well 4A Level 1	Pressure Transmitter	AI: 4-20 mA	9-30 VDC	0-150 psia	121.3	130	145
								4A_WHP1	Injection Well 4A Head Pressure 1	Pressure Transmitter	AI: 4-20 mA	9-30 VDC	0-50 psia			
								4A_WWF1	Injection Well 4A Flow 1	Differential Pressure Transmitter	AI: 4-20 mA	9-30 VDC	0-5 psid			
						1307Y	SIL	4A_WWL2	Injection Well 4A Level 2	Pressure Transmitter	AI: 4-20 mA	9-30 VDC	0-150 psia	121.3	130	145
								4A_WHP2	Injection Well 4A Head Pressure 2	Pressure Transmitter	AI: 4-20 mA	9-30 VDC	0-50 psia			
								4A_WWF2	Injection Well 4A Flow 2	Differential Pressure Transmitter	AI: 4-20 mA	9-30 VDC	0-5 psid			
								4A_WPP	Injection Well 4A Packer Pressure	Pressure Transmitter	AI: 4-20 mA	9-30 VDC	0-350 psia			

GENERAL NOTES:

1. PROVIDE A SPARE SHIELDED PAIR TO EACH WELL INSTRUMENT ENCLOSURE FOR FUTURE USE.

TETRA TECH
www.tetratech.com
17885 Von Karman Avenue, Suite 500
Irvine, California 92614
Phone: 949-809-5000

DRAFTER	DESIGNER	CHECKER	CADD PART NUMBER	REVIEWED BY	DATE
ALH	NH	MK			

DATE	BY	DESCRIPTION

REVISIONS

REGISTERED PROFESSIONAL ENGINEER
MAZEN KASSAB
No. E 15809
Exp. 12-31-16
ELECTRICAL
STATE OF CALIFORNIA

PROJECT ENGINEER DATE

COUNTY OF LOS ANGELES DEPARTMENT OF PUBLIC WORKS

WEST COAST BASIN BARRIER PROJECT
TELEMETRY SYSTEM - PHASE II B
SEGMENT 1
INSTRUMENTATION SCHEDULE -3

PROJECT ID: FCC0001280 | PCA EF11715001 | DWG 176-D153.51 | SHEET: 51 OF 63

FILE NAME: $FILE$

WEST COAST BASIN BARRIER PROJECT PHASE IIB INSTRUMENT SCHEDULE

SEGMENT	CITY	CABINET	WELL NAME	SITE TYPE	WELL TYPE	FCD	AQUIFER	INSTRUMENT TAG NAME	DESCRIPTION	INSTRUMENT TYPE	SIGNAL TYPE	SUPPLY VOLTAGE	ENGINEERING UNIT RANGE	REF POINT ELEV (ft)	SENSOR DEPTH (ft)	CABLE LENGTH (ft)
2	EL SEGUNDO	RIO-4W	4W	Injection	Dual			4W_WVLS	Injection Well 4W Vault Flooded	Level Switch	DI: Dry Contact	24 VDC				
						1308Z	200FT	4W_WWL1	Injection Well 4W Level 1	Pressure Transmitter	AI: 4-20 mA	9-30 VDC	0-150 psia	100	130	145
								4W_WHP1	Injection Well 4W Head Pressure 1	Pressure Transmitter	AI: 4-20 mA	9-30 VDC	0-50 psia			
								4W_WWF1	Injection Well 4W Flow 1	Differential Pressure Transmitter	AI: 4-20 mA	9-30 VDC	0-5 psid			
						1308AH	SIL	4W_WWL2	Injection Well 4W Level 2	Pressure Transmitter	AI: 4-20 mA	9-30 VDC	0-150 psia	100	130	145
								4W_WHP2	Injection Well 4W Head Pressure 2	Pressure Transmitter	AI: 4-20 mA	9-30 VDC	0-50 psia			
								4W_WWF2	Injection Well 4W Flow 2	Differential Pressure Transmitter	AI: 4-20 mA	9-30 VDC	0-5 psid			
								4W_WPP	Injection Well 4W Packer Pressure	Pressure Transmitter	AI: 4-20 mA	9-30 VDC	0-350 psia			
		RIO-5B	5B	Injection	Dual			5B_WVLS	Injection Well 5B Vault Flooded	Level Switch	DI: Dry Contact	24 VDC				
						1308AD	200FT	5B_WWL1	Injection Well 5B Level 1	Pressure Transmitter	AI: 4-20 mA	9-30 VDC	0-150 psia	98	115	130
								5B_WHP1	Injection Well 5B Head Pressure 1	Pressure Transmitter	AI: 4-20 mA	9-30 VDC	0-50 psia			
								5B_WWF1	Injection Well 5B Flow 1	Differential Pressure Transmitter	AI: 4-20 mA	9-30 VDC	0-15 psid			
						1308AE	SIL	5B_WWL2	Injection Well 5B Level 2	Pressure Transmitter	AI: 4-20 mA	9-30 VDC	0-150 psia	98	115	130
								5B_WHP2	Injection Well 5B Head Pressure 2	Pressure Transmitter	AI: 4-20 mA	9-30 VDC	0-50 psia			
								5B_WWF2	Injection Well 5B Flow 2	Differential Pressure Transmitter	AI: 4-20 mA	9-30 VDC	0-15 psid			
								5B_WPP	Injection Well 5B Packer Pressure	Pressure Transmitter	AI: 4-20 mA	9-30 VDC	0-350 psia			
		RIO-5L1	5M1	Injection	Dual			5M1_WVLS	Injection Well 5M1 Vault Flooded	Level Switch	DI: Dry Contact	24 VDC				
						1309AH	200FT	5M1_WWL1	Injection Well 5M1 Level 1	Pressure Transmitter	AI: 4-20 mA	9-30 VDC	0-150 psia	129	160	175
								5M1_WHP1	Injection Well 5M1 Head Pressure 1	Pressure Transmitter	AI: 4-20 mA	9-30 VDC	0-50 psia			
								5M1_WWF1	Injection Well 5M1 Flow 1	Differential Pressure Transmitter	AI: 4-20 mA	9-30 VDC	0-5 psid			
						1309AI	SIL	5M1_WWL2	Injection Well 5M1 Level 2	Pressure Transmitter	AI: 4-20 mA	9-30 VDC	0-150 psia	129	160	175
								5M1_WHP2	Injection Well 5M1 Head Pressure 2	Pressure Transmitter	AI: 4-20 mA	9-30 VDC	0-50 psia			
								5M1_WWF2	Injection Well 5M1 Flow 2	Differential Pressure Transmitter	AI: 4-20 mA	9-30 VDC	0-5 psid			
								5M1_WPP	Injection Well 5M1 Packer Pressure	Pressure Transmitter	AI: 4-20 mA	9-30 VDC	0-350 psia			
3	MANHATTAN BEACH	RIO-6E	6EH2	Observation	Single	691M	SIL	6EH2_WWL	Observation Well 6EH2 Level	Pressure Transmitter	AI: 4-20 mA	9-30 VDC	0-30 psia	96	115	130
4	HERMOSA BEACH	RIO-7E	7BE0.1*	Observation	Multiple	702R	200FT	7BE0.1_WWL1	Observation Well 7BE0.1 Level 1	Pressure Transmitter	AI: 4-20 mA	9-30 VDC	0-30 psia	64	115	130
						702S	SIL	7BE0.1_WWL2	Observation Well 7BE0.1 Level 2	Pressure Transmitter	AI: 4-20 mA	9-30 VDC	0-30 psia	64	115	130
						702T	LSP	7BE0.1_WWL3	Observation Well 7BE0.1 Level 3	Pressure Transmitter	AI: 4-20 mA	9-30 VDC	0-30 psia	64	115	130

GENERAL NOTES:

1. PROVIDE A SPARE SHIELDED PAIR TO EACH WELL INSTRUMENT ENCLOSURE FOR FUTURE USE.

* INDICATES OPTIONAL WELL UNDER WCBBP PHASE IIB

TETRA TECH
www.tetratech.com
17885 Von Karman Avenue, Suite 500
Irvine, California 92614
Phone: 949-809-5000

DATE	BY	DESCRIPTION

REVISIONS

REGISTERED PROFESSIONAL ENGINEER — DARREN KASSOFF — No. E 15809 — Exp. 12-31-16 — ELECTRICAL — STATE OF CALIFORNIA

PROJECT ENGINEER DATE

COUNTY OF LOS ANGELES DEPARTMENT OF PUBLIC WORKS

WEST COAST BASIN BARRIER PROJECT
TELEMETRY SYSTEM - PHASE II B
SEGMENT 2, 3, AND 4
INSTRUMENTATION SCHEDULE

PROJECT ID: FCC0001280 | PCA EF11715001 | DWG 176-D153.52 | SHEET: 52 OF 63

DRAFTER ALH | DESIGNER NH | CHECKER MK | CADD PART NUMBER | REVIEWED BY | DATE

FILE NAME: $FILE1$

WEST COAST BASIN BARRIER PROJECT PHASE IIB INSTRUMENT SCHEDULE

SEGMENT	CITY	CABINET	WELL NAME	SITE TYPE	WELL TYPE	FCD	AQUIFER	INSTRUMENT TAG NAME	DESCRIPTION	INSTRUMENT TYPE	SIGNAL TYPE	SUPPLY VOLTAGE	ENGINEERING UNIT RANGE	REF POINT ELEV (ft)	SENSOR DEPTH (ft)	CABLE LENGTH (ft)
5	REDONDO BEACH	RIO-8F2	8F	Injection	Single	714K	SIL	8F_WWL	Injection Well 8F Level	Pressure Transmitter	AI: 4-20 mA	9-30 VDC	0-150 psia	193	220	235
								8F_WHP	Injection Well 8F Head Pressure	Pressure Transmitter	AI: 4-20 mA	9-30 VDC	0-50 psia			
								8F_WWF	Injection Well 8F Flow	Differential Pressure Transmitter	AI: 4-20 mA	9-30 VDC	0-15 psid			
		RIO-8M	8M1	Injection	Single			8M1_WVLS	Injection Well 8M1 Vault Flooded	Level Switch	DI: Dry Contact	24 VDC				
						724L	SIL	8M1_WWL	Injection Well 8M1 Level	Pressure Transmitter	AI: 4-20 mA	9-30 VDC	0-150 psia	143	160	175
								8M1_WHP	Injection Well 8M1 Head Pressure	Pressure Transmitter	AI: 4-20 mA	9-30 VDC	0-50 psia			
								8M1_WWF	Injection Well 8M1 Flow	Differential Pressure Transmitter	AI: 4-20 mA	9-30 VDC	0-5 psid			
		RIO-8S	8T	Injection	Single			8T_WVLS	Injection Well 8T Vault Flooded	Level Switch	DI: Dry Contact	24 VDC				
						725BG	SIL	8T_WWL	Injection Well 8T Level	Pressure Transmitter	AI: 4-20 mA	9-30 VDC	0-150 psia	137	160	175
								8T_WHP	Injection Well 8T Head Pressure	Pressure Transmitter	AI: 4-20 mA	9-30 VDC	0-50 psia			
								8T_WWF	Injection Well 8T Flow	Differential Pressure Transmitter	AI: 4-20 mA	9-30 VDC	0-5 psid			
		RIO-8X	8Y	Injection	Single			8Y_WVLS	Injection Well 8Y Vault Flooded	Level Switch	DI: Dry Contact	24 VDC				
						725V	SIL	8Y_WWL	Injection Well 8Y Level	Pressure Transmitter	AI: 4-20 mA	9-30 VDC	0-150 psia	149	160	175
								8Y_WHP	Injection Well 8Y Head Pressure	Pressure Transmitter	AI: 4-20 mA	9-30 VDC	0-50 psia			
								8Y_WWF	Injection Well 8Y Flow	Differential Pressure Transmitter	AI: 4-20 mA	9-30 VDC	0-5 psid			
		RIO-9D1	9E	Injection	Single			9E_WVLS	Injection Well 9E Vault Flooded	Level Switch	DI: Dry Contact	24 VDC				
						726AB	SIL	9E_WWL	Injection Well 9E Level	Pressure Transmitter	AI: 4-20 mA	9-30 VDC	0-150 psia	148	160	175
								9E_WHP	Injection Well 9E Head Pressure	Pressure Transmitter	AI: 4-20 mA	9-30 VDC	0-50 psia			
								9E_WWF	Injection Well 9E Flow	Differential Pressure Transmitter	AI: 4-20 mA	9-30 VDC	0-5 psid			
			9F	Injection	Single			9F_WVLS	Injection Well 9F Vault Flooded	Level Switch	DI: Dry Contact	24 VDC				
						726AA	SIL	9F_WWL	Injection Well 9F Level	Pressure Transmitter	AI: 4-20 mA	9-30 VDC	0-150 psia	139	160	175
								9F_WHP	Injection Well 9F Head Pressure	Pressure Transmitter	AI: 4-20 mA	9-30 VDC	0-50 psia			
								9F_WWF	Injection Well 9F Flow	Differential Pressure Transmitter	AI: 4-20 mA	9-30 VDC	0-5 psid			
5	REDONDO BEACH	RIO-9G	9J	Injection	Single			9J_WVLS	Injection Well 9J Vault Flooded	Level Switch	DI: Dry Contact	24 VDC				
						726AN	SIL	9J_WWL	Injection Well 9J Level	Pressure Transmitter	AI: 4-20 mA	9-30 VDC	0-150 psia	140	160	175
								9J_WHP	Injection Well 9J Head Pressure	Pressure Transmitter	AI: 4-20 mA	9-30 VDC	0-50 psia			
								9J_WWF	Injection Well 9J Flow	Differential Pressure Transmitter	AI: 4-20 mA	9-30 VDC	0-5 psid			
			9GJ***	Observation	Single	TBD	LSP	9GJ_WWL2	Observation Well 9GJ Level	Pressure Transmitter	AI: 4-20 mA	9-30 VDC	0-30 psia	137	160	175
		RIO-9R	9R1***(SIL)	Injection	Single			9R1(SIL)_WVLS1	Injection Well 9R1(SIL) Vault Flooded	Level Switch	DI: Dry Contact	24 VDC				
						TBD	SIL	9R1(SIL)_WWL1	Injection Well 9R1(SIL) Level	Pressure Transmitter	AI: 4-20 mA	9-30 VDC	0-150 psia	146	160	175
								9R1(SIL)_WHP1	Injection Well 9R1(SIL) Head Pressure	Pressure Transmitter	AI: 4-20 mA	9-30 VDC	0-50 psia			
								9R1(SIL)_WWFM1	Injection Well 9R1(SIL) Flow	Mag Meter**	AI: 4-20 mA	9-30 VDC				
			9R1***(LSP)	Injection	Single			9R1(LSP)_WVLS2	Injection Well 9R1(LSP) Vault Flooded	Level Switch	DI: Dry Contact	24 VDC				
						TBD	LSP	9R1(LSP)_WWL2	Injection Well 9R1(LSP) Level	Pressure Transmitter	AI: 4-20 mA	9-30 VDC	0-150 psia	146	160	175
								9R1(LSP)_WHP2	Injection Well 9R1(LSP) Head Pressure	Pressure Transmitter	AI: 4-20 mA	9-30 VDC	0-50 psia			
								9R1(LSP)_WWFM2	Injection Well 9R1(LSP) Flow	Mag Meter**	AI: 4-20 mA	9-30 VDC				

GENERAL NOTES:

1. PROVIDE A SPARE SHIELDED PAIR TO EACH WELL INSTRUMENT ENCLOSURE FOR FUTURE USE.

** MAGNETIC FLOW METER TO BE PROVIDED UNDER A SEPARATE PROJECT.

*** INDICATES OPTIONAL WELLS UNDER WCBBP PHASE IIB

TETRA TECH
www.tetratech.com
17885 Von Karman Avenue, Suite 500
Irvine, California 92614
Phone: 949-809-5000

DATE	BY	DESCRIPTION

REVISIONS

REGISTERED PROFESSIONAL ENGINEER — NAZEN KASSIS — No. E 15809 — Exp. 12-31-16 — ELECTRICAL — STATE OF CALIFORNIA

PROJECT ENGINEER DATE

COUNTY OF LOS ANGELES DEPARTMENT OF PUBLIC WORKS

WEST COAST BASIN BARRIER PROJECT
TELEMETRY SYSTEM - PHASE II B
SEGMENT 5
INSTRUMENTATION SCHEDULE -1

PROJECT ID: FCC0001280 | PCA EF11715001 | DWG 176-D153.53 | SHEET: 53 OF 63

DRAFTER ALH | DESIGNER NH | CHECKER MK | CADD PART NUMBER | REVIEWED BY | DATE

FILE NAME: $FILEL$

WEST COAST BASIN BARRIER PROJECT PHASE IIB INSTRUMENT SCHEDULE

SEGMENT	CITY	CABINET	WELL NAME	SITE TYPE	WELL TYPE	FCD	AQUIFER	INSTRUMENT TAG NAME	DESCRIPTION	INSTRUMENT TYPE	SIGNAL TYPE	SUPPLY VOLTAGE	ENGINEERING UNIT RANGE	REF POINT ELEV (ft)	SENSOR DEPTH (ft)	CABLE LENGTH (ft)
5	REDONDO BEACH	RIO-9U	9U1V1***	Observation	Multiple	TBD	SIL	9U1V1_WWL1	Observation Well 9U1V1 Level 1	Pressure Transmitter	AI: 4-20 mA	9-30 VDC	0-30 psia	128	160	175
						TBD	LSP	9U1V1_WWL2	Observation Well 9U1V1 Level 2	Pressure Transmitter	AI: 4-20 mA	9-30 VDC	0-30 psia	128	160	175
			9U1***(SIL)	Injection	Single			9U1(SIL)_WVLS1	Injection Well 9U1(SIL) Vault Flooded	Level Switch	DI: Dry Contact	24 VDC				
						TBD	SIL	9U1(SIL)_WWL1	Injection Well 9U1(SIL) Level	Pressure Transmitter	AI: 4-20 mA	9-30 VDC	0-150 psia	137	160	175
								9U1(SIL)_WHP1	Injection Well 9U1(SIL) Head Pressure	Pressure Transmitter	AI: 4-20 mA	9-30 VDC	0-50 psia			
								9U1(SIL)_WWFM1	Injection Well 9U1(SIL) Flow	Mag Meter**	AI: 4-20 mA	9-30 VDC				
			9U1***(LSP)	Injection	Single			9U1(LSP)_WVLS2	Injection Well 9U1(LSP) Vault Flooded	Level Switch	DI: Dry Contact	24 VDC				
						TBD	SIL	9U1(LSP)_WWL2	Injection Well 9U1(LSP) Level	Pressure Transmitter	AI: 4-20 mA	9-30 VDC	0-150 psia	137	160	175
								9U1(LSP)_WHP2	Injection Well 9U1(LSP) Head Pressure	Pressure Transmitter	AI: 4-20 mA	9-30 VDC	0-50 psia			
								9U1(LSP)_WWFM2	Injection Well 9U1(LSP) Flow	Mag Meter**	AI: 4-20 mA	9-30 VDC				
		RIO-9X	9XY	Observation	Single	727W	SIL	9XY_WWL	Observation Well 9XY Level	Pressure Transmitter	AI: 4-20 mA	9-30 VDC	0-30 psia	111	130	145
		RIO-10L	10J1L***	Observation	Multiple	TBD	SIL	10J1L_WWL1	Observation Well 10J1L Level 1	Pressure Transmitter	AI: 4-20 mA	9-30 VDC	0-30 psia	120	160	175
						TBD	LSP	10J1L_WWL2	Observation Well 10J1L Level 2	Pressure Transmitter	AI: 4-20 mA	9-30 VDC	0-30 psia	120	160	175

GENERAL NOTES:

1. PROVIDE A SPARE SHIELDED PAIR TO EACH WELL INSTRUMENT ENCLOSURE FOR FUTURE USE.

** MAGNETIC FLOW METER TO BE PROVIDED UNDER A SEPARATE PROJECT.

*** INDICATES OPTIONAL WELLS UNDER WCBBP PHASE IIB

TETRA TECH
www.tetratech.com
17885 Von Karman Avenue, Suite 500
Irvine, California 92614
Phone: 949-809-5000

DRAFTER ALH | DESIGNER NH | CHECKER MK | CADD PART NUMBER | REVIEWED BY | DATE

DATE	BY	DESCRIPTION

REVISIONS

REGISTERED PROFESSIONAL ENGINEER DARZEN KASSAJI No. E 15809 Exp. 12-31-15 ELECTRICAL STATE OF CALIFORNIA

PROJECT ENGINEER DATE

COUNTY OF LOS ANGELES DEPARTMENT OF PUBLIC WORKS

WEST COAST BASIN BARRIER PROJECT
TELEMETRY SYSTEM - PHASE II B
SEGMENT 5
INSTRUMENTATION SCHEDULE - 2

PROJECT ID: FCC0001280 | PCA EF11715001 | DWG 176-D153.54 | SHEET: 54 OF 63

FILE NAME: $FILEL$

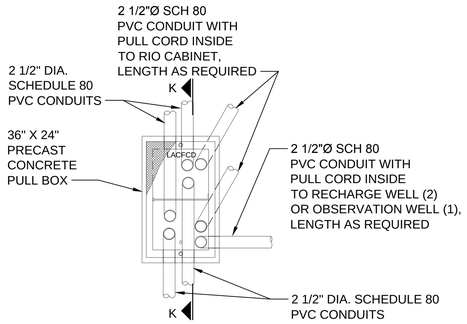

11 TYPICAL EXISTING PULL BOX CONNECTION TO ABOVE GROUND RIO CABINET

SCALE: NOT TO SCALE

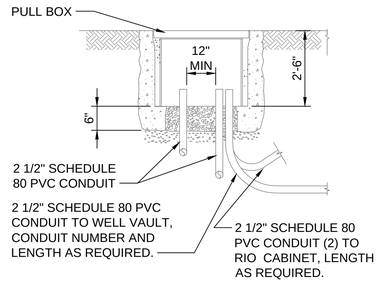

SECTION K-K

SCALE: NOT TO SCALE

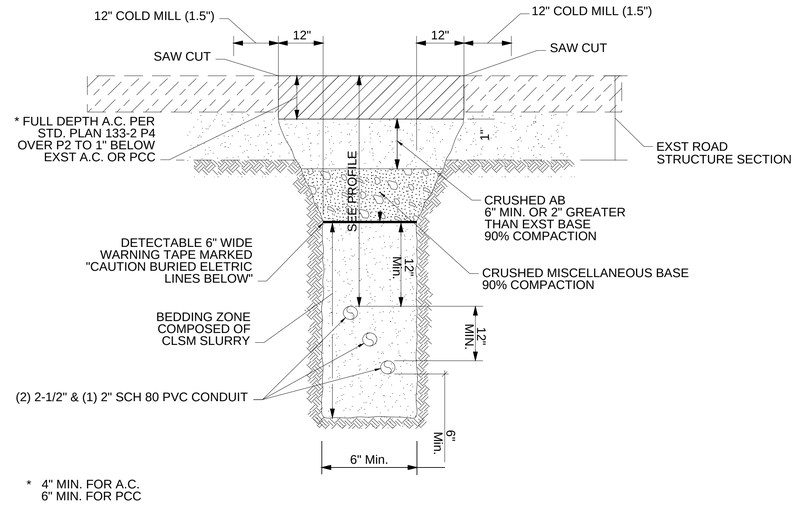

* 4" MIN. FOR A.C.
6" MIN. FOR PCC

12A TYPICAL CONDUIT TRENCH DETAIL (PAVED AREA)

SCALE: NOT TO SCALE

NOTE: TRENCH MUST BE PER CITY OF EL SEGUNDO AND HERMOSA BEACH DETAILS AND REQUIREMENTS

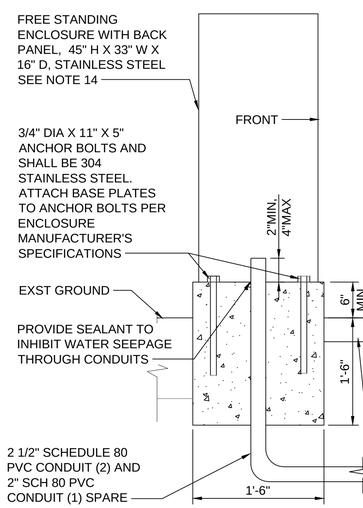

SECTION C1-C1

SCALE: NOT TO SCALE

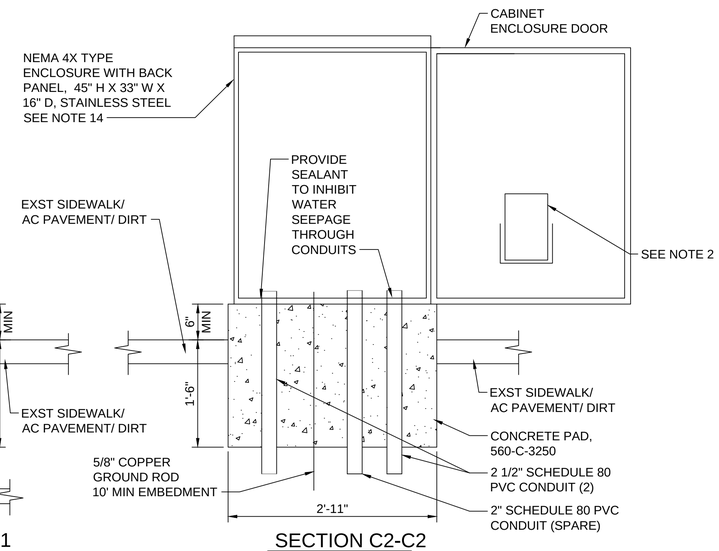

SECTION C2-C2

SCALE: NOT TO SCALE

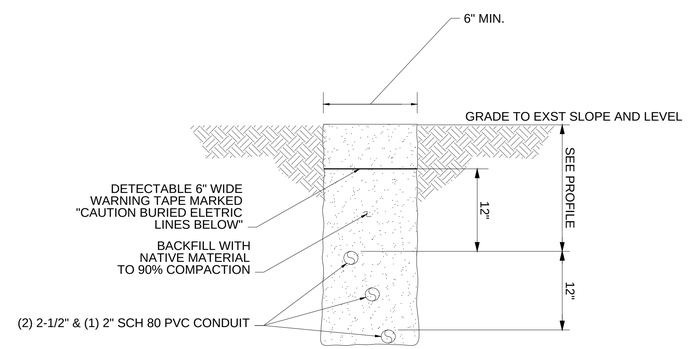

12B TYPICAL CONDUIT TRENCH DETAIL (UNPAVED AREA)

SCALE: NOT TO SCALE

NOTE: TRENCH MUST BE PER CITY OF EL SEGUNDO AND HERMOSA BEACH DETAILS AND REQUIREMENTS

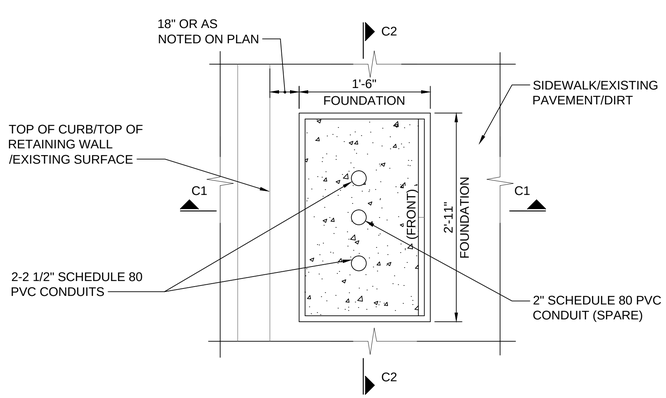

13 NEW ABOVE GROUND RIO CABINET FOUNDATION

SCALE: NOT TO SCALE

GENERAL NOTES:

1. UNLESS NOTED OTHERWISE, DETAILS ON THIS SHEET SPECIFY RACEWAY AND ENCLOSURES INSTALLED DURING PHASE I AND IB CONSTRUCTION. PROVIDE CONDUCTORS, CABLE AND CONTROL SYSTEM COMPONENTS AS INDICATED HERE AND ON OTHER SHEETS.
2. PROVIDE O&M MANUAL.
3. THE CONTRACTOR SHALL RESTORE THE CURB, GUTTER, PAVEMENT AND TRAFFIC STRIPING PER CA. DEPT. OF TRANSPORTATION AND CITY REQUIREMENTS.
4. THE CONTRACTOR SHALL ADJUST CONDUIT ALIGNMENT AS DIRECTED BY THE FIELD ENGINEER TO AVOID INTERFERENCE WITH EXISTING VAULTS, STRUCTURES, AND UNDERGROUND UTILITIES.
5. 2 - 2.5" and 1 - 2" SCH.80 PVC CONDUITS WILL BE INSTALLED BETWEEN THE EXISTING ADJACENT PULL BOX AND NEW CABINET. CONDUITS WILL BE OPEN TRENCHED.
6. STEEL PLATING SHALL BE PROVIDED AS IT SEEMS NECESSARY.
7. THE CONDUITS SHALL BE CONSTRUCTED SO AS TO PROVIDE THE FOLLOWING CLEARANCES TO EXISTING OR OTHER PROPOSED UNDERGROUND CONDUITS OR STRUCTURES:
   A. HORIZONTAL: 24-INCHES OUTSIDE TO OUTSIDE
   B. VERTICAL: 12-INCHES OUTSIDE TO OUTSIDE
8. ALL PAVEMENT AND OTHER EXISTING IMPROVEMENTS TO BE RECONSTRUCTED SHALL BE CONSTRUCTED AT THE SAME ELEVATION AND LOCATION AS THE EXISTING IMPROVEMENTS, UNLESS OTHERWISE NOTED.
9. THE WORK SHOWN ON THESE PLANS REQUIRES THE PRIME CONTRACTOR TO HAVE A VALID CLASS A LICENSE ISSUED BY THE STATE OF CALIFORNIA.
10. 48 HOURS PRIOR TO COMMENCEMENT OF CONSTRUCTION ACTIVITIES, THE CONTRACTOR SHALL CONTACT SHELL COMPANY TO ARRANGE FOR FIELD MARKINGS OF SHELL'S FACILITIES. THIS NOTIFICATION IS IN ADDITION TO NOTIFICATION THROUGH UNDERGROUND SERVICE ALERT.
11. CONTRACTOR'S ATTENTION IS DIRECTED TO THE EXISTENCE OF VARIOUS CROSSING UTILITIES ALONG THE PROPOSED CONDUIT ALIGNMENT. CARE SHALL BE TAKEN TO ENSURE THAT ALL UTILITIES ARE AVOIDED WITH SUFFICIENT CLEARANCE BY WAY OF AN OBSERVATION BOREHOLE OR OTHER APPROVED METHOD.
12. THE CONTRACTOR SHALL DETERMINE THE EXACT VERTICAL LOCATIONS OF ALL CROSSING UTILITIES PRIOR TO START OF CONSTRUCTION TO AVOID CONFLICT.
13. FURNISH AND INSTALL A NYLON PULL CORD INSIDE ALL CONDUIT SEGMENTS.
14. INCLUDE CABINET LABEL TO EXTERIOR OF ENCLOSURE. SPECIFY INJECTION WELL NAME AND "RIO". LABEL SHALL BE PHENOLIC LABEL 4"X8" , BLACK BACKGROUND WITH WHITE LETTERING.

DATE	BY	DESCRIPTION

REVISIONS

STEVEN KASSOFF, No. E 15809, Exp. 12-31-16, ELECTRICAL, STATE OF CALIFORNIA

PROJECT ENGINEER DATE

COUNTY OF LOS ANGELES DEPARTMENT OF PUBLIC WORKS

WEST COAST BASIN BARRIER PROJECT
TELEMETRY SYSTEM - PHASE II B
MISCELLANEOUS
DETAILS - 1

PROJECT ID: FCC0001280 | PCA EF11715001 | DWG 176-D153.55 | SHEET: 55 OF 63

TETRA TECH
www.tetratech.com
17885 Von Karman Avenue, Suite 500
Irvine, California 92614
Phone: 949-809-5000

DRAFTER ALH | DESIGNER NH | CHECKER MK | CADD PART NUMBER | REVIEWED BY | DATE

FILE NAME: $FILEL$

GENERAL NOTES:

1. USE EXISTING TUBING WHERE POSSIBLE. CUT AND INSERT BRASS "T" THEN RUN TUBING TO INSTRUMENT ENCLOSURE. WHERE ADDITIONAL TUBING IS REQUIRED USE SAME SIZE AND MATERIAL AS EXISTING.
2. DO NOT SPLICE TUBING EXCEPT FOR INSTALLATION OF THE HARDWARE FOR THE REQUIRED CONNECTIONS.
3. ROUTE TUBING AND SENSOR CABLE ALONG PIPING ATTACHED WITH BLACK TY-RAP WIRE TIES. DO NOT OBSTRUCT VALVE OPERATION.
4. STRAP WIRES AND TUBING TO WALLS USING NYLON CABLE CLAMPS APPROPRIATELY SIZED SO THAT AIR PRESSURE IN TUBING IS NOT RESTRICTED. ATTACH CLAMPS TO WALL USING #12 X 1" (MIN.) SCREWS AND PLASTIC ANCHORS.
5. INSTALL LEVEL SWITCH SO THAT CIRCUIT IS CLOSED WHEN STANDING WATER IS PRESENT IN THE VAULT. CONFIRM HEIGHT WITH AGENCY.
6. CONTRACTOR SHALL LOCATE INSTRUMENT PANEL IN VAULT FOR EASY ACCESS FOR MAINTENANCE.
7. UNLESS NOTED OTHERWISE DETAILS ON THIS SHEET SPECIFY RACEWAY AND ENCLOSURES INSTALLED DURING PHASE I AND PHASE IB CONSTRUCTION. PROVIDE CONDUCTORS, CABLE AND CONTROL SYSTEM COMPONENTS AS INDICATED ON OTHER SHEETS.
8. SEAL CONDUIT AT SENSOR END AND AT ENCLOSURE END TO MAINTAIN IP67 RATING OF FLOW SENSOR AND TO KEEP WATER OUT OF CONDUIT.
9. INSTALL PRECAST CONCRETE VAULT WITH BOLT DOWN GALVANIZED STEEL, DOUBLE DOOR TYPE VAULT COVER. VAULT AND VAULT COVER SHALL BE DESIGNED TO WITHSTAND AASHTO H-20 LOADING. ALL OBSERVATION WELL VAULT COVERS SHALL BE PERMANENTLY MARKED "LACFCD" AND WITH THE WELL NUMBER, 2" MINIMUM LETTERING.
10. LACFCD TO DRILL HOLE INTO WELL HEADER PLATE AND INSTALL A NEEDLE VALVE FOR THE WELL CASING PRESSURE SENSOR TO BE CONNECTED. IF THIS IS NOT FEASIBLE, TAP NEEDLE VALVE INTO EDUCTOR PIPE AS SHOWN.

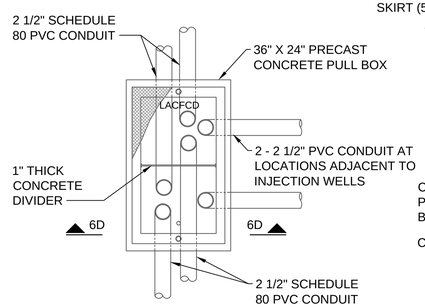

TYPICAL EXISTING PULL BOX TO INJECTION WELL

15 – SCALE: NOT TO SCALE

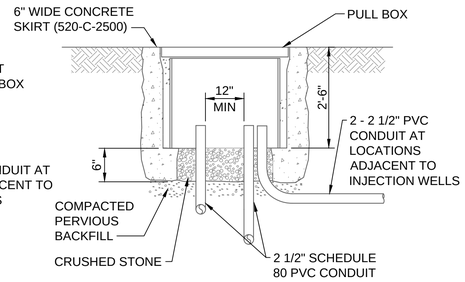

SECTION 6D-6D

SCALE: NOT TO SCALE

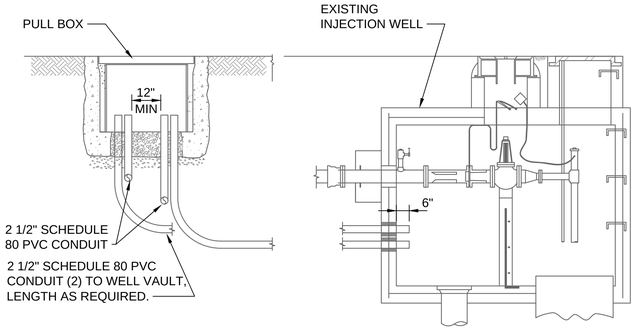

TYPICAL EXISTING PULL BOX CONNECTION TO EXISTING INJECTION WELL

16 – SCALE: NOT TO SCALE

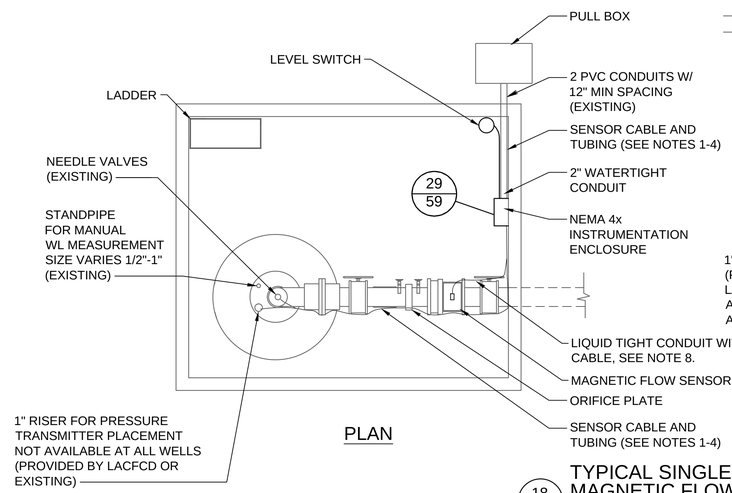

PLAN

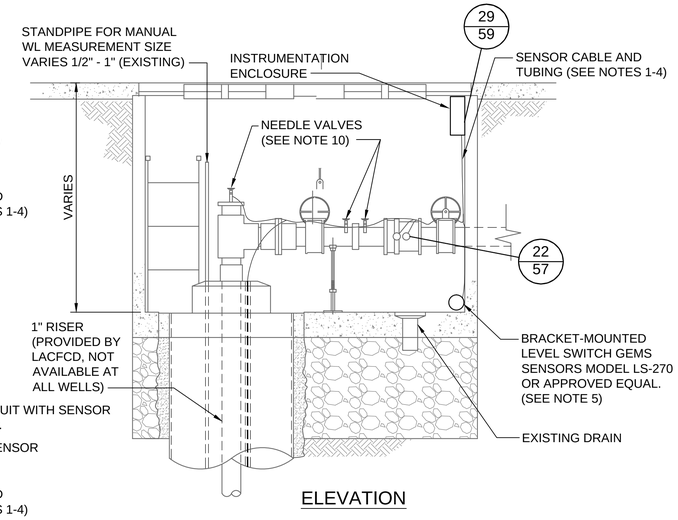

ELEVATION

TYPICAL SINGLE INJECTION WELL WITH MAGNETIC FLOW METER INSTALLATION

18 – SCALE: NOT TO SCALE

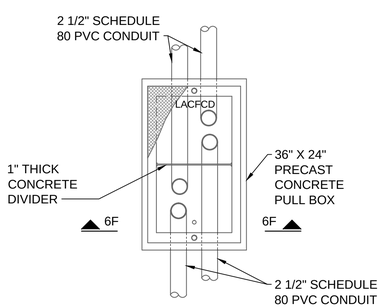

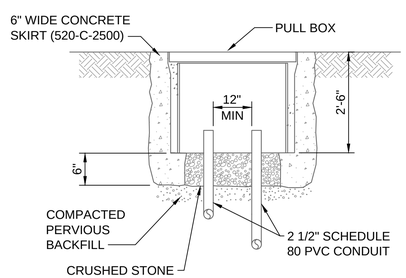

SECTION 6F-6F

SCALE: NOT TO SCALE

TYPICAL EXISTING INTERMEDIATE PULLBOX INSTALLATION

17 – SCALE: NOT TO SCALE

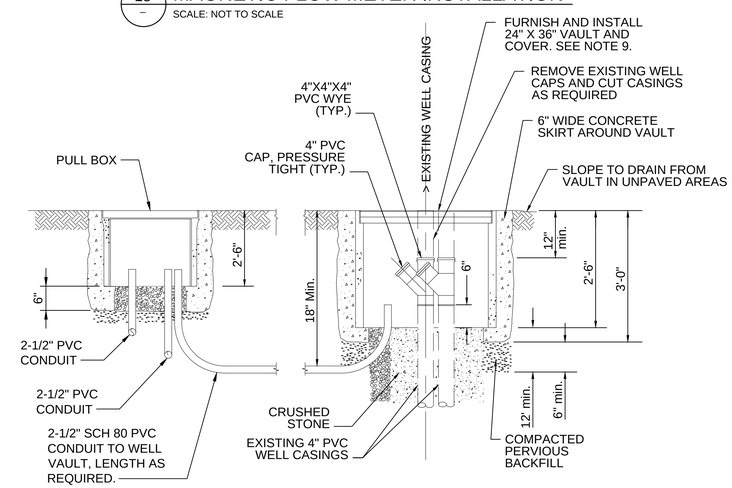

TYPICAL OBSERVATION WELL/VAULT INSTALLATION DETAIL

19 – SCALE: NOT TO SCALE

DATE	BY	DESCRIPTION

REVISIONS

REGISTERED PROFESSIONAL ENGINEER — JAMEEN KASSEF — No. E 15809 — Exp. 12-31-16 — ELECTRICAL — STATE OF CALIFORNIA

PROJECT ENGINEER DATE

COUNTY OF LOS ANGELES DEPARTMENT OF PUBLIC WORKS

WEST COAST BASIN BARRIER PROJECT
TELEMETRY SYSTEM - PHASE II B
MISCELLANEOUS
DETAILS - 2

PROJECT ID: FCC0001280 | PCA EF11715001 | DWG 176-D153.56 | SHEET: 56 OF 63

TETRA TECH
www.tetratech.com
17885 Von Karman Avenue, Suite 500
Irvine, California 92614
Phone: 949-809-5000

DRAFTER ALH | DESIGNER NH | CHECKER MK | CADD PART NUMBER | REVIEWED BY | DATE

FILE NAME: $FILE$

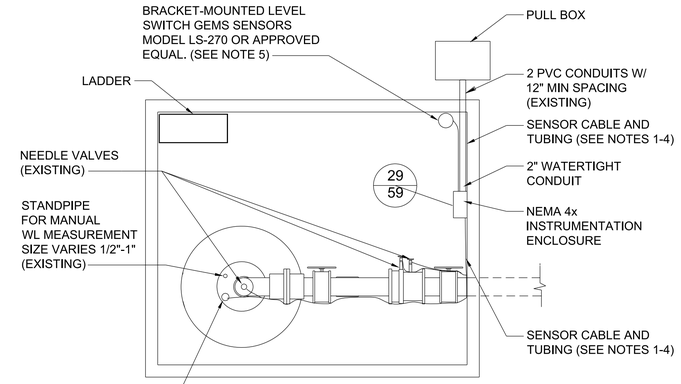

PLAN

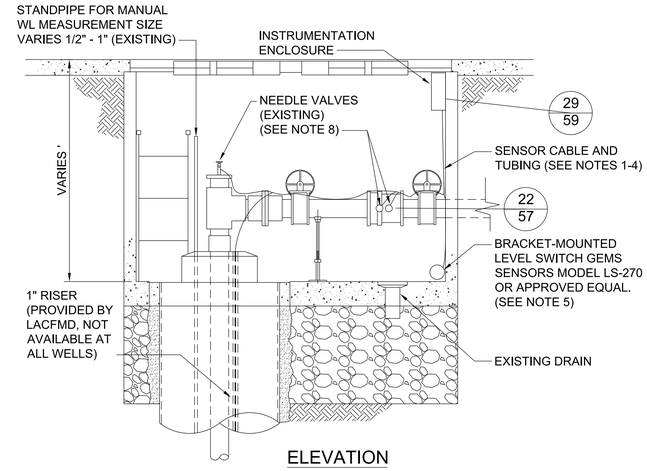

ELEVATION

20 – TYPICAL SINGLE INJECTION WELL WITHOUT MAGNETIC FLOW METER SENSOR INSTALLATION

SCALE: NOT TO SCALE

GENERAL NOTES:

1. USE EXISTING TUBING WHERE POSSIBLE. CUT AND INSERT STAINLESS STEEL "T" THEN RUN TUBING TO INSTRUMENT ENCLOSURE. WHERE ADDITIONAL TUBING IS REQUIRED USE SAME SIZE AND MATERIAL AS EXISTING.
2. DO NOT SPLICE TUBING EXCEPT FOR INSTALLATION OF THE HARDWARE FOR THE REQUIRED CONNECTIONS.
3. ROUTE TUBING AND SENSOR CABLE ALONG PIPING ATTACHED WITH BLACK TY-RAP WIRE TIES. DO NOT OBSTRUCT VALVE OPERATION.
4. STRAP WIRES AND TUBING TO WALLS USING NYLON CABLE CLAMPS APPROPRIATELY SIZED SO THAT AIR PRESSURE IN TUBING IS NOT RESTRICTED. ATTACH CLAMPS TO WALL USING #12 X 1" (MIN.) SCREWS AND PLASTIC ANCHORS.
5. INSTALL LEVEL SWITCH SO THAT CIRCUIT IS CLOSED WHEN STANDING WATER IS PRESENT IN THE VAULT. CONFIRM HEIGHT WITH AGENCY.
6. CONTRACTOR SHALL LOCATE INSTRUMENT PANEL IN VAULT FOR EASY ACCESS FOR MAINTENANCE.
7. UNLESS NOTED OTHERWISE DETAILS ON THIS SHEET SPECIFY RACEWAY AND ENCLOSURES INSTALLED DURING PHASE I AND PHASE IB CONSTRUCTION. PROVIDE CONDUCTORS, CABLE AND CONTROL SYSTEM COMPONENTS AS INDICATED ON OTHER SHEETS.
8. LACFCD TO DRILL HOLE INTO WELL HEADER PLATE AND INSTALL A NEEDLE VALVE FOR THE WELL CASING PRESSURE SENSOR TO BE CONNECTED. IF THIS IS NOT FEASIBLE, TAP NEEDLE VALVE INTO EDUCTOR PIPE AS SHOWN.
9. INSTALL STAINLESS STEEL CONNECTOR ON INJECTION WELL BASEPLATE FOR PACKER PRESSURE SENSOR LINE CONNECTION. USE ⅜" OD X ⅜" MALE NPT DK-LOK MODEL NO. DMC6-6N-S.
10. INSTALL ON END OF PACKER PRESSURE SENSOR TUBING NEW STAINLESS STELL QUICK CONNECT BODY DK-LOK MODEL DQBB-D-6T-S AND NEW STAINLESS STEEL QUICK CONNECT STEM DK-LOK MODEL NO. DQSB-M-4N-S.

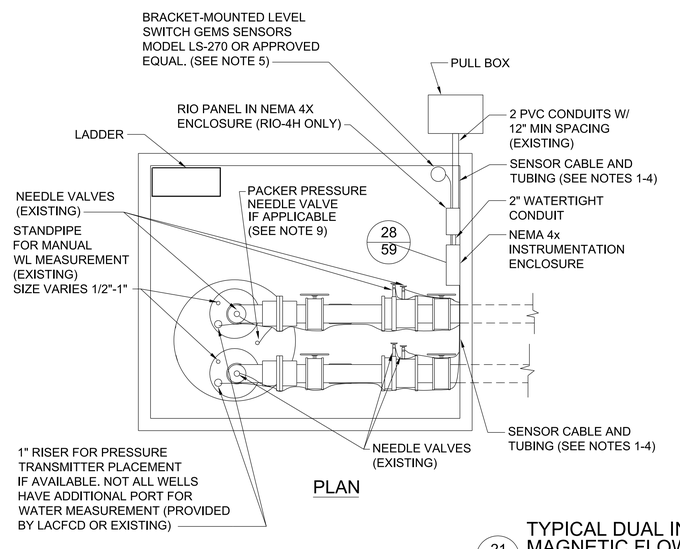

PLAN

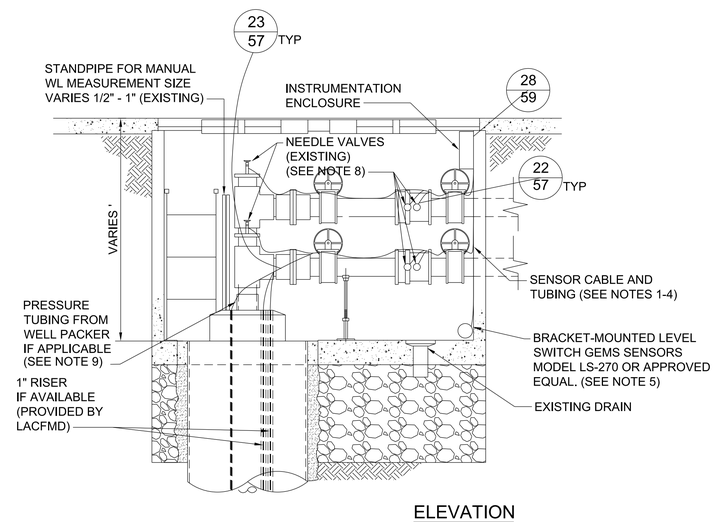

ELEVATION

21 – TYPICAL DUAL INJECTION WELL WITHOUT MAGNETIC FLOW METER SENSOR INSTALLATION

SCALE: NOT TO SCALE

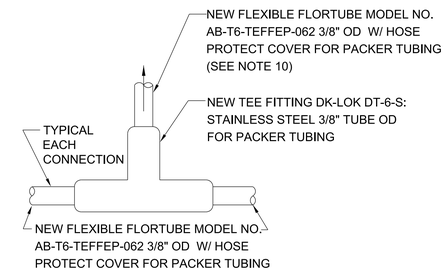

23 – PACKER SENSOR TUBING TEE FITTING INSTALLATION

SCALE: NOT TO SCALE

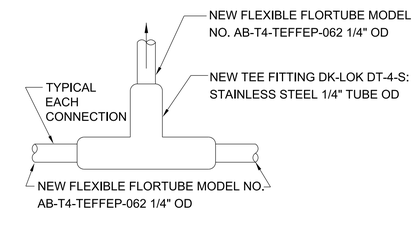

22 – SENSOR TUBING TEE FITTING INSTALLATION

SCALE: NOT TO SCALE

DRAFTER	DESIGNER	CHECKER	CADD PART NUMBER	REVIEWED BY	DATE
ALH	NH	MK			

FILE NAME: $FILE3

TETRA TECH
www.tetratech.com
17885 Von Karman Avenue, Suite 500
Irvine, California 92614
Phone: 949-809-5000

DATE	BY	DESCRIPTION

REVISIONS

REGISTERED PROFESSIONAL ENGINEER — MAZEN KASSAB — No. E 15809 — Exp. 12-31-16 — ELECTRICAL — STATE OF CALIFORNIA

PROJECT ENGINEER DATE

COUNTY OF LOS ANGELES DEPARTMENT OF PUBLIC WORKS

WEST COAST BASIN BARRIER PROJECT
TELEMETRY SYSTEM - PHASE II B
MISCELLANEOUS
DETAILS - 3

PROJECT ID: FCC0001280 | PCA EF11715001 | DWG 176-D153.57 | SHEET: 57 OF 63

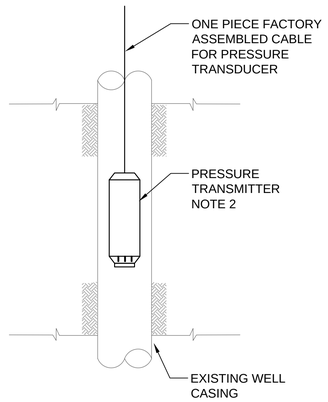

23 – TYPICAL PRESSURE TRANSMITTER IN AN OBSERVATION WELL
SCALE: NOT TO SCALE

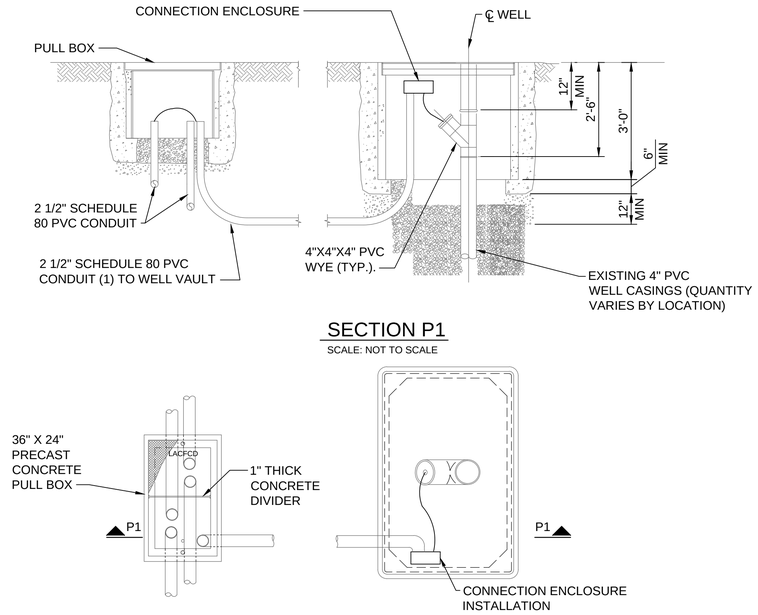

24 – TYPICAL SINGLE OBSERVATION WELL INSTALLATION
SCALE: NOT TO SCALE

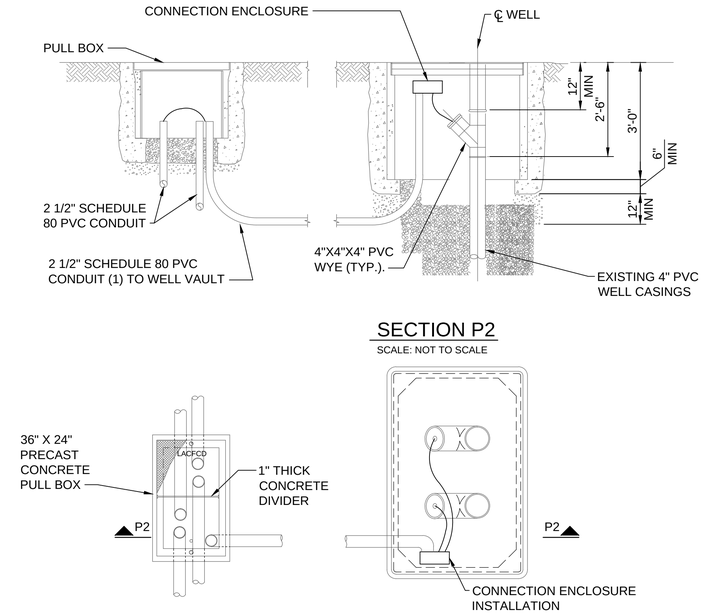

25 – TYPICAL DOUBLE OBSERVATION WELL INSTALLATION
SCALE: NOT TO SCALE

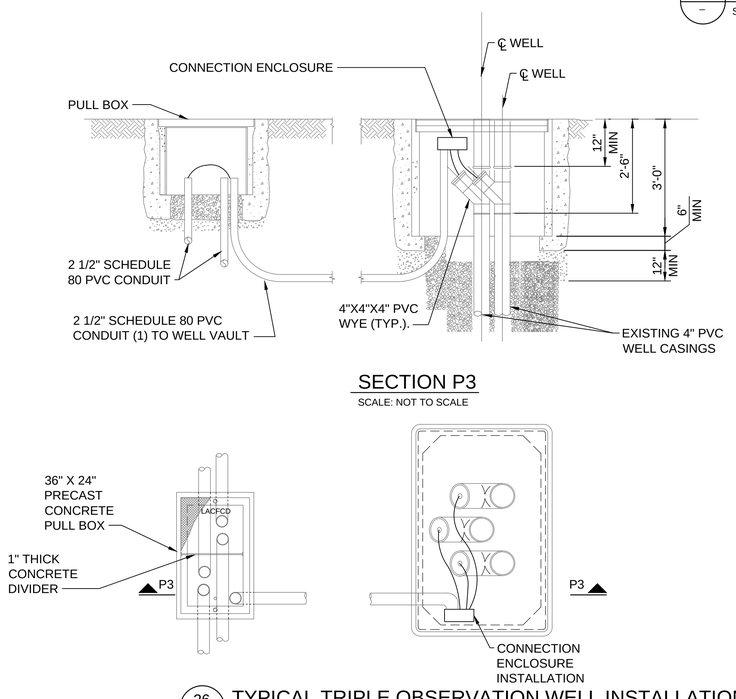

26 – TYPICAL TRIPLE OBSERVATION WELL INSTALLATION
SCALE: NOT TO SCALE

GENERAL NOTES:

1. UNLESS NOTED OTHERWISE, ALL CONDUIT, PULL BOXES AND ABOVE-GRADE ENCLOSURES WERE INSTALLED DURING CONSTRUCTION OF PHASE I AND PHASE IB. CONTRACTOR SHALL PERFORM INSTALLATION OF ALL WIRING WITHIN EXISTING PULL BOX AND CONDUIT INSTALLATIONS AND WHERE APPROVED BY PUBLIC WORKS.
2. SEE INSTRUMENT SCHEDULE FOR WELL SENSOR DEPTHS.

DRAFTER	DESIGNER	CHECKER	CADD PART NUMBER	REVIEWED BY	DATE
ALH	NH	MK			

TETRA TECH
www.tetratech.com
17885 Von Karman Avenue, Suite 500
Irvine, California 92614
Phone: 949-809-5000

DATE	BY	DESCRIPTION

REVISIONS

REGISTERED PROFESSIONAL ENGINEER JOSEPH KASTER No. E 15809 Exp. 12-31-16 ELECTRICAL STATE OF CALIFORNIA

PROJECT ENGINEER DATE

COUNTY OF LOS ANGELES DEPARTMENT OF PUBLIC WORKS

WEST COAST BASIN BARRIER PROJECT
TELEMETRY SYSTEM - PHASE II B
MISCELLANEOUS
DETAILS - 4

PROJECT ID: FCC0001280 | PCA EF11715001 | DWG 176-D153.58 | SHEET: 58 OF 63

FILE NAME: $FILE$

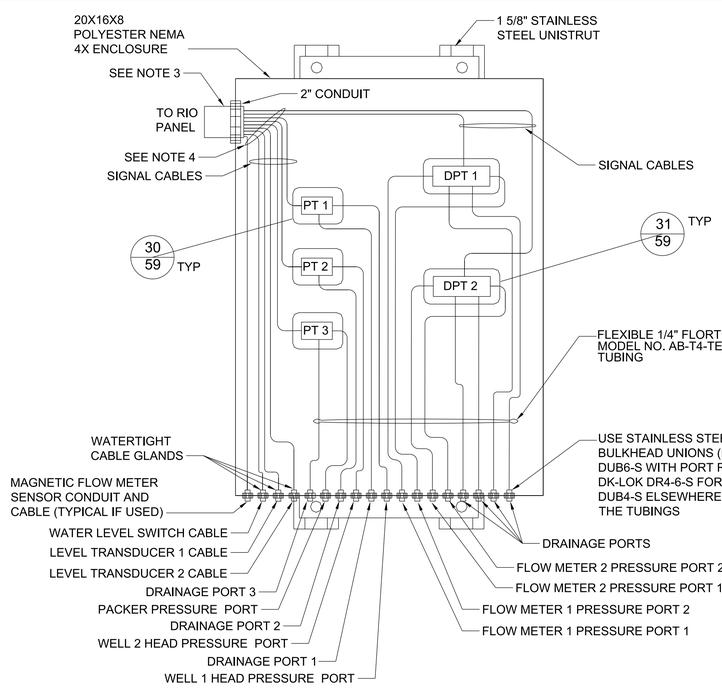

NOTES:

1. PROVIDE HAMMOND PJ20168 WITH LIFT-OFF COVER OR COUNTY APPROVED EQUAL.
2. PROVIDE PORTS AND COMPONENTS TO MATCH INSTRUMENT CONFIGURATION AT EACH LOCATION.

28 / – TYPICAL DOUBLE WELL INSTRUMENTS ENCLOSURE DETAIL

SCALE: NOT TO SCALE

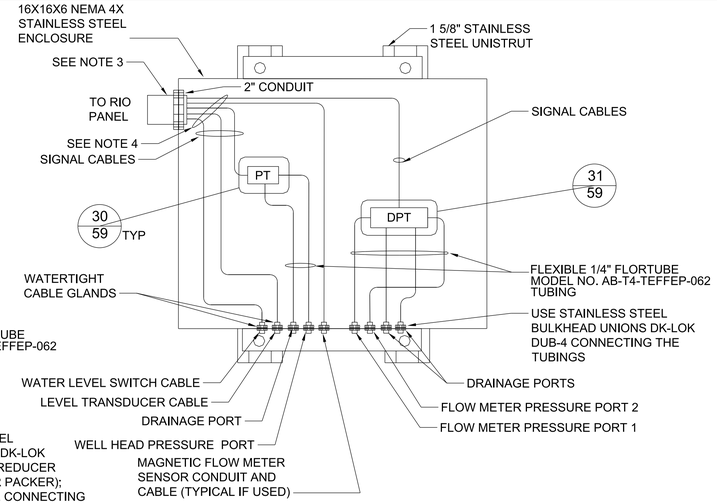

NOTES:

1. PROVIDE HAMMOND 1418N4S16G8 ENCLOSURE OR COUNTY APPROVED EQUAL.
2. PROVIDE PORTS AND COMPONENTS TO MATCH INSTRUMENT CONFIGURATION AT EACH LOCATION.

29 / – TYPICAL SINGLE WELL INSTRUMENTS ENCLOSURE DETAIL

SCALE: NOT TO SCALE

GENERAL NOTES:

1. ALL THE TUBING CONNECTORS, CABLE GLANDS, AND CONDUITS SHALL BE INSTALLED IN A MANNER THAT DOES NOT IMPAIR THE NEMA RATING OF THE ENCLOSURE
2. CONTRACTORS SHALL PROVIDE PANEL, VALVES, CONNECTORS, FITTINGS, PRESSURE TRANSMITTERS AND DIFFERENTIAL PRESSURE TRANSMITTERS.
3. PROVIDE WATER TIGHT FOAM SEALANT IN CONDUIT.
4. THE CONTRACTOR SHALL USE MOISTURE RESISTANCE GEL-FILLED COMMUNICATION CONNECTORS IN THE DOUBLE & SINGLE WELL INSTRUMENTATION ENCLOSURES IN LIEU OF DIN RAIL TERMINAL BLOCKS. COMMUNICATION CONNECTORS SHALL BE 3M SCOTCHLOK OR PUBLIC WORKS APPROVED EQUAL.

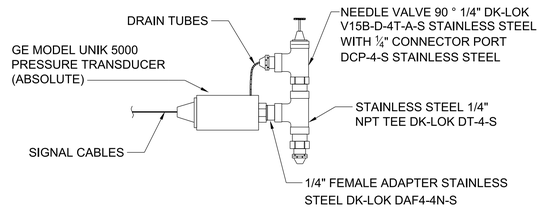

30 / – TYPICAL SINGLE ENDED PRESSURE TRANSDUCER PIPING DETAIL

SCALE: NOT TO SCALE

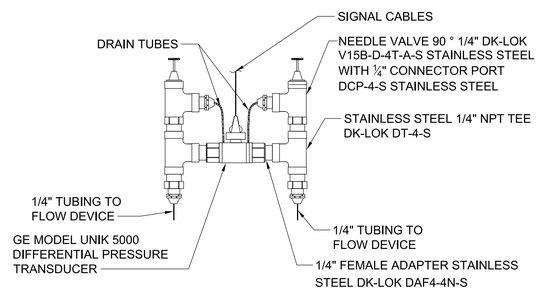

31 / – DIFFERENTIAL PRESSURE TRANSDUCER PIPING DETAIL

SCALE: NOT TO SCALE

DRAFTER	DESIGNER	CHECKER	CADD PART NUMBER	REVIEWED BY	DATE
ALH	NH	MK			

TETRA TECH
www.tetratech.com
17885 Von Karman Avenue, Suite 500
Irvine, California 92614
Phone: 949-809-5000

DATE	BY	DESCRIPTION

REVISIONS

REGISTERED PROFESSIONAL ENGINEER
BARZIN KASSAI
No. E 15809
Exp. 12-31-16
ELECTRICAL
STATE OF CALIFORNIA

PROJECT ENGINEER DATE

COUNTY OF LOS ANGELES DEPARTMENT OF PUBLIC WORKS

WEST COAST BASIN BARRIER PROJECT
TELEMETRY SYSTEM - PHASE II B
MISCELLANEOUS
DETAILS - 5

PROJECT ID: FCC0001280 | PCA EF11715001 | DWG 176-D153.59 | SHEET: 59 OF 63

FILE NAME: $FILE$

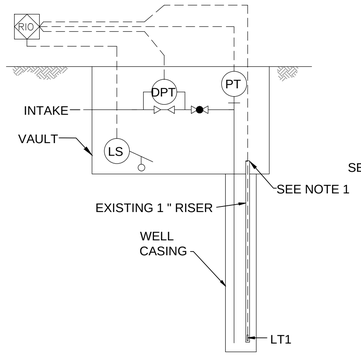

1A SINGLE INJECTION WELL (P & ID)

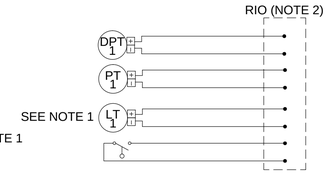

1B SINGLE INJECTION WELL WIRING SCHEMATIC

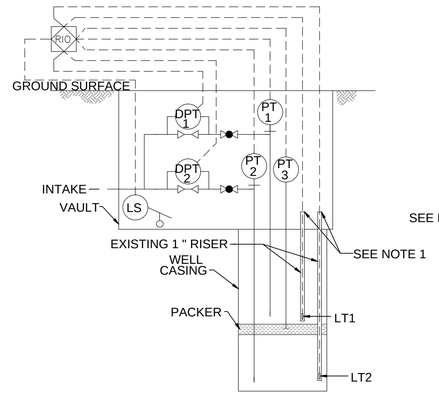

2A DOUBLE INJECTION WELL WITH PACKER (P & ID)

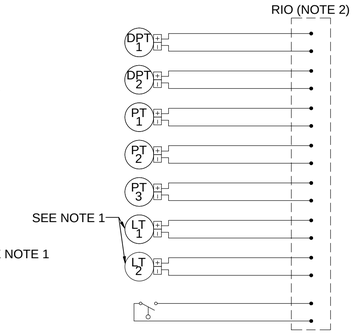

2B DOUBLE INJECTION WELL WITH PACKER WIRING SCHEMATIC

3 NOT IN USE

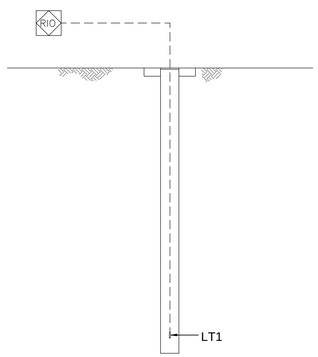

4A SINGLE OBSERVATION WELL (P & ID)

4B SINGLE OBSERVATION WELL WIRING SCHEMATIC

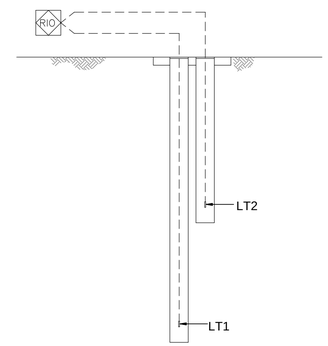

5A DOUBLE OBSERVATION WELL (P & ID)

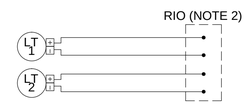

5B DOUBLE OBSERVATION WELL WIRING SCHEMATIC

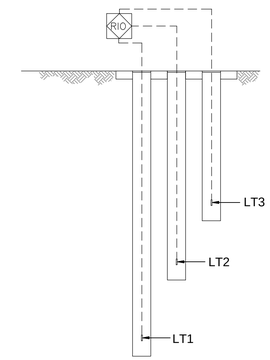

6A TRIPLE OBSERVATION WELL (P & ID)

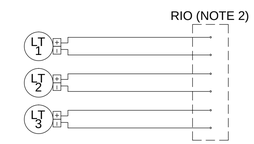

6B TRIPLE OBSERVATION WELL WIRING SCHEMATIC

LEGEND

○	FIELD MOUNTED INSTRUMENT	RIO	REMOTE I/O
▷◁	FLOW DEVICE	DPT	DIFFERENTIAL PRESSURE TRANSMITTER
▷●◁	BUTTERFLY VALVE	LS	LEVEL SWITCH (FLOAT TYPE)
		LT	LEVEL TRANSMITTER
	FLOAT SWITCH	PT	PRESSURE TRANSMITTER

GENERAL NOTES

1. FOR WELLS THAT BECOME PRESSURIZED THE RISER WILL HAVE TO BE SEALED WITH AN AIRTIGHT CABLE GLAND.
2. SEE APPROPRIATE INSTRUMENT SCHEDULE FOR CHANNEL NUMBER AND WIRE NUMBER.

DATE	BY	DESCRIPTION

REVISIONS

REGISTERED PROFESSIONAL ENGINEER
MATTHEW KASSAP
No. E 15809
Exp. 12-31-16
ELECTRICAL
STATE OF CALIFORNIA

PROJECT ENGINEER DATE

COUNTY OF LOS ANGELES DEPARTMENT OF PUBLIC WORKS

WEST COAST BASIN BARRIER PROJECT
TELEMETRY SYSTEM - PHASE II B
WELL P&ID AND
WIRING SCHEMATIC
DETAILS - 1

PROJECT ID: FCC0001280 | PCA EF11715001 | DWG 176-D153.60 | SHEET: 60 OF 63

TETRA TECH
www.tetratech.com
17885 Von Karman Avenue, Suite 500
Irvine, California 92614
Phone: 949-809-5000

DRAFTER ALH | DESIGNER NH | CHECKER MK | CADD PART NUMBER | REVIEWED BY | DATE

FILE NAME: $FILE$

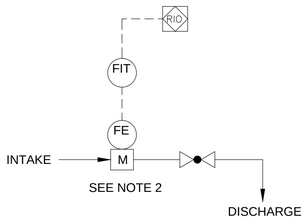

7A INJECTION WELL MAGNETIC FLOW METER (P & ID)

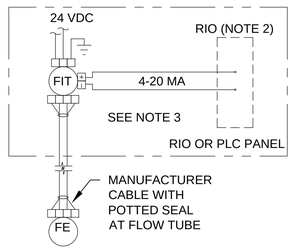

7B INJECTION WELL MAGNETIC FLOW METER WIRING SCHEMATIC

LEGEND

	FIELD MOUNTED INSTRUMENT	RIO	REMOTE I/O
	FLOW DEVICE	DPT	DIFFERENTIAL PRESSURE TRANSMITTER
	BUTTERFLY VALVE	LS	LEVEL SWITCH (FLOAT TYPE)
		LT	LEVEL TRANSMITTER
	FLOAT SWITCH	PT	PRESSURE TRANSMITTER
		FE	FLOW SENSOR
		FIT	FLOW INDICATION TRANSMITTER
		PIT	PRESSURE INDICATING TRANSMITTER

GENERAL NOTES

1. FOR WELLS THAT BECOME ARTESIAN THE RISER WILL HAVE TO BE SEALED WITH AN AIRTIGHT CABLE GLAND.
2. SEE APPROPRIATE INSTRUMENT SCHEDULE FOR CHANNEL NUMBER AND WIRE NUMBER.

REVIEWED BY	DATE

CADD PART NUMBER

CHECKER	DESIGNER	DRAFTER
MK	NH	ALH

TETRA TECH
www.tetratech.com
17885 Von Karman Avenue, Suite 500
Irvine, California 92614
Phone: 949-809-5000

DATE	BY	DESCRIPTION

REVISIONS

REGISTERED PROFESSIONAL ENGINEER
JAMEEN KASSAB
No. E 15809
Exp. 12-31-16
ELECTRICAL
STATE OF CALIFORNIA

PROJECT ENGINEER DATE

COUNTY OF LOS ANGELES DEPARTMENT OF PUBLIC WORKS

WEST COAST BASIN BARRIER PROJECT
TELEMETRY SYSTEM - PHASE II B
WELL P&ID AND
WIRING SCHEMATIC
DETAILS - 2

PROJECT ID: FCC0001280	PCA EF11715001	DWG 176-D153.61	SHEET: 61 OF 63

FILE NAME: $FILE$

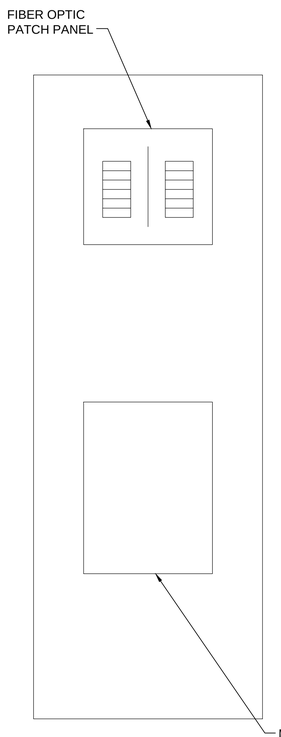

LEFT SIDE INTERIOR ELEVATION

NOT TO SCALE

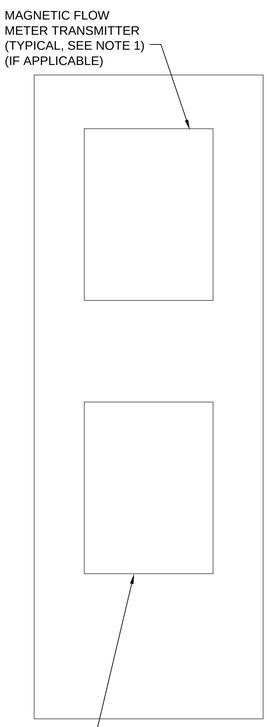

RIGHT SIDE INTERIOR ELEVATION

NOT TO SCALE

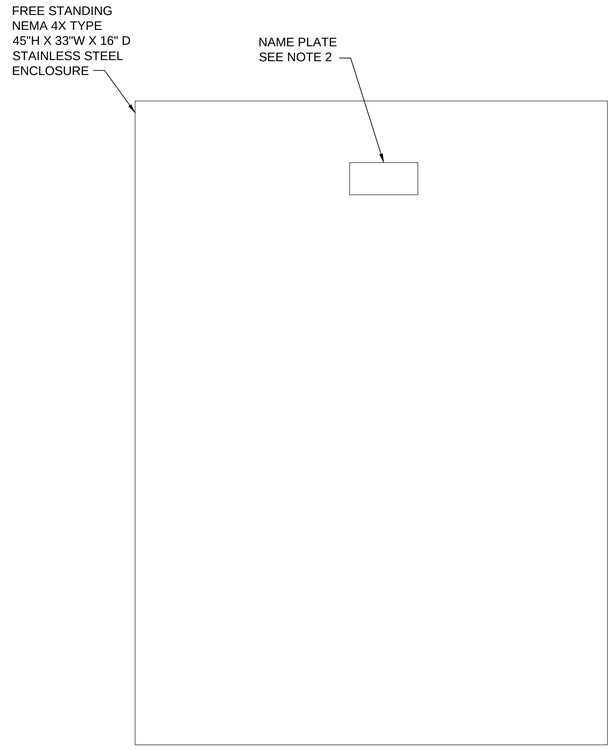

EXTERIOR ELEVATION

NOT TO SCALE

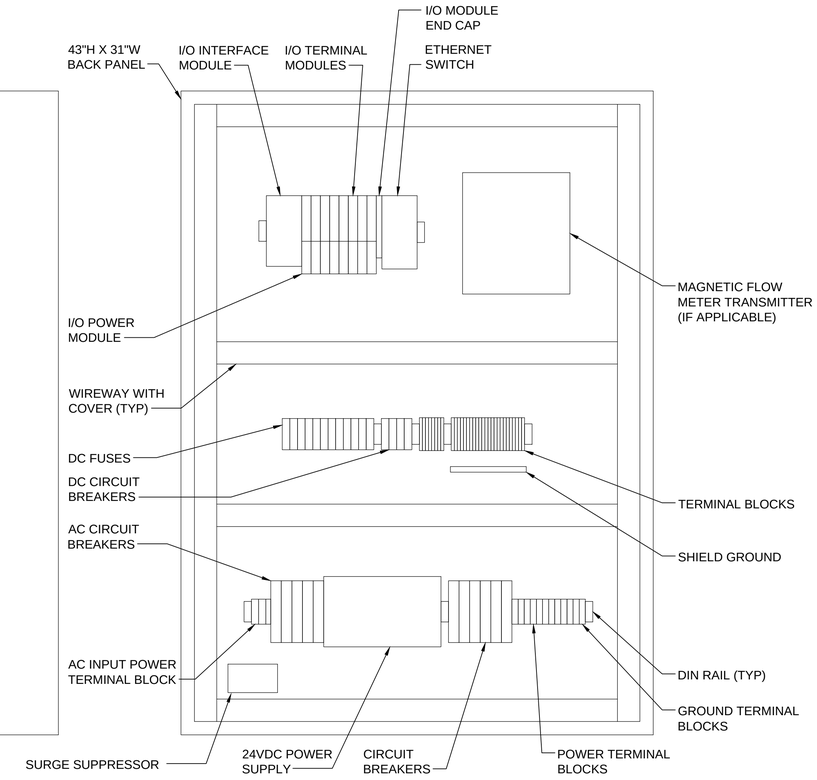

INTERIOR BACK PANEL ELEVATION

NOT TO SCALE

GENERAL NOTES

1. SEE INSTRUMENT SCHEDULE FOR MAGNETIC FLOW TRANSMITTER REQUIREMENT AT EACH PANEL (IF APPLICABLE).
2. INCLUDE CABINET LABEL TO EXTERIOR OF ENCLOSURE. SPECIFY INJECTION WELL NAME AND "RIO". LABEL SHALL BE PHENOLIC LABEL 4"X8" , BLACK BACKGROUND WITH WHITE LETTERING.

DRAFTER	DESIGNER	CHECKER	CADD PART NUMBER	REVIEWED BY	DATE
ALH	NH	MK			

TETRA TECH
www.tetratech.com
17885 Von Karman Avenue, Suite 500
Irvine, California 92614
Phone: 949-809-5000

DATE	BY	DESCRIPTION

REVISIONS

REGISTERED PROFESSIONAL ENGINEER
MATTHEW KASSAP
No. E 15809
Exp. 12-31-16
ELECTRICAL
STATE OF CALIFORNIA

PROJECT ENGINEER DATE

COUNTY OF LOS ANGELES DEPARTMENT OF PUBLIC WORKS

WEST COAST BASIN BARRIER PROJECT
TELEMETRY SYSTEM - PHASE II B
TYPICAL ABOVE GROUND
RIO PANEL ELEVATIONS

PROJECT ID: FCC0001280 | PCA EF11715001 | DWG 176-D153.62 | SHEET: 62 OF 63

FILE NAME: $FILE$

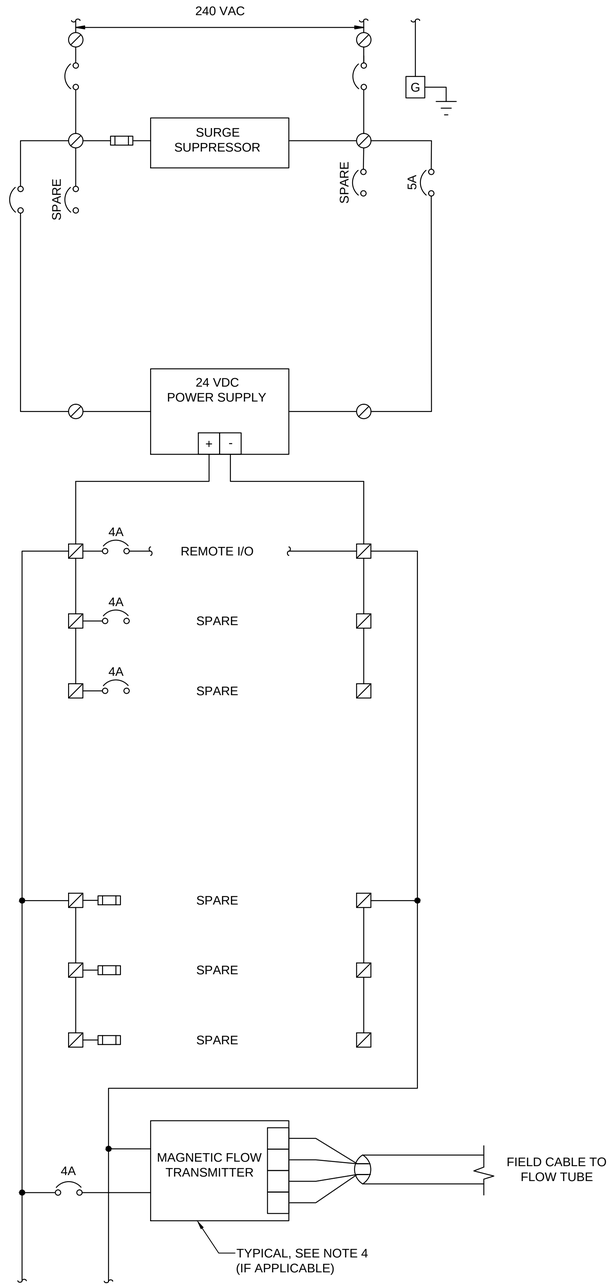

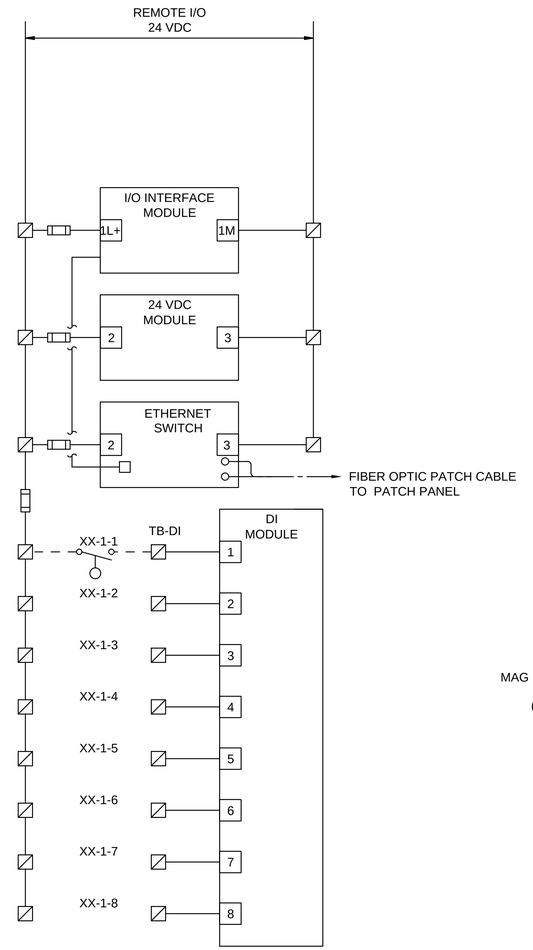

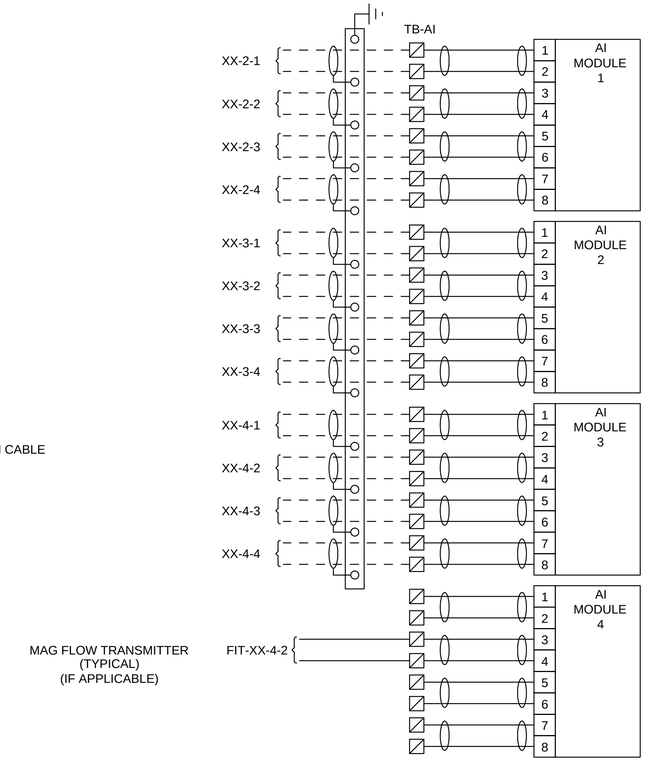

GENERAL NOTES

1. LABEL SIGNAL CONDUCTORS ACCORDING TO WELL ID, RIO MODULE, AND CHANNEL.

   XX = WELL IDENTIFIER

2. SEE INSTRUMENT SCHEDULE FOR SIGNAL REQUIREMENTS AT EACH WELL AND PANEL.

3. AI AND DI MODULES SHOWN ARE REPRESENTATIVE ONLY. PROVIDE QUANTITY AS REQUIRED.

4. SEE INSTRUMENT SCHEDULE FOR MAGNETIC FLOW METER REQUIREMENTS AT EACH WELL AND PANEL.

DATE	BY	DESCRIPTION

REVISIONS

REGISTERED PROFESSIONAL ENGINEER
JATEEN KASSEP
No. E 15809
Exp. 12-31-16
ELECTRICAL
STATE OF CALIFORNIA

PROJECT ENGINEER DATE

COUNTY OF LOS ANGELES DEPARTMENT OF PUBLIC WORKS

WEST COAST BASIN BARRIER PROJECT
TELEMETRY SYSTEM - PHASE II B
TYPICAL ABOVE GROUND
RIO PANEL SCHEMATICS

PROJECT ID: FCC0001280 | PCA EF11715001 | DWG 176-D153.63 | SHEET: 63 OF 63

TETRA TECH
www.tetratech.com
17885 Von Karman Avenue, Suite 500
Irvine, California 92614
Phone: 949-809-5000

DRAFTER ALH | DESIGNER NH | CHECKER MK | CADD PART NUMBER | REVIEWED BY | DATE

FILE NAME: $FILE$

EXHIBIT C

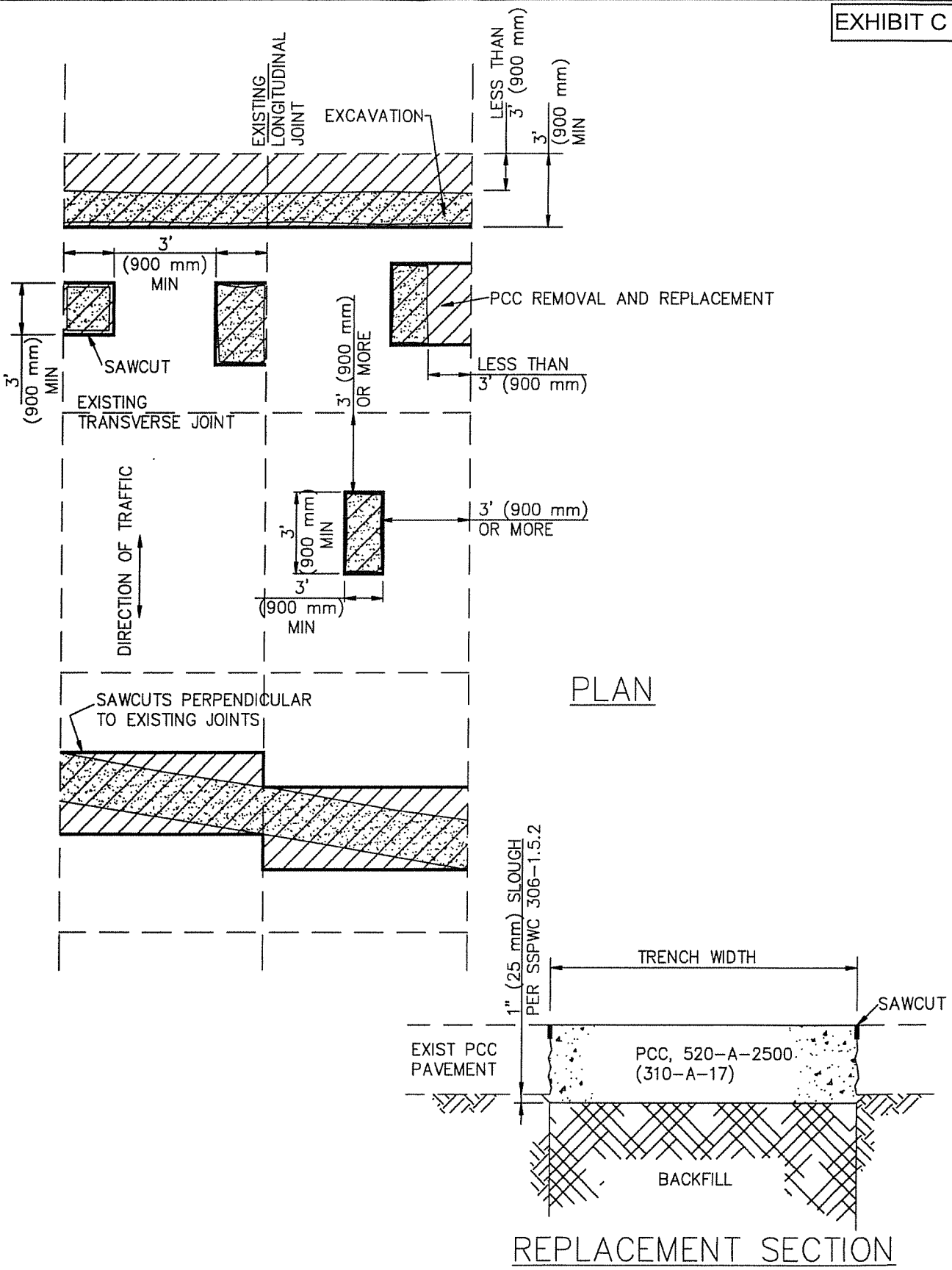

STANDARD PLANS FOR PUBLIC WORKS CONSTRUCTION

PROMULGATED BY THE PUBLIC WORKS STANDARDS INC. GREENBOOK COMMITTEE 1993 REV. 2005, 2009	**CONCRETE PAVEMENT REPLACEMENT**	STANDARD PLAN **132-3**
	USE WITH STANDARD SPECIFICATIONS FOR PUBLIC WORKS CONSTRUCTION	SHEET 1 OF 2

EXHIBIT C

NOTES:

1. THE EXTENT OF REPAIRS FOR CONCRETE CUTS NOT SHOWN ON THIS STANDARD OR CUTS MADE WITHIN 3' (900 mm) OF EXISTING PATCHES, CRACKS, OR DETERIORATED SLABS SHALL BE DETERMINED BY THE ENGINEER.
2. CONCRETE PAVEMENT SHALL BE REMOVED PER SSPWC 300–1.3.
3. BACKFILL AND DENSIFICATION SHALL CONFORM TO SSPWC 306–1.3.
4. TEMPORARY RESURFACING SHALL BE PLACED PER SSPWC 306–1.5.1.

STANDARD PLANS FOR PUBLIC WORKS CONSTRUCTION	STANDARD PLAN
CONCRETE PAVEMENT REPLACEMENT	132–3 SHEET 2 OF 2

EXHIBIT C

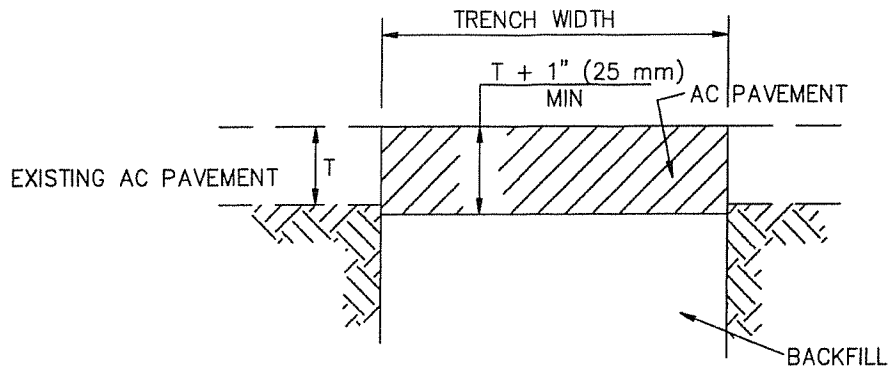

CASE I – WITHOUT BASE

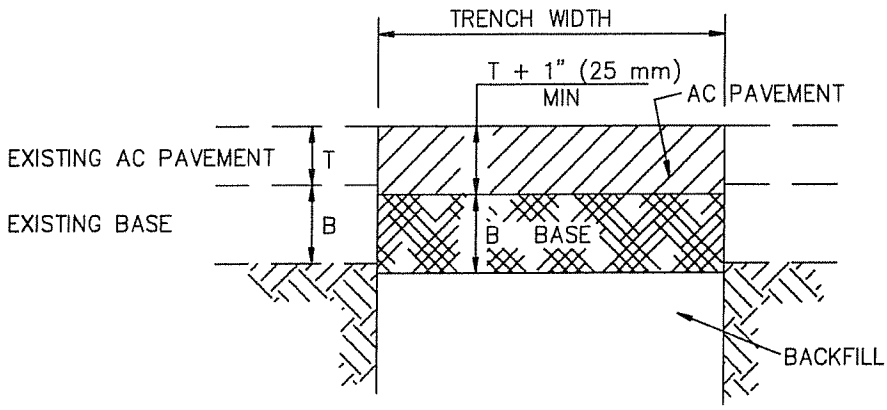

CASE II – WITH BASE

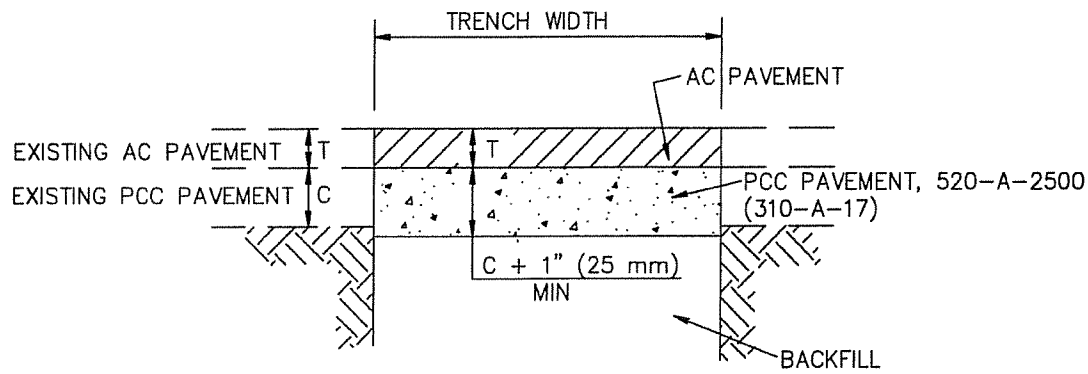

CASE III – AC PVMT ON PCC PVMT

STANDARD PLANS FOR PUBLIC WORKS CONSTRUCTION

PROMULGATED BY THE PUBLIC WORKS STANDARDS INC. GREENBOOK COMMITTEE 1993 REV. 2005, 2009

ASPHALT CONCRETE PAVEMENT REPLACEMENT

USE WITH STANDARD SPECIFICATIONS FOR PUBLIC WORKS CONSTRUCTION

STANDARD PLAN **133-3**

SHEET 1 OF 2

EXHIBIT C

NOTES:

1. BACKFILL AND DENSIFICATION SHALL CONFORM TO SSPWC 306-1.3.

3. TEMPORARY RESURFACING SHALL BE PLACED PER SSPWC 306-1.5.1.

STANDARD PLANS FOR PUBLIC WORKS CONSTRUCTION	STANDARD PLAN
ASPHALT CONCRETE PAVEMENT REPLACEMENT	133-3
	SHEET 2 OF 2

PERMIT NO. _____

CITY OF EL SEGUNDO - ENCROACHMENT PERMIT

350 MAIN STREET, EL SEGUNDO, CALIFORNIA 90245

P. C. No.: _____ ☐ CASH ☐ CHECK

Job Location:

Owner _____

Address _____

City _____ Zip _____

Phone _____

Contractor _____

Job Foreman's Name _____

Phone No. _____

Address _____

City _____ Zip _____

Phone _____ City License _____

Contractor State License No. _____

Emergency 24 Hour Phone _____

Insurance Company _____

Phone No. _____

Policy No. _____

Expiration Date _____

Workers' Comp. ☐ Yes ☐ N/A

Description of Work

1. Street Work:

- ☐ Curb & Gutter
- ☐ Sidewalk
- ☐ Driveway Approach
- ☐ Sewer Line
- ☐ Water Line
- ☐ Undergrounding
- ☐ Other_____

2. Temporary Encroachment:

- ☐ Dumpster
- ☐ Street/Lane Closure
- ☐ Storage of Materials
- ☐ Crane
- ☐ Temporary Fence
- ☐ Scaffolding
- ☐ Other_____

Comments/Conditions/Requirements

1. See Attached Conditions and Conditions on back of this page.
2. Additional Requirements:

_____

_____

_____

_____

_____

Date of Permit _____

For Inspections Call (6:30 am to 9:30 am):

- ☐ STREET . . (310) 524-2709 _____
- ☐ SEWER . . (310) 524-2742 _____
- ☐ WATER . . . (310) 524-2742 _____

- **Call a Minimum of 24 Hours in Advance.**
- **Permit and Contractor *Must* be Available at Job Site.**

Inspection Records:

Stage	Wtr.	Sewer	St.	Date	Comments	Inspector
1						
2						
3						
Final						

Fees:

1. Permit	
2. Inspection	
3. U.S.A.	
4. Water Meter	
5. Water Meter Box	
6. Security Deposit	
7.	
Total	

Refund Deposit To:

☐ Owner ☐ Contractor ☐ Other ☐ N/A

_____

_____

_____

_____

Issued By: _____

I agree to comply with the conditions on the back of this page and the attached permit conditions and with all State Laws and City Ordinances which apply to this permit.

Permittee:

Signature _____

Print Name _____

This permit is valid for up to six months from date of issue.

PERMIT CONDITIONS

Pursuant to El Segundo Municipal Code ("ESMC") §§ 9-2-1 to 9-2-10, relating to work or encroachment into public right of ways, the City of El Segundo ("CITY") grants permission to the Permittee listed above, to encroach into public property at the place specified in the permit.

1. NON-TRANSFERABLE. This Permit is not transferable or assignable. Any attempt to transfer the Permit will immediately terminate the Permit.

2. INDEMNIFICATION. Permittee indemnifies, will defend (at CITY's request and with counsel satisfactory to CITY), and holds CITY harmless from and against any claim, action, damages, costs (including without limitation, attorney's fees), injuries, or liability, arising out of Permittee's acts, errors or omissions, negligence, or wrongful conduct (regardless of CITY's passive negligence, if any) in connection with this Permit. For purposes of this section "CITY" includes the City of El Segundo's officers, officials, employees, agents, representatives, and volunteers.

3. INSURANCE.

A. At all times this permit is effective, Permittee will procure and maintain commercial general liability insurance with a coverage limit of $1,000.000.

B. Commercial general liability insurance will meet or exceed the requirements of ISO-CGL Form No. CG 00 01 11 85 or 88. The amount of insurance set forth above will be a combined single limit per occurrence for bodily injury, personal injury, and property damage for the policy coverage. Liability policies will be endorsed to name City, its officials, and employees as "additional insureds" under said insurance coverage and to state that such insurance will be deemed "primary" such that any other insurance that may be carried by City will be excess thereto. Such insurance will be on an "occurrence," not a "claims made," basis and will not be cancelable or subject to reduction except upon thirty (30) days prior written notice to City by registered or certified mail.

C. Permittee will furnish to City duly authenticated Certificates of Insurance evidencing maintenance of the insurance required under this Agreement, endorsements as required herein, and such other evidence of insurance or copies of policies as may be reasonably required by City from time to time. Insurance must be placed with insurers with a current A.M. Best Company Rating equivalent to at least a Rating of A-VII.

D. Notwithstanding any provision to the contrary, Permittee may self-insure for all or a portion of the insurance required above with respect to the limits and type of coverage.

4. ENFORCEMENT. Should CITY determine it necessary to take legal action to enforce any of the provisions of these conditions, and such legal action is taken, the Permittee will be required to pay any and all costs of such legal action, including reasonable attorney's fees, incurred by CITY, even if the matter is not prosecuted to a final judgment or is amicably resolved, unless CITY should otherwise agree with applicant to waive said fees or any part thereof. The foregoing will not apply if the Permittee prevails on every issue in the enforcement proceeding.

5. By issuing this permit, the City of El Segundo does not assume responsibility of liability for claims, damages, or injuries, of whatever nature, which may arise from this permit.

COUNTY OF LOS ANGELES
DEPARTMENT OF PUBLIC WORKS

WEST COAST BASIN BARRIER PROJECT
TELEMETRY CABINET CONSTRUCTION

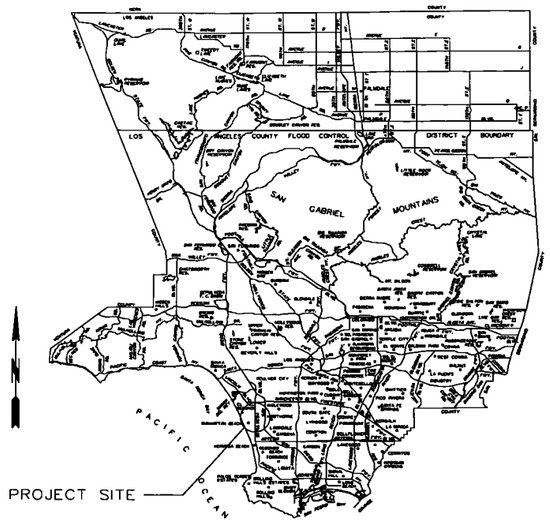

Thomas Bros. Pgs. 702. G7
732. G1

LOCATION MAP

INDEX TO PROJECT PLANS

SH. NO.	DESCRIPTION
1.	TITLE SHEET
2.	CABINET LOCATION DETAILS - WELLS 3Z AND 4C
3.	CABINET LOCATION DETAILS - WELLS 4K AND 4R
4.	DETAILS AND NOTES - CABINET AND TRENCHING

INDEX TO STANDARD PLANS

STANDARD PLANS FOR PUBLIC WORKS CONSTRUCTION (SPPWC)

STD. PLAN.	TITLE
132-3	CONCRETE PAVEMENT REPLACEMENT
133-3	ASPHALT CONCRETE PAVEMENT REPLACEMENT

UTILITIES

OIL:.....SHELL PIPELINE COMPANY, LP
WATER:.....WEST BASIN MUNICIPAL WATER DISTRICT
WATER:.....LOS ANGELES COUNTY DEPT. OF PUBLIC WORKS
WATER:.....CITY OF LOS ANGELES, DEPT. OF WATER & POWER
POWER:.....SOUTHERN CALIFORNIA EDISON
SANITARY SEWER:.....CITY OF EL SEGUNDO
NATURAL GAS:.....THE GAS COMPANY

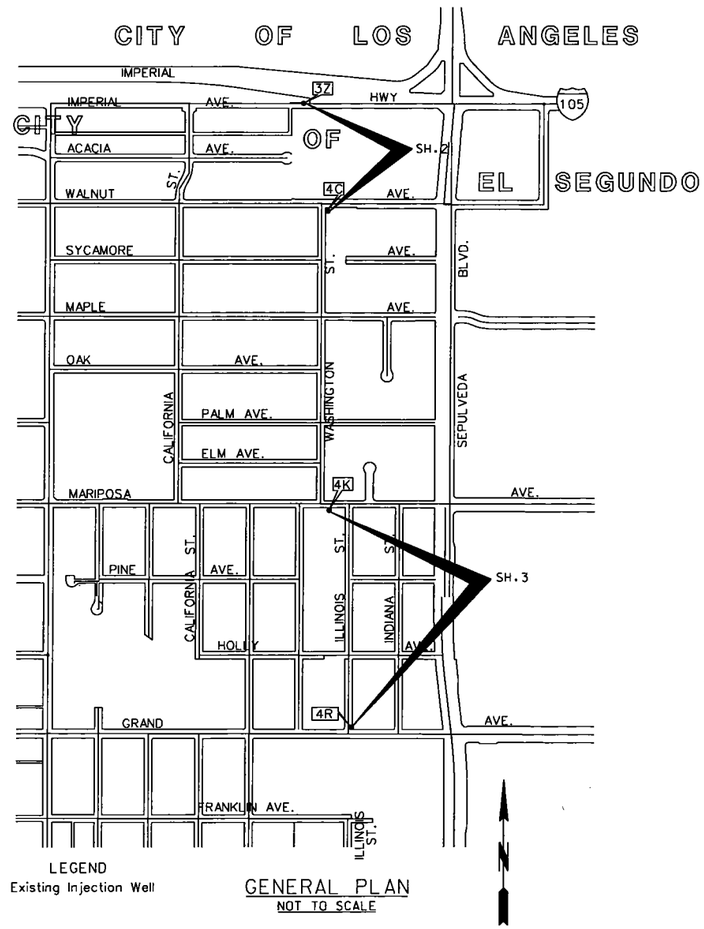

LEGEND
• Existing Injection Well

GENERAL PLAN
NOT TO SCALE

GENERAL NOTES

1. THE CONTRACTOR SHALL RESTORE THE CURB, GUTTER, PAVEMENT AND TRAFFIC STRIPING PER CA. DEPT. OF TRANSPORTATION AND CITY REQUIREMENTS.
2. THE CONTRACTOR SHALL ADJUST CONDUIT ALIGNMENT AS DIRECTED BY THE FIELD ENGINEER TO AVOID INTERFERENCE WITH EXISTING VAULTS, STRUCTURES, AND UNDERGROUND UTILITIES.
3. 2 - 2.5" and 1 - 2" SCH.80 PVC CONDUITS WILL BE INSTALLED BETWEEN THE EXISTING ADJACENT PULL BOX AND NEW CABINET. CONDUITS WILL BE OPEN TRENCHED.
4. STEEL PLATING SHALL BE PROVIDED AS IT SEEMS NECESSARY.
5. THE CONDUITS SHALL BE CONSTRUCTED SO AS TO PROVIDE THE FOLLOWING CLEARANCES TO EXISTING OR OTHER PROPOSED UNDERGROUND CONDUITS OR STRUCTURES:
   A. HORIZONTAL: 24-INCHES OUTSIDE TO OUTSIDE
   B. VERTICAL: 12-INCHES OUTSIDE TO OUTSIDE
6. ALL PAVEMENT AND OTHER EXISTING IMPROVEMENTS TO BE RECONSTRUCTED SHALL BE CONSTRUCTED AT THE SAME ELEVATION AND LOCATION AS THE EXISTING IMPROVEMENTS, UNLESS OTHERWISE NOTED.
7. THE WORK SHOWN ON THESE PLANS REQUIRES THE PRIME CONTRACTOR TO HAVE A VALID CLASS A LICENSE ISSUED BY THE STATE OF CALIFORNIA.
8. 48 HOURS PRIOR TO COMMENCEMENT OF CONSTRUCTION ACTIVITIES, THE CONTRACTOR SHALL CONTACT SHELL COMPANY TO ARRANGE FOR FIELD MARKINGS OF SHELL'S FACILITIES. THIS NOTIFICATION IS IN ADDITION TO NOTIFICATION THROUGH UNDERGROUND SERVICE ALERT.
9. CONTRACTOR'S ATTENTION IS DIRECTED TO THE EXISTENCE OF VARIOUS CROSSING UTILITIES ALONG THE PROPOSED CONDUIT ALIGNMENT. CARE SHALL BE TAKEN TO ENSURE THAT ALL UTILITIES ARE AVOIDED WITH SUFFICIENT CLEARANCE BY WAY OF AN OBSERVATION BOREHOLE OR OTHER APPROVED METHOD.
10. THE CONTRACTOR SHALL DETERMINE THE EXACT VERTICAL LOCATIONS OF ALL CROSSING UTILITIES PRIOR TO START OF CONSTRUCTION TO AVOID CONFLICT.
11. FURNISH AND INSTALL A NYLON PULL CORD INSIDE ALL CONDUIT SEGMENTS.

CADD PROJECT FILE NAME
CHECKER A. LEE
DESIGNER G. WIN
DRAFTER G. WIN

CITY OF EL SEGUNDO
APPROVED _____ 20____

TWO DAYS BEFORE YOU DIG
CALL USA TOLL FREE
1-800-227-2600

DATE	MK	DESCRIPTION

REVISIONS

REGISTERED PROFESSIONAL ENGINEER
A. LEE
NO. C 75795
EXP. 06/30/16
CIVIL
STATE OF CALIFORNIA
PROJECT ENGINEER AZ 8-26-15 DATE

COUNTY OF LOS ANGELES DEPARTMENT OF PUBLIC WORKS
WEST COAST BASIN BARRIER PROJECT
TELEMETRY CABINET CONSTRUCTION

TITLE SHEET

SHEET 1 OF 4

DATE: $DATE$ TIME: $TIME$ FILE: $FILE$

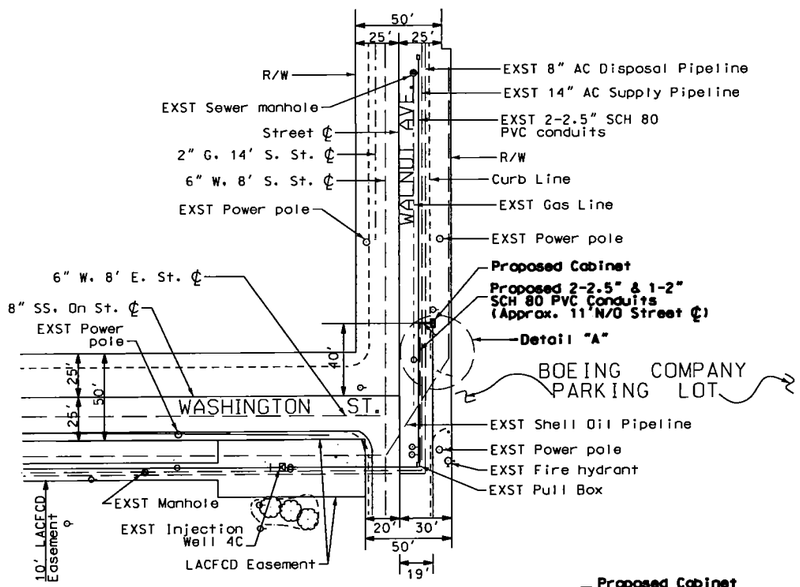

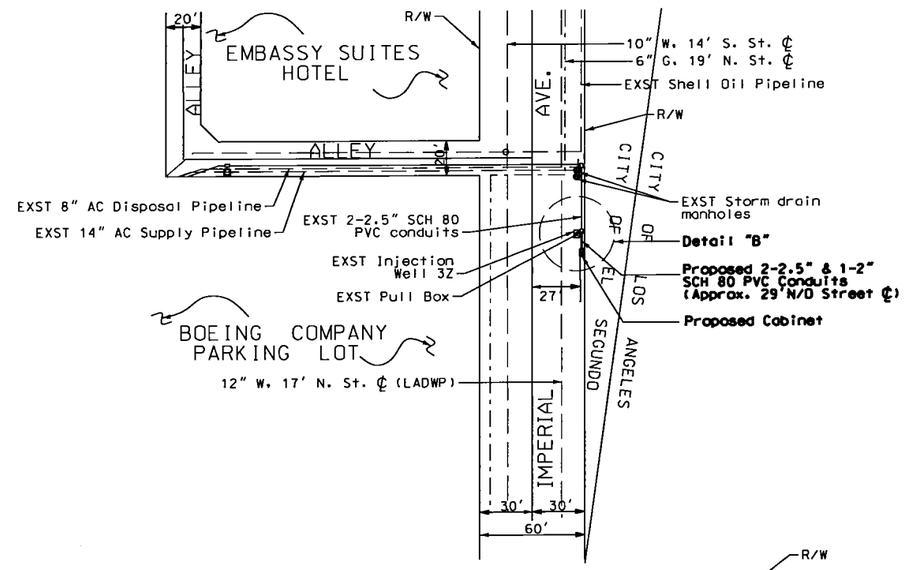

DETAIL "A"
SCALE: 1"=10'

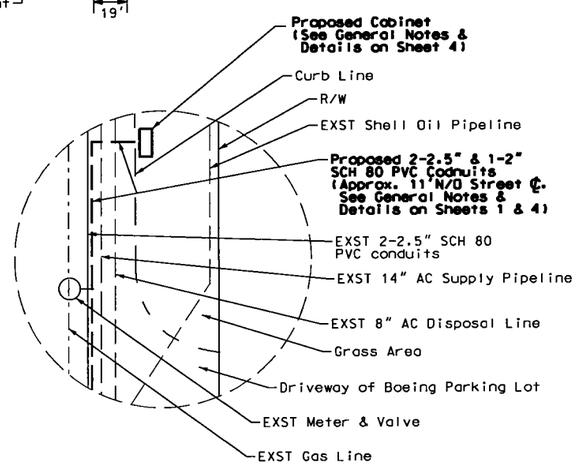

INJECTION WELL 4C

DETAIL "B"
SCALE: 1"=10'

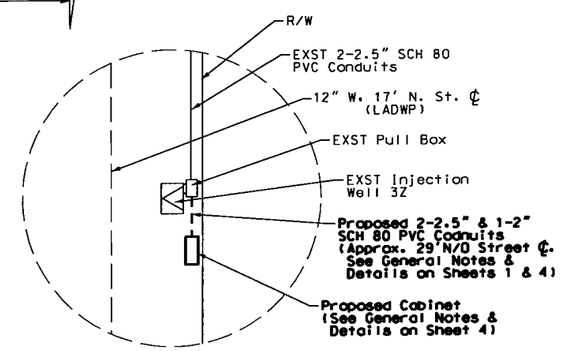

INJECTION WELL 3Z

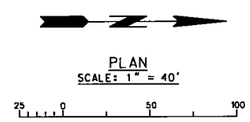

PLAN
SCALE: 1" = 40'

DATE	MK	DESCRIPTION

REVISIONS

REGISTERED PROFESSIONAL ENGINEER
A. LEE
NO. C 75795
EXP. 06/30/16
CIVIL
STATE OF CALIFORNIA

8-26-15
PROJECT ENGINEER DATE

COUNTY OF LOS ANGELES DEPARTMENT OF PUBLIC WORKS

WEST COAST BASIN BARRIER PROJECT
TELEMETRY CABINET CONSTRUCTION

CABINET LOCATION DETAILS
INJECTION WELLS 3Z AND 4C

SHEET 2 OF 4

CADD PROJECT FILE NAME
CHECKER A. LEE
DESIGNER G. WIN
DRAFTER G. WIN

DATE: $DATE$ TIME: $TIME$ FILE: $FILEL$

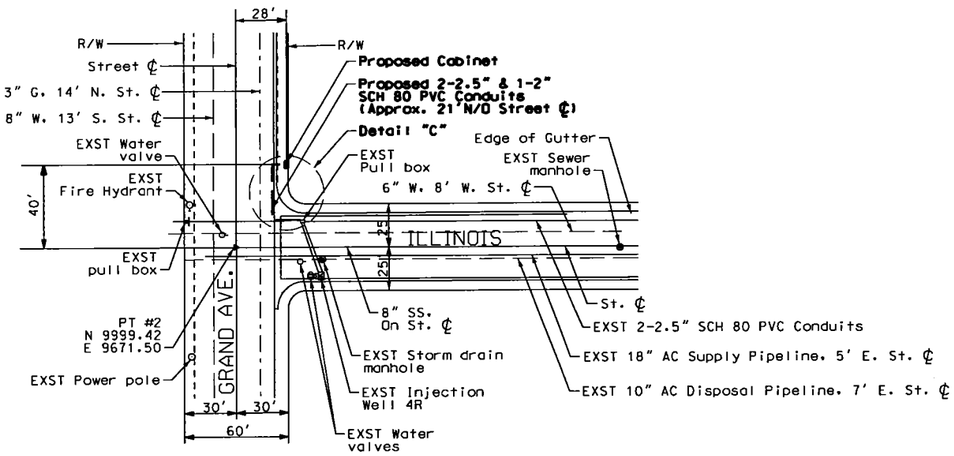

DETAIL "C"
SCALE: 1"=10'

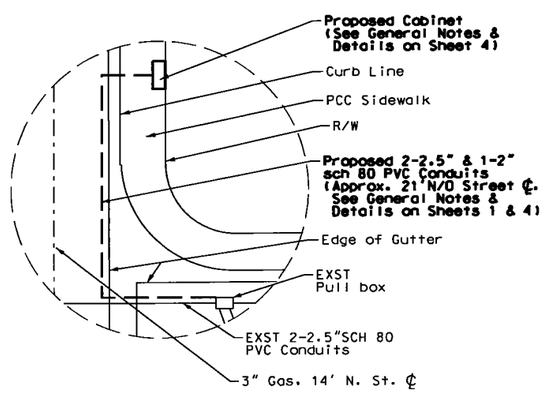

INJECTION WELL 4R

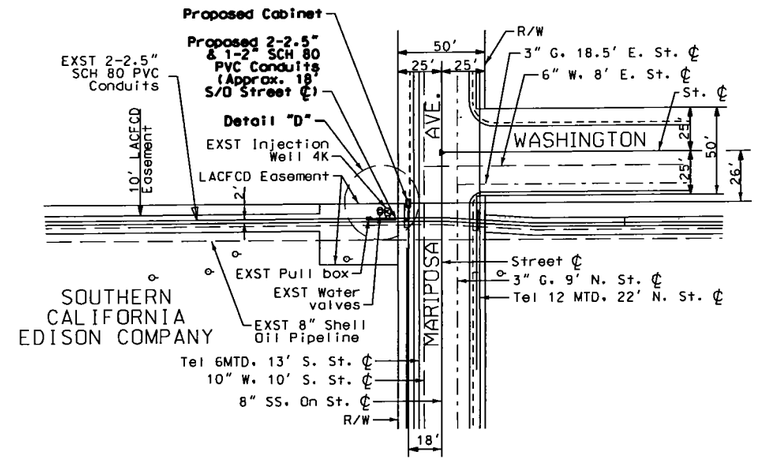

DETAIL "D"
SCALE: 1"=10'

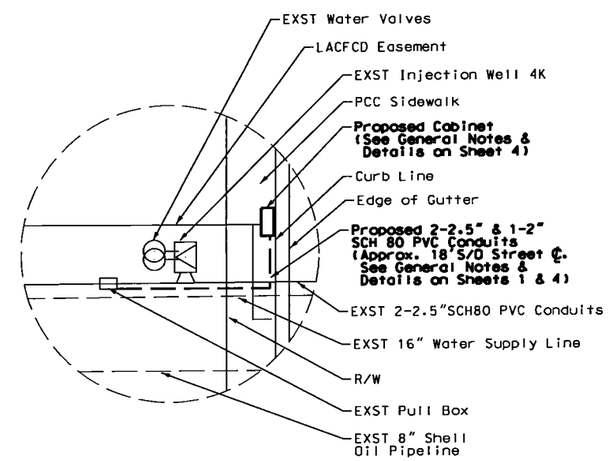

INJECTION WELL 4K

PLAN
SCALE: 1" = 40'

25 0 50 100

DRAFTER G. WIN	DESIGNER G. WIN	CHECKER A. LEE	CADD PROJECT FILE NAME

DATE	MK	DESCRIPTION

REVISIONS

REGISTERED PROFESSIONAL ENGINEER A. LEE NO. C 75795 EXP. 06/30/16 CIVIL STATE OF CALIFORNIA

PROJECT ENGINEER 8-26-15 DATE

COUNTY OF LOS ANGELES DEPARTMENT OF PUBLIC WORKS

WEST COAST BASIN BARRIER PROJECT
TELEMETRY CABINET CONSTRUCTION

CABINET LOCATION DETAILS
INJECTION WELLS 4K AND 4R

SHEET 3 OF 4

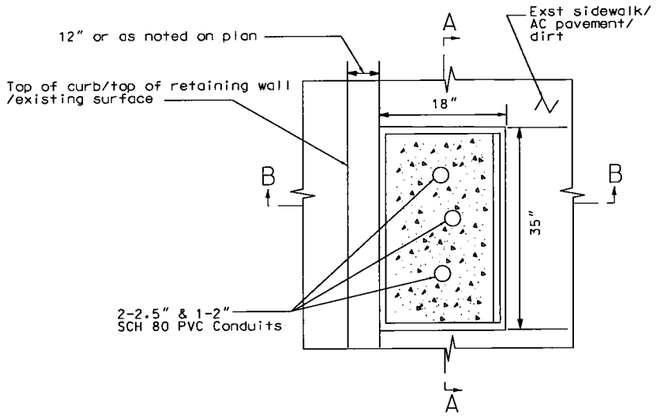

DETAIL
CABINET FOUNDATION
NOT TO SCALE

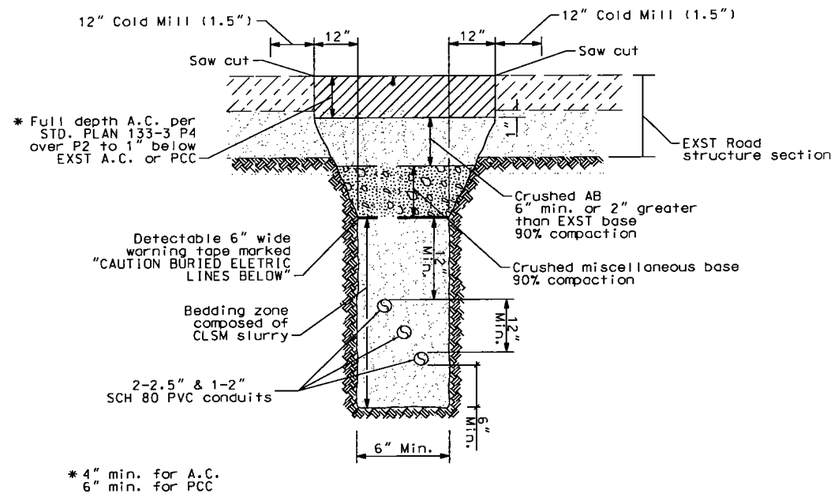

TYPICAL TELEMETRY CONDUITS
TRENCH DETAIL (PAVED AREAS)
NOT TO SCALE

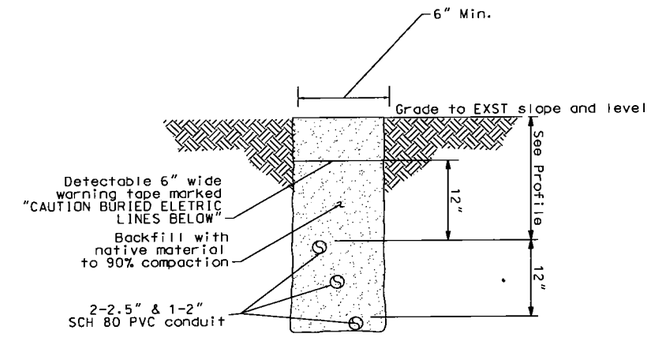

TYPICAL TELEMETRY CONDUITS
TRENCH DETAIL (UNPAVED AREAS)
NOT TO SCALE

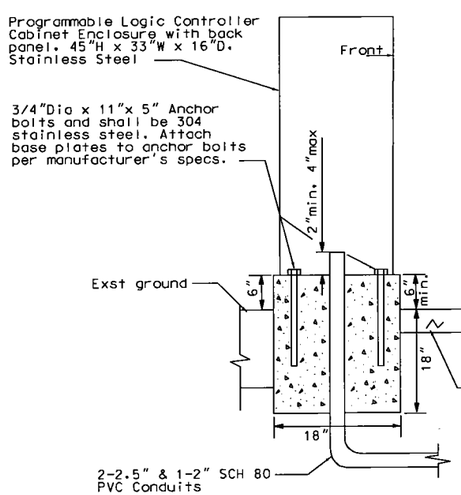

SECTION A-A
NOT TO SCALE

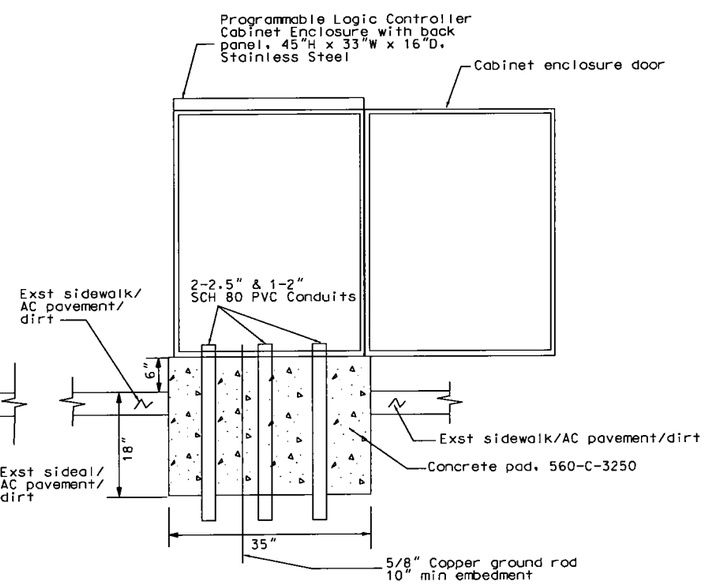

SECTION B-B
NOT TO SCALE

NOTE

1. Trenching , backfilling, compaction and resurfacing must be per City of El Segundo's details and requirements.
2. ADA compliance will be met with a minimum 4' width and required passing spaces.
3. The cabinet will be positioned to allow drivers to clearly see past the cabinet.
4. The cabinet will be installed within Public Right of Way.
5. Where cabinets are located in soil, Contractor shall backfill and compact around cabinet base to 90% relative compaction.
6. Where pavement removal is required, a 12" buffer of material must be removed surrounding the cabinet base down to one inch below the surface of the sub-base and replaced, or a minimum of 4" whichever is greater.
7. Contractor shall remove and replace concrete to the edge of any expansion joint, construction joint, weakended plane that falls within 30" of any excavation.

DATE	MK	DESCRIPTION

REVISIONS

REGISTERED PROFESSIONAL ENGINEER
A. LEE
NO. C 75795
EXP. 06/30/16
CIVIL
STATE OF CALIFORNIA

PROJECT ENGINEER 8-26-15 DATE

COUNTY OF LOS ANGELES DEPARTMENT OF PUBLIC WORKS

WEST COAST BASIN BARRIER PROJECT
TELEMETRY CABINET CONSTRUCTION

DETAILS AND NOTES

SHEET 4 OF 4

CADD PROJECT FILE NAME
CHECKER A. LEE
DESIGNER G. WIN
DRAFTER G. WIN

DATE: %DATE% TIME: %TIME% FILE: %FILEL%

City of Hermosa Beach

Public Works Department, 1315 Valley Drive, Hermosa Beach, CA 90254

PUBLIC RIGHT-OF-WAY PERMIT

PERMIT NO. PW11-0265

Status: VOID
Issued: 08/03/2011
Completed:
Expires: 01/30/2012
Issued By: HB

INSPECTION REQUIRED
PHONE 310/318-0262 FOR INSPECTION APPOINTMENT.
REQUESTS FOR INSPECTION MUST BE MADE NO LATER THAN NOON THE PRECEDING DAY INSPECTION.
MONDAY INSPECTIONS MUST BE RECEIVED BY NOON THURSDAY.

The hard copy of this permit must be kept on the job site at all times to be shown to any authorized agent of the City upon request.

ADDRESS: 1315 VALLEY DR HB
PARCEL: 4187-020-904 -
LOCATION:
DESCRIPTION: CURB & GUTTER, SIDEWALK, DRIVEWAY

OWNER: HERMOSA BEACH CITY
PHONE:
ADDRESS: 00000, ,

CONTRACTOR:
PHONE:
ADDRESS: , ,
CITY LICENSE #:
STATE LIC. #:

A. STREET EXCAVATION PERMIT		B. MISCELLANEOUS USE PERMIT		C. ENCROACHMENT PERMIT	
Curb & Gutter	Y	Street/Lane Closure	N	Fence	N
Sidewalk	Y	Material Storage/Drop-Off	N	Street Tree	N
Driveway	Y	Crane	N	Planter	N
Sewer	N	Temporary Fence	N		
Water	N	Scaffolding	N		
Utility Service Connection	N	Staging	N	D. Other:	
Street Pavement	N	Roll-Off Bin	N		
		Parking Meter	N		
Permit valid for 180 days from issuance.		**Permit valid for 14 days from issuance.**		**Permit valid for 180 days from issuance.**	

INSURANCE: On File: Y Not Required: N

Deposit to be refunded to PAYOR:
Bond deposit refund request to Finance on: by:

FEE DESCRIPTION	TRAN. CODE	AMOUNT
Work Guarantee Deposit	5015	$0.00
Parking Meter Fee	5020	$0.00
Street Excavation Fee	5090	$340.00
Sewer Lateral Fee	5095	$0.00
Utility Fee	5090	$0.00
Sewer Cap Fee	5085	$0.00
Miscellaneous Fee	5070	$0.00
TOTAL		$340.00

INSPECTIONS		
COMMENTS	DATE	BY
FINAL ACCEPTANCE AND RELEASE		

PROTECT OUR OCEAN QUALITY

Best Management Practices are required to protect water quality. No construction debris and/or pollutants are to leave the site and enter the storm drain system. This includes sediment, trash, oil, grease, concrete saw-cutting slurry, wash water from painting, stucco or concrete clean up. Violations are subject to fines and/or work stoppage (Municipal Code Sections 8.44 & 1..12.010).

Validation of this permit **SHALL NOT** be held to permit or to be an approval of the violation of any applicable provisions of the Hermosa Beach City Code and the City is held harmless from the action or accidents caused by the permittee, his employees or equipment in the performance of the work described or covered in this permit.

I hereby acknowledge that I have read this application (front and back) and that the information given is correct. I agree to comply with all applicable City Ordinances, State Laws and the requirements of this permit.

Signature of Contractor / Authorized Agent

Signature of Owner (If Owner / Builder)

SEE REVERSE FOR STANDARD REQUIREMENTS

STANDARD REQUIREMENTS

1. **NOTIFICATION REQUIREMENT:** The contractor shall notify the adjacent property owners and all affected residents of any work that will impact them. This includes all street or lane closures and any work that will generate extreme noise (i.e., demolition).
2. **WORKING HOURS:** Permitted construction is allowed to take place only between the hours of 8:00 a.m. and 7:00 p.m., Monday through Friday, and 9:00 a.m. to 5:00 p.m. on Saturdays. Permitted construction is prohibited on Sundays and national holidays.
3. All construction, unless otherwise specified, shall be done in accordance with the current edition of "Standard Specifications for Public Works Construction" and the "Highway Permit Ordinance Division 1 of Title 16."
4. Traffic may be restricted only between the hours of 9:00 a.m. to 3:00 p.m. and subject to review by the Director of Public Works. Excavations shall be backfilled or plated to maintain existing traffic lanes other than during these hours.
5. One lane of traffic in each direction shall be maintained at all times on all major and secondary highways.
6. Traffic controls throughout permitted construction shall conform to the current Edition of "Work Area Traffic Control Handbook" (WATCH); permittee shall provide and maintain all such signs, lights and devices.
7. Pedestrian walkway must be maintained with safety fencing or barrier separation from adjacent excavation when left unattended.
8. Permanent pavement repairs shall be made within thirty (30) days but no less than two weeks after excavation work is completed. Inspector's approval is required before permanent repairs are made.
9. Utility mainline projects are required to slurry seal the full street width where excavation is made in street less than five (5) years old. Permittee is responsible for replacing all traffic striping and pavement markings.
10. **BACKFILL:** The material used for backfill shall have a sand equivalent of not less than 30% as determined by tests from a qualified soils laboratory. Material encountered in excavation that will meet this requirement may be used for backfill. If excavated materials fail to meet this requirement the contractor shall use sand or crushed aggregate as backfill. If cement slurry used, no compaction tests will be required. Compaction shall be done by mechanical means. Jetting is not allowed. The maximum lift shall be 0.67' when handheld compaction equipment is used. Free falling weight compaction equipment shall not be allowed. Relative compaction required shall be 90% except for the final 0.5', which shall be 95%. Costs of the compaction test are to be borne by the permittee. The frequency of such testing will be determined by the inspector and will be sufficient to ensure that requirements have been met. Determination of frequency will be based on variables such as the nature of the material or the efficiency of the contractor's methods.
11. All graffiti must be removed within 24 hours of notification.
12. Where excavation tunnels under curb and gutter or sidewalk, or other improvements, which are to remain in place, or crosses an intersection, backfill shall be cement slurry consisting of one (1) sack of cement per cubic yard of slurry. The slurry shall be placed in a method satisfactory to the inspector to assure the elimination of any cavities.
13. Call Underground Service Alert (U.S.A.) at least forty-eight (48) hours prior to start of work: 1-800-227-2600.
14. All changes in the Scope of Work must have prior approval by the City Engineer.
15. Any excavation of five (5') feet or more in depth will require a permit from the Division of Industrial Safety (DIS) prior to obtaining a City Permit.
16. All Survey Monuments destroyed as a result of the contractor's work shall be reset "in kind" at the contractor's expense by a licensed Surveyor and recorded with the County Recorder's Office. Copies of all ties to reset monuments will be supplied to the City prior to release of work guarantee deposit.
17. Sandbags and/or other stormwater BMPs shall be installed and maintained for erosion control during October 15th through April 15th and may be required at other times.
18. All pavement trenches are to be repaired per "City of Hermosa Beach Standard Drawing No. 117, Trench Backfill and Pavement Repair."
18. All work done within the public right-of-way shall be done by a licensed contractor possessing a Class A, C-12 or C-34 License for all trenching and paving, a Class C-08 License for all concrete work, and a Class B License for minor curb, gutter and sidewalk.
19. Applicant shall maintain and keep in force at all times during construction a policy of liability insurance naming the City as additionally insured in the amount of one million dollars ($1,000,000) minimum.
20. A work guarantee deposit is required for all work done within the public right-of-way. The amount of said deposit will be determined by the Public Works Department (minimum deposit is set at $1,600). Once all improvements are in place and approved, the cash deposit will be refunded. If trenching and resurfacing in street area, deposit will be held for one year.
21. **SEWER LATERAL:** When installing a new sewer lateral, existing lateral must be plugged at the main and abandoned lateral shall be filled with cement slurry to the property line.

EXHIBIT E

WEST COAST BASIN BARRIER TELEMETRY SYSTEM PHASE IIB PRODUCT SPECIFICATIONS

The following items below are detailed product specifications for the West Coast Basin Barrier Project (WCBBP) Telemetry System Phase IIB. The Contractor shall refer to the WCBBP Telemetry System Phase IIB Scope of Work in collaboration with this exhibit.

A. TASK 4: CONDUIT, CONDUCTOR, AND WIRE INSTALLATION

PRODUCTS:

A - 1 Metal Conduit.

- Rigid Galvanized Steel Conduit: ANSI C80.1

A - 2 Liquid tight Flexible Metal Conduit.

- Description: Interlocked steel construction with PVC jacket. FS A-A-55810.

A - 3 Fittings and Conduit Bodies.

- Description: Hot dipped galvanized steel or malleable iron (Form 35). ANSI/NEMA FB1.

A - 4 Plastic Conduit and Fittings.

- Conduit Schedule 80 PVC, NEMA TC2.
- Fittings and Conduit Bodies: NEMA TC3.

A - 5 Power Conductors 600 Volts and Below.

- All conductors shall be UL listed and shall be suitable for the temperature, conditions and location where installed.
- Use only copper conductors.
- Provide conductors with Type XHHW insulation for power cables that are installed underground for any portion of their length.
- Conductors for applications of 600 volts and below shall be rated for 600 volts unless otherwise specified. Minimum wire size for power shall be #12 AWG unless otherwise specified.

- Size of branch circuit conductors shall comply with NEC 210.19.

- Equipment ground conductors shall be soft-drawn copper, not smaller than #12 AWG and as indicated or as required by NEC. Provide conductors with green insulation of the same type as all other circuit wires.

A - 6 Signal and Control Wires.

- Conductors shall be flexible stranded copper machine tool wire; UL listed Type MTW/TEW and shall be rated 600 volts. Wires for instrument signal circuits and alarm input circuits shall be #14 AWG. All other wires, including shielded cables, shall be #18 AWG minimum.

- All wiring rated above 50V shall be run in separate conduit from wiring rated below 50V.

A - 7 Fiber Optic Cables.

- Contractor shall use All-Dielectric Gel-Free single-mode cable. The cable shall be designed for outdoor uses and in duct installation.

- The fiber optic cable shall have a minimum of 12 fibers.

- Fiber Optic cables shall be manufactured by Corning ALTOS All-Dielectric Gel-Free or approved equal.

A - 8 Above Ground RIO Panels.

- Concrete pad shall be 18” by 35”, a minimum of 18” deep below ground surface, and up to 6” high above ground surface.

- Concrete utilized for concrete pad shall be type 560-C-3250.

- Cabinet enclosure shall be NEMA 4X Free Standing Type, 45” height, 33” wide, and 16” deep; stainless steel material. Enclosure shall come with back panel.

- Anchor bolts shall be ¾” diameter by 11” by 5”, stainless steel type 304.

- Ground rod shall be ⅝” copper with 10’ minimum embedment.

- Cabinet label shall specify injection well name and “RIO.” Label shall be phenolic label 4” x 8” black background with white lettering.

A - 9 Below Ground Instrument Panels.

- Dual injection well cabinet enclosures shall be NEMA 4X Type, manufactured by Hammond, model PJ20168, or Public Works approved equal. Cabinet enclosure shall be 20” height by 16” wide by 8” deep, with lift off cover, polyester material

- Single injection well cabinet enclosures shall be NEMA 4X Type, manufactured by Hammond, model 1418N4S16G6, or Public Works approved equal. Single injection well cabinet enclosures shall be 16” height, 16” wide, and 6” deep, stainless steel material.

A - 10 Below Ground Instrument Panel Accessories.

- The Contractor shall use moisture resistant, gel-filled communication connectors in the below ground instrument panels for both dual wells and single wells in lieu of DIN rail terminal blocks. Communication connectors shall be 3M Scotchlok brand or Public Works approved equal.

- Flexible tubing for connecting pressure sensor lines (exception: packer pressure line). A-Best FlorTube Flexible Tubing (1/4” OD x 1/8” ID), 400 psi; Model No. AB-T4-TEFFEP-062.

- Stainless Steel Needle valve 90°, 1/4” male for pressure sensors. Model No. DK-LOK V15B-D-4T-A-S.

- Stainless Steel port connector to connect needle valve and 1/4" tee. Model No. DK-LOK DCP-4-S.

- Stainless Steel 1/4" OD tee NPT for pressure sensors. Model No. DK-LOK DT-4-S.

- Stainless Steel 1/4" female adapter to connect pressure sensors to 1/4" tees. Model No. DK-LOK DAF4-4N-S.

- Stainless Steel Bulkhead Connectors on below ground instrument panel. Model No. DK-LOK DUB4-S.

- Flexible tubing for connecting packer pressure sensor lines. A-Best FlorTube Flexible Tubing (3/8” OD x 1/4” ID), 300 psi; Model No. AB-T6-TEFFEP-062.

- Hose protect cover for 3/8” packer pressure sensor flexible tubing. A-Best Model No. AB-T6-PROTECT 3/8” ID.

- Stainless Steel 3/8” OD tee NPT for packer pressure sensor lines. Model No. DK-LOK DT-6-S.

- Stainless Steel Bulkhead Connectors on below ground instrument panel for packer pressure sensor line. Model No. DK-LOK DUB6-S.

- Stainless Steel Port Reducer 1/4" x 3/8” for packer pressure sensor line. Model No. DK-LOK DR4-6.

- Stainless Steel Quick Connect Body for packer pressure sensor line. Model No. DK-LOK DQBB-D-6T-S.

- Stainless Steel Quick Connect Stem for packer pressure sensor line. Model No. DK-LOK DQSB-M-4N-S.

- Stainless Steel Connector 3/8” OD x 3/8” male NPT for packer pressure sensor line connection on injection well baseplate. Model No. DK-LOK DMC6-6N-S.

A - 11 Pull Boxes.

- Below grade pull boxes shall be precast Concrete vault with bolt down galvanized steel, double door type vault cover.

- Cover to be marked “LACFCD” and with the well number with 2” minimum lettering and color to blend in with surrounding.

- Pull box and cover assembly shall meet AAHSTO H20 traffic loading.

B. TASK 5: SENSOR INSTALLATION, CALIBRATION AND TESTING

PRODUCTS:

B - 1 Water Level Sensor.

General:

- Function: Measure and transmit a signal proportional to water level.
- Type: Submersible, Two-wire transmitter.
- Parts: Transmitter, sensor termination enclosure and cable.

Performance:

- Range: 0 – 150 PSIA sensor for injection wells and a 0 – 30 PSIA sensor for observation wells.
- Accuracy: 0.1% of full scale.
- Sensitivity: +/- 0.5% of reading.
- Operating Temperature: Minus 5 to plus 140 degrees F.

Service:

- Process Liquid: Water.
- Mounting: NPT, transmitter must fit in a 3/4-inch access pipe for injection wells and in a 2-inch access pipe for observation wells.
- Service: Outdoor heavy duty.
- Ingress Protection: to 2300 feet of water.

Features:

- Materials: Titanium Body and components with the ability to withstand elevated chloride levels.
- Cable length: refer to instrument schedule in Exhibit B, Plans.

Signal Interface:

- Output: 4 to 20 mA for 24V DC supply.

Manufacturers:

- PMC VL 4513 (for observation wells)
- PMC MTM 3213 (for injection wells)
- Or Public Works approved equal.

B - 2 Termination Enclosure for Water Level Sensor

General:

- Function: Termination enclosure for water level pressure transmitters. Only to be installed in observation well vaults. Water level sensors in injection well vaults can be terminated in the below ground instrument cabinet. One enclosure can house up to two water level sensors.
- The Contractor shall use moisture resistant, gel-filled communication connectors in the terminal enclosures for water level sensors in observation well vaults in lieu of DIN rail terminal blocks. Communication connectors shall be 3M Scotchlok brand or Public Works approved equal.

Manufacturer:

- PMC Dri-Box Termination Enclosure Model TE-10.
- Or Public Works approved equal.

B - 3 Injection Well Head Pressure Sensor.

General:

- Function: Measure and transmit a signal proportional to well head pressure.
- Type: Two-wire transmitter.
- Parts: Transmitter.

Performance:

- Range: 0 – 50 PSIA.
- Accuracy: 0.15% of full scale.
- Sensitivity: +/- 0.5% of reading.

- Operating Temperature: Minus 20 to plus 250 degrees F.

Service:

- Process Liquid: Water.
- Mounting: 1/4-inch NPT female.
- Service: Outdoor heavy duty.

Features:

- Materials: 316 stainless steel and components with the ability to withstand elevated chloride levels.

Signal Interface:

- Output: 4 to 20 mA for 24V d.c. supply.

Manufacturers:

- GE UNIK5000
- Or Public Works approved equal.

B - 4 Injection Well Flow Rate Sensor – Differential Pressure.

General:

- Function: Measure and transmit a signal proportional to well injection rate flow.
- Type: Two-wire transmitter.
- Parts: Transmitter.

Performance:

- Range: 0-5 PSID or greater, refer to instrument schedule on Exhibit B, Plans.
- Accuracy: +/- 1% of full scale, each side considered separately.
- Operating Temperature: Minus 20 to plus 80 degrees C.
- The tubing will be installed to form a pressure tight connection from the needle valves above and below the orifice plates.
- Minimum Line Operating Pressure: 60 PSI.

Service:

- Process Liquid: Water.
- Service: Outdoor heavy duty.

Features:

- Materials: Pressure port assembly made of 316 Stainless Steel.

Signal Interface:

- Output: 4 to 20 mA for 24V d.c. supply.

Manufacturers:

- GE UNIK5000 DP
- Or Public Works approved equal.

B - 5 Injection Well Packer Pressure Sensor.

General:

- Function: Measure and transmit a signal proportional to packer pressure.
- Type: Two-wire transmitter.
- Parts: Transmitter.

Performance:

- Range: 0 – 350 PSIA.
- Accuracy: 0.15% of full scale.
- Sensitivity: +/- 0.5% of reading.
- Operating Temperature: Minus 20 to plus 250 degrees F.

Service:

- Process fluid: Nitrogen.
- Mounting: 1/4-inch NPT female.
- Service: Outdoor heavy duty.

Features:

- Materials: 316 stainless steel and components with the ability to withstand elevated chloride levels.

Signal Interface:

- Output: 4 to 20 mA for 24V d.c. supply.

Manufacturers:

- GE UNIK5000
- Or Public Works approved equal.

B - 6 Water in Vault Level Sensor.

General:

- Function: Measure and transmit a signal to indicate water in vault.
- Type: Two-wire transmitter.
- Parts: Transmitter.

Performance:

- Rating: 150 PSIG.
- Float Specific Gravity: Maximum of 0.43.
- Operating Temperature: Minus 40 to plus 140 degrees F.

Service:

- Process Liquid: Water.
- Service: Outdoor heavy duty.
- Slosh shield to prevent faulty readings.

Excitation Voltage:

- 24V d.c. supply power.

Manufacturers:

- Gems Sensors LS-270

- Or Public Works approved equal.

C. TASK 6: TELEMETRY SYSTEM INSTALLATION AND TESTING

PRODUCTS:

C - 1 Fiber Optic Network Switch.

General:

- Function: Device used for conversion of RJ-45 signals to fiber-optic compatible signals.
- Type: RJ-45 to Fiber-optic.

Performance:

- Transmission Rates: 100 Mbps.
- Transmission Range: Up to 47,520 ft.

Features:

- Single mode.

Power Supply:

- 24V d.c. supply.

Manufacturers:

- Siemens Scalance X204-2LD.

C - 2 Remote I/O System.

- Siemens ET-200S distributed I/O Interface Module IM151-3.
- Power Module PM-E-DC24V.
- Digital electronic module 8DI-DC24V.
- Analog electronic module 4AI 2 wire ST.
- Analog electronic module 2AI U 2 wire ST for 1 – 5 VDC signals where required.
- Fiber optic switch Siemens Scalance X204-2LD.

C - 3 Surge Protectors – Field Instruments

Surge protectors shall be provided at panel external terminal blocks and according to the equipment manufacturer's instructions for instruments, which extend outdoors. Surge protectors shall be:

- For 2 wire transmitters: MTL TP48 or equal.
- For 4 wire transmitters: MTL SD Series or MTL 375/377 or equal.

C – 4 DC Power Supply (24V):

UL labeled, regulated switching power supply with the following features:

- Barrier block terminals for all wiring connections.
- Input voltage: 90-264 VAC, 47-63 Hz.
- 24 VDC output voltage with accessible adjustment for a minimum of plus or minus 2.0 volts.
- Floating output allowing either output terminal to be connected to system ground.
- Line regulation: shall not exceed plus or minus 0.5 percent for line voltage variation from 105 to 125 volts.
- Load Regulation: shall not exceed plus or minus 1.5 percent for load variation from zero to full load.
- Noise and ripple: shall not exceed 2.0 percent p-p, including switching noise.
- Minimum efficiency: 90%.
- Electronic current limiting: 105-110% of full load, with automatic recovery.
- Enclosure: Fully enclosed and suitable for mounting on DIN rail.
- Output current: Output current rating shall provide 50% spare capacity at peak load, de-rated to 50 degrees C.

Manufacturers:

- Idec series PS5R.

- Lambda series DPP or DLP.
- Sola series SFL.
- Public Works approved equal.

WCBBP Telemetry System Phase IIB

Item No.	Item	Unit of Measure	Quantity
1	Trench	LF	950
2	Pull Box	EA	1
3	PVC Conduits	LF	1,600
4	#6 AWG THWN	LF	33,000
5	#18 TSP, 1 PR	LF	25,700
6	FO Cable 12s	LF	6,000
7	Above Ground RIO Panels	EA	4
8	Below Ground Instrument Panels	EA	24
9	A-Best FlorTube AB-T4-TEFFEP-062 1/4" Tubing	LF	2,100
10	A-Best FlorTube AB-T6-TEFFEP-062 3/8" Tubing	LF	300
11	A-Best AB-T6-PROTECT Hose protect cover 3/8" ID	LF	300
12	DK-LOK V15B-D-4T-A-S; SS needle valve 90d 1/4" male	EA	124
13	DK-LOK DCP-4-S; SS port connector	EA	124
14	DK-LOK DT-4-S; SS 1/4" OD tee NPT	EA	228
15	DK-LOK DAF4-4N-S; SS 1/4" female adapter	EA	124
16	DK-LOK DUB4-S; SS Bulkhead connectors	EA	276
17	DK-LOK DT-6-S; SS 3/8" OD tee NPT	EA	13
18	DK-LOK DUB6-S; SS Bulkhead connectors	EA	13
19	DK-LOK DR4-6; SS Port reducer 1/4" x 3/8"	EA	13
20	DK-LOK DQBB-D-6T-S; SS Quick connect body 3/8" OD	EA	13
21	DK-LOK DQSB-M-4N-S; SS Quick connect stem 1/4" male NPT	EA	13
22	DK-LOK DMC6-6N-S; SS Connector 3/8" OD x 3/8" male NPT	EA	13
23	Water Level Sensors	EA	56
24	Termination Enclosure for Water Level Sensors	EA	55
25	Well Head Pressure Sensors	EA	37
26	Differential Pressure Sensors	EA	33
27	Well Packer Pressure Sensors	EA	13
28	Flood Switch	EA	24
29	RIO Back Panels	EA	4
30	ET 200S IM 151-3PN Interface Module	EA	4
31	ET 200S PM-E Power Module	EA	4
32	ET 200S TM-P15S23-A0 PM-E Terminal Module	EA	4
33	ET 200S 8DI DC24V Digital Electronic Module	EA	4
34	ET 200S TM-E15S24-01 Terminal Module	EA	4
35	ET 200S 4AI 2-Wire ST Analog Electronic Module	EA	16
36	ET 200S Terminating Module (End Cap)	EA	16
37	Scalance X204-2LD Ethernet Switch Single Mode Fiber	EA	4
38	24VDC Power Supply	EA	4
39	Terminal Block Sets	EA	4
40	RIO FO termination	EA	4
41	Surge Suppressor	EA	4
42	AC Circuit Breakers	EA	12
43	DC Circuit breakers	EA	12

EXHIBIT G

WEST COAST BASIN BARRIER TELEMETRY SYSTEM PHASE IIB MAINTENANCE & SUPPORT

I. MAINTENANCE SERVICES

The Contractor shall provide any and all services necessary to correct each deficiency occurring from time to time with respect to all or any component of the Seawater Barrier Telemetry System (SBTS), including the software, interfaces, and/or hardware (collectively, "Maintenance Services"). Without limiting the foregoing, Maintenance Services include: (a) repairing the software, interfaces, and/or hardware; (b) providing updates to the software and interfaces constituting software; and (c) replacing the hardware and interfaces constituting hardware, to the extent that Contractor has attempted to repair such hardware and interfaces, and such repair failed to restore such hardware and interfaces to the applicable requirements and specifications within the time periods required by this Exhibit. Without limiting the foregoing and in addition to the other terms of the Consultant Services Agreement, the following shall apply to the Contractor's performance of Maintenance Services:

A. When a deficiency with the SBTS is identified, the Contract Manager may submit a request for Maintenance Services to the Contractor via electronic mail (email), telephone, or any other reasonable means.

B. The Contractor shall contact the Contract Manager within twenty four (24) hours of receipt of a request for Maintenance Services to acknowledge the request.

C. Upon receiving a request for Maintenance Services from the Contract Manager, the Contractor shall provide a work plan and estimated schedule within 72 hours. After receiving written approval from the Contract Manager to proceed with the request, the Contractor shall perform the work identified in the request. After the Contractor has completed the work, the Contract Manager shall verify the deficiencies were corrected properly by visiting each respective facility, utilizing the remote capabilities of the SBTS, or both.

D. The Contractor shall provide Maintenance Services from Contractor's business premises and/or from Public Works facilities, Monday through Friday from 7 A.M. to 6 P.M. (Pacific Time) provided Contractor shall be available via email or cell phone during all other hours to respond to a request for Maintenance Services.

E. Contractor shall maintain a log of all deficiencies reported by the Contract Manager, or otherwise discovered by Contractor, together with a brief description of the resolution of such deficiency. After resolution of each deficiency, the Contractor shall provide the Contract Manager a description of the cause of the deficiency, the resolution to resolve the problem, and recommendation to avoid future occurrences.

F. The Contract Manager shall endeavor reasonably to provide Contractor with information and assistance necessary to detect, simulate, reproduce, and correct deficiencies. Regardless of the level of assistance provided by the Contract Manager, the Contractor is solely responsible for the timely correction of any deficiency.

G. The Contractor shall provide and install updates to the software and interfaces constituting software, including Siemens WinCC updates, as needed to correct any deficiencies. Any revised documentation and/or source code that corresponds to the updates shall be delivered to the Contract Manager pursuant to Task 10 (Final Acceptance, System Maintenance and Support) of the Scope of Work.

H. The Contractor shall provide Maintenance Services for any proposed Third Party Software that is deemed to be part of the software, as described on Paragraph 2 (Third-Party Software License and Warranties) of Exhibit K, regardless of whether the license to such Third Party Software is obtained through the Contractor or through an extension of an existing Public Works license with such Third Party Software provider.

I. If the Contract Manager submits a request for Maintenance Services, the Contractor shall diagnose the deficiency and determine whether it is caused by the software, interfaces, and/or hardware. The Contractor's evaluation effort shall be included in the Maintenance Services hereunder and provided without additional charge, even if the condition is ultimately determined to be caused by operating system software, hardware, or user error and not by the software, interfaces, or hardware.

J. Disagreements between Public Works and the Contractor regarding the Maintenance Services shall be resolved through the Dispute Resolution Procedures set forth in the Consultant Services Agreement.

G - 1 CONTROL CIRCUIT PIPING LEAK TEST FORM

Contract Name: _____

Contract No.:_____

Loop No.:_____

List tubing associated with loop in table below. Make applicable measurements after isolating any air consuming pilots from circuit.

Tube No.	Equivalent Length of 1/4-Inch Copper[a]	Test Period (seconds)	Permitted Pressure Drop (psi)[b]	Measured Pressure Drop (psi)
A				
B				
C				
D				
etc.				

A. Convert actual tubing and air motor volume to equivalent 1/4-inch copper tubing.

B. Pressure drop shall not exceed 1 psi per hundred feet of 1/4-inch copper tubing per 5 seconds.

CERTIFIED

_____ _____

Signature of Contractor Representative Date

WITNESSED

_____ _____

Signature of Project Representative Date

G - 2 FIELD SWITCH CALIBRATION TEST DATA FORM

Contract Name: _____

Contract No.:_____

Tag No. and Description: _____

Make and Model No.: _____ Serial No.: _____

Input: _____

Range: _____

Set Point(s): _____

Simulate process variable (flow, pressure, temperature, etc.) and set desired set point(s). Run through entire range of switch and calculate deadband.

Set Point	Increasing Input Trip Point	Decreasing Input Trip Point	Calculated Deadband	Required Deadband

CERTIFIED

_____ _____

Signature of Contractor Representative Date

WITNESSED

_____ _____

Signature of Project Representative Date

G - 3 TRANSMITTER CALIBRATION TEST DATA FORM

Contract Name: _____

Contract No.:_____

Tag No. and Description: _____

Make and Model No.: _____ Serial No.: _____

Input: _____

Output: _____

Scale: _____ Range: _____

Simulate process variable (flow, pressure, temperature, etc.) and measure output with appropriate meter.

Percent of Range	Input	Expected Output	Actual Output	% Deviation
0				
50				
100				

Percent Deviation Allowed: _____

CERTIFIED

_____ _____

Signature of Contractor Representative Date

WITNESSED

_____ _____

Signature of Project Representative Date

G - 4 MISCELLANEOUS INSTRUMENT CALIBRATION TEST DATA FORM

Contract Name: _____

Contract No.:_____

(For instruments not covered by any of the preceding test forms, the Contractor shall create a form containing all necessary information and calibration procedures.)

CERTIFIED

_____ _____

Signature of Contractor Representative Date

WITNESSED

_____ _____

Signature of Project Representative Date

G - 5 INDIVIDUAL LOOP TEST DATA FORM

Contract Name: _____

Contract No.:_____

Loop No.:

Description:
(Give complete description of loop's function using tag numbers where appropriate.)

A. Wiring tested:
(Attach test forms)

B. Instrumentation tubing/piping tested:
(Attach test forms)

C. Instruments calibrated:
(Attach test forms)

D. List step-by-step procedures for testing loop parameters. Test loop with instruments, including transmitters and control valves, connected and functioning. If it is not possible to produce a real process variable, then a simulated signal may be used with the Project Representative's approval.

CERTIFIED

_____ _____
Signature of Contractor Representative Date

WITNESSED

_____ _____
Signature of Project Representative Date

G - 6 PLC ANALOG INPUT CALIBRATION TEST FORM

ANALOG INPUT MODULE				Page 1 of 3
Panel No.: _____				
Rack No. and Slot No.: _____				
Make and Model No.: _____				
Input: _____				
Simulate input and measure output with appropriate meter.				
Percent of Range	**Input**	**Expected Register Reading**	**Actual Register Reading**	**Percent Deviation**
Input 1				
0				
50				
100				
Percent Deviation Allowed:				
Input 2				
0				
50				
100				
Percent Deviation Allowed:				
Input 3				
0				
50				
100				
Percent Deviation Allowed:				
Input 4				
0				
50				
100				
Percent Deviation Allowed:				
Input 5				
0				
50				
100				
Percent Deviation Allowed:				

CERTIFIED _____ DATE: _____

ANALOG INPUT MODULE				Page 2 of 3
Percent of Range	**Input**	**Expected Register Reading**	**Actual Register Reading**	**Percent Deviation**
Input 6				
0				
50				
100				
Percent Deviation Allowed:				
Input 7				
0				
50				
100				
Percent Deviation Allowed:				
Input 8				
0				
50				
100				
Percent Deviation Allowed:				
Input 9				
0				
50				
100				
Percent Deviation Allowed:				
Input 10				
0				
50				
100				
Percent Deviation Allowed:				
Input 11				
0				
50				
100				
Percent Deviation Allowed:				

CERTIFIED _____ DATE: _____

ANALOG INPUT MODULE				Page 3 of 3
Percent of Range	**Input**	**Expected Register Reading**	**Actual Register Reading**	**Percent Devia-tion**
Input 12				
0				
50				
100				
Percent Deviation Allowed:				
Input 13				
0				
50				
100				
Percent Deviation Allowed:				
Input 14				
0				
50				
100				
Percent Deviation Allowed:				
Input 15				
0				
50				
100				
Percent Deviation Allowed:				
Input 16				
0				
50				
100				
Percent Deviation Allowed:				
Comments: _____				

CERTIFIED _____ DATE: _____

G - 7 PLC AND RIO DISCRETE INPUT LOOP TEST FORM

Discrete Input Loop Test Data				
Tag/Device: **Serial Number:** **Description:** **Process:** **Process Range:** **Signal Range:** **Panel Input:** **RIO/PLC Input:**				
>Setpoint	Device contact	PLC data reg	Panel terminals	Deadband
<Setpoint	Device contact	PLC data reg	Panel terminals	Deadband
Hardwired functions:				
Test Method:				
Comments:				

CERTIFIED _____ DATE: _____

G - 8 PLC AND RIO ANALOG INPUT LOOP TEST FORM

Analog Input Loop Test Data					
Tag/Device: Serial Number: Description: Process: Process Range: Signal Range: Panel Input: PLC Input:					
Process Range	Process Value	Signal	PLC data expected	PLC data actual	Display data
0% 50% 100%					
Hardwired functions:					
Test Method:					
Comments:					

CERTIFIED _____ DATE: _____

EXHIBIT _

TASK/DELIVERABLE ACCEPTANCE CERTIFICATE

(Name and Address)	TRANSMITTAL DATE
TASK/DELIVERABLE ACCEPTANCE CERTIFICATE Capitalized terms used in this Task/Deliverable Acceptance Certificate without definition have the meanings given to such terms in the body of the Agreement referenced herein.	AGREEMENT NUMBER TITLE

FROM:	TO:
_____ Contractor Project Director (Signature Required)	

Contractor hereby certifies to County that as of the date of this Task/Deliverable Acceptance Certificate, it has satisfied all conditions precedent in the Agreement, including the Exhibits thereto, to the completion of the Tasks and delivery of the Deliverables set forth below, including satisfaction of the completion criteria applicable to such Tasks and Deliverables and County's approval of the Work performed in connection with the achievement of such Task. Contractor further represents and warrants that the Work performed in respect of such Tasks and Deliverables has been completed in accordance with the Agreement, including Exhibit B (Statement of Work). County's approval and signature constitutes an acceptance of the Tasks and Deliverables listed below.

TASK DESCRIPTION (including Task as set forth in the Statement of Work)	DELIVERABLES (including Deliverable numbers as set forth in the Statement of Work)

Comments:

Attached hereto is a copy of all supporting documentation required pursuant to the Agreement, including Exhibit B (Statement of Work), together with any additional documentation reasonably requested by County.

County Acceptance:

NAME _____ SIGNATURE _____ DATE _____
County Project Director

Distribution:
Original – Financial Services Copy 1 - Contractor Copy 2 - County Project Manager Copy 3 - DPW Master Contract File

County of Los Angeles
Department of Public Works
[Contractor]

EXHIBIT J

WEST COAST BASIN BARRIER TELEMETRY SYSTEM PHASE IIB
RELEVANT SOFTWARE AGREEMENT DEFINITIONS & PROVISIONS

A. DEFINITIONS

"SBTS" means generally the Seawater Barrier Telemetry System and more specifically all or any component of the Software, Interfaces, hardware, any Third Party Software, and/or services provided by or on behalf of Consultant under this AGREEMENT. Once completed and delivered by Consultant in accordance with the terms hereof, SBTS will collect, store, analyze, transmit, and graphically present status information on existing injection and groundwater conditions within the West Coast Basin Barrier Project.

"Public Works' Contract Manager" has the meaning set forth in Section B, Paragraph 1 (Public Works' Contract Manager) of this Exhibit J.

"Deficiency" means, as applicable to any work provided by or on behalf of Consultant to Public Works: any malfunction, error, or defect in the design, development, or implementation of work; any error or omission, or deviation from the requirements, specifications or mutually agreed upon industry standards, or any other malfunction or error, including the provision of negligent workmanship, which results in the SBTS, in whole or in part, not performing in accordance with the requirements and specifications, including those set forth in the Scope of Work and Exhibit G (Maintenance & Support), as determined by Public Works' Contract Manager, in Public Works' Contract Manager's sole discretion. Unless the context otherwise clearly requires, when used in this AGREEMENT, the term "deficiency" has the same meaning as the term "Deficiency".

"Final Acceptance" has the meaning set forth in Section B, Paragraph 3 (Final Acceptance of SBTS) of this Exhibit J.

"Final Acceptance Date" has the meaning set forth in Section B, Paragraph 3 (Final Acceptance of SBTS) of this Exhibit J.

"Interfaces" means the software and hardware mechanisms which allow the transfer of electronic data or software commands between computer systems, computer programs, or computer program modules from time to time provided by or on behalf of Consultant in furtherance of its obligations under this AGREEMENT, including Interfaces described in the Scope of Work and/or any Change Order or Amendment. Unless otherwise expressly noted, "Interfaces" constituting software include both object code and Source Code (as defined below) versions of such Interfaces.

"Maintenance Services" has the meaning given to such term in Exhibit G (Maintenance & Support).

"Software" means any and all software applications, programming, upgrades, updates, enhancements, revisions, new version releases, improvements, corrections, bug fixes, patches, and modifications, including Third-Party Software, from time to time conceived, created, and/or

developed by or provided to the County on behalf of Consultant in furtherance of its obligations under this AGREEMENT, including the Software described in the Scope of Work and/or any Change Order or Amendment. Unless otherwise expressly noted, "Software" includes both object code and Source Code versions of such Software.

"Source Code" means computer programming code in human readable form that is not suitable for machine execution without the intervening steps of interpretation or compilation, including the tools and developer kits that created, and enable creation of, such code.

"Third-Party Software" has the meaning set forth in Section B, Paragraph 2 (Third-Party Software License and Warranties) of this Exhibit J.

"WinCC" means the "SIMATIC WinCC Version 7.0 or newer" software program, manufactured by Siemens AG. WinCC is further described in the Scope of Work.

B. PROVISIONS

1. Public Works' Contract Manager

Public Works' Contract Manager for this AGREEMENT shall be provided at the time of contract execution. Public Works will notify Consultant, in writing, of any change in the name or address of Public Works' Contract Manager.

2. SBTS, Third-Party Software License and Warranties

In addition to all other warranties set forth in this AGREEMENT, Consultant represents, warrants, covenants, and agrees that the SBTS required to be provided by Consultant under this Agreement is sufficient in type, function, and operation, and is provided under licensing conditions, including quantity and delivery method, in full compliance with the requirements of the AGREEMENT. Consultant will take all steps necessary to achieve and deliver this guaranteed performance.

Notwithstanding Paragraph 8 of the AGREEMENT, ownership of Third-Party Software identified on Exhibit K (Third-Party Software) remains with the applicable third party manufacturer. Consultant hereby grants a perpetual and irrevocable license to use, copy, and modify the object code versions of the Third Party Software, other than the WinCC, to which Public Works already has a preexisting license. Upon the Final Acceptance Date, such license shall be a fully-paid, irrevocable and perpetual license.

Consultant hereby represents and warrants that none of the Software other than the Third-Party Software is owned by third-parties. Consultant represents and warrants that it has not modified and shall not modify, nor does Consultant have any need to modify, Third-Party Software in order for the SBTS to fully perform in accordance with the requirements and specifications. Consultant represents and warrants that all Third-Party Software is provided to Public Works in the same unmodified form as received by Consultant from the applicable third-party. Consultant represents and warrants that Third-Party Software shall, together with the remainder of the SBTS, fully satisfy all of the requirements and specifications without the need for any modification of Third-Party Software by Consultant or otherwise. Consultant represents and warrants that it has secured or will secure all applicable license rights and permission for Public Works to use

any Third-Party Software, and further represents and warrants that Public Works does not need any further license rights with respect to the Third-Party Software, including WinCC, other than the license rights described in this Paragraph 2, in order for Consultant to fully complete and deliver the SBTS as required hereunder.

Public Works acknowledges that it may have to execute certain third-party license agreements in respect of such Third-Party Software. These third-party license agreements shall be at no additional cost to Public Works. To the extent that any such third-party license agreement conflicts with this AGREEMENT or in any way restricts Public Works full use and enjoyment of the SBTS as contemplated herein, Consultant shall take all necessary action and pay all sums required for Public Works to fully enjoy all the rights and benefits in respect of the SBTS granted under this AGREEMENT. Consultant shall promptly and at no cost to Public Works, either: (a) obtain a license from the appropriate third-party, which shall enable Consultant to modify such Third-Party Software, and Consultant shall provide all necessary modifications, or (b) to the extent that Consultant is unable to obtain such a license, provide an update or alternative solution, which is functionally equivalent, in the sole determination of Public Works' Contract Manager, in lieu of modifying such Third-Party Software.

3. Final Acceptance of SBTS

Consultant shall achieve "Final Acceptance" of the SBTS upon successful completion of all the following: (a) its successful completion and delivery of Work and testing protocols under the Scope of Work associated with the Final Acceptance (b) successful implementation of all functions and features of all such Work and successful achievement of all testing protocols have been verified by Public Works; (c) Public Works' Contract Manager has provided Consultant with written approval, as evidenced by Public Works' Contract manager countersignature on all applicable Task/Deliverable Acceptance Certificates, of all such Work; and (d) all such Work has been provided, installed, and operates in Public Works' production environment with no Deficiencies for no less than 60 consecutive calendar days.

EXHIBIT K

THIRD PARTY SOFTWARE

THIS PAGE INTENTIONALLY LEFT BLANK

EXHIBIT K TO BE PROVIDED BY AWARDED CONSULTANT