COUNTY OF LOS ANGELES

DEPARTMENT OF PUBLIC WORKS

"To Enrich Lives Through Effective and Caring Service"

DEAN D. EFSTATHIOU, Acting Director

900 SOUTH FREMONT AVENUE
ALHAMBRA, CALIFORNIA 91803-1331
Telephone: (626) 458-5100
http://dpw.lacounty.gov

ADDRESS ALL CORRESPONDENCE TO:
P.O. BOX 1460
ALHAMBRA, CALIFORNIA 91802-1460

IN REPLY PLEASE
REFER TO FILE: AS-0

October 21, 2008

The Honorable Board of Supervisors
County of Los Angeles
383 Kenneth Hahn Hall of Administration
500 West Temple Street
Los Angeles, CA 90012

Dear Supervisors:

AWARD OF CONTRACT FOR THE MAINTENANCE PROGRAM FOR NONADVERTISING BUS STOP AMENITIES – SOUTH COUNTY (ALL SUPERVISORIAL DISTRICTS) (3 VOTES)

SUBJECT

This action is to award a contract for Maintenance Program for Nonadvertising Bus Stop Amenities within the unincorporated South County area.

IT IS RECOMMENDED THAT YOUR BOARD:

1. Find that the contract work is categorically exempt from the provisions of the California Environmental Quality Act.

2. Find that this service can be more economically performed by an independent contractor than by County employees.

3. Award the contract for the Maintenance Program for Nonadvertising Bus Stop Amenities – South County in the annual sum of $968,617.60, to ShelterClean, Inc., located in Sun Valley, California, and direct the Chair to execute the contract. This contract will be for a period of one year commencing on November 1, 2008, with four 1-year renewal options, not to exceed a total contract period of five years.

4. Authorize the Acting Director of Public Works or his designee to annually increase the contract amount up to an additional 25 percent of the annual contract sum for unforeseen, additional work within the scope of the contract, if required.

5. Authorize the Acting Director of Public Works or his designee to renew the contract for each additional renewal option if, in the opinion of the Acting Director of Public Works, the contractor has successfully performed during the previous contract period and the service is still required; to approve and execute amendments to incorporate necessary changes within the scope of work; and to suspend work if, in the opinion of the Acting Director of Public Works, it is in the best interest of the County to do so.

PURPOSE/JUSTIFICATION OF RECOMMENDED ACTION

The purpose of the recommended action is to award a contract for the Maintenance Program for Nonadvertising Bus Stop Amenities within the unincorporated South County area. The work to be performed will consist of routine cleaning and emptying of trash receptacles, emergency cleaning, repair and maintenance of bus stop shelters and appurtenances, bus benches, trash receptacles, solar light poles, and concrete foundations located at designated transit stops. The Department of Public Works (Public Works) has contracted for this service since 2003.

Implementation of Strategic Plan Goals

The Countywide Strategic Plan directs the provision of Service Excellence (Goal 1), Fiscal Responsibility (Goal 4), and Community Services (Goal 6). The contractor who has the specialized expertise to provide these services accurately, efficiently, timely, and in a responsive and cost-effective manner will support Public Works in meeting these goals.

FISCAL IMPACT/FINANCING

There will be no impact to the County General Fund. The contract is for an annual amount not to exceed $968,617.60 plus 25 percent for unforeseen, additional work within the scope of work of the contract. This amount is based on Public Works' estimated annual requirements for the service at the unit prices quoted by the contractor.

Financing for this service is available in each Supervisorial District's Proposition A Local Return Transit Program included in the Fiscal Year 2008-09 Transit Enterprise Fund Budget. Funds to finance the contract's option years, including any 25 percent increases for contingencies will be requested through the annual budget process.

FACTS AND PROVISIONS/LEGAL REQUIREMENTS

The contract has been executed by ShelterClean, Inc., and approved as to form by County Counsel (Attachment A). The recommended contract was solicited on an open-competitive basis and is in accordance with applicable Federal, State, and County requirements. The contractor is in compliance with the Chief Executive Officer's and your Board's requirements.

The contract contains terms and conditions supporting your Board's ordinances, policies, and programs, including but not limited to: County's Greater Avenues for Independence and General Relief Opportunities for Work Programs (GAIN and GROW), Board Policy No. 5.050; Contract Language to Assist in Placement of Displaced County Workers, Board Policy No. 5.110; Reporting of Improper Solicitations, Board Policy No. 5.060; Notice to Contract Employees of Newborn Abandonment Law (Safely Surrendered Baby Law), Board Policy No. 5.135; Contractor Employee Jury Service Program, Los Angeles County Code, Chapter 2.203; Notice to Employees Regarding the Federal Earned Income Credit (Federal Income Tax Law, Internal Revenue Service Notice 1015); Contractor Responsibility and Debarment, Los Angeles County Code, Chapter 2.202; the Los Angeles County's Child Support Compliance Program, Los Angeles County Code, Chapter 2.200; and the standard Board-directed clauses that provide for contract termination or renegotiation.

Data regarding the proposer's minority participation is on file with Public Works. The contractor was selected upon final analysis and consideration without regard to race, creed, gender, or color.

The recommended contractor is ShelterClean, Inc. This contract will commence on November 1, 2008, for a period of one year. With your Board's delegated authority, the Acting Director of Public Works or his designee may renew the contract for four 1-year renewal options, not to exceed a total contract period of five years.

Proof of the required Comprehensive General and Automobile Liability insurance policies, naming the County as additional insured, evidence of Workers' Compensation insurance, and performance guaranty will be obtained from the contractor before any work is assigned.

Pursuant to the applicable memorandum of understanding, the Request for Proposals (RFP) for this contracted service was submitted on June 12, 2008, to the appropriate union for review. The union has not asked to meet with Public Works regarding this solicitation.

This work is being contracted in accordance with procedures authorized under County Charter, Section 44.7, and Chapter 2.121 (Contracting with Private Business) of the Los Angeles County Code. The mandatory requirements for contracting set forth in Los Angeles County Code, Section 2.121.380, have been met.

Since this is a Proposition A contract, Public Works has determined that the contractor complies with the requirements of the Living Wage Program (Los Angeles County Code, Chapter 2.201) and agrees to pay its full-time employees providing County services a living wage.

Using methodology approved by the Auditor-Controller, Public Works has calculated the cost-effectiveness of contracting for this service. Based on the cost calculations, Public Works has determined that this service can be more economically performed by an independent contractor than by County employees. The Auditor-Controller has reviewed these calculations and concurs.

This Proposition A contract does not allow for a cost-of-living adjustment for the four optional years.

ENVIRONMENTAL DOCUMENTATION

This service is categorically exempt from the provisions of the California Environmental Quality Act (CEQA). This routine maintenance and repair service of nonadvertising bus stop amenities is within a class of projects that has been determined not to have a significant effect on the environment in that it meets the criteria set forth in Section 15301 of CEQA.

CONTRACTING PROCESS

On June 12, 2008, Public Works solicited proposals from 432 independent contractors and community business enterprises to accomplish this work. Also, a notice of the RFP was placed on the County's bid website (Attachment B), and an advertisement was placed in the *Los Angeles Times*.

On July 9, 2008, one proposal was received. The proposal was first reviewed to ensure it met the minimum requirements in the RFP. The proposal, having met these requirements was then evaluated by an evaluation committee consisting of Public Works staff. The committee's evaluation was based on criteria described in the RFP, which included the price, experience, work plan/staffing plan, financial stability, references, equipment, and demonstrated control over labor/payroll record keeping. Based on this evaluation, it is recommended that this contract be awarded to the responsive and responsible proposer, ShelterClean, Inc. Public Works believes the contractor's price to be reasonable for the work requested.

Public Works has accessed available resources to review and assess the proposed contractor's past performance, history of Labor Law violations, and prior performance on County contracts.

IMPACT ON CURRENT SERVICES (OR PROJECTS)

The award of this contract will not result in the displacement of any County employees as this service is presently contracted with the private sector.

CONCLUSION

Please return one adopted copy of this letter, along with the Contractor Execute and Department Conform copies, to the Department of Public Works, Administrative Services Division. The original Board Execute copy should be retained for your files.

Respectfully submitted,

DEAN D. EFSTATHIOU
Acting Director of Public Works

DDE:GZ:eh

Attachments (4)

c: Chief Executive Office (Lari Sheehan)
County Counsel
Office of Affirmative Action Compliance

ATTACHMENT A

BOARD EXECUTE

Agreement

BY AND BETWEEN

THE COUNTY OF LOS ANGELES,
DEPARTMENT OF PUBLIC WORKS

AND

SHELTERCLEAN, INC.

FOR

MAINTENANCE PROGRAM
NONADVERTISING BUS STOP AMENITIES – SOUTH COUNTY

TABLE OF CONTENTS

AGREEMENT FOR NONADVERTISING BUS STOP AMENITIES – SOUTH COUNTY

PAGE

SAMPLE AGREEMENT 1-5

EXHIBIT A Scope of Work A.1-26

EXHIBIT B Service Contract General Requirements

Section 1 Interpretation of Contract

A. Ambiguities or Discrepancies B.1

B. Definitions B.1

C. Headings B.3

Section 2 Standard Terms and Conditions Pertaining to Contract Administration

A. Amendments B.4

B. Assignment and Delegation B.4

C. Authorization Warranty B.5

D. Budget Reduction B.5

E. Complaints B.5

F. Compliance with Applicable Laws B.6

G. Compliance with Civil Rights Laws B.6

H. Confidentiality B.7

I. Conflict of Interest B.7

J. Consideration of Hiring County Employees Targeted for Layoffs or Former County Employee on Reemployment List B.7

K. Consideration of Hiring GAIN and GROW Participants B.8

L. Contractor's Acknowledgment of County's Commitment to Child Support Enforcement B.8

M. Contractor's Charitable Activities Compliance B.8

N. Contractor's Warranty of Adherence to County's Child Support Compliance Program B.9

O. County's Quality Assurance Plan B.9

P. Damage to County Facilities, Buildings, or Grounds B.9

Q. Employment Eligibility Verification B.10

R. Facsimile Representations B.10

S. Fair Labor Standards B.10

T. Governing Laws, Jurisdiction, and Venue B.11

U. Nondiscrimination and Affirmative Action B.11

V. Nonexclusivity B.12

W. No Payment for Services Provided Following Expiration/Suspension/Termination of Contract B.12

X. Notice of Delays B.12

Y. Notice of Disputes B.13

Z. Notice to Employees Regarding the Federal Earned Income Credit B.13

AA. Notices B.13

BB. Publicity B.13

CC. Public Records Act B.14
DD. Record Retention and Inspection/Audit Settlement B.14
EE. Recycled-Content Paper Products B.16
FF. Subcontracting B.16
GG. Validity B.17
HH. Waiver B.17
II. Warranty Against Contingent Fees B.17
Section 3 Terminations
A. Termination for Breach of Warranty to Maintain Compliance with County's Child Support Compliance Program B.18
B. Termination/Suspension for Convenience B.18
C. Termination/Suspension for Default B.19
D. Termination for Improper Consideration B.20
E. Termination/Suspension for Insolvency B.20
F. Termination for Nonadherence of County Lobbyists Ordinance B.21
G. Termination/Suspension for Nonappropriation of Funds B.21
Section 4 General Conditions of Contract Work
A. Authority of Public Works and Inspection B.22
B. Cooperation B.22
C. Cooperation and Collateral Work B.22
D. Equipment, Labor, Supervision, and Materials B.22
E. Gratuitous Work B.22
F. Jobsite Safety B.22
G Labor B.22
H Labor Law Compliance B.23
I. Overtime B.23
J. Permits/Licenses B.23
K. Prohibition Against Use of Child Labor B.23
L. Public Convenience B.24
M. Public Safety B.24
N. Quality of Work B.24
O. Quantities of Work B.24
P. Safety Requirements B.24
Q. Storage of Materials and Equipment B.24
R. Transportation B.25
S. Work Area Controls B.25
Section 5 Indemnification and Insurance Requirements
A. Independent Contractor Status B.26
B. Indemnification B.26
C. Workplace Safety Indemnification B.26
D. General Insurance Requirements B.27
E. Compensation for County Costs B.28
F. Insurance Coverage Requirements for Subcontractors B.28
G. Insurance Coverage Requirements B.29
Section 6 Contractor Responsibility and Debarment
A. Responsible Contractor B.31

B. Chapter 2.202 of the County Code B.31
C. Nonresponsible Contractor. B.31
D. Contractor Hearing Board. B.31
E. Subcontractors of Contractor B.32
Section 7 Compliance with County's Jury Service Program
A. Jury Service Program B.35
B. Written Employee Jury Service Policy B.35
Section 8 Safely Surrendered Baby Law Program
A. Contractor's Acknowledgment of County's Commitment to the Safely Surrendered Baby Law B.36
B. Notice to Employees Regarding the Safely Surrendered Baby Law ... B.36
Section 9 Compliance with the County's Living Wage Program
A. Living Wage Program B.36
B. Payment of Living Wage Rates B.36
C. Contractor's Submittal of Certified Monitoring Reports B.37
D. Contractor's Ongoing Obligation to Report Labor Law/Payroll Violation and Claims B.38
E. County Auditing of Contractor Records B.38
F. Notifications to Employees B.38
G. Enforcement and Remedies B.39
H. Use of Full-Time Employees B.40
I. Contractor Retaliation Prohibited B.41
J. Contractor Standards B.41
K. Neutrality in Labor Relations B.41
Section 10 Transitional Job Opportunities Preference Program B.42
Section 11 Local Small Business Enterprise (SBE) Preference Program B.43

EXHIBIT C **Internal Revenue Service Notice 1015**
EXHIBIT D **Safely Surrendered Baby Law Posters**
EXHIBIT E **Bus Stop Shelter Locations**
EXHIBIT F.1 **Bus Stop Shelter Specifications – Solar Powered**
EXHIBIT F.2 **Bus Stop Shelter Specifications – Bus Stop Bench**
EXHIBIT F.3 **Bus Stop Shelter Specifications – Trash Receptacle**
EXHIBIT F.4 **Bus Stop Shelter Specifications – Solar-Powered Light Pole - Model i-STOP™ F1/EverGEN™ Solar Engine SE-10**
EXHIBIT F.5 **Bus Stop Shelter Specifications – Solar-Powered Light Pole – Model No. 04-01-A**
EXHIBIT G **Bus Stop Shelter Diagrams**
EXHIBIT H **Proposed Cost for Bust Stop Amenities**
EXHIBIT I **Sample Fuel Adjustment Calculation: Fuel Purchased at Market Prices**

P:\aspub\CONTRACT\BEN\TRANSITSTOP NORTH & SOUTH\2008 SOUTH REBID\RFP\5 TOC-AGREEMENT-PROP A-1-3-07.DOC

AGREEMENT FOR

MAINTENANCE PROGRAM FOR NONADVERTISING BUS STOP AMENITIES – SOUTH COUNTY

THIS AGREEMENT, made and entered into this ____ day of _____, 2008, by and between the COUNTY OF LOS ANGELES, a subdivision of the State of California, a body corporate and politic (hereinafter referred to as COUNTY) and SHELTERCLEAN, INC., a Corporation (hereinafter referred to as CONTRACTOR).

WITNESSETH

FIRST: The CONTRACTOR, for the consideration hereinafter set forth and the acceptance by the Board of Supervisors of said COUNTY of the CONTRACTOR'S Proposal filed with the COUNTY on July 9, 2008, hereby agrees to provide services as described in the attached specifications for Maintenance Program for Nonadvertising Bus Stop Amenities – South County, including, but not limited to, Exhibit A, Scope of Work.

SECOND: This AGREEMENT, together with Exhibit A, Scope of Work; Exhibit B, Service Contract General Requirements; Exhibit C, Internal Revenue Service Notice 1015; Exhibit D, Safely Surrendered Baby Law Posters; Exhibit E, Bus Stop Shelter Locations; Exhibit F, Bus Stop Shelter Specifications; Exhibit G, Bus Stop Shelter Diagrams; Exhibit H, Proposed Cost for Bus Stop Amenities; Exhibit I, Sample Fuel Adjustment Calculation; Exhibit J, Bond for Faithful Performance; the CONTRACTOR'S Proposal, all attached hereto; the Request for Proposals; and Addenda to the Request for Proposals, all of which are incorporated herein by reference, are agreed by the COUNTY and the CONTRACTOR to constitute the Contract.

THIRD: The COUNTY agrees, in consideration of satisfactory performance of the foregoing services in strict accordance with the Contract specifications to the satisfaction of the Director of Public Works, to pay the CONTRACTOR pursuant to the Schedule of Prices set forth in the Proposal and attached hereto as Form PW-2, an amount not to exceed $968,617.60 per year (Maximum Contract Sum), or such greater amount as the Board may approve.

FOURTH: This Contract's initial term shall be for a period of one year commencing on November 1, 2008. At the sole discretion of the COUNTY, this Contract may be extended in increments of one year, not to exceed a total contract period of five years. The COUNTY, acting through the Director, may give a written notice of intent to extend this Contract at least 30 days prior to the end of each term.

FIFTH: The CONTRACTOR shall bill monthly in arrears, for the work performed during the preceding month. Work performed shall be billed at the unit prices quoted in Form PW-2, Schedule of Prices.

SIXTH: Public Works will make payment to the CONTRACTOR within 30 days of receipt and approval of a properly completed invoice. However, should the CONTRACTOR be certified by the COUNTY as a Local Small Business Enterprise, payment will be made in accordance with Board of Supervisors Policy No. 3.035, Small Business Liaison and Prompt

Payment Program. Each invoice shall be in triplicate (original and two copies) and shall itemize the work completed. The invoices shall be submitted to:

County of Los Angeles Department of Public Works
Attention Fiscal Division, Accounts Payable
P.O. Box 7508
Alhambra, CA 91802-7508

SEVENTH: In no event shall the aggregate total amount of compensation paid to the CONTRACTOR exceed the amount of compensation authorized by the Board. Such aggregate total amount is the Maximum Contract Sum.

EIGHTH: The CONTRACTOR understands and agrees that only the designated Public Works Contract Manager is authorized to request or order work under this Contract. The CONTRACTOR acknowledges that the designated Contract Manager is not authorized to request or order any work that would result in the CONTRACTOR earning an aggregate compensation in excess of this Contract's Maximum Contract Sum.

NINTH: The CONTRACTOR shall not perform or accept work requests from the Contract Manager or any other person that will cause the Maximum Contract Sum of this Contract to be exceeded. CONTRACTOR shall monitor the balance of this Contract's Maximum Contract Sum. When the total of the CONTRACTOR'S paid invoices, invoices pending payment, invoices yet to be submitted, and ordered services reaches 75 percent of the Maximum Contract Sum, the CONTRACTOR shall immediately notify the Contract Manager in writing. The CONTRACTOR shall send written notification to the Contract Manager when this Contract is within six months from expiration of the term as provided for hereinabove.

TENTH: No cost-of-living adjustments shall be granted for the optional renewal periods.

ELEVENTH: In the event that terms and conditions, which may be listed in the CONTRACTOR'S Proposal, conflict with the COUNTY'S specifications, requirements, and terms and conditions as reflected in this AGREEMENT, including, but not limited to, Exhibits A through J, inclusive, the COUNTY'S provisions shall control and be binding.

TWELFTH: The CONTRACTOR agrees in strict accordance with the Contract specifications and conditions to meet the COUNTY'S requirements.

THIRTEENTH: A faithful performance bond in substantially the form attached as the Exhibit J, is required in a sum not less than 50% of the total annual Contract amount, payable to the COUNTY, executed by a corporate surety admitted to transact business as a surety insurer in the State of California (or by the surety's agent with a notarized copy of power of attorney). The admitted surety and its agent shall have sufficient bonding limitations to provide bonds in the amount required by this Contract. The bond shall be conditioned upon faithful performance of the terms and conditions of this Contract by CONTRACTOR in a manner that is satisfactory and acceptable to the COUNTY. If necessary, the bond shall be renewed in a timely manner to provide for continuing liability in the above amount notwithstanding any payment or recovery thereon. Subject to

COUNTY conditions and approval, a Certificate of Deposit or an irrevocable Letter of Credit payable to the COUNTY upon demand and in a sum not less than 50% of the total annual Contract amount may be acceptable. Failure to Maintain Coverage - Failure by the CONTRACTOR to maintain the required security shall constitute a material breach of contract upon which the COUNTY may immediately terminate or suspend this Contract.

The CONTRACTOR shall pay all security premiums, costs, and incidentals.

FOURTEENTH: This Contract constitutes the entire agreement between the COUNTY and the CONTRACTOR with respect to the subject matter of this Contract and supersedes all prior and contemporaneous agreements and understandings.

//
//
//
//
//
//
//
//
//
//
//
//
//
//
//
//
//
//
//
//
//
//
//
//
//
//
//
//
//
//
//
//
//
//
//
//
//
//
//
//
//
//
//
//
//
//

IN WITNESS WHEREOF, the COUNTY has, by order of its Board of Supervisors, caused these presents to be subscribed by the Chair of said Board and the seal of said Board to be affixed and attested by the Clerk thereof, and the CONTRACTOR has subscribed its name by and through its duly authorized officers, as of the day, month, and year first written above.

COUNTY OF LOS ANGELES

By_____
Chair, Board of Supervisors

ATTEST:

SACHI A. HAMAI
Executive Officer of the
Board of Supervisors of
the County of Los Angeles

By _____
Deputy

APPROVED AS TO FORM:

RAYMOND G. FORTNER, JR.
County Counsel

By Carole B. Suzuki
Deputy

SHELTERCLEAN, INC.

By Jerome Cooper
Its President

JEROME COOPER
Type or Print Name

By
ASST. Secretary

DENNIS S. CONNOR
Type or Print Name

P:\aspub\CONTRACT\BEN\TRANSITSTOP NORTH & SOUTH\2008 SOUTH REBID\FINAL AGREEMENT\AGREEMENT.doc

CALIFORNIA ALL-PURPOSE CERTIFICATE OF ACKNOWLEDGMENT

State of NEW YORK

County of NASSAU

On SEPTEMBER 5.2008 before me, JEROME COOPER, PRESIDENT,
(Here insert name and title of the officer)

personally appeared JEROME COOPER,

who proved to me on the basis of satisfactory evidence to be the person(s) whose name(s) is/are subscribed to the within instrument and acknowledged to me that he/she/they executed the same in his/her/their authorized capacity(ies), and that by his/her/their signature(s) on the instrument the person(s), or the entity upon behalf of which the person(s) acted, executed the instrument.

I certify under PENALTY OF PERJURY under the laws of the State of California that the foregoing paragraph is true and correct.

WITNESS my hand and official ~~seal~~.

Donna M. Pirillo
Signature of Notary Public

(Notary Seal)
DONNA M. PIRILLO
Notary Public, State of New York
No. 01PI4669275
Qualified in Nassau County
Commission Expires May 31, 2010

ADDITIONAL OPTIONAL INFORMATION

DESCRIPTION OF THE ATTACHED DOCUMENT

Maintenance Program For NonAdvertising
(Title or description of attached document)

BUS AMENITIES - SOUTH COUNTY
(Title or description of attached document continued)

Number of Pages _____ Document Date _____

_____
(Additional information)

CAPACITY CLAIMED BY THE SIGNER

- ☐ Individual (s)
- ☒ Corporate Officer
  PRESIDENT
  (Title)
- ☐ Partner(s)
- ☐ Attorney-in-Fact
- ☐ Trustee(s)
- ☐ Other _____

INSTRUCTIONS FOR COMPLETING THIS FORM

Any acknowledgment completed in California must contain verbiage exactly as appears above in the notary section or a separate acknowledgment form must be properly completed and attached to that document. The only exception is if a document is to be recorded outside of California. In such instances, any alternative acknowledgment verbiage as may be printed on such a document so long as the verbiage does not require the notary to do something that is illegal for a notary in California (i.e. certifying the authorized capacity of the signer). Please check the document carefully for proper notarial wording and attach this form if required.

- State and County information must be the State and County where the document signer(s) personally appeared before the notary public for acknowledgment.
- Date of notarization must be the date that the signer(s) personally appeared which must also be the same date the acknowledgment is completed.
- The notary public must print his or her name as it appears within his or her commission followed by a comma and then your title (notary public).
- Print the name(s) of document signer(s) who personally appear at the time of notarization.
- Indicate the correct singular or plural forms by crossing off incorrect forms (i.e. ~~he~~/she/~~they,~~ is /~~are~~) or circling the correct forms. Failure to correctly indicate this information may lead to rejection of document recording.
- The notary seal impression must be clear and photographically reproducible. Impression must not cover text or lines. If seal impression smudges, re-seal if a sufficient area permits, otherwise complete a different acknowledgment form.
- Signature of the notary public must match the signature on file with the office of the county clerk.
  - Additional information is not required but could help to ensure this acknowledgment is not misused or attached to a different document.
  - Indicate title or type of attached document, number of pages and date.
  - Indicate the capacity claimed by the signer. If the claimed capacity is a corporate officer, indicate the title (i.e. CEO, CFO, Secretary).
- Securely attach this document to the signed document

CALIFORNIA ALL-PURPOSE CERTIFICATE OF ACKNOWLEDGMENT

State of NEW YORK

County of NASSAU

On SEPTEMBER 5, 2008 before me, DENNIS S. CONNOR, ASSISTANT SECRETARY
(Here insert name and title of the officer)

personally appeared DENNIS S. CONNOR,

who proved to me on the basis of satisfactory evidence to be the person(s) whose name(s) is/are subscribed to the within instrument and acknowledged to me that he/she/they executed the same in his/her/their authorized capacity(ies), and that by his/her/their signature(s) on the instrument the person(s), or the entity upon behalf of which the person(s) acted, executed the instrument.

I certify under PENALTY OF PERJURY under the laws of the State of California that the foregoing paragraph is true and correct.

WITNESS my hand and official seal.

Donna M. Pirillo
Signature of Notary Public

(Notary Seal)

DONNA M. PIRILLO
Notary Public, State of New York
No. 01PI4669275
Qualified in Nassau County
Commission Expires May 31, 2010

ADDITIONAL OPTIONAL INFORMATION

DESCRIPTION OF THE ATTACHED DOCUMENT

Maintenance Program For Nonadvertising
(Title or description of attached document)

BUS AMENITIES - SOUTH COUNTY
(Title or description of attached document continued)

Number of Pages _____ Document Date _____

(Additional information)

CAPACITY CLAIMED BY THE SIGNER

- ☐ Individual (s)
- ☒ Corporate Officer
  ASST. SECRETARY
  (Title)
- ☐ Partner(s)
- ☐ Attorney-in-Fact
- ☐ Trustee(s)
- ☐ Other _____

INSTRUCTIONS FOR COMPLETING THIS FORM

Any acknowledgment completed in California must contain verbiage exactly as appears above in the notary section or a separate acknowledgment form must be properly completed and attached to that document. The only exception is if a document is to be recorded outside of California. In such instances, any alternative acknowledgment verbiage as may be printed on such a document so long as the verbiage does not require the notary to do something that is illegal for a notary in California (i.e. certifying the authorized capacity of the signer). Please check the document carefully for proper notarial wording and attach this form if required.

- State and County information must be the State and County where the document signer(s) personally appeared before the notary public for acknowledgment.
- Date of notarization must be the date that the signer(s) personally appeared which must also be the same date the acknowledgment is completed.
- The notary public must print his or her name as it appears within his or her commission followed by a comma and then your title (notary public).
- Print the name(s) of document signer(s) who personally appear at the time of notarization.
- Indicate the correct singular or plural forms by crossing off incorrect forms (i.e. ~~he~~/she/~~they,~~ is /~~are~~) or circling the correct forms. Failure to correctly indicate this information may lead to rejection of document recording.
- The notary seal impression must be clear and photographically reproducible. Impression must not cover text or lines. If seal impression smudges, re-seal if a sufficient area permits, otherwise complete a different acknowledgment form.
- Signature of the notary public must match the signature on file with the office of the county clerk.
  - Additional information is not required but could help to ensure this acknowledgment is not misused or attached to a different document.
  - Indicate title or type of attached document, number of pages and date.
  - Indicate the capacity claimed by the signer. If the claimed capacity is a corporate officer, indicate the title (i.e. CEO, CFO, Secretary).
- Securely attach this document to the signed document

SCOPE OF WORK

MAINTENANCE PROGRAM FOR NONADVERTISING BUS STOP AMENITIES – SOUTH COUNTY

A. Public Works Contract Manager

Public Works Contract Manager will be Mr. William Yan of Programs Development Division, who may be contacted at (626) 458-3961, e-mail address: wyan@dpw.lacounty.gov, Monday through Thursday, 7:30 a.m. to 5:45 p.m. The Contract Manager is the only person authorized by Public Works to request work of the Contractor; however, the Contract Manager may delegate this task to staff and will notify the Contractor when doing so. From time to time, Public Works may change the Contract Manager. The Contractor will be notified in writing when there is a change in Contract Manager. In the event of an emergency after normal business hours, staff can be reached at (888) 524-6287.

B. Work Location

Services shall be performed at designated bus stop shelters and transit stops in the unincorporated areas of the County as specified in Exhibit E.

The County reserves the right to add or remove locations and to increase or reduce the service within this area anytime during the entire term of this Contract.

C. Work Description

The work to be completed shall include the furnishing of all labor, supervision, materials and equipment necessary for the routine and emergency cleaning, repair and maintenance of bus stop shelters and appurtenances, bus benches, trash receptacles, solar light poles, other bus stop amenities, and concrete foundations, hereinafter referred as bus stop amenities, located at designated transit stops within the unincorporated areas of the County as specified in Exhibit E. The work also includes the collection, transportation, and disposal of waste from trash receptacles located at designated transit stops within the unincorporated areas of the County as specified in Exhibit E. All work must comply with the Specifications included in Exhibit F.

The County reserves the right to determine if any work is or will be needed and/or requested under this Contract, at the County's sole and absolute discretion. The Contractor waives all claims against the County for consequential damages resulting from the County's failure to use the Contractor's services, including, but not limited to, lost profit.

The County reserves the right to add or delete a location and to change the frequency of the maintenance at any of the selected transit stops at anytime during the life of this Contract at the sole discretion of the County.

D. Hours and Days of Service

1. Maintenance of Bus Shelters and Amenities

No maintenance work shall be done within the peak traffic hours, from 6 a.m. to 9 a.m., and 4 p.m. to 7 p.m., Monday through Friday, except holidays. All construction, installation, repair, relocation, or removal work shall not be performed during the peak traffic hours unless the work is of an emergency nature or otherwise approved by the Contract Manager.

2. Collection, Transportation, and Disposal of Waste from Designated Transit Stops

No routine manual waste collection services at designated transit stops shall be done within the peak traffic hours, from 6 a.m. to 9 a.m., and 4 p.m. to 7 p.m., Monday through Friday, except holidays. Emergency manual waste collection or bus stop cleaning services to mitigate public safety or health issues may be allowed at any time and day.

E. Equipment

1. Service and Support Vehicles

The Contractor shall provide any and all service and support vehicles necessary for adequate operation, maintenance, and supervisory support. These vehicles shall be in good operating condition and appearance. Contractor shall also comply with requirements as described in subsection E.3, Maintenance and Waste Collection Vehicles, herein for vehicles used to collect, transport, and manage/dispose of waste.

2. Pressure Wash Vehicles

Water and residuals from pressure washing sidewalks or bus stop amenities shall not be allowed to enter the storm drain.

3. Maintenance and Waste Collection Vehicles

Contractor shall:

a. Provide a sufficient number of vehicles (chassis and bodies) for providing manual waste collection services at all designated transit stops located within the unincorporated areas of the County as specified in Exhibit E.

b. Provide and have available at all time vehicles that are leak proof for use in the manual collection and transportation of waste. Each vehicle shall be equipped with metal bodies and covers.

c. Comply with all related County ordinances, State Vehicle Codes, and all conditions and limitations in any permits or licenses under which Contractor operates, including, but not limited to, a California Class A or B or C61 (D34) contractor's license and a valid Waste Collector Permit issued by the County Department of Health Services.

d. Be responsible for maintaining established inspection and maintenance procedures to ensure that all manual collection vehicles are safe to operate within the areas at all times in accordance with the requirements promulgated by the County of Los Angeles Department of Health Services, the California Highway Patrol, the South Coast Air Quality Management District (SCAQMD), the vehicle manufacturer, and all other applicable Federal, State, County, and local laws and regulations.

e. Use vehicles to collect, transport, and manage/dispose of waste that are so constructed such that liquids and waste do not blow, fall, sift, or leak out of the truck and onto the street.

f. Use vehicles to collect, transport, and manage/dispose of waste that are equipped with an adequate shovel and broom.

g. Use vehicles to collect, transport, and manage/dispose of waste that are at all times, kept clean, in good mechanical condition, and well painted, all to the satisfaction of the Contract Manager. All such vehicles shall be painted the same color or colors.

h. Possess a sufficient number of manual collection vehicles for collecting in the unincorporated areas, including spare vehicles to maintain the collection schedule at all times. Spare vehicles shall be fully fueled and ready to dispatch and replace any vehicle, which breaks down on route within reasonable time of such breakdown. All manual collection vehicles shall be equipped with adequate radio/communication equipment for office-to-field communication.

i. Comply with all the provisions issued by the SCAQMD for all new or replacement of automated and/or manual collection vehicles for work performed under this Contract.

j. Maintain records of inspections and maintenance of all mechanical equipment used in providing the required services under this Contract, including records of preventive maintenance and repairs performed. Items to be inspected shall include, among others, those required in the inspections conducted by the County of Los Angeles Department of Health Services, the California Highway Patrol, and those recommended by the manufacturer. All

inspection and maintenance records shall be open to inspection by the County.

k. Require drivers and Subcontractor's drivers, if applicable, to have valid licenses issued by the California Department of Motor Vehicles to operate the specific class of vehicles used in providing the required services. It is the responsibility of Contractor to monitor the drivers' driving performance and records.

l. Remove from service should the Contract Manager at any time give notification to Contractor that any designated manual collection vehicle or other conveyance is not in compliance with Public Works and/or the County of Los Angeles Department of Health Services (Health Officer), and/or the SCAQMD standards, and such vehicle or other conveyance shall not be used again until inspected and approved by the Contract Manager and/or the Health Officer. Contractor shall be held responsible for maintaining the collection schedule regardless of such action.

m. Keep all vehicles, equipment, tools, and facility used in the manual collection/management of waste clean and sanitary at all times when not in use.

n. Comply with all laws and regulations relating to the parking or storage of such vehicles and equipment.

4. Maintenance Equipment

Contractor shall be responsible for providing all necessary equipment and labor for routine maintenance, and as-needed repair, removal, relocation, replacement including trash receptacle liners, covers, and all necessary parts, accessories or materials for reconstruction or maintenance at the cost specified in Form PW-2, Schedule of Prices. Unless approved otherwise by the Contract Manager the replacement parts, accessories, and/or materials shall be identical to the original design. The Contract Manager will consider alternative trash receptacles, if necessary, including liners and dome covers, proposed by Contractor.

5. Communication Equipment

The Contractor shall have office staff operating and answering incoming calls during normal business hours (Monday through Friday, 8 a.m. to 5 p.m.). After normal business hours, the Contractor shall provide Contract Manager with an emergency telephone number at which someone can always be reached 24 hours a day, seven days a week. Contractor shall be responsible for providing two-way communication

between its office and field workers at all times, as well as for proper maintenance of this equipment.

F. Maintenance of Bus Shelters and Amenities

1. Frequency of Maintenance

Contractor shall:

a. Perform routine maintenance at all designated bus stop shelters and amenities indicated in Exhibit E. Routine maintenance shall be done on a once-a-week basis, during non-peak hours as described in subsection F.5.a, Routine Maintenance, Monday through Friday, including holidays, unless otherwise specified or directed by the Contract Manager. Upon oral or written request from the Contract Manager, Contractor shall make more visits to shelters that require additional maintenance and/or repair.

b. Pressure wash the bus stop shelter structure and sidewalk adjacent to the serviced bus stops. Pressure wash shall be done every six weeks, unless otherwise specified or directed by the Contract Manager. Perform pressure wash at a specific location within one week of notification by the Contract Manager.

c. Inspect each stand-alone solar light pole for functionality once every two months.

d. Keep the roof/gutter of each shelter free of dirt and leaves.

2. Emergency Services

Emergency construction, maintenance, repair, or removal of damaged bus stop shelters and amenities required to eliminate a hazard to pedestrian, property, or vehicular traffic may occur at any time and day, but only to the extent required to remove the hazard. Other exceptions for specific locations may be allowed upon approval of Contract Manager.

3. Graffiti Removal Services

Graffiti removal services shall consist of performing all operations to remove or cover graffiti from all exterior surfaces within a 10-foot radius of each bus stop amenity, but shall not be performed beyond the face of curb or onto private property. Failure to comply with this requirement shall result in the assessment specified in subsection M.4.h, Liquidated Damages.

The Contractor shall:

a. Remove or paint over all graffiti on all designated bus stop amenities within 24 hours of the graffiti being discovered by the Contractor, or being reported by the County. Profanity, sexually explicit, or racist type graffiti shall have the highest removal priority. Graffiti placed on bus stop amenities during the weekends shall be removed on the following work day. Within 48 hours of initial paint-over, Contractor shall repaint using a color to match the existing surface color, if a matching color was not utilized initially.

b. Use appropriate methods of covering or removing graffiti for the particular surface and conditions, such as water blasting, painting over, chemical solvents, etc. Water and residuals from water blasting shall not be allowed to enter the storm drain.

c. Use County-approved chemical solvents when removing graffiti from County property.

d. Use paint that is appropriate for nontreated surfaces on County property.

e. Match the existing color of the surface when painting over or obscuring graffiti whenever possible. Paint shall be neatly feathered in all areas.

f. Use drop cloths on all work assignments to protect sidewalks, vegetation, etc., from paint spillage.

g. Train personnel in proper graffiti removal techniques and provide corrective instruction to personnel if they are removing or covering graffiti improperly.

h. Use new or recycled water-based paints.

i. Sidewalk Surfaces: Remove graffiti from concrete sidewalks by using a water blasting machine with a soda compound only. Painting over shall not be permitted. The sidewalks shall be cleaned of all graffiti, graffiti residues, paint, ink, gum, oil, etc. The sidewalks shall be blocked off for safety during the cleaning operations. Adequate precautions shall be taken not to damage private property during water blasting operations, i.e., precautionary measures to prevent water from going under shop doors, damaging store fronts, etc. The sidewalk areas being cleaned shall be feathered to match other graffiti-free sidewalk areas.

j. Dispose of excess paint properly. Paint liners shall be opened, mixed with sand, dirt, or cat litter and allowed to dry. Once the paint is completely dry, it can be disposed of in the regular trash.

k. Wash paint brushes, rollers, or frames in clean water. The water shall only be disposed of in a sink or toilet. Water used to clean paint tools shall not be disposed of in storm drains and street gutters and/or on sidewalks and streets.

4. Locations and Permits

Bus stop shelter and amenity locations shall be at designated transit stops located in the unincorporated areas of the County determined by the Contract Manager as specified in Exhibit E. Contract Manager shall have the right to direct Contractor to replace, remove or relocate any of the bus stop shelters and amenities. Contract Manager shall provide typical design and specifications, as well as all necessary permits and inspections, as required and outlined in subsection F.10, Specifications, Permits, and Inspections.

5. Maintenance Specifications

a. Routine Maintenance

(1) General Scope

Contractor shall maintain the bus stop amenities in a safe, clean, attractive, and sanitary condition and in good order satisfactory to the Contract Manager. At each maintenance visit, Contractor shall clean, wash and remove all graffiti, stickers, posters, litter, dust, dirt, and weeds from each bus stop amenity to keep each bus stop amenity (including the roof/gutter and/or electronic message display, of the shelters, if applicable), and immediate area free of any noticeable accumulation of dirt, dust, marks, stickers, posters, litter, or weeds. The bus stop amenity shall be maintained in a continual like new condition. Bus stop shelters may be energized using hard wire or solar panels attached directly to the shelter or to a pole adjacent to the shelter. Maintenance shall be performed within a 10-foot radius of the bus stop amenities, but shall not extend beyond the face of curb or onto private property. If notified by the Contract Manager that additional maintenance is required, Contractor shall correct the condition within two working days of receipt of notice. The Contract Manager reserves the right to add or remove bus stop amenity locations

throughout the unincorporated areas of the County. The maintenance cost per shelter and appurtenances, bus benches, trash receptacles, and stand-alone solar-powered lighting shall be specified in Form PW-2, Schedule of Prices, Maintenance of Bus Shelters and Amenities.

(2) Pressure Wash

Contractor shall pressure wash bus stop shelters, and sidewalk within a 10-foot radius of the bus stop shelters at a frequency as indicated in subsection F.1, Frequency of Maintenance. Contractor shall indicate how wastewater will be treated and not discharged to the storm drain.

(3) Best Management Practices - Trash Receptacle

Contractor shall carry an adequate supply of clean aluminum liners during routine maintenance visits to ensure that liners are kept in a clean condition. Contractor shall promote Best Management Practices (BMPs) not to allow any waste or liquid from trash receptacles or liners to enter the storm drains and/or street gutters during the maintenance of trash receptacles and liners. This is a violation of NPDES regulations. Contractor shall replace all aluminum liners with new or cleaned aluminum liners as needed to the satisfaction of the Contract Manager. Soiled aluminum liners shall be cleaned at Contractor's facility in accordance with all Federal, State, and local regulations. The County may require Contractor to install a County furnished padlock on trash receptacle dome covers to prevent vandalism.

b. <u>Repair</u>

(1) Contractor shall perform repair to damaged bus stop amenities within five working days or within a time frame approved by the Contract Manager for any damage or vandalism found by Contractor's employees, agents, or subcontractors. Contractor shall provide County a cost estimate and obtain approval from the Contract Manager before proceeding with the repair. All damaged amenities shall be repaired to the satisfaction of the Contract Manager.

(2) Upon notification from constituents and/or the Contract Manager of a potential hazard or damage or vandalism of an emergency nature to the public, Contractor shall expedite repairs or render the condition safe. Within two hours of

notification, Contractor shall tape off the affected areas to make them safe until repairs are completed. Repairs shall be completed within 24 hours of notification. Failure to comply with this requirement for emergency repair shall result in the assessment of liquidated damages, specified in subsection M.4.a.

(3) Contractor shall repair all leaking or damaged trash receptacles within five working days of oral or written notice from Contract Manager or at times found by Contractor's employees, agents, or subcontractors. In the event that the repairable or damaged trash receptacle cannot be repaired prior to the next scheduled collection, Contractor may, with the approval of the Contract Manager, provide a temporary but acceptable trash receptacle until Contractor provides a permanent replacement. A trash receptacle is considered acceptable when it has a solid exterior and liner and has a cover or dome to prevent rain water from getting into the trash receptacle. Failure to comply with this requirement shall result in the assessment of liquidated damages specified in subsection M.4.f.

(4) Contractor shall maintain a record of all the repaired or replaced amenities. The record shall include, but not limited to, location, type of amenities, date of repair or replacement, and reason for repair or replacement. Contractor shall submit a monthly log specifying, at minimum, information defined in subsection F.11.a, Reports.

c. <u>Duty to Remove</u>

(1) The County reserves the right to require the Contractor to remove bus stop amenities for any reason at the cost specified in Form PW-2, Schedule of Prices, Removal of Bus Stop Amenities.

(2) Said removal shall be performed in accordance with all applicable laws, ordinances, or other regulations and the premises shall be restored to their original condition as set forth in subsection F.15, Restoration of Site upon Removal or Relocation.

(3) If the bus stop amenity is totally destroyed due to fire, accident, or force of nature; Contractor shall remove the affected amenities within 24 hours of notification by the Contract Manager. Contractor shall secure the bus stop

amenity with caution tape within two hours of notification. Failure to remedy an emergency removal shall result in the assessment specified in subsection M.4.g, Liquidated Damages.

d. Replacement

Contractor shall:

(1) Notify and obtain prior approval from the Contract Manager before replacement is made. Work shall be completed within five working days or within a time frame approved by the Contract Manager at the cost specified in Form PW-2, Schedule of Prices, Replacement.

(2) Be responsible for providing all necessary replacement equipment and labor for maintenance, including, but not limited to, trash receptacle exterior frames, liners, and all necessary parts, accessories or materials for reconstruction or maintenance of said contract at the cost specified in Form PW-2, Schedule of Prices, Replacement. At the request of the Contract Manager, replace and post Public Service Announcements (PSAs) supplied by the County, at the cost specified in Form PW-2. Unless approved otherwise by the Contract Manager the replacement equipment and/or parts and accessories shall be identical to the original design. The Contract Manager will consider alternative trash receptacles, including liners and dome covers, proposed by Contractor.

(3) Charge in accordance with Contractor's price stated in Form PW-2, Schedule of Prices, Replacement, for each replacement of each part or entire amenity, labor, or any other necessary changes.

e. Relocation

Contractor Shall:

(1) At the request of Contract Manager, relocate any bus stop amenity, at the cost specified in Form PW-2 Schedule of Prices, Relocation. The cost to relocate a bus stop amenity includes the cost to remove it from one location and install it at another location. If a bus stop amenity is to be removed temporarily and reinstalled at a later date, the Contractor will separately charge the County for the cost to remove and the cost to reinstall as specified in Form PW-2.

(2) Make arrangements to diligently pursue construction completion of any relocated amenity. A bus stop amenity shall be considered completed when 1) all installations, assemblies, and electrical connections (if any) are accepted by County inspector; 2) the amenity is fully functional; and 3) the amenity may be safely used by the public.

(3) Be responsible to energize bus stop shelters using either hard wire or solar panels attached directly to the shelter or to a pole adjacent to the shelter in a method approved by the Contract Manager.

(4) Perform relocations in accordance with all applicable laws, ordinances, or other regulations and the premises shall be restored to their original condition as set forth in subsection F.15, Restoration of Site upon Removal or Relocation.

f. <u>Reinstallation</u>

Contractor Shall:

(1) At the request of Contract Manager, reinstall any bus stop amenity that was previously removed from the same or different location, at the cost specified in Form PW-2, Schedule of Prices, Reinstallation.

(2) Make arrangements to diligently pursue construction completion of any reinstalled amenity. A bus stop amenity shall be considered completed when 1) all installations, assemblies, and electrical connections (if any) are accepted by County inspector; 2) the amenity is fully functional; and 3) the amenity may be safely used by the public.

(3) Be responsible to energize bus stop shelters using either hard wire or solar panels attached directly to the shelter or to a pole adjacent to the shelter in a method approved by the Contract Manager.

(4) Perform reinstallations in accordance with all applicable laws, ordinances, or other regulations and the premises shall be restored to their original condition as set forth in subsection F.15, Restoration of Site upon Removal or Relocation.

g. Electrical Work

Electrical repair work shall comply with the National Electrical Code (NEC) requirements. Contractor shall have the right to enter upon and into the bus shelters at any reasonable time with its certified electrician for the purposes of any electrical maintenance. Contractor shall have access to all necessary electric wires, meters, clockwork machinery, and other parts of the structure necessary for maintaining the shelters and all such work shall be included with the price specified in Form PW-2, Schedule of Prices, Routine Maintenance of Bus Shelters and Amenities. If an electrical malfunction occurs, the Contractor shall de-energize the shelter and notify the Contract Manager immediately. All repairs shall be completed within 24 hours. Failure to comply with this requirement shall result in the assessment specified in subsection M.4.b, Liquidated Damages.

h. Electrical Lighting and Solar-Powered Lighting

All bus shelters shall be illuminated from dusk to dawn. Contractor shall be responsible to ensure proper illumination within bus shelters using either hard wire or solar panels attached directly to the shelter or to a pole adjacent to the shelter in a method approved by the Contract Manager. During each maintenance visit, Contractor shall examine lighting for functionality for shelters that are hard-wired or have solar panels attached to the roof. Stand-alone solar-powered light poles are to be examined every two months for functionality. If electrical lights or solar-powered lights are found to be malfunctioning at the time of maintenance, or upon oral or written request from Contract Manager, Contractor shall be required to repair, or replace electrical or solar-powered lighting with similar lighting within 48 hours or within a time frame approved by the Contract Manager. If new batteries are required for solar-powered lighting, the old batteries shall be recycled in accordance with all Federal, State, and local regulations. Contractor shall provide a receipt to ensure that solar panels and apparatus are recycled properly. Failure to comply with this requirement shall result in the assessment specified in subsections M.3.c and/or M.3.d, Liquidated Damages.

i. Performance Requirements

Public Works will make monthly inspections of randomly selected shelters to ascertain the condition of shelters. A shelter may be considered in unacceptable condition if one or more of the following conditions are found during the inspection:

- Visible graffiti from the street
- An unsightly/significant amount of litter, dust, dirt, or weeds within a 10-foot radius of shelter
- Overflow of trash
- Missing or damaged components of shelter
- Exposed electrical wires
- No illumination

When there is a justifiable reason for the shelter to be in an unacceptable condition, such as a community event that took place immediately prior to the inspection, the Contractor shall provide this justification in writing to the Contract Manager.

j. Suppliers

The following is a list of suppliers available for the type of trash receptacles, benches, and shelters required. This list is not exclusive, contractor may use other suppliers approved by County if not exclusive.

For bus shelters, trash receptacles, and benches, Contractor can contact any of the following:

1.) LNI Custom Manufacturing, Inc.
12536 Chandron Avenue
Hawthorne, CA 90250
(310) 978-2000, Fax (310) 978-4000
Contact: Craig Watterson

2.) Seating Component
4520 East La Palma Avenue
Anaheim, CA 92807-1908
(714) 693-3376, Fax (714) 693-3353
Contact: Mark Fossier

3.) Tolar Manufacturing, Inc.
258 Mariah Circle
Corona, CA 92879
(951) 808-0081, Fax (951) 808-0041
Contact: Patrick Merrick

For bus stop benches and trash receptacles only, Contractor can contact any of the following:

1.) Specialty Building Components
7750 Painter Avenue
Whittier, CA 90602
(562) 945-8951
Contact: Gloria Irigoyun

2.) The Wakefield Company
49 Augusta
Irvine, CA 92620
(949) 552-1130
Contact: Ryan Richard

3.) Barco Products Company
11 North Batavia Avenue
Batavia, IL 60510-1961
(800) 338-2697, Fax (630) 879-8687

Vendors for Solar Light Poles only, Contractor can contact any of the following:

1.) National Solar Technologies
166 Taylor Drive
Depew, NY 14043
(808) 310-7413, Fax (716) 683-8655
Contact: Paul Vargovich, Jr.

2.) Sol Inc.
3210 SW 42nd Avenue
Palm City, FL 34990
(800) 959-1329, Fax (772) 286-9616
Contact: Matt Hollister

3.) Carmanah Technologies
Building 4-203 Harbour Road
Victoria, British Columbia
Canada V9A 3S2
(877) 722-877

4.) All Purpose Manufacturing, Inc.
6401 Nohl Ranch Road, Suite 80
Anaheim, CA 92807
(877) 877-8006
Contact: Mark Fossier or Orlando Vargas

6. Collection, Transportation, and Disposal of Waste from Designated Transit Stops

a. General Scope

Contractor shall only dispose of waste under this Contract at permitted facilities and shall comply with all Federal, State, and local laws and regulations. Except as noted otherwise, Contractor shall NOT collect, transport, or dispose of hazardous or toxic materials as defined per Federal, State, or local laws or regulations under this Contract. Contractor shall immediately notify County if hazardous or toxic materials are discovered during the collection.

Waste collection, transportation, and disposition shall be done in a thorough and professional manner to the satisfaction of the Contract Manager. The Contract Manager shall approve or disapprove Contractor's performance under this Contract. These services shall be performed by a permitted trash hauler. Under the requirements of the permit, which is issued by the County of Los Angeles Department of Health Services (DHS), the sizes and types of the trucks, etc. will be determined. The hauler's facility to store and maintain the trucks will also be regulated by DHS. For further information regarding this requirement you may contact DHS at (626) 430-5550.

b. Emergency Services

Emergency manual waste collection services required to eliminate a hazard to either pedestrian, property, or vehicular traffic may occur at any time and day, but only to the extent required to remove the hazard. Other exceptions for specific locations may be allowed upon approval of the Contract Manager.

c. Frequency of Collection

Contractor shall manually collect waste from all trash receptacles at designated transit stops indicated in Exhibit E.

Routine collection of waste shall be done once a day, three times a week, Monday through Friday, including holidays, unless otherwise specified. Routine collection of waste shall be done during non-peak hours. Peak hours are defined from 6 a.m. to 9 a.m. and 4 p.m. to 7 p.m.

Contractor shall strictly adhere to the collection schedule and frequency of collection unless otherwise specified or directed by the Contract Manager.

The County reserves the right to add or delete a location and/or the frequency of collection at any of the selected transit stops at anytime during the term of this Contract.

Contractor may be required, upon oral or written request from the Contract Manager, to return to any collection route to collect waste not picked up at the designated transit stops. This shall be performed whenever directed by the Contract Manager.

Failure to comply with each collection schedule shall result in the assessment specified in subsection M.4.e, Liquidated Damages.

d. Noncollection Items

Hazardous materials and all bulk items including, but not limited to, furniture, appliances, household bedding, mattresses, box springs, stoves, refrigerators, and other household items considered as noncollection items by waste haulers shall NOT be collected by Contractor. Contractor shall report all noncollection items to Public Works Programs Development Division at (626) 458-3961 (Monday through Thursday) on the same business day. If Public Works office is closed, Contractor shall report noncollection items on the next Public Works' business day and keep a record of all locations where the noncollection items have been left.

e. Care of Liners

All liners, for manual collection, shall be properly returned and placed after collection. Liners shall not be deposited on the streets, highways, or on adjoining property. Contractor, its agents, and/or its employees shall not throw or drop liners from the truck onto the pavement, or in any other way that may break or damage them.

At the time of collecting waste from each trash receptacle each day, Contractor shall place and secure a plastic bag inside each liner to maintain the clean condition of the aluminum liners. The plastic bags shall be heavy duty and designed to have suitable strength to contain the waste materials therein.

f. Collection Specifications

The County reserves the right to add or remove trash receptacle locations throughout the unincorporated areas of the County as specified in Exhibit E, at anytime during the term of this Contract at the sole discretion of the Contract Manager. The cost of waste collection, transportation, and disposal shall be specified in

Form PW-2, Schedule of Prices, for Collection, Transportation, and Disposal of Waste.

g. Waste Collection and Reporting

(1) Waste Collection - All waste collected from the trash receptacles shall be sent to a permitted materials recovery facility (MRF) for processing and recovery of recyclables to the maximum extent reasonable and feasible including, but not limited to, paper, CRV beverage containers, glass, number 1 and 2 plastics, steel, and aluminum. Waste remaining after the removal of recyclables may be disposed of at a permitted waste disposal facility. Unless otherwise approved in writing by the Contract Manager, the Contractor or the MRF operator SHALL NOT dispose of any recovered recyclables in a disposal site and/or transformation facility.

A list of all permitted MRFs in the County can be obtained by calling the Solid Waste Information System hotline at 800-320-1771 or by visiting www.solidwastedrs.org and clicking on "Where to Take Your Waste" link on the left side and choosing option 3 for a list of transfer stations.

(2) Reporting - Contractor shall prepare or cause to be prepared reports on a monthly basis that provide the following information on waste collected from the trash receptacles:

(a) Month and year of reported collection

(b) Total quantity (in tons) of waste collected

(c) Location (route, community, watershed, etc.) where the waste was collected

(d) The permitted materials recovery, disposal, or transfer facility where the collected waste was sent (facility name, address, and contact information)

(e) Quantity of collected waste (in tons) recovered/salvaged (i.e., not sent for disposal) by the MRF

(f) Quantity of collected waste (in tons) sent for disposal

Note that total tons collected shall equal tons recovered/salvaged plus tons disposed.

Monthly reports containing the above information in a format acceptable to the Contract Manager are due no later than 15 days after the last day of the month included in the report. Reports shall be signed by an authorized representative of the Contractor. Monthly reports prepared by the MRF containing all of the information above and in a format acceptable to the Contract Manager and transmitted by the required date with a letter signed by the Contractor's authorized representative will be acceptable.

(3) Contractor shall maintain an active Waste Collectors Permit issued by Department of Public Health at all time throughout the term of the contract.

7. Title of Improvements

All structures, constructed and maintained by the Contractor upon the County's right of way pursuant to the Contract, shall remain the ownership of the County. Upon termination or cancellation of contract, Contractor shall not perform any additional routine maintenance service, but shall complete any work in progress.

8. National Pollutant Discharge Elimination System (NPDES)

The Contractor shall not allow any debris from its operations under this Contract to be deposited into the storm drains and/or street gutters. Such debris is in violation of the NPDES regulations. According to the NPDES regulations, nothing shall be discharged into the storm drain system other than stormwater. The Contractor shall follow all NPDES regulations in accordance with the Contractor's Work Plan. The Contractor shall follow its Work Plan throughout the entire Contract unless otherwise approved in writing by the Contract Manager.

9. Lead Person

Contractor shall assign a lead person whose responsibility shall be to represent Contractor's operation in the field, and who shall serve as liaison between Contractor's crews in the field and the County. The lead person shall spend as much time supervising the collection routes as is needed to accomplish the provisions of these Specifications.

The lead person shall be provided with a separate vehicle, other than a vehicle used for collection of waste. Within ten days of the award of this Contract, Contractor shall inform the Contract Manager of the name, title, and telephone number of the assigned lead person.

10. Specifications, Permits, and Inspections

As requested, Contract Manager will provide typical designs and specifications, as well as all necessary permits and inspections for the construction of any relocation or replacement bus stop shelter, including amenities as well as any bus bench or trash receptacle, including a description of materials to be used as shown in Exhibit F. Contractor shall submit final design for aforementioned facilities and amenities to Contract Manager for final approval prior to installation.

All removal, relocation, and installation work shall conform to the STANDARD SPECIFICATIONS FOR PUBLIC WORKS CONSTRUCTION latest edition. All work and workmanship deemed to be substandard or inadequate by the Contract Manager will be corrected or replaced at no cost to County.

11. Reports

Contractor shall submit monthly reports along with the invoice. The first monthly report shall be due no later than 15 days after the first month, commencing from the first day of operation.

The reports shall be submitted via fax to Mr. William Yan at (626) 979-5313, within 15 days of the end of the previous month or via mail to the County of Los Angeles Department of Public Works, Programs Development Division, Transit Operations Section, P.O. Box 1460, Alhambra, California 91802-1460, within the same due date as via fax unless otherwise notified by the Contract Manager. The person to whom the reports are to be addressed is subject to change. Pubic Works will notify the Contractor of any such change.

Monthly reports are as follows:

a. A comprehensive report of all repairs, removals, relocations, and replacements of bus stop shelters, benches, trash receptacles, and other bus stop amenities in the unincorporated areas of the County as specified in Exhibit E. Reports shall include service date, location, reason for service, description of service, and any other information required by Contract Manager.

b. A detailed waste disposal report as defined under subsection F.6.g.2, Waste Collection and Reporting.

When Contractor submits monthly reports to the Contract Manager such reports shall be deemed timely only if delivered or postmarked on or before the due date. If reports are not received in a timely manner,

County may withhold payment on Contractor's invoice until the receipt of the required reports.

In addition to the regular monthly reports, the Contractor shall provide a report every two months detailing test results for functionality of all stand-alone solar-powered light poles.

12. Routes and Changes

Contractor shall prepare and file with the Contract Manager within 30 days of the award of this Contract, a schedule for maintenance and trash collection. Each schedule should include a complete map of each route. As part of each schedule, Contractor shall provide Contract Manager detailed information as to how Contractor proposes to schedule on or around holidays. Said schedules shall be approved by the Contract Manager. The schedule, when approved by the Contract Manager, shall be maintained unless a change therein is first approved by the Contract Manager and notice thereof is given as hereinafter provided.

Thereafter, before any change in the maintenance schedule is made by Contractor, Contractor shall provide 10 working days prior written notice of the proposed change to the Contract Manager, along with the proposed revised maintenance schedule, together with a new map. No such change may be effected until first approved by the Contract Manager.

13. Public Convenience and Safety

Contractor's operations shall cause no unnecessary public inconvenience. The access right of the public in the streets shall be considered at all times.

Contractor shall provide all safety measures necessary to protect the public and his/her workers.

14. Monitoring

Periodic monitoring of the designated location's work will be made by the Contract Manager to assure compliance with this Contract.

15. Restoration of Site Upon Removal or Relocation

Upon removal or relocation of any bus stop amenities, the sites shall be restored by the Contractor to their original condition or to the satisfaction of the Contract Manager. All obstructions shall be removed and any holes shall be filled with material compatible with existing material.

16. Uniforms

All employees of Contractor shall be dressed with uniformity and in clean uniforms furnished by Contractor to the satisfaction of the Contract Manager. The uniform shall bear Contractor's name and logo, if applicable. Contractor shall maintain an array of uniforms in various sizes for use by new employees.

Contractor's employees shall not remove portions of their uniform while working under this Contract. No employee shall start work unless the employee is dressed in a clean uniform. Contractor shall furnish each employee a set of rain gear, which shall be carried in the vehicle for use in case of inclement weather.

17. Entering Private Property

Unless otherwise specified in this Contract or by the order of the Contract Manager, Contractor shall conduct all of its activities and operations within the confines of the County's right of way. Contractor shall not allow its employees to use private property for eating, coffee breaks, or any other reason or use water from such property without the written permission of the owner.
Contractor shall indemnify and hold the County harmless from all claims of damages occasioned by such work or activity, whether done in compliance with this section and with permission or in violation of this section without permission.

G. Alternative Bus Stop Amenities and Adjustments to price

If during the term of this Contract the listed materials including, but not limited to, bus stop shelters, bus benches, trash receptacles, and other bus stop amenities are no longer commercially available at costs reasonably similar to the costs incurred at time of bid, Contractor shall complete and submit the form included in Exhibit H for the Contract Manager's approval of these increased costs.

If the County requires the Contractor to maintain an alternative type or design of a bus stop amenity that did not exist at the time of the award of this Contract, Contractor shall submit the enclosed form in Exhibit H, indicating the revised cost of as-needed repair, replacement, relocation, and removal of such amenity for the Contract Manager's approval.

H. Pass-Through Costs and Extra Work

The County recognizes that there may be needed construction, installation, maintenance, repair or modification to bus stop shelters or other bus stop amenities not covered under this Contract and for which the Contractor is not compensated under **Form PW-2, Schedule of Prices**.

A couple of examples for pass-through costs are as follows:

- Modify or retrofit bus stop amenities.
- Add innovative features in accordance with transit needs or technological development. (i.e., Install real-time bus arriving information display, information booth, or other power source that conserves energy to operate shelters)

The County shall allow the Contractor to pass-through the amounts necessary to cover items not specifically mentioned in Form PW-2 only if the County has authorized the work in writing prior to the Contractor's initiation of work for the item(s). Claims for payment of pass-through costs shall include all supporting documentation of costs, approvals, and copies of vendor invoices. In order to be eligible for pass-through costs for items not specifically mentioned in the Form PW-2, Schedule of Prices, the Contractor must present the required scope of repairs to the Contract Manager, and the Contract Manager must approve the repairs in writing prior to the work commencing.

If Extra Work (emergency or unforeseen work) is necessary, the Contractor shall provide Public Works with a cost estimate, including the number of hours required for the work broken down by job classification. Public Works, at its sole discretion, may issue a Notice to Proceed to the Contractor for Extra Work. Extra Work shall conform to the requirements in subsection 3-3 of the "Standard Specifications for Public Works Construction, 2006 Edition," and the Public Works "Additions and Amendments to the Standard Specifications for Public Works Construction, 2006 Edition," dated June 2006. Electrical repair work shall comply with the NEC requirements.

I. Responsibilities of Public Works

Public Works' responsibilities will include, but not be limited to, monitoring and inspecting Contractor's performance to ensure compliance with the Terms, Requirements, Specifications, and Conditions described herein.

Public Works will make monthly inspections of randomly selected shelters to ascertain the condition of shelters. A minimum of 90 percent of the shelters inspected on a quarterly basis shall meet the maintenance requirements indicated in Section F. Failure to comply with this requirement shall result in the assessment of liquidated damages as indicated in subsection M.4.j, of this scope. Before liquidated damages are assessed, the Contractor may provide a written explanation regarding justifiable reasons for the unacceptable condition, such as a community event that took place immediately prior to the inspection.

J. Utilities

The County will not provide utilities.

K. Storage Facilities

The County will not provide storage facilities for the Contractor. Contractor shall properly store all vehicles, equipment and materials, including, but not limited to, auxiliary shelters, benches, solar-powered lighting, trash receptacles and parts, accessories and materials necessary for repair, and replacement and maintenance of the equipment and County facilities, at the sole cost of the Contractor at its own facilities. Contractor shall be responsible for determining and storing the appropriate number of auxiliary units necessary to ensure the prompt replacement of damaged units.

L. Special Safety Requirements

All Contractor operators shall be expected to observe all applicable State of California Occupational Safety and Health Administration (Cal/OSHA) and Federal, State, and County safety requirements while performing these services. Suitable clothing, gloves, and shoes that meet Cal/OSHA requirements are required.

The Contractor shall keep fully informed of Federal and State laws and County ordinances and regulations that in any manner affect those employed in the work or the materials used in the work or in any way affect the conduct of the work. The Contractor shall at all times observe and comply with such laws, ordinances and regulations. The term work as used herein includes the construction and/or maintenance of the shelters, including solar panels, batteries, apparatus, benches, and trash receptacles as well as the collection, transportation, and disposal of waste at designated transit stops.

M. Liquidated Damages

1. In any case of the Contractor's failure to meet certain specified performance requirements, the County may, in lieu of other remedies provided by law or the Contract, assess liquidated damages in specified sums and deduct them from any regularly scheduled payment to the Contractor. However, neither the provision of a sum of liquidated damages for nonperformance or untimely or inadequate performance nor the County's acceptance of liquidated damages shall be construed to waive the County's right to reimbursement for damage to its property or indemnification against third-party claims.

2. The amounts of liquidated damages have been set in recognition of the following circumstances existing at the time of the formation of the Contract:

a. All of the time limits and acts required to be done by both parties are of the essence of the Contract;

b. The parties are both experienced in the performance of the Contract work;

c. The Contract contains a reasonable statement of the work to be performed in order that the expectations of the parties to the Contract are realized. The expectation of the County is that the work will be performed with due care in a workmanlike, competent, timely, and cost-efficient manner while the expectation of the Contractor is a realization of a profit through the ability to perform the Contract work in accordance with the terms and conditions of the Contract at the Proposal price;

d. The parties are not under any compulsion to Contract;

e. The Contractor's acceptance of the assessment of liquidated damages against it for unsatisfactory and late performance is by agreement and willingness to be bound as part of the consideration being offered to the County for the award of the Contract;

f. It would be difficult for the County to prove the loss resulting from nonperformance or untimely, negligent, or inadequate performance of the work; and

g. The liquidated sums specified represent a fair approximation of the damages incurred by the County resulting from the Contractor's failure to meet the performance standard as to each item for which an amount of liquidated damages is specified.

3. The Contractor shall pay Public Works liquidated damages in the sum of $100 for each consecutive calendar day that the Contractor fails to comply with any requirements not addressed in subsection M.4 listed below within the time specified unless otherwise provided in this scope.

4. All the time limits and acts are required to be done in accordance with this Contract and should Contractor fail to perform or complete the work required to be done as set forth in this Contract, the County may assess liquidated damages through a separate invoice process as follows:

a. Failure to remedy, within 24 hours after notification by the Contract Manager, an emergency repair of a bus stop amenity subject to a potential hazard, damage, or vandalism of an emergency nature, which is found to be justified by the Contract Manager - $250 per occurrence per day for bus stop shelter and $100 per occurrence per day for bus bench or trash receptacle as outlined in subsection F.5.b.2.

b. Failure to repair or replace damaged, faulty or exposed electrical components related to the illumination of the bus stop shelter and its immediate area within 24 hours after notification by the Contract Manager - $500 per occurrence per day as outlined in subsection F.5.g, Electrical Work.

c. Failure to repair or replace shelter lighting within 48 hours of notification by the Contract Manager - $100 per occurrence per day as outlined in subsection F.5.h.

d. Failure to recycle batteries used for solar lighting in accordance with all Federal, State and local regulations - $200 per occurrence as outlined in subsection F.5.h.

e. Failure to maintain the schedule for the manual collection of waste during the hours of service as defined in subsection F.6.c - $50 per day per unit not collected on the scheduled day.

f. Failure to replace leaking or damaged trash receptacles with similar trash receptacles within five working days of notification by the Contract Manager - $100 per each occurrence per day as outlined in subsection F.5.b.3.

g. Failure to remedy, within 24 hours after notification by the Contract Manager, an emergency removal of a bus stop amenity, which is found to be justified by the Contract Manager - $50 per each occurrence per day for bus bench or trash receptacle and $200 per each occurrence per day for bus stop shelter as outlined in subsection F.5.c.3.

h. Failure to perform all operations to remove or cover graffiti from all exterior surfaces of bus stop shelters, bus benches, trash receptacles, and solar panels and apparatus, within 24 hours of notification by the Contract Manager - $50 per occurrence per day as defined in subsection F.3, Graffiti Removal Services.

i. Failure to submit any reports in the time frame as specified in the Contract - $100 per occurrence per day as outlined in subsection F.6.g.2 and subsection F.11, Reports.

j. Failure to maintain the shelters as required in Section F, thereby resulting in the County determining, as part of the random monthly monitoring, more than 10 percent of the shelters quarterly inspected are in an unacceptable condition - $500 per occurence.

k. Failure to remedy a shelter found to be in an unacceptable condition within two days of receipt of notice from County - $50 per day per shelter.

l. Failure to pressure wash a shelter within one week after notification by the Contract Manager - $100 per occurrence per day as outlined in subsection F.1.b.

m. Failure to secure bus stop amenities within two hours after notification, which have damage that may result in a potential hazard or that have been totally destroyed - $200 per day per occurrence as outlined in subsection F.5.b.2 and subsection F.5.c.3.

N. Prevailing Wage

The Director of the Department of Industrial Relations of the State of California has ascertained the prevailing rate of per diem wages in dollars, based on a working day of eight hours, for each craft or type of worker or mechanic needed to execute any construction or maintenance contract which may be awarded by Public Works. The current prevailing wage rates as adopted by the Director of the Department of Industrial Relations are incorporated herein by reference and may be accessed at http://www.dir.ca.gov/.

The Contractor is required to pay the prevailing wage rate referred to above and is responsible for selecting the classification of workers, which will be required to perform this service in accordance with the Contractor's method of performing the work. Pursuant to Section 1775, of the Labor Code (State of California), Contractor shall forfeit $50 for each calendar day, or portion thereof, for each worker paid less than the stipulated prevailing wage rates for any public work done under this Contract or by any subcontractor.

O. Project Safety Official

The Contractor shall designate in writing a Project Safety Official who shall be thoroughly familiar with the Contractor's Injury and Illness Prevention Program and Code of Safe Practices. The Contractor's Project Safety Official shall be available at all times (24 hours a day, seven days a week, 365 days a year) to abate any potential safety hazards and shall have the authority and responsibility to shut down an operation, if necessary. Failure by the Contractor to provide the required Project Safety Official shall be grounds for the County to direct the cessation of all work activities and operations at no cost to the County until such time as the Contractor is in compliance.

P. Contractor's Quality Control Plan

The Contractor shall establish and maintain a Quality Control Plan to assure the requirements of this Contract are met. An updated copy shall be provided to the Contract Manager on this Contract's start date and as changes occur. The plan shall include, but not be limited to, the following:

1. It shall specify the activities to be inspected on either a scheduled or unscheduled basis, how often inspections will be accomplished, and the title of the individual(s) who will perform the inspection.

2. The methods for identifying and preventing deficiencies in the quality of service performed before the level of performance becomes unacceptable.
3. A file of all inspections conducted by Contractor and, if necessary, the corrective action taken. This documentation shall be made available as requested by the County during the term of this Contract.

4. The methods for continuing service to the County in the event of a strike of Contractor's employees.

SERVICE CONTRACT GENERAL REQUIREMENTS

SECTION 1

INTERPRETATION OF CONTRACT

A. Ambiguities or Discrepancies

Both parties have either consulted or had the opportunity to consult with counsel regarding the terms of this Contract and are fully cognizant of all terms and conditions. Should there be any uncertainty, ambiguity, or discrepancy in the terms or provisions hereof, or should any misunderstanding arise as to the interpretation to be placed upon any position hereof or the applicability of the provisions hereunder, neither party shall be deemed as the drafter of this Contract and the uncertainty, ambiguity, or discrepancy shall not be construed against either party.

B. Definitions

Whenever in the Request for Proposals, Contract, Scope of Work, Specifications, Terms, Requirements, and/or Conditions the following terms are used, the intent and meaning shall be interpreted as follows:

Agreement. The written, signed accord covering the performance of the requested service.

Board. The Board of Supervisors of County of Los Angeles and Ex-Officio Board of Supervisors of the Los Angeles County Flood Control District.

Contract. The written agreement covering the performance of the service and the furnishing of labor, materials, supervision, and equipment in the performance of the service. The contract includes the Agreement, (Exhibit A - Scope of Work (Specifications), Exhibit B - Service Contract General Requirements, Exhibit C - Internal Revenue Service Notice 1015, Exhibit D - Safely Surrendered Baby Law Posters, and other appropriate exhibits and amendments. Included are all supplemental agreements amending or extending the service to be performed, which may be required to supply acceptable services specified herein.

Contractor. The person or persons, sole proprietor, partnership, joint venture, corporation, or other legal entity who has entered into an agreement with County to perform or execute the work covered by this Contract.

Contract Work or Work. The entire contemplated work of maintenance and repair to be performed, and services rendered as prescribed in this Contract.

County. Includes County of Los Angeles, County of Los Angeles Department of Public Works, Los Angeles County Road Department, and/or Los Angeles County Engineer.

Day. Calendar day(s) unless otherwise specified.

Direct Employee. Worker employed by Contractor under Contractor's state and federal taxpayer identification.

Director. The Director of Public Works, County of Los Angeles, as used herein, includes the Road Commissioner, County of Los Angeles; County Engineer, County of Los Angeles; Chief Engineer, Los Angeles County Flood Control District; and/or authorized representative(s).

District. Los Angeles County Flood Control District, or Los Angeles County Waterworks Districts, or Los Angeles County Consolidated Sewer Maintenance District.

Employee Leasing. Any agreement to employ any worker, at any tier, that is neither a subcontract nor a direct employee relationship.

Fiscal Year. The 12 month period beginning July 1st and ending the following June 30th.

Maximum Contract Sum. The Maximum Contract Sum is the aggregate total amount of compensation authorized by the Board.

Proposal. The written materials that a Proposer submits in response to a solicitation document (Request for Proposals).

Proposer. Any individual, person or persons, sole proprietor, firm, partnership, joint venture, corporation, or other legal entity submitting a Proposal for the work, acting directly or through a duly authorized representative.

Public Works. County of Los Angeles Department of Public Works.

Solicitation. Request for Proposals, Invitation for Bids, Request for Statement of Qualifications, or Request for Quotation.

Specifications. The directions, provisions, and requirements contained herein, as supplemented by such special provisions as may be necessary pertaining to method, manner, and place of performing the work under this Contract.

Subcontract. An agreement by the contractor to employ a subcontractor at any tier; to employ or agree to employ a subcontractor, at any tier.

Subcontractor. Any individual, person or persons, sole proprietor, firm, partnership, joint venture, corporation, or other legal entity furnishing supplies, services of any nature, equipment, and/or materials to Contractor in furtherance of the Contractor's performance of this Contract, at any tier, under oral or written agreement.

C. Headings

The headings herein contained are for convenience and reference only and are not intended to define or limit the scope of any provision thereof.

SECTION 2

STANDARD TERMS AND CONDITIONS PERTAINING TO CONTRACT ADMINISTRATION

A. Amendments

1. For any change which affects the scope of work, contract sum, payments, or any term or condition included in this Contract, an amendment shall be prepared and executed by Contractor and the Board or if delegated by the Board, the Director and Contractor.

2. The Board or County's Chief Executive Officer or designee may require the addition and/or change of certain terms and conditions in this Contract during the term of this Contract. County reserves the right to add and/or change such provisions as required by the Board or the Chief Executive Officer. To implement such changes, an amendment to this Contract shall be prepared by Public Works for execution by Contractor and the Director.

3. County may, at its sole discretion, authorize extensions of time to this Contract's term. Contractor agrees that such extensions of time shall not change any other term or condition of this Contract during the period of such extensions. To implement an extension of time, an amendment to this Contract shall be prepared and executed by Contractor and the Board or if delegated by the Board, the Director and Contractor. To the extent that extensions of time for Contractor performance do not impact either scope or amount of this Contract, Public Works may, at its sole discretion, grant Contractor extensions of time, provided the aggregate of all such extensions during the life of this Contract shall not exceed 120 days.

B. Assignment and Delegation

1. Contractor shall not assign its rights or delegate its duties under this Contract, or both, whether in whole or in part, without the prior written consent of County, in its discretion, and any attempted assignment or delegation without such consent shall be null and void. For purposes of this paragraph, County consent shall require a written amendment to this Contract, which is formally approved and executed by Contractor and the Board or if delegated by the Board, the Director and Contractor. Any payments by County to any approved delegate or assignee on any claim under this Contract shall be deductible, at County's sole discretion, against the claims which Contractor may have against County.

2. Shareholders, partners, members, or other equity holders of Contractor may transfer, sell, exchange, assign, or divest themselves of any interest they may have therein. However, in the event any such sale, transfer, exchange, assignment, or divestment is effected in such a way as to give majority control of Contractor to any person(s), corporation, partnership, or

legal entity other than the majority controlling interest therein at the time of execution of this Contract, such disposition is an assignment requiring the prior written consent of County in accordance with applicable provisions of this Contract.

3. Any assumption, assignment, delegation, or takeover of any of Contractor's duties, responsibilities, obligations, or performance of same by any entity other than Contractor, whether through assignment, subcontract, delegation, merger, buyout, or any other mechanism, with or without consideration for any reason whatsoever without County's express prior written approval, shall be a material breach of this Contract, which may result in the suspension or termination of this Contract. In the event of such a termination, County shall be entitled to pursue the same remedies against Contractor as it could pursue in the event of default of Contractor.

C. Authorization Warranty

Contractor represents and warrants that the person(s) executing this Contract for Contractor is an authorized agent who has actual authority to bind Contractor to each and every term, condition, and obligation of this Contract and that all requirements of Contractor have been fulfilled to provide such actual authority.

D. Budget Reduction

In the event that the Board adopts, in any fiscal year, a County budget which provides for reduction in the salaries and benefits paid to the majority of County employees and imposes similar reductions with respect to County contracts, County reserves the right to reduce its payment obligation under this Contract correspondingly for that fiscal year and any subsequent fiscal year during the term of this Contract (including any extensions) and the services to be provided by Contractor under this Contract shall also be reduced correspondingly. County's notice to Contractor regarding said reduction in payment obligation shall be provided within 30 days of the Board's approval of such actions. Except as set forth in the preceding sentences, Contractor shall continue to provide all of the services set forth in this Contract.

E. Complaints

Contractor shall develop, maintain, and operate procedures for receiving, investigating, and responding to any complaints by any individual.

1. Within 12 business days after this Contract's effective date, Contractor shall provide County with Contractor's policy for receiving, investigating, and responding to any complaints by any individual.

2. County will review Contractor's policy and provide Contractor with approval of said plan or with requested changes.

3. If County requests changes in Contractor's policy, Contractor shall make such changes and resubmit the plan within five business days for County approval.

4. If, at any time, Contractor wishes to change Contractor's policy, Contractor shall submit proposed changes to County for approval before implementation.

5. Contractor shall preliminarily investigate all complaints and notify the Contract Manager of the status of the investigation within five business days of receiving the complaint.

6. When complaints cannot be resolved informally, a system of follow-through shall be instituted which adheres to formal plans for specific actions and strict time deadlines.

7. Copies of all written responses shall be sent to the Contract Manager within three business days of mailing to the complainant.

F. Compliance with Applicable Laws

1. Contractor shall comply with all applicable Federal, State, and local laws, rules, regulations, ordinances, or directives, and all provisions required thereby to be included in this Contract are hereby incorporated by reference.

2. Contractor shall defend, indemnify, and hold County harmless from and against any and all liability, damages, costs, and expenses, including, but not limited to, defense costs and attorneys' fees arising from or related to any violation on the part of Contractor or its employees, agents, or subcontractors of any such laws, rules, regulations, ordinances, or directives.

G. Compliance with Civil Rights Laws

Contractor hereby assures that it will comply with Subchapter VI of the Civil Rights Act of 1964, 42 USC Sections 2000 (e) (1) through 2000 (e)(17), to the end that no person shall, on the grounds of race, creed, color, sex, religion, ancestry, age, condition of physical disability, marital status, political affiliation, or national origin, be excluded from participation in, be denied the benefits of, or be otherwise subjected to discrimination under this Contract or under any project, program, or activity supported by this Contract. Contractor shall comply with its EEO Certification (Form PW-7).

H. Confidentiality

1. Contractor shall maintain the confidentiality of all records obtained from County under this Contract in accordance with all applicable Federal,

State, and local laws, ordinances, regulations, and directives relating to confidentiality.

2. Contractor shall inform all of its officers, employees, agents, and subcontractors providing services hereunder of the confidentiality provisions of this Contract.

I. Conflict of Interest

1. No County employee whose position with County enables such employee to influence the award of this Contract or any competing contract, and no spouse or economic dependent of such employee shall be employed in any capacity by Contractor or have any other direct or indirect financial interest in this Contract. No officer or employee of Contractor who may financially benefit from the performance of the work hereunder shall in any way participate in County's approval, or ongoing evaluation, of such work, or in any way attempt to unlawfully influence County's approval or ongoing evaluation of such work.

2. Contractor represents and warrants that it is aware of, and its authorized officers have read, the provisions of Los Angeles County Code, Section 2.180.010, "Certain Contracts Prohibited," and that execution of this Agreement will not violate those provisions. Contractor shall comply with all conflict of interest laws, ordinances, and regulations now in effect or hereafter to be enacted during the term of this Contract. Contractor warrants that it is not now aware of any facts that create a conflict of interest. If Contractor hereafter becomes aware of any facts that might reasonably be expected to create a conflict of interest, it shall immediately make full written disclosure of such facts to County. Full written disclosure shall include, but is not limited to, identification of all persons implicated and a complete description of all relevant circumstances. Failure to comply with the provisions of this paragraph shall be a material breach of this Contract subjecting Contractor to either contract termination for default or debarment proceedings or both. Contractor must sign and adhere to the "Conflict of Interest Certification" (Form PW-5).

J. Consideration of Hiring County Employees Targeted for Layoffs or Former County Employee on Reemployment List

Should Contractor require additional or replacement personnel after the effective date of this Contract to perform the services set forth herein, Contractor shall give first consideration for such employment openings to qualified permanent County employees who are targeted for layoff or qualified, former County employees who are on a reemployment list during the life of this Contract.

K. Consideration of Hiring GAIN and GROW Participants

1. Should Contractor require additional or replacement personnel after the effective date of this Contract, Contractor shall give consideration for any such employment openings to participants in County's Department of Public Social Services' Greater Avenues for Independence (GAIN) Program and General Relief Opportunity for Work (GROW) Program who meet Contractor's minimum qualifications for the open position. For this purpose, consideration shall mean that Contractor will interview qualified candidates. County will refer GAIN and GROW participants by category to Contractor.

2. In the event that both laid-off County employees and GAIN and GROW participants are available for hiring, County employees shall be given first priority.

L. Contractor's Acknowledgment of County's Commitment to Child Support Enforcement

Contractor acknowledges that County places a high priority on the enforcement of child support laws and the apprehension of child support evaders. Contractor understands that it is County's policy to encourage all County contractors to voluntarily post County's L.A.'s Most Wanted: Delinquent Parents poster in a prominent position at Contractor's place of business. County's Child Support Services Department will supply Contractor with the poster to be used.

M. Contractor's Charitable Activities Compliance

The Supervision of Trustees and Fundraisers for Charitable Purposes Act regulates entities receiving or raising charitable contributions. The "Nonprofit Integrity Act of 2004" (SB 1262, Chapter 919) increased Charitable Purposes Act requirements. By requiring contractors to complete the Charitable Contributions Certification (Form PW-12), County seeks to ensure that all County contractors which receive or raise charitable contributions comply with California law in order to protect County and its taxpayers. A contractor which receives or raises charitable contributions without complying with its obligations under California law commits a material breach subjecting it to either contract termination for default or debarment proceedings or both. (Los Angeles County Code Chapter 2.202)

N. Contractor's Warranty of Adherence to County's Child Support Compliance Program

1. Contractor acknowledges that County has established a goal of ensuring that all individuals who benefit financially from County through contracts are in compliance with their court-ordered child, family, and spousal

support obligations in order to mitigate the economic burden otherwise imposed upon County and its taxpayers.

2. As required by County's Child Support Compliance Program (Los Angeles County Code Chapter 2.200), and without limiting Contractor's duty under this Contract to comply with all applicable provisions of law, Contractor warrants that it is now in compliance and shall during the term of this Contract maintain compliance with the employment and wage reporting requirements as required by the Federal Social Security Act (42 USC Section 653a) and California Unemployment Insurance Code Section 1088.5, and shall implement all lawfully served Wage and Earnings Withholding Orders or Child Support Services Department Notices of Wage and Earnings Assignment for Child, Family, or Spousal Support, pursuant to Code of Civil Procedure Section 706.031 and Family Code Section 5246(b).

O. <u>County's Quality Assurance Plan</u>

County or its agent will evaluate Contractor's performance under this Contract on not less than an annual basis. Such evaluation will include assessing Contractor's compliance with all this Contract's terms and conditions and performance standards. Contractor deficiencies which County determines are severe or continuing and that may place performance of this Contract in jeopardy, if not corrected, will be reported to the Board. The report will include improvement/corrective action measures taken by County and Contractor. If improvement does not occur consistent with the corrective action measures, County may suspend or terminate this Contract for default or impose other penalties as specified in this Contract.

P. <u>Damage to County Facilities, Buildings, or Grounds</u>

1. Contractor shall repair, or cause to be repaired, at its own cost, any and all damage to County facilities, buildings, or grounds caused by Contractor or employees or agents of Contractor.

2. Such repairs shall be made immediately after Contractor has become aware of such damage, but in no event later than 30 days after the occurrence. If Contractor fails to make timely repairs, County may make any necessary repairs. All costs incurred by County, as determined by County, for such repairs shall be repaid by Contractor by cash payment upon demand. County may deduct from any payment otherwise due Contractor for costs incurred by County to make such repairs.

Q. <u>Employment Eligibility Verification</u>

1. Contractor warrants that it fully complies with all Federal and State statutes and regulations regarding the employment of aliens and others and that all of its employees performing work under this Contract meet the

citizenship or alien status requirements set forth in Federal and State statutes and regulations. Contractor shall obtain, from all covered employees performing services hereunder, all verification and other documentation of employment eligibility status required by Federal and State statutes and regulations including, but not limited to, the Immigration Reform and Control Act of 1986 (P.L. 99-603), or as they currently exist and as they may be hereafter amended. Contractor shall retain all such documentation for all covered employees for the period prescribed by law.

2. Contractor shall indemnify, defend, and hold harmless, County, its Board, agents, officers, and employees from employer sanctions and any other liability which may be assessed against Contractor or County or both in connection with any alleged violation of Federal or State statutes or regulations pertaining to the eligibility for employment of persons performing services under this Contract.

R. Facsimile Representations

At the discretion of County, County may agree to regard facsimile representations of original signatures of Contractor's authorized officers, when appearing in appropriate places on the change notices and amendments prepared pursuant to this Exhibit's Amendments, and received via communications facilities, as legally sufficient evidence that such original signatures have been affixed to change notices and amendments to this Contract, such that the Contractor need not follow up facsimile transmissions of such documents with subsequent (nonfacsimile) transmission of "original" versions of such documents.

S. Fair Labor Standards

Contractor shall comply with all applicable provisions of the Federal Fair Labor Standards Act and shall indemnify, defend, and hold harmless County and its Board, agents, officers, and employees from any and all liability, including, but not limited to, wages, overtime pay, liquidated damages, penalties, court costs, and attorneys' fees arising under any wage and hour law, including, but not limited to, the Federal Fair Labor Standards Act, for work performed by Contractor's employees for which County may be found jointly or solely liable.

T. Governing Laws, Jurisdiction, and Venue

This Contract shall be governed by, and construed in accordance with the laws of the State of California. To the maximum extent permitted by applicable law, Contractor and County agree and consent to the exclusive jurisdiction of the courts of the State of California for all purposes concerning this Contract and further agree and consent that venue of any action brought in connection with or arising out of this Contract, shall be exclusively in the County of Los Angeles.

U. Nondiscrimination and Affirmative Action

1. Contractor certifies and agrees that all persons employed by it, its affiliates, subsidiaries, or holding companies are and shall be treated equally without regard to or because of race, color, religion, ancestry, national origin, sex, age, physical or mental disability, marital status, or political affiliation, in compliance with all applicable Federal and State antidiscrimination laws and regulations.

2. Contractor shall certify to, and comply with, the provisions of Contractor's EEO Certification (Form PW-7).

3. Contractor shall take affirmative action to ensure that applicants are employed, and that employees are treated during employment, without regard to race, color, religion, ancestry, national origin, sex, age, physical or mental disability, marital status, or political affiliation, in compliance with all applicable Federal and State antidiscrimination laws and regulations. Such action shall include, but not be limited to, employment, upgrading, demotion, transfer, recruitment or recruitment advertising, layoff or termination, rates of pay or other forms of compensation, and selection of training, including apprenticeship.

4. Contractor certifies and agrees that it will deal with its subcontractors, bidders, or vendors without regard to or because of race, color, religion, ancestry, national origin, sex, age, physical or mental disability, marital status, or political affiliation.

5. Contractor certifies and agrees that it, its affiliates, subsidiaries, or holding companies shall comply with all applicable Federal and State laws and regulations to the end that no person shall, on the grounds of race, color, religion, ancestry, national origin, sex, age, physical or mental disability, marital status, or political affiliation, be excluded from participation in, be denied the benefits of, or be otherwise subjected to discrimination under this Contract or under any project, program, or activity supported by this Contract.

6. Contractor shall allow County representatives access to Contractor's employment records during regular business hours to verify compliance with the provisions of this paragraph when so requested by County.

7. If County finds that any of the above provisions have been violated, such violation shall constitute a material breach of this Contract upon which County may terminate for default or suspend this Contract. While County reserves the right to determine independently that the antidiscrimination provisions of this Contract have been violated, in addition, a determination by the California Fair Employment Practices Commission or the Federal Equal Employment Opportunity Commission that Contractor has violated

Federal or State antidiscrimination laws or regulations shall constitute a finding by County that Contractor has violated the antidiscrimination provisions of this Contract.

8. The parties agree that in the event Contractor violates any of the antidiscrimination provisions of this Contract, County shall, at its sole option, be entitled to a sum of $500 for each violation pursuant to California Civil Code Section 1671 as liquidated damages in lieu of terminating or suspending this Contract.

V. Nonexclusivity

Nothing herein is intended nor shall be construed as creating any exclusive arrangement with Contractor. This Contract shall not restrict County from acquiring similar, equal, or like goods and/or services from other entities or sources.

W. No Payment for Services Provided Following Expiration/Suspension/Termination of Contract

Contractor shall have no claim against County for payment of any money or reimbursement, of any kind whatsoever, for any service provided by Contractor after the expiration, suspension, or other termination of this Contract. Should Contractor receive any such payment, it shall immediately notify County and shall immediately repay all such funds to County. Payment by County for services rendered after expiration/suspension/termination of this Contract shall not constitute a waiver of County's right to recover such payment from Contractor. This provision shall survive the expiration/suspension/termination of this Contract.

X. Notice of Delays

Except as otherwise provided under this Contract, when either party has knowledge that any actual or potential situation is delaying or threatens to delay the timely performance of this Contract, that party shall, within one business day, give notice thereof, including all relevant information with respect thereto, to the other party.

Y. Notice of Disputes

Contractor shall bring to the attention of the Contract Manager any dispute between County and Contractor regarding the performance of services as stated in this Contract. If the Contract Manager is not able to resolve the dispute, the Director will resolve it.

Z. Notice to Employees Regarding the Federal Earned Income Credit

Contractor shall notify its employees, and shall require each subcontractor to notify its employees, that they may be eligible for the Federal Earned Income Credit under the Federal income tax laws. Such notice shall be provided in accordance with the requirements set forth in Internal Revenue Service Notice 1015 (Exhibit C).

AA. Notices

Notices desired or required to be given under these Specifications, Conditions, or Terms herein or any law now or hereafter in effect may, at the option of the party giving the same, be given by enclosing the same in a sealed envelope addressed to the party for whom intended and by depositing such envelope with postage prepaid with the United States Post Office and any such notice and the envelope containing the same shall be addressed to Contractor at its place of business, or such other place as may be hereinafter designated in writing by Contractor. The notices and envelopes containing the same to County shall be addressed to:

Chief, Administrative Services Division
County of Los Angeles Department of Public Works
P.O. Box 1460
Alhambra, CA 91802-1460

In the event of suspension or termination of this Contract, notices may also be given upon personal delivery to any person whose actual knowledge of such suspension or termination would be sufficient notice to Contractor. Actual knowledge of such suspension or termination by an individual contractor or by a copartner, if contractor is a partnership; or by the president, vice president, secretary, or general manager, if contractor is a corporation; or by the managing agent regularly in charge of the work on behalf of said contractor shall in any case be sufficient notice.

BB. Publicity

Contractor shall not disclose any details in connection with this Contract to any person or entity except as may be otherwise provided hereunder or required by law. However, in recognizing Contractor's need to identify its services and related clients to sustain itself, County shall not inhibit Contractor from publicizing its role under this Contract within the following conditions:

1. Contractor shall develop all publicity material in a professional manner.

2. During the term of this Contract, Contractor shall not, and shall not authorize another to, publish or disseminate commercial advertisements, press releases, feature articles, or other materials using the name of County without the prior written consent of the Contract Manager. County shall not unreasonably withhold such written consent.

3. Contractor may, without prior written consent of County, indicate in its proposals and sales materials that it has been awarded this Contract with County, provided that the requirements of this paragraph shall apply.

CC. Public Records Act

1. Any documents submitted by Contractor; all information obtained in connection with County's right to audit and inspect Contractor's documents, books, and accounting records pursuant to this Exhibit's Record Retention and Inspection/Audit Settlement, of this Contract; as well as those documents which were required to be submitted in response to the RFP used in the solicitation process for this Contract, become the exclusive property of County. All such documents become a matter of public record and shall be regarded as public records, except those documents that are marked "trade secret," "confidential," or "proprietary" and are deemed excluded from disclosure under Government Code 6250 et seq. (Public Records Act). County shall not in any way be liable or responsible for the disclosure of any such records including, with limitation, those so marked, if disclosure is required by law, or by an order issued by a court of competent jurisdiction.

2. In the event County is required to defend an action on a Public Records Act request for any of the aforementioned documents, information, books, records, and/or contents of a proposal marked "trade secret," "confidential," or "proprietary," Contractor agrees to defend and indemnify County from all costs and expenses, including reasonable attorney's fees, in connection with any requested action or liability arising under the Public Records Act.

DD. Record Retention and Inspection/Audit Settlement

Contractor shall maintain accurate and complete financial records of its activities and operations relating to this Contract in accordance with generally accepted accounting principles. Contractor shall also maintain accurate and complete employment and other records relating to its performance of this Contract. Contractor agrees that County, or its authorized representatives, shall have access to and the right to examine, audit, excerpt, copy, or transcribe any pertinent transaction, activity, or record relating to this Contract. All such material, including, but not limited to, all financial records, bank statements, cancelled checks, or other proof of payment, timecards, sign-in/sign-out sheets, and other time and employment records, and proprietary data and information, shall be kept and maintained by Contractor and shall be made available to County during the term of this Contract and for a period of five years thereafter unless County's written permission is given to dispose of any such material prior to such time. All such material shall be maintained by Contractor at a location in County, provided that if any such material is located outside County, then, at County's option, Contractor

shall pay County for travel, per diem, and other costs incurred by County to examine, audit, excerpt, copy, or transcribe such material at such other location.

1. In the event that an audit of Contractor is conducted specifically regarding this Contract by any Federal or State auditor, or by any auditor or accountant employed by Contractor or otherwise, then Contractor shall file a copy of such audit report with County's Auditor-Controller within 30 days of Contractor's receipt thereof, unless otherwise provided by applicable Federal or State law or under this Contract. Subject to applicable law, County shall make a reasonable effort to maintain the confidentiality of such audit report(s).

2. Failure on the part of Contractor to comply with any of the provisions of this paragraph shall constitute a material breach of this Contract upon which County may terminate for default or suspend this Contract.

3. If, at any time during the term of this Contract or within five years after the expiration or termination of this Contract, representatives of County conduct an audit of Contractor regarding the work performed under this Contract, and if such audit finds that County's dollar liability for any such work is less than payments made by County to Contractor, then the difference shall be either: a) repaid by Contractor to County by cash payment upon demand or b) at the sole option of County's Auditor-Controller, deducted from any amounts due to Contractor from County, whether under this Contract or otherwise. If such audit finds that County's dollar liability for such work is more than the payments made by County to Contractor, then the difference shall be paid to Contractor by County by cash payment, provided that in no event shall County's maximum obligation for this Contract exceed the funds appropriated by County for the purpose of this Contract.

4. In addition to the above, Contractor agrees, should County or its authorized representatives determine, in County's sole discretion, that it is necessary or appropriate to review a broader scope of Contractor's records (including, certain records related to non-County contracts) to enable County to evaluate Contractor's compliance with County's Living Wage Program, Contractor shall promptly and without delay provide to County, upon the written request of County or its authorized representatives, access to and the right to examine, audit, excerpt, copy, or transcribe any and all transactions, activities, or records relating to any of its employees who have provided services to County under this Contract, including without limitation, records relating to work performed by said employees on Contractor's non-County contracts. Contractor further acknowledges that the foregoing requirement in this paragraph relative to Contractor's employees who have provided services to County under this Contract is for the purpose of enabling County in its discretion to verify Contractor's full compliance with and adherence to California labor laws and County's Living Wage Program. All such materials and information, including, but not limited to, all financial

records, bank statements, cancelled checks or other proof of payment, timecards, sign-in/sign-out sheets, and other time and employment records, and proprietary data and information, shall be kept and maintained by Contractor and shall be made available to County during the term of this Contract and for a period of five years thereafter unless County's written permission is given to dispose of any such materials and information prior to such time. All such materials and information shall be maintained by Contractor at a location in County, provided that if any such materials and information is located outside County, then, at County's option, Contractor shall pay County for travel, per diem, and other costs incurred by County to examine, audit, excerpt, copy, or transcribe such materials and information at such other location.

EE. Recycled-Content Paper Products

Consistent with Board policy to reduce the amount of solid waste deposited at County landfills, Contractor agrees to use recycled-content paper to the maximum extent possible under this Contract.

FF. Subcontracting

The requirements of this Contract may not be subcontracted by Contractor without the advance written approval of County. Any attempt by Contractor to subcontract without the prior written consent of County may be deemed a material breach of this Contract and the County may suspend or terminate for this Contract default.

1. If Contractor desires to subcontract, Contractor shall provide the following information promptly at County's request:

   a. A description of the work to be performed by the subcontractor;

   b. A draft copy of the proposed subcontract; and

   c. Other pertinent information and/or certifications requested by County.

2. Contractor shall indemnify and hold County harmless with respect to the activities of each and every subcontractor in the same manner and to the same degree as if such subcontractor(s) were Contractor employees.

3. Contractor shall remain fully responsible for all performances required of it under this Contract, including those that the Contractor has determined to subcontract, notwithstanding County's approval of Contractor's proposed subcontract.

4. County's consent to subcontract shall not waive County's right to prior and continuing approval of any and all personnel, including subcontractor

employees, providing services under this Contract. Contractor is responsible to notify its subcontractors of this County right.

5. County's Contract Manager is authorized to act for and on behalf of County with respect to approval of any subcontract and subcontractor employees.

6. Contractor shall be solely liable and responsible for all payments or other compensation to all subcontractors and their officers, employees, agents, and successors in interest arising through services performed hereunder, notwithstanding County's consent to subcontract.

7. Contractor shall obtain certificates of insurance, which establish that the subcontractor maintains all the programs of insurance required by County from each approved subcontractor. Contractor shall ensure delivery of all such documents to Administrative Services Division, P.O. Box 1460, Alhambra, California 91802-1460, before any subcontractor employee may perform any work hereunder.

8. Employee Leasing is prohibited.

GG. Validity

If any provision of this Contract or the application thereof to any person or circumstance is held invalid, the remainder of this Contract and the application of such provision to other persons or circumstances shall not be affected thereby.

HH. Waiver

No waiver by County of any breach of any provision of this Contract shall constitute a waiver of any other breach of said provision or of any other provision of this Contract. Failure of County to enforce at anytime, or from time to time, any provision of this Contract shall not be construed as a waiver thereof.

II. Warranty Against Contingent Fees

1. Contractor warrants that no person or selling agency has been employed or retained to solicit or secure this Contract upon an agreement or understanding for a commission, percentage, brokerage, or contingent fee, excepting bona fide employees or bona fide established commercial or selling agencies maintained by Contractor for the purpose of securing business.

2. For breach of this warranty, County shall have the right, in its sole discretion, to suspend or terminate this Contract for default, deduct from amounts owing to the Contractor, or otherwise recover, the full amount of such commission, percentage, brokerage, or contingent fee.

SECTION 3

TERMINATIONS

A. Termination for Breach of Warranty to Maintain Compliance with County's Child Support Compliance Program

Failure of Contractor to maintain compliance with the requirements set forth in this Exhibit's Contractor's Warranty of Adherence to County's Child Support Compliance Program shall constitute a default under this Contract. Without limiting the rights and remedies available to County under any other provision of this Contract, failure of Contractor to cure such default within 90 calendar days of written notice shall be grounds upon which the County may suspend or terminate this Contract pursuant to this Exhibit's Termination/Suspension for Default, and pursue debarment of Contractor pursuant to Los Angeles County Code Chapter 2.202.

B. Termination/Suspension for Convenience

1. This Contract may be suspended or terminated, in whole or in part, from time to time, when such action is deemed by County, in its sole discretion, to be in its best interest. Suspension or termination of work hereunder shall be effected by notice of suspension or termination to Contractor specifying the extent to which performance of work is suspended or terminated and the date upon which such suspension or termination becomes effective. The date upon which such termination becomes effective shall be no less than 10 days after the notice is sent.

2. After receipt of a notice of suspension or termination and except as otherwise directed by County, Contractor shall:

   a. Stop work under this Contract on the date and to the extent specified in such notice; and

   b. Complete performance of such part of the work as shall not have been suspended or terminated by such notice.

3. All material including books, records, documents, or other evidence bearing on the costs and expenses of Contractor under this Contract shall be maintained by Contractor in accordance with this Exhibit's Record Retention and Inspection/Audit Settlement.

4. If this Contract is suspended or terminated, Contractor shall complete within the Director's suspension or termination date contain within the notice of suspension or termination, those items of work which are in various stages of completion, which the Director has advised the Contractor are necessary to bring the work to a timely, logical, and orderly

end. Reports, samples, and other materials prepared by Contractor under this Contract shall be delivered to County upon request and shall become the property of County.

C. Termination/Suspension for Default

1. County may, by written notice to Contractor, suspend or terminate the whole or any part of this Contract, if, in the judgment of the County:

   a. Contractor has materially breached this Contract; or

   b. Contractor fails to timely provide and/or satisfactorily perform any task, deliverable, service, or other work required under this Contract; or

   c. Contractor fails to demonstrate a high probability of timely fulfillment of performance requirements under this Contract, or of any obligations of this Contract and in either case, fails to demonstrate convincing progress toward a cure within five working days (or such longer period as County may authorize in writing) after receipt of written notice from County specifying such failure.

2. In the event County suspends or terminates this Contract in whole or in part pursuant to this paragraph, County may procure, upon such terms and in such manner, as County may deem appropriate, goods and services similar to those so suspended or terminated. Contractor shall be liable to County for any and all excess costs incurred by County, as determined by County, for such similar goods and services. Contractor shall continue the performance of this Contract to the extent not suspended or terminated under the provisions of this paragraph.

3. Except with respect to defaults of any subcontractor, Contractor shall not be liable for any excess costs of the type identified in subparagraph "2" above, if its failure to perform this Contract arises out of causes beyond the control and without the fault or negligence of Contractor. Such causes may include, but are not limited to, acts of God or of the public enemy, acts of County in either its sovereign or contractual capacity, acts of the Federal or State government in its sovereign capacity, fires, floods, epidemics, quarantine restrictions, strikes, freight embargoes, and unusually severe weather; but in every case, the failure to perform must be beyond the control and without the fault or negligence of Contractor. If the failure to perform is caused by the default of a subcontractor, and if such default arises out of causes beyond the control of both Contractor and subcontractor, and without the fault or negligence of either of them, Contractor shall not be liable for any such excess costs for failure to perform, unless the goods or services to be furnished by the subcontractor

were obtainable from other sources in sufficient time to permit Contractor to meet the required delivery schedule.

4. If, after County has given notice of termination under the provisions of this paragraph, it is determined that Contractor was not in default under the provisions of this paragraph or that the default was excusable under the provisions of this paragraph, the rights and obligations of the parties shall be the same as if the notice of termination had been issued pursuant to this Exhibit's Termination for Convenience.

5. The rights and remedies of County provided in this paragraph shall not be exclusive and are in addition to any other rights and remedies provided by law or under this Contract.

6. As used herein, the terms "subcontractor" and "subcontractors" mean subcontractor at any tier.

D. Termination for Improper Consideration

1. County may, by written notice to Contractor, immediately terminate the right of Contractor to proceed under this Contract if it is found that consideration, in any form, was offered or given by Contractor, either directly or through an intermediary, to any County officer, employee, or agent with the intent of securing this Contract or securing favorable treatment with respect to the award, amendment, extension of this Contract, or the making of any determinations with respect to Contractor's performance pursuant to this Contract. In the event of such termination, County shall be entitled to pursue that same remedies against Contractor as it could pursue in the event of default by Contractor.

2. Contractor shall immediately report any attempt by a County officer or employee to solicit such improper consideration. The report shall be made either to County manager charged with the supervision of the employee or to County Auditor-Controller's Employee Fraud Hotline at (800) 554-6861.

3. Among other items, such improper consideration may take the form of cash; discounts; services; the provision of travel; entertainment; or tangible gifts.

E. Termination/Suspension for Insolvency

1. County may suspend or terminate this Contract forthwith in the event of the occurrence of any of the following:

   a. Insolvency of Contractor. Contractor shall be deemed to be insolvent if it has ceased to pay its debts for at least 60 days in the ordinary course of business or cannot pay its debts as they become due,

whether or not a petition has been filed under the Federal Bankruptcy Code, and whether or not Contractor is insolvent within the meaning of the Federal Bankruptcy Code;

b. The filing of a voluntary or involuntary bankruptcy petition relative to Contractor under the Federal Bankruptcy Code;

c. The appointment of a bankruptcy Receiver or Trustee for Contractor; or

d. The execution by Contractor of a general assignment for the benefits of creditors.

2. The rights and remedies of County provided in this paragraph shall not be exclusive and are in addition to any other rights and remedies provided by law or under this Contract.

F. Termination for Nonadherence to County Lobbyists Ordinance

Contractor, and each County lobbyist or County lobbying firm as defined in Los Angeles County Code Section 2.160.010, retained by Contractor, shall fully comply with County's Lobbyist Ordinance, Los Angeles County Code Chapter 2.160. Failure on the part of Contractor or any County Lobbyists or County Lobbying firm retained by Contractor to fully comply with County's Lobbyist Ordinance shall constitute a material breach of this Contract, upon which County may in its sole discretion, immediately suspend or terminate for default or suspend this Contract.

G. Termination/Suspension for Nonappropriation of Funds

Notwithstanding any other provision of this Contract, County shall not be obligated for Contractor's performance hereunder or by any provision of this Contract during any of County's future fiscal years unless and until the Board appropriates funds for this Contract in County's budget for each such future fiscal year. In the event that funds are not appropriated for this Contract, then this Contract may be suspended or terminated as of June 30 of the last fiscal year for which funds were appropriated. County will notify Contractor in writing of any such nonallocation of funds at the earliest possible date.

SECTION 4

GENERAL CONDITIONS OF CONTRACT WORK

A. Authority of Public Works and Inspection

The Director will have the final authority in all matters affecting the work covered by this Contract's Terms, Requirement, Conditions, and Specifications. On all questions relating to work acceptability or interpretations of these Terms, Requirements, Conditions, and Specifications, the decision of the Director will be final.

B. Cooperation

Contractor shall cooperate with Public Works' forces engaged in any other activities at the jobsite. Contractor shall carry out all work in a diligent manner and according to instructions of the Director.

C. Cooperation and Collateral Work

Contractor shall perform work as directed by the Director. The Director will be supported by other Public Works personnel in assuring satisfactory performance of the work under these Specifications and that satisfactory contract controls and conditions are maintained.

D. Equipment, Labor, Supervision, and Materials

All equipment, labor, supervision, and materials required to accomplish this Contract, except as might be specifically outlined in other sections, shall be provided by Contractor.

E. Gratuitous Work

Contractor agrees that should work be performed outside the Scope of Work indicated and without Public Works' prior written approval in accordance with this Exhibit's Amendments, such work shall be deemed to be a gratuitous effort by Contractor, and Contractor shall have no claim, therefor, against County.

F. Jobsite Safety

Contractor shall be solely responsible for ensuring that all work performed under this Contract is performed in strict compliance with all applicable Federal, State, and local occupational safety regulations. Contractor shall provide at its expense all safeguards, safety devices, and protective equipment and shall take any and all actions appropriate to providing a safe jobsite.

G. Labor

No person shall be employed on any work under this Contract who is found to be intemperate, troublesome, disorderly, or is otherwise objectionable to Public Works. Any such person shall be reassigned immediately and not again employed on Public Works' projects or providing services.

H. Labor Law Compliance

Contractor, its agents, and employees shall be bound by and shall comply with all applicable provisions of the Labor Code of the State of California as well as all other applicable Federal, State, and local laws related to labor. Contractor shall comply with Labor Code Section 1777.5 with respect to the employment of apprentices.

I. Overtime

Eight hours labor constitutes a legal day's work. Work in excess thereof, or greater than 40 hours during any one week, shall be permitted only as authorized by and in accordance with Labor Code Section 1815 et seq.

J. Permits/Licenses

Contractor shall be fully responsible for possessing or obtaining all permits/licenses, except as might be specifically outlined in other sections, from the appropriate Federal, State, or local authorities relating to work to be performed under this Contract.

K. Prohibition Against Use of Child Labor

1. Contractor shall:

   a. Not knowingly sell or supply to County any products, goods, supply, or other personal property manufactured in violation of child labor standards set by the International Labor Organization through its 1973 Convention Concerning Minimum Age for Employment;

   b. Upon request by County, identify the country/countries of origin of any products, goods, supplies, or other personal property Contractor sells or supplies to County;

   c. Upon request by County, provide to County the manufacturer's certification of compliance with all international child labor conventions; and

   d. Should County discover that any products, goods, supplies, or other personal property sold or supplied by Contractor to County are produced in violation of any international child labor

conventions, Contractor shall immediately provide an alternative, compliant source of supply.

2. Failure by Contractor to comply with provisions of this paragraph will constitute a material breach of this Contract and will be grounds for immediate suspension or termination of this Contract for default.

L. Public Convenience

Contractor shall conduct operations to cause the least possible obstruction and inconvenience to public traffic or disruption to the peace and quiet of the area within which the work is being performed.

M. Public Safety

It shall be Contractor's responsibility to maintain security against public hazards at all times while performing work at Public Works' jobsites.

N. Quality of Work

Contractor shall provide the County high and consistent quality work under this Contract and which is at least equivalent to that which Contractor provides to all other clients it serves. All work shall be executed by experienced and well-trained workers. All work shall be under supervision of a well-qualified supervisor. Contractor also agrees that work shall be furnished in a professional manner and according to these Specifications.

O. Quantities of Work

Contractor shall be allowed no claims for anticipated profits or for any damages of any sort because of any difference between the work estimated by Contractor in responding to County's solicitation and actual quantities of work done under this Contract or for work decreased or eliminated by County.

P. Safety Requirements

Contractor shall be responsible for the safety of equipment, material, and personnel under Contractor's jurisdiction during the work.

Q. Storage of Material and Equipment

Contractor shall not store material or equipment at the jobsite, except as might be specifically authorized by this Contract. County will not be liable or responsible for any damage, by whatever means, or for the theft of Contractor's material or equipment from any jobsite.

R. Transportation

County will not provide transportation to and from the jobsite and will not provide travel around the limits of the jobsite.

S. Work Area Controls

1. Contractor shall comply with all applicable laws and regulations. Contractor shall maintain work area in a neat, orderly, clean, and safe manner. Contractor shall avoid spreading out equipment excessively. Location and layout of all equipment and materials at each jobsite will be subject to the Contract Manager's approval.

2. Contractor shall be responsible for the security of any and all of Public Works/County facilities in its care. Contractor shall provide protection against vandalism and accidental and malicious damage, both during working and nonworking hours.

SECTION 5

INDEMNIFICATION AND INSURANCE REQUIREMENTS

A. Independent Contractor Status

1. This Contract is by and between County and Contractor and is not intended, and shall not be construed, to create the relationship of agent, servant, employee, partnership, joint venture, or association, as between County and Contractor. The employees and agents of one party shall not be, or be construed to be, the employees or agents of the other party for any purpose whatsoever.

2. Contractor shall be solely liable and responsible for providing to, or on behalf of, all persons performing work pursuant to this Contract all compensation and benefits. County shall have no liability or responsibility for the payment of any salaries, wages, unemployment benefits, disability benefits, Federal, State, or local taxes, or other compensation, benefits, or taxes for any personnel provided by or on behalf of Contractor.

3. Contractor understands and agrees that all persons performing work pursuant to this Contract are, for purposes of Workers' Compensation liability, solely employees of Contractor and not employees of County. Contractor shall be solely liable and responsible for furnishing any and all Workers' Compensation benefits to any person as a result of any injuries arising from or connected with any work performed by or on behalf of Contractor pursuant to this Contract.

B. Indemnification

Contractor shall indemnify, defend, and hold harmless County, its Special Districts, elected and appointed officers, employees, and agents from and against any and all liability, including, but not limited to, demands, claims, actions, fees, costs, and expenses of any nature whatsoever (including attorney and expert witness fees), arising from or connected with Contractor's acts and/or omissions arising from and/or relating to this Contract.

C. Workplace Safety Indemnification

In addition to and without limiting the indemnification required by this Exhibit's Section 5.B (above), and to the extent allowed by law, Contractor agrees to defend, indemnify, and hold harmless County, its Board, Special Districts, officers, employees, and agents from and against any and all investigations, complaints, citations, liability, expense (including defense costs and legal fees), claims, and/or causes of action for damages of any nature whatsoever, including, but not limited to, injury or death to employees of Contractor, its subcontractors or County, attributable to any alleged act or omission of Contractor and/or its subcontractors

which is in violation of any Cal/OSHA regulation. The obligation to defend, indemnify, and hold harmless County includes all investigations and proceedings associated with purported violations of Section 336.10 of Title 8 of the California Code of Regulations pertaining to multiemployer worksites. Contractor shall not be obligated to indemnify for liability and expenses arising from the active negligence of County. County may deduct from any payment otherwise due Contractor any costs incurred or anticipated to be incurred by County, including legal fees and staff costs, associated with any investigation or enforcement proceeding brought by Cal/OSHA arising out of the work being performed by Contractor under this Contract.

D. General Insurance Requirements

1. Without limiting Contractor's indemnification of County and during the term of this Contract, Contractor shall provide and maintain, and shall require all of its subcontractors to maintain, the following programs of insurance specified in this Contract. Such insurance shall be primary to and not contributing with any other insurance or self-insurance programs maintained by County. Such coverage shall be provided and maintained at Contractor's own expense.

2. Evidence of Insurance - Certificate(s) or other evidence of coverage satisfactory to County shall be delivered to Administrative Services Division, P.O. Box 1460, Alhambra, California 91802-1460, prior to commencing work under this Contract. Such certificates or other evidence shall:

   a. Specifically identify this Contract;

   b. Clearly evidence all coverage required in this Contract;

   c. Contain the express condition that County is to be given written notice by mail at least 30 days in advance of cancellation for all policies evidenced on the certificate of insurance;

   d. Include copies of the additional insured endorsement to the commercial general liability policies, adding County, its Special Districts, its officials, officers, and employees as insureds for all activities arising from this Contract; and

   e. Identify any deductibles or self-insured retentions for County's approval. County retains the right to require Contractor to reduce or eliminate such deductibles or self-insurance retentions as they apply to County, or require Contractor to provide a bond guaranteeing payment of all such retained losses and related costs, including, but not limited to, expenses or fees, or both, related to investigations, claims administrations, and legal defense. Such bond shall be executed by a corporate surety licensed to transact business in the State of California.

3. Insurer Financial Rating: Insurance is to be provided by an insurance company acceptable to County with an A. M. Best rating of not less than A:VII, unless otherwise approved by County.

4. Failure to Maintain Coverage: Failure by Contractor to maintain the required insurance, or to provide evidence of insurance coverage acceptable to County, shall constitute a material breach of this Contract upon which County may immediately terminate or suspend this Contract. County, at its sole option, may obtain damages from Contractor resulting from said breach. Alternatively, County may purchase such required insurance coverage, and without further notice to Contractor, County may deduct from sums due to Contractor any premium costs advanced by County for such insurance.

5. Notification of Incidents, Claims, or Suits: Contractor shall report to County's Contract Manager:

   a. Any accident or incident relating to work performed under this Contract which involves injury or property damage which may result in the filing of a claim or lawsuit against Contractor and/or County. Such report shall be made in writing within 24 hours of occurrence.

   b. Any third-party claim or lawsuit filed against Contractor arising from or related to services performed by Contractor under this Contract.

   c. Any injury to a Contractor's employee which occurs on County property. This report shall be submitted on a County "Non-employee Injury Report" to the Contract Manager.

   d. Any loss, disappearance, destruction, misuse, or theft of any kind whatsoever of County property, monies, or securities entrusted to Contractor under the terms of this Contract.

E. <u>Compensation for County Costs</u>

In the event that Contractor fails to comply with any of the indemnification or insurance requirements of this Contract, and such failure to comply results in any costs to County, Contractor shall pay full compensation for all costs incurred by County.

F. <u>Insurance Coverage Requirements for Subcontractors</u>

Contractor shall ensure any and all subcontractors performing services under this Contract meet the insurance requirements of this Contract by either:

1. Contractor providing evidence of insurance covering the activities of subcontractor; or

2. Contractor providing evidence submitted by subcontractors evidencing that subcontractors maintain the required insurance coverage. County retains the right to obtain copies of evidence of subcontractor insurance coverage at any time.

G. Insurance Coverage Requirements

1. General Liability insurance (written on ISO policy form CG 00 01 or its equivalent) with limits of not less than the following. (Can be met by a combination of primary and excess insurance coverage):

a.	General Aggregate:	$2 million
b.	Products/Completed Operations Aggregate:	$1 million
c.	Personal and Advertising Injury:	$1 million
d.	Each Occurrence:	$1 million

2. Automobile Liability insurance (written on ISO policy form CA 00 01 or its equivalent) with a limit of liability of not less than $1 million for each accident. Such insurance shall include coverage for all "owned," "nonowned," and "hired" vehicles, or coverage for "any auto." (Can be met by a combination of primary and excess insurance coverage):

3. Workers' Compensation and Employers' Liability insurance providing workers' compensation benefits, as required by the Labor Code of the State of California or by any other state, and for which Contractor is responsible. If Contractor's employees will be engaged in maritime employment, coverage shall provide workers' compensation benefits as required by the U.S. Longshore and Harbor Workers' Compensation Act, Jones Act, or any other Federal law for which Contractor is responsible.

   In all cases, the above insurance also shall include Employers' Liability coverage with limits of not less than the following:

a.	Each Accident:	$1 million
b.	Disease - policy limit:	$1 million
c.	Disease - each employee:	$1 million

   As a condition precedent to its performance pursuant to this Contract, Contractor, by and through its execution of this Contract, certifies that it is aware of, and understands, the provisions of Section 3700 of the Labor Code, which requires every employer to be insured against liability of Workers' Compensation or to undertake self-insurance in accordance with

those provisions before commencing the performance of work under this Contract, and agrees to fully comply with said provisions.

SECTION 6

CONTRACTOR RESPONSIBILITY AND DEBARMENT

A. Responsible Contractor

A responsible Contractor is a Contractor who has demonstrated the attribute of trustworthiness as well as quality, fitness, capacity, and experience to satisfactorily perform the contract. It is County's policy to conduct business only with responsible contractors.

B. Chapter 2.202 of County Code

Contractor is hereby notified that, in accordance with Chapter 2.202 of County Code, if County acquires information concerning the performance of Contractor on this or other contracts which indicates that Contractor is not responsible, County may, in addition to other remedies provided in this Contract, debar Contractor from bidding or proposing on, being awarded, and/or performing work on County contracts for a specified period of time, which generally will not exceed five years but may exceed five years or be permanent if warranted by the circumstances, and suspend or terminate any or all existing contracts Contractor may have with County.

C. Nonresponsible Contractor

County may debar a contractor if the Board finds, in its discretion, that Contractor has done any of the following: (1) violated any term of a contract with County or a nonprofit corporation created by County; (2) committed an act or omission which negatively reflects on Contractor's quality, fitness, or capacity to perform a contract with County, any other public entity, or a nonprofit corporation created by County, or engaged in a pattern or practice which negatively reflects on same; (3) committed an act or offense which indicates a lack of business integrity or business honesty; or (4) made or submitted a false claim against County or any other public entity.

D. Contractor Hearing Board

1. If there is evidence that Contractor may be subject to debarment, Public Works will notify Contractor in writing of the evidence which is the basis for the proposed debarment and will advise Contractor of the scheduled date for a debarment hearing before Contractor Hearing Board.

2. Contractor Hearing Board will conduct a hearing where evidence on the proposed debarment is presented. Contractor and/or Contractor's representative shall be given an opportunity to submit evidence at that hearing. After the hearing, Contractor Hearing Board will prepare a tentative proposed decision, which shall contain a recommendation regarding whether Contractor should be debarred, and, if so, the

appropriate length of time of the debarment. Contractor and Public Works shall be provided an opportunity to object to the tentative proposed decision prior to its presentation to the Board.

3. After consideration of any objections, or if no objections are submitted, a record of the hearing, the proposed decision, and any other recommendation of Contractor Hearing Board shall be presented to the Board. The Board shall have the right to modify, deny, or adopt the proposed decision and recommendation of Contractor Hearing Board.

4. If a contractor has been debarred for a period longer than five years, that contractor may, after the debarment has been in effect for at least five years, submit a written request for review of the debarment determination to reduce the period of debarment or terminate the debarment. County may, in its discretion, reduce the period of debarment or terminate the debarment if it finds that Contractor has adequately demonstrated one or more of the following: (1) elimination of the grounds for which the debarment was imposed; (2) a bona fide change in ownership or management; (3) material evidence discovered after debarment was imposed; or (4) any other reason that is in the best interests of County.

5. Contractor Hearing Board will consider a request for review of a debarment determination only where (1) Contractor has been debarred for a period longer than five years; (2) the debarment has been in effect for at least five years; and (3) the request is in writing, states one or more of the grounds for reduction of the debarment period or termination of the debarment, and includes supporting documentation. Upon receiving an appropriate request, Contractor Hearing Board will provide notice of the hearing on the request. At the hearing, Contractor Hearing Board shall conduct a hearing where evidence on the proposed reduction of debarment period or termination of debarment is presented. This hearing shall be conducted and the request for review decided by Contractor Hearing Board pursuant to the same procedure as for a debarment hearing.

6. Contractor Hearing Board's proposed decision shall contain a recommendation on the request to reduce the period of debarment or terminate the debarment. Contractor Hearing Board shall present its proposed decision and recommendation to the Board. The Board shall have the right to modify, deny, or adopt the proposed decision and recommendation of Contractor Hearing Board.

E. <u>Subcontractors of Contractor</u>

These terms shall also apply to subcontractors of County contractors.

SECTION 7

COMPLIANCE WITH COUNTY'S JURY SERVICE PROGRAM

A. Jury Service Program

This Contract is subject to the provisions of County's ordinance entitled Contractor Employee Jury Service (Jury Service Program) as codified in Sections 2.203.010 through 2.203.090 of the Los Angeles County Code.

B. Written Employee Jury Service Policy

1. Unless Contractor has demonstrated to County's satisfaction either that Contractor is not a "Contractor" as defined under the Jury Service Program (Section 2.203.020 of County Code) or that Contractor qualifies for an exception to the Jury Service Program (Section 2.203.070 of County Code), Contractor shall have and adhere to a written policy that provides that its Employees shall receive from Contractor, on an annual basis, no less than five days of regular pay for actual jury service. The policy may provide that Employee deposit any fees received for such jury service with Contractor or that Contractor deduct from the Employee's regular pay the fees received for jury service.

2. For purposes of this Section, "Contractor" means a person, partnership, corporation, or other entity which has a contract with County or a subcontract with a County contractor and has received or will receive an aggregate sum of $50,000 or more in any 12-month period under one or more County contracts or subcontracts. "Employee" means any California resident who is a full-time employee of Contractor. "Full-time" means 40 hours or more worked per week, or a lesser number of hours if: 1) the lesser number is a recognized industry standard as determined by County, or 2) Contractor has a long-standing practice that defines the lesser number of hours as full-time. Full-time employees providing short-term, temporary services of 90 days or less within a 12-month period are not considered full-time for purposes of the Jury Service Program. If Contractor uses any subcontractor to perform services for County under this Contract, the subcontractor shall also be subject to the provisions of this Section. The provisions of this Section shall be inserted into any such subcontract agreement and a copy of the Jury Service Program shall be attached to the agreement.

3. If Contractor is not required to comply with the Jury Service Program when this Contract commences, Contractor shall have a continuing obligation to review the applicability of its "exception status" from the Jury Service Program, and Contractor shall immediately notify County if Contractor at any time either comes within the Jury Service Program's definition of "Contractor" or if Contractor no longer qualifies for an exception to the

Jury Service Program. In either event, Contractor shall immediately implement a written policy consistent with the Jury Service Program. County may also require, at any time during this Contract and at its sole discretion, that Contractor demonstrate to County's satisfaction that Contractor either continues to remain outside of the Jury Service Program's definition of "Contractor" and/or that Contractor continues to qualify for an exception to the Jury Service Program.

4. Contractor's violation of this Section of this Contract may constitute a material breach of this Contract. In the event of such material breach, County may, in its sole discretion, suspend or terminate this Contract and/or bar Contractor from the award of future County contracts for a period of time consistent with the seriousness of the breach.

SECTION 8

SAFELY SURRENDERED BABY LAW PROGRAM

A. Contractor's Acknowledgment of County's Commitment to the Safely Surrendered Baby Law

Contractor acknowledges that County places a high priority on the implementation of the Safely Surrendered Baby Law. Contractor understands that it is County's policy to encourage all County contractors to voluntarily post County's "Safely Surrendered Baby Law" poster in a prominent position at Contractor's place of business. Contractor will also encourage its subcontractors, if any, to post this poster in a prominent position in the subcontractor's place of business. County's Department of Children and Family Services will supply Contractor with the poster to be used. Information on how to receive the poster can be found on the Internet at www.babysafela.org.

B. Notice to Employees Regarding the Safely Surrendered Baby Law

Contractor shall notify and provide to its employees, and shall require each subcontractor to notify and provide to its employees, a fact sheet regarding the Safely Surrendered Baby Law, its implementation in County, and where and how to safely surrender a baby. The fact sheet is set forth in Exhibit D of this Contract and is also available on the Internet at www.babysafela.org for printing purposes.

SECTION 9

COMPLIANCE WITH COUNTY'S LIVING WAGE PROGRAM

A. Living Wage Program

This Contract is subject to the provisions of County's ordinance entitled Living Wage Program as codified in Sections 2.201.010 through 2.201.100 of the Los Angeles County Code, a copy of which is attached hereto as Form LW-1 and incorporated by reference into and made a part of this Contract.

B. Payment of Living Wage Rates

1. Unless Contractor has demonstrated to County's satisfaction either that Contractor is not an "Employer" as defined under the Living Wage Program (Section 2.201.020 of County Code) or that Contractor qualifies for an exception to the Living Wage Program (Section 2.201.090 of County Code), Contractor shall pay its Employees no less than the applicable hourly living wage rate, as set forth immediately below, for the Employees' services provided to County, including, without limitation, "Travel Time" as defined below in subsection 5 of this Section 9.B under this Contract:

   a. Not less than $11.84 per hour if, in addition to the per-hour wage, Contractor contributes less than $2.20 per hour towards the provision of bona fide health care benefits for its Employees and any dependents; or

   b. Not less than $9.64 per hour if, in addition to the per-hour wage, Contractor contributes at least $2.20 per hour towards the provision of bona fide health care benefits for its Employees and any dependents. Contractor will be deemed to have contributed $2.20 per hour towards the provision of bona fide health care benefits if the benefits are provided through County Department of Health Services Community Health Plan. If, at any time during this Contract, Contractor contributes less than $2.20 per hour towards the provision of bona fide health care benefits, Contractor shall be required to pay its Employees the higher hourly living wage rate.

2. For purposes of this Section, "Contractor" includes any subcontractor engaged by Contractor to perform services for County under this Contract. If Contractor uses any subcontractor to perform services for County under this Contract, the subcontractor shall be subject to the provisions of this Section. The provisions of this Section shall be inserted into any such subcontract and a copy of the Living Wage Program shall be attached to the subcontract. "Employee" means any individual who is an employee of Contractor under the laws of California, and who is providing full-time services to Contractor, some or all of which are provided to County under this Contract. "Full-time" means a minimum of 40 hours worked per week, or a lesser number of

hours, if the lesser number is a recognized industry standard and is approved as such by County; however, fewer than 35 hours worked per week will not, in any event, be considered full-time.

3. If Contractor is required to pay a living wage when this Contract commences, Contractor shall continue to pay a living wage for the entire term of this Contract, including any option period.

4. If Contractor is not required to pay a living wage when this Contract commences, Contractor shall have a continuing obligation to review the applicability of its "exemption status" from the living wage requirement. Contractor shall immediately notify County if Contractor at any time either comes within the Living Wage Program's definition of "Employer" or if Contractor no longer qualifies for an exception to the Living Wage Program. In either event, Contractor shall immediately be required to commence paying the living wage and shall be obligated to pay the living wage for the remaining term of this Contract, including any option period. County may also require, at any time during this Contract and at its sole discretion, that Contractor demonstrate to County's satisfaction that Contractor either continues to remain outside of the Living Wage Program's definition of "Employer" and/or that Contractor continues to qualify for an exception to the Living Wage Program. Unless Contractor satisfies this requirement within the time frame permitted by County, Contractor shall immediately be required to pay the living wage for the remaining term of this Contract, including any option period.

5. For purposes of Contractor's obligation to pay its Employees the applicable hourly living wage rate under this Contract, "Travel Time" shall have the following two meanings, as applicable: 1) With respect to travel by an Employee that is undertaken in connection with this Contract, Travel Time shall mean any period during which an Employee physically travels to or from a County facility if Contractor pays the Employee any amount for that time or if California law requires Contractor to pay the Employee any amount for that time; and 2) With respect to travel by an Employee between County facilities that are subject to two different contracts between Contractor and County (of which both contracts are subject to the Living Wage Program), Travel Time shall mean any period during which an Employee physically travels to or from, or between such County facilities if Contractor pays the Employee any amount for that time or if California law requires Contractor to pay the Employee any amount for that time.

C. <u>Contractor's Submittal of Certified Monitoring Reports</u>

Contractor shall submit to County certified monitoring reports at a frequency instructed by County. The certified monitoring reports shall list all of Contractor's Employees during the reporting period. The certified monitoring reports shall also verify the number of hours worked, the hourly wage rate paid, and the amount paid

by Contractor for health benefits, if any, for each of its Employees. The certified monitoring reports shall also state the name and identification number of Contractor's current health care benefits plan, and Contractor's portion of the premiums paid as well as the portion paid by each Employee. All certified monitoring reports shall be submitted on forms provided by County, or any other form approved by County which contains the above information. County reserves the right to request any additional information it may deem necessary. If County requests additional information, Contractor shall promptly provide such information. Contractor, through one of its officers, shall certify under penalty of perjury that the information contained in each certified monitoring report is true and accurate.

D. Contractor's Ongoing Obligation to Report Labor Law/Payroll Violations and Claims

During the term of this Contract, if Contractor becomes aware of any labor law/payroll violations or any complaint, investigation, or proceeding ("claim") concerning any alleged labor law/payroll violation (including, but not limited to, any violation or claim pertaining to wages, hours, and working conditions, such as minimum wage, prevailing wage, living wage, the Fair Labor Standards Act, employment of minors, or unlawful employment discrimination), Contractor shall immediately inform County of any pertinent facts known by Contractor regarding the same. This disclosure obligation is not limited to any labor law/payroll violation or claim arising out of Contractor's contract with County, but instead applies to any labor law/payroll violation or claim arising out of any of Contractor's operation in California.

E. County Auditing of Contractor Records

Upon a minimum of 24 hours' written notice, County may audit, at Contractor's place of business, any of Contractor's records pertaining to this Contract, including all documents and information relating to the certified monitoring reports. Contractor is required to maintain all such records in California until the expiration of five years from the date of final payment under this Contract. Authorized agents of County shall have access to all such records during normal business hours for the entire period that records are to be maintained.

F. Notifications to Employees

Contractor shall place County-provided living wage posters at each of Contractor's place of business and locations where Contractor's Employees are working. Contractor shall also distribute County-provided notices to each of its Employees at least once per year. Contractor shall translate posters and handouts into Spanish and any other language spoken by a significant number of Employees.

G. Enforcement and Remedies

If Contractor fails to comply with the requirements of this Section, County shall have the rights and remedies described in this Section in addition to any rights and remedies provided by law or equity.

1. Remedies for Submission of Late or Incomplete Certified Monitoring Reports: If Contractor submits a certified monitoring report to County after the date it is due or if the report submitted does not contain all of the required information or is inaccurate or is not properly certified, any such deficiency shall constitute a breach of this Contract. In the event of any such breach, County may, in its sole discretion, exercise any or all of the following rights/remedies:

   a. Withholding of Payment: If Contractor fails to submit accurate, complete, timely, and properly certified monitoring reports, County may withhold from payment to Contractor up to the full amount of any invoice that would otherwise be due, until Contractor has satisfied the concerns of County, which may include required submittal of revised certified monitoring reports or additional supporting documentation.

   b. Liquidated Damages: It is mutually understood and agreed that Contractor's failure to submit an accurate, complete, timely, and properly certified monitoring report will result in damages being sustained by County. It is also understood and agreed that the nature and amount of the damages will be extremely difficult and impractical to fix; that the liquidated damages set forth herein are the nearest and most exact measure of damages for such breach that can be fixed at this time; and that the liquidated damages are not intended as a penalty or forfeiture for Contractor's breach. Therefore, in the event that a certified monitoring report is deficient, including, but not limited to, being late, inaccurate, incomplete, or uncertified, it is agreed that County may, in its sole discretion, assess against Contractor liquidated damages in the amount of $100 per monitoring report for each day until County has been provided with a properly prepared, complete, and certified monitoring report. County may deduct any assessed liquidated damages from any payments otherwise due to Contractor.

   c. Termination/Suspension: Contractor's failure to submit an accurate, complete, timely, and properly certified monitoring report may constitute a material breach of this Contract. In the event of such material breach, County may, in its sole discretion, suspend or terminate this Contract.

2. Remedies for Payment of Less Than the Required Living Wage: If Contractor fails to pay any Employee at least the applicable hourly living

wage rate, such deficiency shall constitute a breach of this Contract. In the event of any such breach, County may, in its sole discretion, exercise any or all of the following rights/remedies:

a. Withholding Payment: If Contractor fails to pay one or more of its Employees at least the applicable hourly living wage rate, County may withhold from any payment otherwise due to Contractor the aggregate difference between the living wage amounts Contractor was required to pay its Employees for a given pay period and the amount actually paid to the Employees for that pay period. County may withhold said amount until Contractor has satisfied County that any underpayment has been cured, which may include required submittal of revised certified monitoring reports or additional supporting documentation.

b. Liquidated Damages: It is mutually understood and agreed that Contractor's failure to pay any of its Employees at least the applicable hourly living wage rate will result in damages being sustained by County. It is also understood and agreed that the nature and amount of the damages will be extremely difficult and impractical to fix; that the liquidated damages set forth herein are the nearest and most exact measure of damages for such breach that can be fixed at this time; and that the liquidated damages are not intended as a penalty or forfeiture for Contractor's breach. Therefore, it is agreed that County may, in its sole discretion, assess against Contractor liquidated damages of $50 per Employee per day for each and every instance of an underpayment to an Employee. County may deduct any assessed liquidated damages from any payments otherwise due to Contractor.

c. Termination/Suspension: Contractor's failure to pay any of its Employees the applicable hourly living wage rate may constitute a material breach of this Contract. In the event of such material breach, County may, in its sole discretion, suspend or terminate this Contract.

3. Debarment: In the event Contractor breaches a requirement of this Section, County may, in its sole discretion, bar Contractor from the award of future County contracts for a period of time consistent with the seriousness of the breach, in accordance with Los Angeles County Code Section 2.202, Determinations of Contractor Nonresponsibility and Contractor Debarment.

H. <u>Use of Full-Time Employees</u>

Contractor shall assign and use full-time Employees of Contractor to provide services under this Contract unless Contractor can demonstrate to the satisfaction of County that it is necessary to use non-full-time Employees based on staffing

efficiency or County requirements for the work to be performed under this Contract. It is understood and agreed that Contractor shall not, under any circumstance, use non-full-time Employees for services provided under this Contract unless and until County has provided written authorization for the use of same. Contractor submitted with its proposal a full-time-Employee staffing plan. If Contractor changes its full-time-Employee staffing plan, Contractor shall immediately provide a copy of the new staffing plan to County.

I. Contractor Retaliation Prohibited

Contractor and/or its Employees shall not take any adverse action which would result in the loss of any benefit of employment, any contract benefit, or any statutory benefit for any Employee, person, or entity who has reported a violation of the Living Wage Program to County or to any other public or private agency, entity, or person. A violation of the provisions of this paragraph may constitute a material breach of this Contract. In the event of such material breach, County may, in its sole discretion, suspend or terminate this Contract.

J. Contractor Standards

During the term of this Contract, Contractor shall maintain business stability, integrity in employee relations, and the financial ability to pay a living wage to its employees. If requested to do so by County, Contractor shall demonstrate to the satisfaction of County that Contractor is complying with this requirement.

K. Neutrality in Labor Relations

Contractor shall not use any consideration received under this Contract to hinder, or to further, organization of, or collective bargaining activities by or on behalf of Contractor's employees, except that this restriction shall not apply to any expenditure made in the course of good faith collective bargaining, or to any expenditure pursuant to obligations incurred under a bona fide collective bargaining agreement, or which would otherwise be permitted under the provisions of the National Labor Relations Act.

SECTION 10

TRANSITIONAL JOB OPPORTUNITIES PREFERENCE PROGRAM

This Contract is subject to the provisions of the County's ordinance entitled Transitional Job Opportunities Preference Program, as codified in Chapter 2.205 of the Los Angeles County Code.

Contractor shall not knowingly and with the intent to defraud, fraudulently obtain, retain, attempt to obtain or retain, or aid another in fraudulently obtaining or retaining or attempting to obtain or retain certification as a Transitional Job Opportunity vendor.

Contractor shall not willfully and knowingly make a false statement with the intent to defraud, whether by affidavit, report, or other representation, to a County official or employee for the purpose of influencing the certification or denial of certification of any entity as a Transitional Job Opportunities vendor.

If Contractor has obtained County certification as a Transitional Job Opportunities vendor by reason of having furnished incorrect supporting information or by reason of having withheld information, and which knew, or should have known, the information furnished was incorrect or the information withheld was relevant to its request for certification, and which by reason of such certification has been awarded this Contract to which it would not otherwise have been entitled, shall:

1. Pay to the County any difference between the contract amount and what the County's costs would have been if the contract had been properly awarded;

2. In addition to the amount described in subdivision (1), be assessed a penalty in the amount of not more than ten percent of the amount of this Contract; and

3. Be subject to the provisions of Chapter 2.202 of the Los Angeles County Code (Determinations of Contractor Nonresponsibility and Contractor Debarment).

The above penalties shall also apply to any entity that has previously obtained proper certification, however, as a result of a change in their status would no longer be eligible for certification, and fails to notify Public Works of this information prior to responding to a solicitation or accepting a contract award.

SECTION 11

LOCAL SMALL BUSINESS ENTERPRISE (SBE) PREFERENCE PROGRAM

A. This Contract is subject to the provisions of County's ordinance entitled Local Small Business Enterprise Preference Program, as codified in Chapter 2.204 of the Los Angeles County Code.

B. Contractor shall not knowingly and with the intent to defraud, fraudulently obtain, retain, attempt to obtain or retain, or aid another in fraudulently obtaining or retaining or attempting to obtain or retain certification as a Local Small Business Enterprise.

C. Contractor shall not willfully and knowingly make a false statement with the intent to defraud, whether by affidavit, report, or other representation, to a County official or employee for the purpose of influencing the certification or denial of certification of any entity as a Local Small Business Enterprise.

D. If Contractor has obtained County certification as a Local Small Business Enterprise by reason of having furnished incorrect supporting information or by reason of having withheld information, and which knew, or should have known, the information furnished was incorrect or the information withheld was relevant to its request for certification, and which by reason of such certification has been awarded this Contract to which it would not otherwise have been entitled, shall:

1. Pay to County any difference between this Contract amount and what County's costs would have been if this Contract had been properly awarded;

2. In addition to the amount described in subdivision (1), be assessed a penalty in an amount of not more than 10 percent of the amount of this Contract; and

3. Be subject to the provisions of Chapter 2.202 of the Los Angeles County Code (Determinations of Contractor Nonresponsibility and Contractor Debarment).

E. The above penalties shall also apply if Contractor is no longer eligible for certification as a result of a change of its status and Contractor failed to notify the State and County's Office of Affirmative Action Compliance of this information.

P:\aspub\CONTRACT\BEN\TRANSITSTOP NORTH & SOUTH\2008 SOUTH REBID\FINAL AGREEMENT\EXHIBIT B.DOC

EXHIBIT C

Department of the Treasury
Internal Revenue Service

Notice 1015

(Rev. December 2007)

Have You Told Your Employees About the Earned Income Credit (EIC)?

What Is the EIC?

The EIC is a refundable tax credit for certain workers.

Which Employees Must I Notify About the EIC?

You must notify each employee who worked for you at any time during the year and from whom you did not withhold income tax. However, you do not have to notify any employee who claimed exemption from withholding on Form W-4, Employee's Withholding Allowance Certificate.

Note. You are encouraged to notify each employee whose wages for 2007 are less than $39,783 that he or she may be eligible for the EIC.

How and When Must I Notify My Employees?

You must give the employee one of the following:

- The IRS Form W-2, Wage and Tax Statement, which has the required information about the EIC on the back of Copy B.
- A substitute Form W-2 with the same EIC information on the back of the employee's copy that is on Copy B of the IRS Form W-2.
- Notice 797, Possible Federal Tax Refund Due to the Earned Income Credit (EIC).
- Your written statement with the same wording as Notice 797.

If you are required to give Form W-2 and do so on time, no further notice is necessary if the Form W-2 has the required information about the EIC on the back of the employee's copy. If a substitute Form W-2 is given on time but does not have the required information, you must notify the employee within 1 week of the date the substitute Form W-2 is given. If Form W-2 is required but is not given on time, you must give the employee Notice 797 or your written statement by the date Form W-2 is required to be given. If Form W-2 is not required, you must notify the employee by February 7, 2008.

You must hand the notice directly to the employee or send it by First-Class Mail to the employee's last known address. You will not meet the notification requirements by posting Notice 797 on an employee bulletin board or sending it through office mail. However, you may want to post the notice to help inform all employees of the EIC. You can get copies of the notice from the IRS website at *www.irs.gov* or by calling 1-800-829-3676.

How Will My Employees Know If They Can Claim the EIC?

The basic requirements are covered in Notice 797. For more detailed information, the employee needs to see the 2007 instructions for Form 1040, 1040A, 1040EZ, or Pub. 596, Earned Income Credit (EIC).

How Do My Employees Claim the EIC?

Eligible employees claim the EIC on their 2007 tax return. Even employees who have no tax withheld from their pay or owe no tax can claim the EIC and get a refund, but they must file a tax return to do so. For example, if an employee has no tax withheld in 2007 and owes no tax but is eligible for a credit of $825, he or she must file a 2007 tax return to get the $825 refund.

How Do My Employees Get Advance EIC Payments?

Eligible employees who expect to have a qualifying child for 2008 can get part of the credit with their pay during the year by giving you a completed Form W-5, Earned Income Credit Advance Payment Certificate. You must include advance EIC payments with wages paid to these employees, but the payments are not wages and are not subject to payroll taxes. Generally, the payments are made from withheld income, social security, and Medicare taxes. For details, see Pub. 15 (Circular E), Employer's Tax Guide.

EXHIBIT D.1

No shame.
No blame.
No names.

Newborns can be safely given up at any Los Angeles County hospital emergency room or fire station.

In Los Angeles County:
1-877-BABY SAFE
1-877-222-9723
www.babysafela.org

What is the Safely Surrendered Baby Law?

California's Safely Surrendered Baby Law allows parents to give up their baby confidentially. As long as the baby has not been abused or neglected, parents may give up their newborn without fear of arrest or prosecution.

How does it work?

A distressed parent who is unable or unwilling to care for a baby can legally, confidentially and safely give up a baby within three days of birth. The baby must be handed to an employee at a Los Angeles County emergency room or fire station. As long as the child shows no signs of abuse or neglect, no name or other information is required. In case the parent changes his or her mind at a later date and wants the baby back, workers will use bracelets to help connect them to each other. One bracelet will be placed on the baby, and a matching bracelet will be given to the parent.

What if a parent wants the baby back?

Parents who change their minds can begin the process of reclaiming their newborns within 14 days. These parents should call the Los Angeles County Department of Children and Family Services at 1-800-540-4000.

Can only a parent bring in the baby?

In most cases, a parent will bring in the baby. The law allows other people to bring in the baby if they have legal custody.

Does the parent have to call before bringing in the baby?

No. A parent can bring in a baby anytime, 24 hours a day, 7 days a week so long as the parent gives the baby to someone who works at the hospital or fire station.

Does a parent have to tell anything to the people taking the baby?

No. However, hospital personnel will ask the parent to fill out a questionnaire designed to gather important medical history information, which is very useful in caring for the child. Although encouraged, filling out the questionnaire is not required.

What happens to the baby?

The baby will be examined and given medical treatment, if needed. Then the baby will be placed in a pre-adoptive home.

What happens to the parent?

Once the parent(s) has safely turned over the baby, they are free to go.

Why is California doing this?

The purpose of the Safely Surrendered Baby Law is to protect babies from being abandoned by their parents and potentially being hurt or killed. You may have heard tragic stories of babies left in dumpsters or public bathrooms. The parents who committed these acts may have been under severe emotional distress. The mothers may have hidden their pregnancies, fearful of what would happen if their families found out. Because they were afraid and had nowhere to turn for help, they abandoned their infants. Abandoning a baby puts the child in extreme danger. It is also illegal. Too often, it results in the baby's death. Because of the Safely Surrendered Baby Law, this tragedy doesn't ever have to happen in California again.

A baby's story

At 8:30 a.m. on Thursday, July 25, 2002, a healthy newborn baby was brought to St. Bernardine Medical Center in San Bernardino under the provisions of the California Safely Surrendered Baby Law. As the law states, the baby's mother did not have to identify herself. When the baby was brought to the emergency room, he was examined by a pediatrician, who determined that the baby was healthy and doing fine. He was placed with a loving family while the adoption process was started.

Every baby deserves a chance for a healthy life. If someone you know is considering abandoning a newborn, let her know there are other options.

It is best that women seek help to receive proper medical care and counseling while they are pregnant. But at the same time, we want to assure parents who choose not to keep their baby that they will not go to jail if they deliver their babies to safe hands in any Los Angeles County hospital ER or fire station.

EXHIBIT D.3

Sin pena.

Sin culpa.

Sin peligro.

Los recién nacidos pueden ser entregados en forma segura en la sala de emergencia de cualquier hospital o en un cuartel de bomberos del Condado de Los Angeles.

En el Condado de Los Angeles:
1-877-BABY SAFE
1-877-222-9723
www.babysafela.org

¿Qué es la Ley de Entrega de Bebés Sin Peligro?

La Ley de Entrega de Bebés Sin Peligro de California permite a los padres entregar a su recién nacido confidencialmente. Siempre que el bebé no haya sufrido abuso ni negligencia, padres pueden entregar a su recién nacido sin temor a ser arrestados o procesados.

¿Cómo funciona?

El padre/madre con dificultades que no pueda o no quiera cuidar de su recién nacido puede entregarlo en forma legal, confidencial y segura, dentro de los tres días del nacimiento. El bebé debe ser entregado a un empleado de una sala de emergencias o de un cuartel de bomberos del Condado de Los Angeles. Siempre que el bebé no presente signos de abuso o negligencia, no será necesario suministrar nombres ni información alguna. Si el padre/madre cambia de opinión posteriormente y desea recuperar a su bebé, los trabajadores utilizarán brazaletes para poder vincularlos. El bebé llevará un brazalete y el padre/madre recibirá un brazalete igual.

¿Qué pasa si el padre/madre desea recuperar a su bebé?

Los padres que cambien de opinión pueden empezar el proceso de reclamar a su recién nacido dentro de los 14 días. Estos padres deberán llamar al Departamento de Servicios para Niños y Familias (Department of Children and Family Services) del Condado de Los Angeles, al 1-800-540-4000.

¿Sólo los padres podrán llevar al recién nacido?

En la mayoría de los casos, los padres son los que llevan al bebé. La ley permite que otras personas lleven al bebé si tienen la custodia legal del menor.

¿Los padres deben llamar antes de llevar al bebé?

No. El padre/madre puede llevar a su bebé en cualquier momento, las 24 horas del día, los 7 días de la semana, mientras que entregue a su bebé a un empleado del hospital o de un cuartel de bomberos.

¿Es necesario que el padre/madre diga algo a las personas que reciben al bebé?

No. Sin embargo, el personal del hospital le pedirá que llene un cuestionario con la finalidad de recabar antecedentes médicos importantes, que resultan de gran utilidad para los cuidados que recibirá el bebé. Es recomendado llenar este cuestionario, pero no es obligatorio hacerlo.

¿Qué ocurrirá con el bebé?

El bebé será examinado y, de ser necesario, recibirá tratamiento médico. Luego el bebé se entregará a un hogar preadoptivo.

¿Qué pasará con el padre/madre?

Una vez que los padres hayan entregado a su bebé en forma segura, serán libres de irse.

¿Por qué California hace esto?

La finalidad de la Ley de Entrega de Bebés Sin Peligro es proteger a los bebés del abandono por parte de sus padres y de la posibilidad de que mueran o sufran daños. Usted probablemente haya escuchado historias trágicas sobre bebés abandonados en basureros o en baños públicos. Es posible que los padres que cometieron estos actos hayan estado atravesando dificultades emocionales graves. Las madres pueden haber ocultado su embarazo, por temor a lo que pasaría si sus familias se enteraran. Abandonaron a sus recién nacidos porque tenían miedo y no tenían adonde recurrir para obtener ayuda. El abandono de un recién nacido lo pone en una situación de peligro extremo. Además es ilegal. Muy a menudo el abandono provoca la muerte del bebé. Ahora, gracias a la Ley de Entrega de Bebés Sin Peligro, esta tragedia ya no debe suceder nunca más en California.

Historia de un bebé

A las 8:30 a.m. del jueves 25 de julio de 2002, se entregó un bebé recién nacido saludable en el St. Bernardine Medical Center en San Bernardino, en virtud de las disposiciones de la Ley de Entrega de Bebés Sin Peligro. Como lo establece la ley, la madre del bebé no se tuvo que identificar. Cuando el bebé llegó a la sala de emergencias, un pediatra lo revisó y determinó que el bebé estaba saludable y no tenía problemas. El bebé fue ubicado con una buena familia, mientras se iniciaban los trámites de adopción..

Cada recién nacido merece una oportunidad de tener una vida saludable. Si alguien que usted conoce está pensando en abandonar a un recién nacido, infórmele qué otras opciones tiene.

Es mejor que las mujeres busquen ayuda para recibir atención médica y asesoramiento adecuado durante el embarazo. Pero al mismo tiempo, queremos asegurarles a los padres que optan por no quedarse con su bebé que no irán a la cárcel si dejan a sus bebés en buenas manos en cualquier sala de emergencia de un hospital o en un cuartel de bomberos del Condado de Los Angeles.

EXHIBIT E

BUS STOP SHELTER LOCATIONS FOR MAINTENANCE PROGRAM – SOUTHERN UNINCORPORATED AREAS OF LOS ANGELES COUNTY

EXHIBIT E.1
BUS STOP SHELTER LOCATIONS FOR MAINTENANCE PROGRAM AT SOUTHERN UNINCORPORATED AREAS OF LOS ANGELES COUNTY

	Community	Dir	Street	Corner	Cross Street	T-G	Sup. Dist	PSA Panels	Watershed*	Shelter Type	Lighting
1	Athens	EB	108th St	NS	Western Av	703-H5	2	2	Dominguez Channel	Marv. shltr	Solar Panel
2	Athens	WB	120th St	NS	Compton Av	704-G7	2	2	Los Angeles River	Marv. shltr	Solar Panel
3	ELA	WB	1st St	NS	Mednik	635-G6	1	2	Los Angeles River	Marv. shltr	Solar Panel
4	ELA	EB	1st St	NS	Gage Av	635-D6	1	2	Los Angeles River	Marv. shltr	Solar Panel
5	ELA	EB	1st St	FS	Marianna	635-E6	1	2	Los Angeles River	Marv. shltr	Solar Panel
6	ELA	WB	3rd St	FS	Arizona Av	635 G6	1	0	Los Angeles River	Clr Chnl	None
7	ELA	EB	3rd St	FS	Mednik Av	635-G6	1	2	Los Angeles River	Marv. shltr	Solar Panel
8	San Pedro	WB	7th St	Opp	Patton St	823-J5	4	0	Los Angeles River	Marv. shltr	Solar Panel
9	Baldwin Hills	WB	54th St	NS	Alviso Av	673-D5	2	2	Ballona Creek	Marv. shltr	Solar Panel
10	Baldwin Hills	EB	54th St	FS	Alviso Av	673-D5	2	2	Ballona Creek	Marv. shltr	Solar Panel
11	Baldwin Hills	EB	54th St	FS	Harcourt Av	673-D5	2	2	Ballona Creek	Marv. shltr	Solar Panel
12	Walnut Park	EB	89th St	FS	Compton Av	704-F3	2	2	Los Angeles River	Marv. shltr	Solar Panel
13	Willowbrook	WB	92nd St	NS	Maie Av	704-G3	2	0	Los Angeles River	Marv. shltr	Solar Panel
14	Walnut Park	SB	Alameda St	NS	103rd St	704-J5	2	2	Los Angeles River	Marv. shltr	Solar Panel
15	ELA	NB	Atlantic Bl	FS	6th St	635-H7	1	0	Los Angeles River	Marv. shltr	Solar Panel
16	Rancho Dominguez	NB	Atlantic Av	FS	Myrrh St	735-D5	2	2	Los Angeles River	Marv. shltr	Solar Panel
17	Rancho Dominguez	NB	Atlantic Av	FS	Rosecrans Av	735-D3	2	2	Los Angeles River	Marv. shltr	Solar Panel
18	Rancho Dominguez	SB	Atlantic Av	NS	Rosecrans Av	735-D3	2	2	Los Angeles River	Marv. shltr	Solar Panel
19	ELA	SB	Atlantic Bl	FS	Beverly Bl	635-H6	1	0	Los Angeles River	Marv. shltr	Solar Panel
20	Rancho Dominguez	NB	Atlantic Bl	FS	Compton Av	735-D4	2	2	Los Angeles River	Marv. shltr	Solar Panel
21	ELA	NB	Atlantic Bl	NS	Eagle St	635-H7	1	2	Los Angeles River	Marv. shltr	Solar Panel
22	ELA	SB	Atlantic Bl	NS	Union Pacific Av	675-G2	1	2	Los Angeles River	Marv. shltr	Solar Panel
23	ELA	SB	Atlantic Bl	FS	Whittier Bl	675-H1	1	2	Los Angeles River	Marv. shltr	Solar Panel
24	Willowbrook	SB	Avalon Bl	NS	130th St	734-D2	2	2	Los Angeles River	Marv. shltr	Solar Panel
25	Willowbrook	NB	Avalon Bl	IN	132nd St	734-D2	2	2	Los Angeles River	Marv. shltr	Solar Panel
26	Willowbrook	NB	Avalon Bl	FS	135th St	734-D2	2	2	Los Angeles River	Marv. shltr	Solar Panel
27	Willowbrook	SB	Avalon Bl	NS	135th St	734-D2	2	2	Los Angeles River	Marv. shltr	Solar Panel
28	Willowbrook	NB	Avalon Bl	NS	Compton Bl	734-D4	2	2	Dominguez Channel	Marv. shltr	Solar Panel
29	Willowbrook	SB	Avalon Bl	NS	Compton Bl	734-D4	2	2	Dominguez Channel	Marv. shltr	Solar Panel
30	Willowbrook	NB	Avalon Bl	NS	El Segundo Bl	734-D2	2	2	Los Angeles River	Marv. shltr	Solar Panel
31	Willowbrook	SB	Avalon Bl	NS	El Segundo Bl	734-D2	2	2	Los Angeles River	Marv. shltr	Solar Panel
32	Willowbrook	NB	Avalon Bl	FS	Redondo Beach Bl	734-E5	2	2	Dominguez Channel	Marv. shltr	Solar Panel
33	Willowbrook	NB	Avalon Bl	NS	Rosecrans Av	734-D3	2	2	Dominguez Channel	Marv. shltr	Solar Panel
34	Azusa	NB	Azusa Av	FS	Arrow Hwy	598-J2	1	0	Los Angeles River	CDC shltr	Solar Pole

Each shelter includes a bench, a trash receptacle, and solar-powered lighting, electrical hard-wire lighting, or no lighting.
NS=Nearside, FS=Farside, MB=Midblock

EXHIBIT E.1
BUS STOP SHELTER LOCATIONS FOR MAINTENANCE PROGRAM AT SOUTHERN UNINCORPORATED AREAS OF LOS ANGELES COUNTY

	Community	Dir.	Street	Corner	Cross Street	T.G.	Sup. Dist.	PSA Panels	Watershed*	Shelter Type	Lighting
35	ELA	EB	Beverly Bl	NS	Atlantic Av	635-H6	1	0	Los Angeles River	Marv. shltr	Solar Panel
36	ELA	WB	Beverly Bl	FS	Gerhart Av	635-J7	1	2	Los Angeles River	Marv. shltr	Solar Panel
37	ELA	WB	Beverly Bl	FS	Sadler Av	635-J7	1	2	Los Angeles River	Marv. shltr	Solar Panel
38	ELA	SB	Brannick Av	NS	Hammel St	635-E5	1	2	Los Angeles River	Marv. shltr	Solar Panel
39	Willowbrook	SB	Broadway	NS	157th St	734-C5	2	2	Dominguez Channel	Marv. shltr	Solar Panel
40	Willowbrook	SB	Broadway	NS	Alondra Bl	734-C6	2	2	Dominguez Channel	Marv. shltr	Solar Panel
41	Willowbrook	SB	Broadway	NS	Compton Bl	734-C4	2	2	Dominguez Channel	Marv. shltr	Solar Panel
42	Willowbrook	SB	Central Av	FS	123rd St	734-F1	2	2	Los Angeles River	Marv. shltr	Solar Panel
43	Willowbrook	SB	Central Av	FS	131st St	734-F2	2	2	Los Angeles River	Marv. shltr	Solar Panel
44	Willowbrook	NB	Central Av	FS	139th St	734-F3	2	2	Los Angeles River	Marv. shltr	Solar Panel
45	Florence	NB	Central Av	IN	60th St	674-E6	2	0	Los Angeles River	Marv. shltr	Solar Panel
46	Florence	NB	Central Av	NS	68th St	674-E6	2	2	Los Angeles River	Marv. shltr	Solar Panel
47	Florence	NB	Central Av	FS	76th Pl	704-E1	2	2	Los Angeles River	Marv. shltr	Solar Panel
48	Florence	NB	Central Av	FS	79th St	704-E1	2	2	Los Angeles River	Marv. shltr	Solar Panel
49	Florence	NB	Central Av	NS	83rd St	704-E2	2	2	Los Angeles River	Marv. shltr	Solar Panel
50	Willowbrook	SB	Central Av	FS	El Segundo Bl	734-F1	2	0	Los Angeles River	Marv. shltr	Solar Panel
51	ELA	EB	Cesar E. Chavez Av	NS	Dangler Av	635-G5	1	0	Los Angeles River	CDC shltr	Solar Pole
52	ELA	WB	Cesar E. Chavez Av	NS	Dangler Av	635-G5	1	0	Los Angeles River	CDC shltr	Solar Pole
53	ELA	WB	Cesar E. Chavez Av	NS	Eastern Av	635-E5	1	2	Los Angeles River	Marv. shltr	Solar Panel
54	ELA	EB	Cesar E. Chavez Av	FS	Ford Bl	635-F5	1	0	Los Angeles River	CDC shltr	Solar Pole
55	ELA	WB	Cesar E. Chavez Av	NS	Ford Bl	635-F5	1	0	Los Angeles River	CDC shltr	Solar Pole
56	ELA	EB	Cesar E. Chavez Av	FS	Gage Av	635-D5	1	2	Los Angeles River	Marv. shltr	Solar Panel
57	ELA	EB	Cesar E. Chavez Av	NS	Hazard Av	635-E5	1	2	Los Angeles River	Marv. shltr	Solar Panel
58	ELA	WB	Cesar E. Chavez Av	NS	Hazard Av	635-E5	1	2	Los Angeles River	Marv. shltr	Solar Panel
59	ELA	WB	Cesar E. Chavez Av	NS	Humphreys Av	635-F5	1	2	Los Angeles River	Marv. shltr	Solar Panel
60	ELA	EB	Cesar E. Chavez Av	FS	McDonnell Av	635-F5	1	0	Los Angeles River	CDC shltr	Solar Pole
61	ELA	WB	Cesar E. Chavez Av	NS	McDonnell Av	635-F5	1	0	Los Angeles River	CDC shltr	Solar Pole
62	ELA	EB	Cesar E. Chavez Av	NS	Mednik Av	635-G5	1	0	Los Angeles River	CDC shltr	Solar Pole
63	ELA	WB	Cesar E. Chavez Av	NS	Mednik Av	635-G5	1	0	Los Angeles River	CDC shltr	Solar Pole
64	ELA	EB	Cesar E. Chavez Av	FS	Rowan Av	635-D5	1	2	Los Angeles River	Marv. shltr	Solar Panel
65	ELA	EB	City Terrace Dr	NS	Alma Av	635-D4	1	2	Los Angeles River	Marv. shltr	Solar Panel
66	ELA	EB	City Terrace Dr	FS	Herbert Av	635-D3	1	2	Los Angeles River	Marv. shltr	Solar Panel
67	ELA	EB	City Terrace Dr	FS	Van Pelt Av	635-E3	1	2	Los Angeles River	Marv. shltr	Solar Panel
68	Rowland Heights	WB	Colima Rd	NS	Batson Av	679-A5	4	0	San Gabriel River	Marv. shltr	Solar Panel

Each shelter includes a bench, a trash receptacle, and solar-powered lighting, electrical hard-wire lighting, or no lighting.
NS=Nearside, FS=Farside, MB=Midblock

EXHIBIT E.1
BUS STOP SHELTER LOCATIONS FOR MAINTENANCE PROGRAM AT SOUTHERN UNINCORPORATED AREAS OF LOS ANGELES COUNTY

	Community	Dir.	Street	Corner	Cross Street	T.G.	Sup. Dist.	PSA Panels	Watershed*	Shelter Type	Lighting
69	Rowland Heights	WB	Colima Rd	FS	Fairway Dr	679-E5	4	0	San Gabriel River	Marv. shltr	Solar Panel
70	Rowland Heights	EB	Colima Rd	NS	Fullerton Rd	679-A5	1	0	San Gabriel River	Marv. shltr	Solar Panel
71	Rowland Heights	WB	Colima Rd	FS	Nausika Av	679-D5	4	0	San Gabriel River	Marv. shltr	Solar Panel
72	Rowland Heights	EB	Colima Rd	FS	Nogales St	679-B5	4	0	San Gabriel River	Marv. shltr	Solar Panel
73	Florence	SB	Compton Av	NS	124th St	734-G1	2	2	Los Angeles River	Marv. shltr	Solar Panel
74	Florence	SB	Compton Av	NS	66th St	674-F7	2	2	Los Angeles River	Marv. shltr	Solar Panel
75	Florence	SB	Compton Av	NS	Florence Av	674-F7	2	2	Los Angeles River	Marv. shltr	Solar Panel
76	Florence	NB	Compton Av	NS	Florence Av	674-F7	2	2	Los Angeles River	Marv. shltr	Solar Panel
77	Florence	SB	Compton Av	FS	Gage Av	674-F6	1	0	Los Angeles River	Marv. shltr	Solar Panel
78	Florence	NB	Compton Av	NS	Slauson Av	674-F5	1	0	Los Angeles River	Marv. shltr	Solar Panel
79	Rancho Dominguez	WB	Compton Bl	FS	Atlantic Av	735-D4	2	2	Los Angeles River	Clr Chnl	None
80	Willowbrook	EB	Compton Bl	FS	Avalon Bl	734-D4	2	2	Los Angeles River	Marv. shltr	Solar Panel
81	Willowbrook	WB	Compton Bl	NS	Avalon Bl	734-D4	2	2	Dominguez Channel	Marv. shltr	Solar Panel
82	El Camino Village	SB	Crenshaw Bl	NS	Redondo Beach Bl	733-F6	2	2	Dominguez Channel	Marv. shltr	Solar Panel
83	ELA	SB	Eastern Av	NS	City Terrace Dr	635 F3	1	0	Dominguez Channel	Marv. shltr	Solar Panel
84	ELA	NB	Eastern Av	FS	Gleason St	635-F6	1	2	Los Angeles River	Clr Chnl	Solar Pole
85	Willowbrook	EB	El Segundo Bl	FS	Avalon Bl	734-D1	2	2	Los Angeles River	Marv. shltr	Solar Panel
86	Willowbrook	WB	El Segundo Bl	FS	Avalon Bl	734-D1	2	2	Los Angeles River	Marv. shltr	Solar Panel
87	Athens	WB	El Segundo Bl	NS	Budlong Av	734-A1	2	2	Los Angeles River	Marv. shltr	Solar Panel
88	Willowbrook	WB	El Segundo Bl	FS	Central Av	734-F1	2	2	Dominguez Channel	Marv. shltr	Solar Panel
89	Willowbrook	EB	El Segundo Bl	NS	Central Av	734-F1	2	2	Los Angeles River	Marv. shltr	Solar Panel
90	Willowbrook	WB	El Segundo Bl	IN	Keene Av	734-E1	2	2	Los Angeles River	Marv. shltr	Solar Panel
91	Willowbrook	EB	El Segundo Bl	NS	Main St	734-C1	2	2	Los Angeles River	Marv. shltr	Solar Panel
92	Willowbrook	WB	El Segundo Bl	IN	McKinley Av	734-E1	2	2	Dominguez Channel	Marv. shltr	Solar Panel
93	Athens	WB	El Segundo Bl	NS	Normandie Av	733-J1	2	2	Los Angeles River	Marv. shltr	Solar Panel
94	Del Aire	WB	El Segundo Bl	NS	Ocean Gate Av	733-B2	2	2	Dominguez Channel	Marv. shltr	Solar Panel
95	Willowbrook	EB	El Segundo Bl	NS	San Pedro St	734-D1	2	2	Dominguez Channel	Marv. shltr	Solar Panel
96	Florence	WB	Firestone Bl	FS	Compton Av	704-F2	2	2	Dominguez Channel	Marv. shltr	Solar Panel
97	Florence	WB	Firestone Bl	FS	Fir Av	704-H2	1	2	Los Angeles River	Marv. shltr	Solar Panel
98	Florence	WB	Firestone Bl	NS	Hooper Av	704-F2	2	2	Los Angeles River	Marv. shltr	Solar Panel
99	Florence	EB	Florence Av	NS	Bell Av	674-G7	1	2	Los Angeles River	Marv. shltr	Solar Panel
100	Florence	EB	Florence Av	FS	Central Av	674-E7	2	0	Los Angeles River	Clr Chnl	Solar Pole
101	Florence	WB	Florence Av	NS	Graham Av	674-G7	1	2	Los Angeles River	Clr Chnl	Solar Pole
102	Florence	EB	Florence Av	FS	Graham Av #1**	674-G7	1	2	Los Angeles River	Marv. shltr	Solar Panel
									Los Angeles River	Clr Chnl	None

Each shelter includes a bench, a trash receptacle, and solar-powered lighting, electrical hard-wire lighting, or no lighting.
NS=Nearside, FS=Farside, MB=Midblock

EXHIBIT E.1
BUS STOP SHELTER LOCATIONS FOR MAINTENANCE PROGRAM AT SOUTHERN UNINCORPORATED AREAS OF LOS ANGELES COUNTY

	Jurisdiction	Dir	Street	Corner	Cross Street	T.G.	Sup. DIST	PSA Panels	Watershed*	Shelter Type	Lighting
103	Florence	EB	Florence Av	FS	Graham Av #2**	674-G7	1	2	Los Angeles River	Clr Chnl	None
104	Florence	WB	Florence Av	NS	Holmes Av	674-G7	1	2	Los Angeles River	Clr Chnl	Solar Pole
105	Florence	EB	Florence Av	FS	Hooper Av	674-F7	2	0	Los Angeles River	Clr Chnl	Solar Pole
106	Florence	WB	Florence Av	NS	Hooper Av	674-F7	2	0	Los Angeles River	Clr Chnl	Solar Pole
107	Florence	EB	Florence Av	NS	Miramonte Bl	674-G7	2	2	Los Angeles River	Clr Chnl	Solar Pole
108	Florence	EB	Florence Av	NS	Mountain View	675-A7	1	2	Los Angeles River	Clr Chnl	Solar Pole
109	Florence	EB	Florence Av	NS	Santa Fe Av	674-H7	1	2	Los Angeles River	Clr Chnl	Solar Pole
110	La Crescenta	WB	Foothill Bl	FS	Briggs Av	534-H2	5	2	Los Angeles River	Marv. shltr	Solar Panel
111	La Crescenta	WB	Foothill Bl	FS	La Crescenta Av	534-G1	5	0	Los Angeles River	Marv. shltr	Solar Panel
112	La Crescenta	EB	Foothill Bl	FS	Raymond Av	534-G1	5	0	Los Angeles River	Marv. shltr	Solar Panel
113	ELA	NB	Ford Bl	FS	Mines St	675-F1	1	0	Los Angeles River	Marv. shltr	Solar Panel
114	ELA	NB	Gage Av	NS	Cesar E. Chavez Av	635-D5	1	2	Los Angeles River	Marv. shltr	Solar Panel
115	ELA	NB	Garfield Av	FS	Olympic Bl	676-A2	1	2	Los Angeles River	Marv. shltr	Solar Panel
116	Lennox	SB	Hawthorne Bl	FS	104th St	703-C5	2	2	Dominguez Channel	Marv. shltr	Solar Panel
117	ELA	NB	Hazard Av	FS	Dobinson St	635-E4	1	0	Los Angeles River	Marv. shltr	Solar Panel
118	ELA	SB	Hillview Av	FS	Beverly Bl	635-H7	1	2	Los Angeles River	Marv. shltr	Solar Panel
119	Florence	NB	Holmes Av	NS	68th St	674-G6	1	2	Los Angeles River	Marv. shltr	Solar Panel
120	Florence	NB	Holmes Av	NS	Randolph St	674-G6	1	0	Los Angeles River	Clr Chnl	Solar Pole
121	Willowbrook	EB	Imperial Hwy	NS	Compton Av	704-G6	2	2	Los Angeles River	Marv. shltr	Solar Panel
122	Athens	EB	Imperial Hwy	FS	Denker Av	703-J6	2	2	Dominguez Channel	Marv. shltr	Solar Panel
123	Athens	EB	Imperial Hwy	FS	Normandie Av	703-J6	2	2	Dominguez Channel	Marv. shltr	Solar Panel
124	Lennox	NB	La Cienega Bl	FS	Imperial Hwy	703-A7	2	2	Dominguez Channel	Marv. shltr	Solar Panel
125	Lennox	EB	Lennox Bl	FS	Hawthorne Bl	703-C5	2	2	Dominguez Channel	Marv. shltr	Solar Panel
126	Florence	SB	Maie Ave	FS	Firestone	704-G2	2	2	Los Angeles River	Marv. shltr	Solar Panel
127	Willowbrook	NB	Main St	FS	139th St	734-C3	2	2	Dominguez Channel	Marv. shltr	Solar Panel
128	El Camino Village	WB	Manhatten Beach Bl	NS	Doty Av	733-E6	2	2	Dominguez Channel	Marv. shltr	Solar Panel
129	El Camino Village	WB	Manhatten Beach Bl	NS	Prairie Av	733-E6	2	2	Dominguez Channel	Marv. shltr	Solar Panel
130	ELA	EB	Marengo St	MB	Evergreen Av/City Terrace Dr	635-D3	1	2	Los Angeles River	Marv. shltr	Solar Panel
131	ELA	NB	Mednik Av	FS	1St St	635-G6	1	0	Los Angeles River	Marv. shltr	Solar Panel
132	Athens	NB	Normandie Av	NS	104th St	703-J5	2	2	Los Angeles River	Marv. shltr	Solar Panel
133	Athens	NB	Normandie Av	NS	106th St	703-J5	2	2	Los Angeles River	Marv. shltr	Solar Panel
134	Athens	SB	Normandie Av	FS	108th St	703-J5	2	2	Los Angeles River	Marv. shltr	Solar Panel
135	Athens	SB	Normandie Av	NS	110th St	703-J6	2	2	Dominguez Channel	Marv. shltr	Solar Panel
136	Athens	NB	Normandie Av	FS	110th St	703-J6	2	2	Dominguez Channel	Marv. shltr	Solar Panel

Each shelter includes a bench, a trash receptacle, and solar-powered lighting, electrical hard-wire lighting, or no lighting.
NS=Nearside, FS=Farside, MB=Midblock

EXHIBIT E.1
BUS STOP SHELTER LOCATIONS FOR MAINTENANCE PROGRAM AT SOUTHERN UNINCORPORATED AREAS OF LOS ANGELES COUNTY

	Jurisdiction	Dir	Street	Corner	Cross Street	T.G	Sup. Dist	PSA Panels	Watershed*	Shelter Type	Lighting
137	Athens	NB	Normandie Av	FS	95th St	703-J4	2	2	Los Angeles River	Marv. shltr	Solar Panel
138	Athens	SB	Normandie Av	FS	95th St	703-J4	2	2	Los Angeles River	Marv. shltr	Solar Panel
139	Athens	SB	Normandie Av	NS	98th St	703-J4	2	2	Los Angeles River	Marv. shltr	Solar Panel
140	Athens	NB	Normandie Av	NS	98th St	703-J4	2	2	Los Angeles River	Marv. shltr	Solar Panel
141	Athens	NB	Normandie Av	NS	Century Bl	703-J4	2	2	Los Angeles River	Marv. shltr	Solar Panel
142	Willowbrook	SB	Normandie Av	NS	El Segundo Bl	733-J1	2	2	Dominguez Channel	Marv. shltr	Solar Panel
143	ELA	WB	Olympic Bl	NS	Arizona Av	675-F1	1	2	Los Angeles River	Marv. shltr	Solar Panel
144	ELA	EB	Olympic Bl	FS	Atlantic Bl	675-G1	1	2	Los Angeles River	Marv. shltr	Solar Panel
145	ELA	EB	Olympic Bl	FS	Fetterly Av	675-G1	1	2	Los Angeles River	Marv. shltr	Solar Panel
146	ELA	WB	Olympic Bl	NS	Fetterly Av	675-G1	1	2	Los Angeles River	Marv. shltr	Solar Panel
147	ELA	EB	Olympic Bl	NS	Ford Bl	675-F1	1	0	Los Angeles River	Marv. shltr	Solar Panel
148	ELA	WB	Olympic Bl	NS	Ford Bl	675-F1	1	0	Los Angeles River	Marv. shltr	Solar Panel
149	ELA	WB	Olympic Bl	FS	Garfield Av	676-B2	1	2	Los Angeles River	Marv. shltr	Solar Panel
150	ELA	EB	Olympic Bl	NS	Garfield Av	676-B2	1	2	Los Angeles River	Marv. shltr	Solar Panel
151	ELA	EB	Olympic Bl	NS	McBride Av	675-F1	1	2	Los Angeles River	Marv. shltr	Solar Panel
152	ELA	EB	Olympic Bl	NS	Northside/Southside	675-J2	1	2	Los Angeles River	Marv. shltr	Solar Panel
153	ELA	WB	Olympic Bl	NS	Wilkins Av	675-F1	1	2	Los Angeles River	Marv. shltr	Solar Panel
154	Florence	SB	Pacific Bl	NS	Grand Av	704-J1	1	2	Los Angeles River	Marv. shltr	Solar Panel
155	Florence	SB	Pacific Bl	NS	Live Oak St	704-J1	1	2	Los Angeles River	Clr Chnl	Solar Pole
156	ELA	WB	Pomeroy St	NS	City Terrace Dr	635-D4	1	2	Los Angeles River	Clr Chnl	Solar Pole
157	ELA	EB	Pomona Bl	FS	Atlantic St	635-H6	1	2	Los Angeles River	Marv. shltr	Solar Panel
158	ELA	EB	Ramona Bl	MB	Eastern Av /Campus Dr	635-F2	1	2	Los Angeles River	Marv. shltr	Solar Panel
159	ELA	WB	Ramona Bl	MB	Eastern Av /Campus Dr	635-F2	1	2	Los Angeles River	Marv. shltr	Solar Panel
160	Willowbrook	WB	Rosecrans Av	FS	Broadway	734-C3	2	2	Dominguez Channel	Marv. shltr	Solar Panel
161	Willowbrook	EB	Rosecrans Av	FS	Broadway	734-C3	2	2	Dominguez Channel	Marv. shltr	Solar Panel
162	Willowbrook	EB	Rosecrans Av	NS	Main St	734-C3	2	0	Dominguez Channel	Marv. shltr	Solar Panel
163	Willowbrook	WB	Rosecrans Av	FS	San Pedro St	734-D4	2	2	Dominguez Channel	Marv. shltr	Solar Panel
164	Florence	NB	Santa Fe Av	NS	Live Oak St	704-H1	1	0	Los Angeles River	Clr Chnl	Solar Pole
165	Baldwin Hills	WB	Slauson Av	FS	Overhill Dr	673-C6	2	0	Ballona Creek	Marv. shltr	Solar Panel
166	Baldwin Hills	EB	Slauson Av	NS	Fairfax Av	673-B6	2	2	Ballona Creek	Marv. shltr	Solar Panel
167	Florence	EB	Slauson Av	NS	Hooper Av	674-F5	2	0	Los Angeles River	Marv. shltr	Solar Panel
168	Baldwin Hills	WB	Slauson Av	FS	La Tijera Bl	673-B6	2	2	Ballona Creek	Marv. shltr	Solar Panel
169	Athens	SB	Vermont Av	NS	103rd St	704-A5	2	2	Los Angeles River	Marv. shltr	Solar Panel
170	Athens	SB	Vermont Av	NS	109th St	704-A6	2	2	Los Angeles River	Marv. shltr	Solar Panel

Each shelter includes a bench, a trash receptacle, and solar-powered lighting, electrical hard-wire lighting, or no lighting.
NS=Nearside, FS=Farside, MB=Midblock

EXHIBIT E.1
BUS STOP SHELTER LOCATIONS FOR MAINTENANCE PROGRAM AT SOUTHERN UNINCORPORATED AREAS OF LOS ANGELES COUNTY

	Community	Dir	Street	Corner	Cross Street	T.G	Sup. Dist	PSA Panels	Watershed*	Shelter Type	Lighting
171	Athens	SB	Vermont Av	NS	110th St	704-A6	2	2	Los Angeles River	Marv. shltr	Solar Panel
172	Athens	SB	Vermont Av	NS	119th Pl	704-A7	2	2	Dominguez Channel	Marv. shltr	Solar Panel
173	Harbor City	SB	Vermont Av	FS	223rd St	764-B7	2	2	Dominguez Channel	Marv. shltr	Solar Panel
174	Athens	SB	Vermont Av	NS	93rd St	704-A4	2	2	Los Angeles River	Marv. shltr	Solar Panel
175	Athens	SB	Vermont Av	NS	Colden Av	704-A4	2	2	Los Angeles River	Marv. shltr	Solar Panel
176	Athens	SB	Vermont Av	FS	Imperial Hwy	704-A6	2	2	Dominguez Channel	Marv. shltr	Solar Panel
177	Harbor City	SB	Vermont Av	FS	Torrance Bl	764-B5	2	2	Dominguez Channel	Marv. shltr	Solar Panel
178	Bassett	NB	Vineland Av	inside	Bassett Park	637-J1	1	2	Los Angeles River	Marv. shltr	Solar Panel
179	Athens	NB	Western Av	NS	104th St	703-H5	2	2	Dominguez Channel	Marv. shltr	Solar Panel
180	Athens	NB	Western Av	NS	108th St	703-H5	2	2	Dominguez Channel	Marv. shltr	Solar Panel
181	Athens	NB	Western Av	MB	Imperial Hwy	703-H6	2	2	Dominguez Channel	Marv. shltr	Solar Panel
182	Athens	SB	Western Av	FS	Imperial Hwy	703-H6	2	2	Dominguez Channel	Marv. shltr	Solar Panel
183	Athens	NB	Western Av	NS	LA Southwest College	703-H7	2	2	Dominguez Channel	Marv. shltr	Solar Panel
184	Athens	SB	Western Av	FS	LA Southwest College	703-H7	2	2	Dominguez Channel	Marv. shltr	Solar Panel
185	ELA	WB	Whittier Bl	NS	Atlantic Bl	675-H1	1	2	Los Angeles River	Marv. shltr	Solar Panel
186	ELA	EB	Whittier Bl	NS	Atlantic Bl	675-H1	1	2	Los Angeles River	Marv. shltr	Solar Panel
187	ELA	WB	Whittier Bl	NS	Findlay Av	676-A1	1	2	Los Angeles River	Marv. shltr	Solar Panel
188	ELA	WB	Whittier Bl	FS	Findlay Av	676-A1	1	2	Los Angeles River	Marv. shltr	Solar Panel
189	ELA	WB	Whittier Bl	NS	Goodrich Bl	675-H1	1	0	Los Angeles River	Marv. shltr	Solar Panel
190	ELA	WB	Whittier Bl	FS	Gerhart Av	675-J1	1	0	Los Angeles River	Marv. shltr	Solar Panel
191	ELA	WB	Whittier Bl	FS	Keenan Av	675-J1	1	2	Los Angeles River	Marv. shltr	Solar Panel
192	ELA	EB	Whittier Bl	FS	Leonard Av	676-J1	1	2	Los Angeles River	Marv. shltr	Solar Panel
193	ELA	WB	Whittier Bl	NS	Oakford	675-H1	1	2	Los Angeles River	Marv. shltr	Solar Panel
194	ELA	EB	Whittier Bl	NS	Saybrook Av	676-A1	1	2	Los Angeles River	Marv. shltr	Solar Panel
195	ELA	EB	Whittier Bl	FS	Simmons Av	676-A1	1	2	Los Angeles River	Marv. shltr	Solar Panel
196	ELA	WB	Whittier Bl	FS	Via Del Oro	676-A1	1	2	Los Angeles River	Marv. shltr	Solar Panel
197	Willowbrook	NB	Willowbrook Av	NS	El Segundo Bl	734-H1	2	2	Los Angeles River	Marv. shltr	Solar Panel
198	Willowbrook	NB	Wilmington Av	FS	119th St	704-G7	2	2	Los Angeles River	Marv. shltr	Solar Panel
199	Willowbrook	SB	Wilmington Av	FS	120th St	704-G7	2	2	Los Angeles River	CDC shltr	Hard-wire
200	Willowbrook	NB	Wilmington Av	FS	120th St	704-G7	2	2	Los Angeles River	CDC shltr	Hard-wire
201	Willowbrook	SB	Wilmington Av	FS	123th St	734-G1	2	2	Los Angeles River	CDC shltr	Hard-wire
202	Willowbrook	SB	Wilmington Av	FS	King Drew Med. Ctr	704-G7	2	2	Los Angeles River	CDC shltr	None
203	Bassett	EB	Workman Mill Rd	FS	Fontenoy Av	637-F5	1	0	San Gabriel River	Marv. shltr	Solar Panel
204	Bassett	EB	Workman Mill Rd	FS	Coleford Av	637-F5	1	0	San Gabriel River	Marv. shltr	Solar Panel

Each shelter includes a bench, a trash receptacle, and solar-powered lighting, electrical hard-wire lighting, or no lighting.
NS=Nearside, FS=Farside, MB=Midblock

EXHIBIT E.1
BUS STOP SHELTER LOCATIONS FOR MAINTENANCE PROGRAM AT SOUTHERN UNINCORPORATED AREAS OF LOS ANGELES COUNTY

#	Community	Dir.	Street	Corner	Cross Street	T.G.	Sup. Dist	PSA Panels	Watershed*	Shelter Type	Lighting
205	Bassett	WB	Workman Mill Rd	FS	Coleford Av	637-F5	1	0	San Gabriel River	Marv. shltr	Solar Panel
206	Bassett	EB	Workman Mill Rd	NS	Don Julian Rd	637-H5	1	0	San Gabriel River	Marv. shltr	Solar Panel
207	Bassett	WB	Workman Mill Rd	FS	Bark Dr	637-G5	1	0	San Gabriel River	Marv. shltr	Solar Panel
208	Bassett	WB	Workman Mill Rd	FS	Lomitas Av	637-G5	1	0	San Gabriel River	Marv. shltr	Solar Panel
209	Bassett	EB	Workman Mill Rd	NS	Lomitas Av	637-G5	1	0	San Gabriel River	Marv. shltr	Solar Panel
210**	Bassett	EB	Workman Mill Rd	NS	Valley Bl	637-J4	1	0	San Gabriel River	Marv. shltr	Solar Panel
211	Bassett	WB	Workman Mill Rd	FS	Oakman Dr	637-G5	1	0	San Gabriel River	Marv. shltr	Solar Panel

* Dominguez channel, Malibu, and San Gabriel River Watersheds are subject to NPDES regulations; Ballona and Los Angeles River Watersheds are not subject to NPDES regulations.
** Shelters are next to one another

	Shltr
Number of shelters in SD-1	94
Number of shelters in SD-2	109
Number of shelters in SD-4	5
Number of shelters in SD-5	3
	211

Each shelter includes a bench, a trash receptacle, and solar-powered lighting, electrical hard-wire lighting, or no lighting.
NS=Nearside, FS=Farside, MB=Midblock

EXHIBIT E.2
BUS BENCH LOCATIONS FOR MAINTENANCE PROGRAM AT SOUTHERN UNINCORPORATED AREAS OF LOS ANGELES COUNTY

Loc. #	Community	Direction	Street	Corner	Cross Street	Watershed*	No. of units	T.G.	Sup. DiSt	Adjacent to Trash Receptacle(s)	
										Iron**	Wire mesh**
1	ELA	EB	1st St	NS	Ditman Av	Los Angeles River	1	635-D6	1	1	
2	ELA	WB	1st St	FS	Ditman Av	Los Angeles River	1	635-D6	1	1	
3	ELA	WB	1st St	FS	Gage Av	Los Angeles River	1	635-D6	1	1	
4	ELA	EB	1st St	NS	Herbert Av	Los Angeles River	1	635-E6	1	1	
5	ELA	WB	1st St	FS	Herbert Av	Los Angeles River	1	635-D6	1	1	
6	ELA	WB	1st St	NS	Indiana St	Los Angeles River	1	635-D6	1	1	
7	ELA	EB	1st St	FS	Mednik Av	Los Angeles River	1	635-G6	1	1	
8	ELA	WB	1st St	FS	Rowan Av	Los Angeles River	1	635-D6	1	1	
9	ELA	WB	3rd St	NS	McDonnell Av	Los Angeles River	1	635-F6	1	1	
10	Baldwin Hills	EB	Angeles Vista Bl	NS	Harcross Dr	Ballona Creek	1	673-C5	2	1	
11	Baldwin Hills	WB	Angeles Vista Bl	NS	Harcross Dr	Ballona Creek	1	673-C5	2	1	
12	Baldwin Hills	EB	Angeles Vista Bl	FS	Slauson Av	Ballona Creek	1	673-C6	2	1	
13	Baldwin Hills	EB	Angeles Vista Bl	NS	Valley Ridge Av	Ballona Creek	1	673-D5	2	1	
14	Baldwin Hills	EB	Angeles Vista Bl	FS	Verdun Av	Ballona Creek	1	673-D5	2	1	
15	Baldwin Hills	WB	Angeles Vista Bl	NS	Verdun Av	Ballona Creek	1	673-D5	2	1	
16	ELA	SB	Atlantic Bl	FS	Beverly Bl	Los Angeles River	1	635-H6	1	1	
17	ELA	NB	Atlantic Bl	NS	Beverly Bl	Los Angeles River	1	635-H6	1		1
18	ELA	WB	Beverly Bl	NS	Atlantic Bl	Los Angeles River	2	635-H6	1		1
19	ELA	WB	Cesar Chavez Av	NS	Ditman Av	Los Angeles River	1	635-D5	1	1	
20	ELA	WB	City Terrace Dr	NS	Hazard Av	Los Angeles River	1	635-E3	1		
21	ELA	EB	City Terrace Dr	NS	Hazard Av	Los Angeles River	2	635-E3	1	1	1
22	Florence	SB	Compton Av	FS	60th St	Los Angeles River	1	674-G6	1	1	
23	Florence	NB	Compton Av	NS	66th St	Los Angeles River	1	674-F7	1	1	
24	Florence	NB	Compton Av	NS	70th St	Los Angeles River	1	674-F7	1	1	
25	Florence	NB	Compton Av	NS	Gage Av	Los Angeles River	1	674-F6	1		1
26	Florence	NB	Compton Av	NS	Slauson Av	Los Angeles River	1	674-F5	1	2	
27	Altadena	SB	Fair Oaks Av	NS	Mendicino St	Los Angeles River	1	535-H5	5	1	
28	ELA	WB	Fairmount St	FS	Hazard Av	Los Angeles River	1	635-E4	1	1	
29	Florence	EB	Firestone Bl	NS	Fir Av	Los Angeles River	2	704-H2	1	1	
30	Florence	WB	Firestone Bl	NS	Graham Av	Los Angeles River	1	704-G2	1	1	

NS=Nearside
FS=Farside
MB=Midblock

EXHIBIT E.2
BUS BENCH LOCATIONS FOR MAINTENANCE PROGRAM AT SOUTHERN UNINCORPORATED AREAS OF LOS ANGELES COUNTY

Loc. #	Community	Direction	Street	Corner	Cross Street	Watershed*	No. of units	T.G.	Sup. DiSt	Adjacent to Trash Receptacle(s)	
										Iron**	Wire mesh**
31	Florence	EB	Firestone Bl	NS	Graham Av	Los Angeles River	2	704-G2	1	1	
32	Florence	WB	Firestone Bl	NS	Holmes Av	Los Angeles River	1	704-G2	1	1	
33	Florence	EB	Firestone Bl	NS	Holmes Av	Los Angeles River	2	704-G2	1	1	
34	Florence	WB	Florence Av	NS	Miramonte Bl	Los Angeles River	2	674-G7	2	1	
35	Florence	EB	Florence Av	FS	Pacific Bl	Los Angeles River	1	674-J7	1	1	
36	La Crescenta	EB	Foothill Bl	NS	Glenwood Av	Los Angeles River	1	534-F1	5	1	
37	La Crescenta	EB	Foothill Bl	NS	La Crescenta Av	Los Angeles River	1	534-G1	5	1	
38	La Crescenta	WB	Foothill Bl	FS	Ramsdell Av	Los Angeles River	1	534-F1	5	1	
39	ELA	NB	Gage Av	NS	Blanchard St	Los Angeles River	1	635-D4	1	1	
40	ELA	SB	Gage Av	FS	Blanchard St	Los Angeles River	1	635-D4	1	1	
41	ELA	NB	Hazard Av	NS	Snow Dr	Los Angeles River	1	635-E4	1	1	
42	ELA	SB	Hazard Av	FS	Snow Dr	Los Angeles River	1	635-E4	1	1	
43	Florence	SB	Holmes Av	NS	62nd ST	Los Angeles River	1	674-G6	1	1	
44	Florence	NB	Holmes Av	NS	66th St	Los Angeles River	1	674-G7	1	1	
45	Florence	SB	Holmes Av	NS	Florence Av	Los Angeles River	1	674-G7	1	1	
46	Florence	NB	Holmes Av	FS	Florence Av	Los Angeles River	1	674-G7	1	1	
47	Florence	SB	Holmes Av	FS	Gage Av	Los Angeles River	1	674-G6	1	1	
48	Florence	NB	Holmes Av	NS	Gage Av	Los Angeles River	1	674-G6	1	1	
49	Florence	SB	Holmes Av	NS	Randolph St	Los Angeles River	1	674-G6	1	1	
50	Florence	NB	Holmes Av	NS	Slauson Av	Los Angeles River	2	674-G5	1	1	
51	Florence	NB	Maie St	FS	88th St	Los Angeles River	2	704-G2	2		
52	Florence	NB	Maie St	NS	Firestone Bl	Los Angeles River	2	704-G2	2		
53	Altadena	WB	Mariposa St	FS	Saint James Pl	Los Angeles River	1	535-J5	5	1	
54	Arcadia	NB	Myrtle Av	NS	Wyland Wy	Los Angeles River	1	597-G1	5	1	
55	Florence	EB	Nadeau St	NS	Alameda St	Los Angeles River	1	704-H1	1	1	
56	Florence	WB	Nadeau St	FS	Alameda St	Los Angeles River	1	704-H1	1	1	
57	Baldwin Hills	NB	Overhill Dr	FS	Northridge Dr	Ballona Creek	1	673-C5	2	1	
58	Baldwin Hills	SB	Overhill Dr	FS	Northridge Dr	Ballona Creek	1	673-C5	2	1	
59	Baldwin Hills	NB	Overhill Dr	FS	Slauson Av	Ballona Creek	1	673-C6	2	1	
60	Florence	NB	Pacific Bl	FS	Broadway	Los Angeles River	1	704-J1	1		1

NS=Nearside
FS=Farside
MB=Midblock

EXHIBIT E.2
BUS BENCH LOCATIONS FOR MAINTENANCE PROGRAM AT SOUTHERN UNINCORPORATED AREAS OF LOS ANGELES COUNTY

Loc. #	Community	Direction	Street	Corner	Cross Street	Watershed*	No. of units	T.G.	Sup. DiSt	Adjacent to Trash Receptacle(s) Iron**	Adjacent to Trash Receptacle(s) Wire mesh**
61	Florence	SB	Pacific Bl	FS	Broadway	Los Angeles River	1	704-J1	1		2
62	Florence	SB	Pacific Bl	NS	Grand Av	Los Angeles River	1	704-J1	1		1
63	Florence	SB	Pacific Bl	NS	Live Oak St	Los Angeles River	1	704-J1	1		2
64	Florence	NB	Pacific Bl	FS	Live Oak St	Los Angeles River	2	704-J1	1		2
65	ELA	NB	Rowan Av	FS	1st St	Los Angeles River	2	635-D6	1	1	
66	Florence	SB	Santa Fe Av	FS	Florence Av	Los Angeles River	2	674-H7	1	2	
67	Florence	SB	Santa Fe Av	FS	Grand Av	Los Angeles River	1	704-H1	1	1	
68	Florence	SB	Santa Fe Av	NS	Grand Av	Los Angeles River	1	704-H1	1	1	
69	Florence	SB	Seville Av	NS	Broadway	Los Angeles River	1	704-J1	1		1
70	Florence	SB	Seville Av	NS	Grand Av	Los Angeles River	1	704-J1	1		1
71	Florence	NB	Seville Av	NS	Grand Av	Los Angeles River	1	704-J1	1		1
72	Florence	NB	Seville Av	NS	Live Oak St	Los Angeles River	1	704-J1	1		1
73	Florence	SB	Seville Av	NS	Live Oak St	Los Angeles River	1	704-J1	1		2
74	Baldwin Hills	EB	Slauson Av	NS	Overhill Dr	Ballona Creek	2	673-C6	2	1	
75	Florence	EB	Slauson Av	FS	Compton Av	Los Angeles River	1	674-F5	1	1	
76	Florence	EB	Slauson Av	FS	Holmes Av	Los Angeles River	1	674-G5	1	1	
77	Baldwin Hills	WB	Slauson Av	FS	Overhill Dr	Ballona Creek	1	673-C6	2	1	
78	Florence	EB	Slauson Av	NS	Randolph St	Los Angeles River	2	674-G5	1	2	
79	Baldwin Hills	EB	Stocker St	NS	Don Lorenzo Dr	Ballona Creek	1	673-C4	2	1	
80	Baldwin Hills	EB	Stocker St	NS	Don Miguel Dr	Ballona Creek	1	673-C4	2	1	
81	Baldwin Hills	EB	Stocker St	FS	Presidio Dr	Ballona Creek	1	673-E3	2	1	
82	Baldwin Hills	EB	Stocker St	NS	Valley Ridge Av	Ballona Creek	1	673-D3	2	1	
83	Whittier	EB	Telegraph Rd	NS	Telechron Av	San Gabriel River	1	707-C5	1	1	
84	Whittier	WB	Telegraph Rd	FS	Telechron Av	San Gabriel River	1	707-C5	4	1	
85	ELA	EB	Whittier Bl	FS	Eastern Av	Los Angeles River	1	635-F7	1	1	
86	ELA	WB	Whittier Bl	NS	Oakford Dr	Los Angeles River	2	675-H1	1	2	
87	Willowbrook	NB	Wilmington Av	NS	122nd St	Los Angeles River	1	734-G1	2	1	
88	Willowbrook	SB	Wilmington Av	FS	124th St	Los Angeles River	1	734-G1	2	1	
89	Willowbrook	NB	Wilmington Av	NS	Hahn Plaza	Los Angeles River	1	704-G7	2	1	
90	Bassett	EB	Workman Mill Rd	NS	3rd Av	San Gabriel River	1	637-J4	1	1	

NS=Nearside
FS=Farside
MB=Midblock

EXHIBIT E.2
BUS BENCH LOCATIONS FOR MAINTENANCE PROGRAM AT SOUTHERN UNINCORPORATED AREAS OF LOS ANGELES COUNTY

Loc. #	Community	Direction	Street	Corner	Cross Street	Watershed*	No. of units	T.G.	Sup. Dist	Adjacent to Trash Receptacle(s) Iron**	Wire mesh**
91	Bassett	EB	Workman Mill Rd	FS	Crossroad Pkwy	San Gabriel River	1	637-E6	1	1	
92	Bassett	WB	Workman Mill Rd	MB	Crossroad Pkwy	San Gabriel River	1	637-E6	1	1	
93	Bassett	WB	Workman Mill Rd	FS	Don Julian Rd	San Gabriel River	1	637-H5	1	1	
94	Bassett	EB	Workman Mill Rd	FS	Oakman Dr	San Gabriel River	1	637-G5	1	1	
95	Bassett	EB	Workman Mill Rd	FS	Pellissier Pl	San Gabriel River	1	637-E6	1	1	
96	Bassett	WB	Workman Mill Rd	FS	Valley Bl	San Gabriel River	1	637-J4	1	1	
97	Bassett	EB	Workman Mill Rd	FS	Whittier Woods Dr	San Gabriel River	1	637-E6	1	1	
							112			85	18

Number of Non-Ad. bench locations in SD-1	69
Number of Non-Ad. bench locations in SD-2	21
Number of Non-Ad. bench locations in SD-3	0
Number of Non-Ad. bench locations in SD-4	1
Number of Non-Ad. bench locations in SD-5	6
TOTAL	97

Notes: * Dominguez Channel, Malibu, and San Gabriel River Watersheds are subject to NPDES regulations.
Ballona and Los Angeles River Watersheds are not subject to NPDES regulations.
** "Iron" trash receptacles will be maintained by Contractor under this contract;
Wire Mesh trash receptacles will not be maintained under this contract.

P:\aspub\CONTRACT\BEN\TRANSITSTOP NORTH & SOUTH\2008 SOUTH REBID\RFP\[10 Exhibit E South Locations.xls]E.2

NS=Nearside
FS=Farside
MB=Midblock

EXHIBIT E.3
STAND ALONE TRASH RECEPTACLE LOCATIONS FOR MAINTENANCE PROGRAM AT SOUTHERN UNINCORPORATED AREAS OF LOS ANGELES COUNTY

ADD #	STREET	CROSS STREET	DIR	Remark	WATERSHED	SD	ID	NODES
1	108th St	Gramercy Pl	EB	NS	Dominguez Channel	2	703-H5	Y
2	108th St	Gramercy Pl	WB	FS	Dominguez Channel	2	703-H5	Y
3	120th St	Compton Av	EB	FS	Dominguez Channel	2	704-G7	Y
4	135th St	Main St	EB	FS	Dominguez Channel	2	734-C2	Y
5	1st St	Meyler Rd	WB	FS	Dominguez Channel	4	824-A4	Y
6	1st St	Meyler Rd	EB	NS	Dominguez Channel	4	824-A4	Y
7	3rd St	Gage Av	EB	NS	Los Angeles River	1	635-D6	N
8	Agoura Rd	26701 Agoura Rd	WB	MB	Malibu Creek	3	558-G6	Y
9	Altadena Dr	Fair Oaks Av	WB	NS	Los Angeles River	5	535-H5	N
10	Altadena Dr	Fair Oaks Av	EB	NS	Los Angeles River	5	535-H5	N
11	Altadena Dr	Fontanet Way	EB	NS	Los Angeles River	5	536-A5	N
12	Amar Rd	Echelon Av	WB	FS	San Gabriel River	1	638-F5	Y
13	Amar Rd	Indian Summer Av	WB	NS	San Gabriel River	1	638-G5	Y
14	Amar Rd	Millbury Av	WB	NS	San Gabriel River	1	638-A3	Y
15	Amar Rd	Puente Av	EB	NS	San Gabriel River	1	638-A3	Y
16	Amar Rd	Sunkist Av	WB	NS	San Gabriel River	1	638-B3	Y
17	Amar Rd	Sunset Av	EB	FS	San Gabriel River	1	638-C4	Y
18	Amar Rd	Sunset Av	WB	NS	San Gabriel River	1	638-C4	Y
19	Arrow Hwy	Barranca Av	EB	FS	San Gabriel River	5	599-C2	Y
20	Arrow Hwy	Bonnie Cove Av	EB	NS	San Gabriel River	5	599-F2	Y
21	Arrow Hwy	Clydebank Av	WB	NS	San Gabriel River	1	598-H2	Y
22	Arrow Hwy	Valley Center Av	EB	NS	San Gabriel River	5	599-H2	Y
23	Avalon Bl	14714 Avalon Bl	NB	NS	Dominguez Channel	2	734-D4	Y
24	Avalon Bl	14715 Avalon Bl	SB	NS	Dominguez Channel	2	734-D4	Y
25	Avalon Bl	Redondo Beach Bl	NB	FS	Dominguez Channel	2	734-D5	Y
26	Avalon Bl	Redondo Beach Bl	SB	NS	Dominguez Channel	2	734-D5	Y
27	Avalon Bl	San Pedro St	NB	FS	Dominguez Channel	2	734-D3	Y
28	Avalon Bl	San Pedro St	SB	NS	Dominguez Channel	2	734-D3	Y
29	Blanchard St	Alma Av	EB	FS	Los Angeles River	1	635-E7	N
30	Cameron Av	Grand Av	EB	NS	San Gabriel River	5	639-E2	Y
31	Cameron Av	Grand Av	WB	FS	San Gabriel River	5	639-E2	Y
32	Carmenita Rd	Florence Av	NB	NS	San Gabriel River	1	707-C5	Y
33	Carmenita Rd	Lakeland Rd	NB	FS	San Gabriel River	1	707-C6	Y
34	Carmenita Rd	Meyer Rd	NB	FS	San Gabriel River	1	707-C7	Y
35	Carmenita Rd	Meyer Rd	SB	FS	San Gabriel River	1	707-C7	Y
36	Carmenita Rd	Sunshine Av	NB	NS	San Gabriel River	1	707-C7	Y
37	Carmenita Rd	Sunshine Av	SB	NS	San Gabriel River	1	707-C7	Y
38	Carmenita Rd	Walburg St	NB	NS	San Gabriel River	4	707-C3	Y
39	Carson St	Normandie Av	EB	FS	Dominguez Channel	2	764-A6	Y
40	Citrus Av	Laxford Rd	NB	FS	San Gabriel River	1	599-B2	Y
41	Colima Rd	Albatross Rd	EB	NS	San Gabriel River	1	678-G4	Y
42	Colima Rd	Allenton Av	WB	FS	San Gabriel River	4	678-C6	Y
43	Colima Rd	Batson Av	EB	NS	San Gabriel River	4	679-A5	Y
44	Colima Rd	Camino Del Sur	EB	NS	San Gabriel River	4	678-A6	Y
45	Colima Rd	Countrywood Av	WB	NS	San Gabriel River	4	678-E4	Y
46	Colima Rd	Desire Av	EB	NS	San Gabriel River	1	679-B5	Y
47	Colima Rd	Fullerton Rd	WB	FS	San Gabriel River	1	638-A5	Y
48	Colima Rd	Haliburton Rd	WB	FS	San Gabriel River	4	678-E4	Y
49	Colima Rd	Jellick Av	EB	NS	San Gabriel River	1	679-A5	Y
50	Colima Rd	Jellick Av	WB	NS	San Gabriel River	1	679-A5	Y

NS=Nearside, FS=Farside, MB=Midblock

05/28/2008

EXHIBIT E.3
STAND ALONE TRASH RECEPTACLE LOCATIONS FOR MAINTENANCE PROGRAM AT SOUTHERN UNINCORPORATED AREAS OF LOS ANGELES COUNTY

[illegible]	STREET	CROSS STREET	DIR	[illegible]	WATERSHED	[illegible]	[illegible]	NODES
51	Colima Rd	Lake Canyon Dr	EB	FS	San Gabriel River	4	679-E4	Y
52	Colima Rd	Lake Canyon Dr	WB	NS	San Gabriel River	4	679-E4	Y
53	Colima Rd	Otterbein Av	EB	FS	San Gabriel River	4	679-C5	Y
54	Colima Rd	Otterbein Av	WB	NS	San Gabriel River	4	679-C5	Y
55	Colima Rd	Punta Del Este Dr	EB	FS	San Gabriel River	4	678-D5	Y
56	Colima Rd	Stimson Av	WB	NS	San Gabriel River	4	678-C6	Y
57	Colima Rd	Walnut Leaf Dr	EB	NS	San Gabriel River	4	679-F4	Y
58	Colima Rd	Walnut Leaf Dr	WB	NS	San Gabriel River	4	679-F4	Y
59	Compton Bl	Stanford Av	EB	NS	Dominguez Channel	2	734-E4	Y
60	Compton Bl	Stanford Av	WB	NS	Dominguez Channel	2	734-E4	Y
61	Covina Bl	Glen Arden Av	EB	MB	San Gabriel River	5	599-G3	Y
62	Covina Bl	Sunflower Av	WB	FS	San Gabriel River	5	599-G3	Y
63	Crenshaw Bl	132Nd St	SB	FS	Dominguez Channel	2	733-F2	Y
64	Crenshaw Bl	147Th St	SB	NS	Dominguez Channel	2	733-F4	Y
65	Crenshaw Bl	154Th St	SB	FS	Dominguez Channel	2	733-F5	Y
66	Crenshaw Bl	Marine Av	SB	FS	Dominguez Channel	2	733-F5	Y
67	El Segundo Bl	Ocean Gate Av	EB	FS	Dominguez Channel	2	733-B2	Y
68	El Segundo Bl	Shoup Av	EB	NS	Dominguez Channel	2	733-B2	Y
69	El Segundo Bl	Wilton Pl.	WB	FS	Dominguez Channel	2	733-H1	Y
70	Fair Oaks Av	Altadena Dr	SB	FS	Los Angeles River	5	535-H5	N
71	Fair Oaks Av	Altadena Dr	NB	FS	Los Angeles River	5	535-H5	N
72	Florence Av	Central Av	EB	FS	Los Angeles River	2	674-E7	N
73	Florence Av	Graham Av at Blueline	WB	NS	Los Angeles River	1	674-G7	N
74	Florence Av	Graham Av at Blueline (Car	WB	NS	Los Angeles River	1	674-G7	N
75	Florence Av	Graham Av at Blueline	EB	FS	Los Angeles River	1	674-G7	N
76	Francisquito Av	California Av	SB	NS	San Gabriel River	1	638-D3	Y
77	Francisquito Av	Rama Dr	SB	NS	San Gabriel River	1	638-C2	Y
78	Gale Av	7Th Av	EB	FS	San Gabriel River	4	677-J1	Y
79	Gale Av	9Th Av	EB	NS	San Gabriel River	4	678-A1	Y
80	Gale Av	9Th Av	WB	NS	San Gabriel River	4	678-A1	Y
81	Gale Av	Angelcrest Dr / Kwis Av	EB	MB	San Gabriel River	4	678-B1	Y
82	Gale Av	Farmstead Av	EB	NS	San Gabriel River	4	678-C2	Y
83	Gale Av	Fieldgate Av	EB	NS	San Gabriel River	1	678-E2	Y
84	Gale Av	Hacienda Bl	EB	FS	San Gabriel River	4	678-C2	Y
85	Gale Av	Hinnen Av	EB	NS	San Gabriel River	1	678-D2	Y
86	Gale Av	Latchford Av	WB	NS	San Gabriel River	4	677-J1	Y
87	Gale Av	Marchmont Av	EB	NS	San Gabriel River	4	678-C2	Y
88	Gale Av	Stimson Av	EB	NS	San Gabriel River	4	678-D2	Y
89	Grand Av	Cypress St	NB	NS	San Gabriel River	5	599-D4	Y
90	Grand Av	Rowland Av	SB	NS	San Gabriel River	5	599-D6	Y
91	Hacienda Bl	La Subida Dr	NB	NS	San Gabriel River	4	678-B5	Y
92	Hacienda Bl	La Subida Dr	SB	NS	San Gabriel River	4	678-B5	Y
93	Hacienda Bl	Los Altos Dr	NB	FS	San Gabriel River	4	678-B5	Y
94	Hacienda Bl	Maplegrove St	NB	FS	San Gabriel River	1	638-D4	Y
95	Hacienda Bl	Newton St	NB	NS	San Gabriel River	4	678-B4	Y
96	Hacienda Bl	Newton St	SB	NS	San Gabriel River	4	678-B4	Y
97	Hacienda Bl	Pomona Fwy Off Ramp	SB	NS	San Gabriel River	4	678-C2	Y
98	Hacienda Bl	Tetley St	SB	FS	San Gabriel River	4	678-B4	Y
99	Hacienda Bl	Three Palms St	SB	FS	San Gabriel River	4	678-C2	Y
100	Halliburton Rd	Hacienda Bl	EB	FS	San Gabriel River	4	678-B4	Y

NS=Nearside, FS=Farside, MB=Midblock

EXHIBIT E.3
STAND ALONE TRASH RECEPTACLE LOCATIONS FOR MAINTENANCE PROGRAM AT SOUTHERN UNINCORPORATED AREAS OF LOS ANGELES COUNTY

[illegible]	STREET	CROSS STREET	[illegible]	[illegible]	WATERSHED	[illegible]	[illegible]	[illegible]
101	Halliburton Rd	Stimson Av	EB	NS	San Gabriel River	4	678-C4	Y
102	Hawthorne Bl	104Th St	NB	FS	Dominguez Channel	2	703-C5	Y
103	Hawthorne Bl	Lennox Bl	SB	FS	Dominguez Channel	2	703-C6	Y
104	Hill Dr	Potrero Grande Dr	NB	NS	Los Angeles River	1	636-E4	N
105	Holmes Av	68th St	NB	NS	Los Angeles River	1	674-G7	N
106	Imperial Hwy	Carmenita Rd	WB	NS	San Gabriel River	1	737-C1	Y
107	Imperial Hwy	Grovedale Dr	WB	NS	San Gabriel River	4	737-J1	Y
108	Imperial Hwy	Leffingwell Rd	WB	NS	San Gabriel River	1	737-B1	Y
109	Imperial Hwy	Redfern Av	WB	NS	Dominguez Channel	2	703-B6	Y
110	Imperial Hwy	Shoemaker Av	WB	NS	San Gabriel River	1	737-B1	Y
111	Imperial Hwy	Valley View Av	WB	FS	San Gabriel River	4	737-E1	Y
112	Inglewood Av	111Th St	NB	NS	Dominguez Channel	2	703-B6	Y
113	Inglewood Av	111Th St	SB	NS	Dominguez Channel	2	703-B6	Y
114	Inglewood Av	132Nd St	NB	NS	Dominguez Channel	2	733-B2	Y
115	Inglewood Av	132Nd St	SB	FS	Dominguez Channel	2	733-B2	Y
116	Inglewood Av	Lennox Bl	NB	FS	Dominguez Channel	2	703-B6	Y
117	Inglewood Av	Lennox Bl	SB	NS	Dominguez Channel	2	703-B6	Y
118	La Cienega Bl	104Th St	NB	NS	Dominguez Channel	2	703-A5	Y
119	La Cienega Bl	111Th St	NB	NS	Dominguez Channel	2	703-A6	Y
120	La Mirada Bl	Hornell St	NB	FS	San Gabriel River	4	707-G6	Y
121	La Mirada Bl	Hornell St	SB	NS	San Gabriel River	4	707-G6	Y
122	La Mirada Bl	Leffingwell Rd	NB	FS	San Gabriel River	4	707-G6	Y
123	La Mirada Bl	Mulberry Dr	SB	FS	San Gabriel River	4	707-G5	Y
124	La Puente Rd	Nogales St	EB	FS	San Gabriel River	5	679-C2	Y
125	La Puente Rd	Sentous St	EB	NS	San Gabriel River	5	679-C1	Y
126	Lake Av	Altadena Dr	NB	NS	Los Angeles River	5	536-A5	N
127	Lake Av	Mariposa St	SB	NS	Los Angeles River	5	536-A6	N
128	Lake Av	Mendicino St	NB	NS	Los Angeles River	5	536-A6	N
129	Lake Av	Mendicino St	SB	FS	Los Angeles River	5	536-A6	N
130	Lake Av	Woodbury Rd	NB	FS	Los Angeles River	5	536-A7	N
131	Lark Ellen Av	Francisquito Av	NB	NS	San Gabriel River	5	638-H3	Y
132	Lark Ellen Av	Francisquito Av	SB	NS	San Gabriel River	5	638-H3	Y
133	Leffingwell Rd	Carmenita Rd	WB	NS	San Gabriel River	1	707-C7	Y
134	Leffingwell Rd	Kibbee Av	EB	NS	San Gabriel River	4	707-H6	Y
135	Leffingwell Rd	Leland Av	EB	NS	San Gabriel River	1	707-C7	Y
136	Leffingwell Rd	Leland Av	WB	NS	San Gabriel River	1	707-C7	Y
137	Leffingwell Rd	Loma Dr	WB	NS	San Gabriel River	4	707-D7	Y
138	Leffingwell Rd	Stamy Rd	WB	NS	San Gabriel River	4	707-G6	Y
139	Leffingwell Rd	Telegraph Rd	WB	FS	San Gabriel River	4	707-E7	Y
140	Leffingwell Rd	Toerge Dr	WB	NS	San Gabriel River	4	707-G6	Y
141	Leffingwell Rd	Valley View Av	EB	FS	San Gabriel River	4	707-E7	Y
142	Leffingwell Rd	Valley View Av	WB	FS	San Gabriel River	4	707-E7	Y
143	Lennox Bl	Freeman Av	EB	NS	Dominguez Channel	2	703-D6	Y
144	Lennox Bl	Freeman Av	WB	NS	Dominguez Channel	2	703-D6	Y
145	Live Oak Av	10th St	WB	NS	Los Angeles River	5	597-F2	N
146	Manhattan Beach Bl	Lemoli Av	WB	FS	Dominguez Channel	2	733-F6	Y
147	Manhattan Beach Bl	Prairie Av	WB	NS	Dominguez Channel	2	733-D6	Y
148	Marine Av	Chadron Av	WB	FS	Dominguez Channel	2	733-F5	Y
149	Marine Av	Crenshaw Bl	WB	FS	Dominguez Channel	2	733-F5	Y
150	Marine Av	Lemoli Av	EB	FS	Dominguez Channel	2	733-F4	Y

NS=Nearside; FS=Farside, MB=Midblock

EXHIBIT E.3
STAND ALONE TRASH RECEPTACLE LOCATIONS FOR MAINTENANCE PROGRAM AT SOUTHERN UNINCORPORATED AREAS OF LOS ANGELES COUNTY

[illegible]	STREET	CROSS STREET	DIR	[illegible]	WATERSHED	[illegible]	[illegible]	[illegible]
151	Marine Av	Lemoli Av	WB	FS	Dominguez Channel	2	733-F4	Y
152	Mendicino St	Lake Av	EB	FS	Los Angeles River	5	536-A6	N
153	Mendicino St	Lake Av	WB	FS	Los Angeles River	5	536-A6	N
154	Mulberry Dr	Calmada Av	EB	NS	San Gabriel River	4	707-D3	Y
155	Mulberry Dr	Calmada Av	WB	FS	San Gabriel River	4	707-D3	Y
156	Mulberry Dr	Colima Rd	WB	FS	San Gabriel River	4	707-F5	Y
157	Mulberry Dr	Greening Av	EB	FS	San Gabriel River	4	707-C3	Y
158	Mulberry Dr	Gunn Av	WB	NS	San Gabriel River	4	707-D4	Y
159	Mulberry Dr	Painter Av	WB	FS	San Gabriel River	4	707-C3	Y
160	Nogales St	La Puente Rd	SB	FS	San Gabriel River	1	679-C2	Y
161	Nogales St	San Jose Av	NB	FS	San Gabriel River	4	679-C2	Y
162	Norwalk Bl	Bexley Dr	SB	NS	San Gabriel River	1	676-J5	Y
163	Norwalk Bl	Slauson Av	NB	FS	San Gabriel River	1	706-J1	Y
164	Pac Coast Hwy	Topanga Cyn Bl	EB	NS	Malibu Creek	3	630-D6	Y
165	Pac Coast Hwy	Topanga Cyn Bl	WB	FS	Malibu Creek	3	630-D6	Y
166	Parkway Dr	Rush St	NB	FS	San Gabriel River	1	637-E5	Y
167	Peck Rd	Rooks Rd	SB	NS	San Gabriel River	1	637-C6	Y
168	Prairie Av	164Th St	NB	NS	Dominguez Channel	2	733-E6	Y
169	Prairie Av	Manhattan Beach Bl	SB	FS	Dominguez Channel	2	733-E6	Y
170	Puente Av	Amar Rd	SB	FS	San Gabriel River	1	638-A3	Y
171	Puente Av	Barrydale St	NB	FS	San Gabriel River	1	638-B2	Y
172	Puente Av	Barrydale St	SB	NS	San Gabriel River	1	638-B2	Y
173	Puente Av	Cagliero St	NB	FS	San Gabriel River	1	638-B2	Y
174	Puente Av	Cagliero St	SB	FS	San Gabriel River	1	638-B2	Y
175	Puente Av	Moccasin St	SB	NS	San Gabriel River	1	637-J3	Y
176	Puente Av	Nelson Av	SB	NS	San Gabriel River	1	637-J4	Y
177	Puente Av	Sauder St	SB	NS	San Gabriel River	1	638-A2	Y
178	Rosecrans Av	Avalon Bl	WB	FS	Dominguez Channel	2	734-D3	Y
179	Rosecrans Av	San Pedro St	WB	FS	Dominguez Channel	2	734-D3	Y
180	Rosemead Bl (St Rte 19)	Thorndale Rd	SB	FS	Los Angeles River	5	566-H5	N
181	Rowland Av	De Lay Av	EB	FS	San Gabriel River	5	599-D6	Y
182	Rush St	Bryce Rd	EB	NS	San Gabriel River	1	637-D4	Y
183	Rush St	Bryce Rd	WB	NS	San Gabriel River	1	637-D4	Y
184	Rush St	Parkway Dr	WB	FS	San Gabriel River	1	637-E5	Y
185	Via Verde St	San Bernardino Fwy Off Ra	WB	NS	San Gabriel River	5	599-H7	Y
186	Via Verde St	San Bernardino Fwy Off Ra	EB	FS	San Gabriel River	5	599-H7	Y
187	San Bernardino Rd	Orange Av	EB	FS	San Gabriel River		598-E5	Y
188	San Gabriel Bl	Lawrence Av	EB	FS	Los Angeles River	1	636-F4	N
189	Santa Fe Av	Del Amo Bl	NB	FS	Dominguez Channel	2	765-B4	Y
190	Santa Fe Av	Del Amo Bl	SB	NS	Dominguez Channel	2	765-B4	Y
191	Santa Fe Av	Florence Av (Can #2)	NB	NS	Los Angeles River	1	674-H7	N
192	Santa Fe Av	Live Oak Av	NB	NS	Los Angeles River	1	704-H1	N
193	7th Av	Pomona Freeway Exit	NB	FS	San Gabriel River	4	677-J1	Y
194	7th Av	Valley Bl	SB	FS	San Gabriel River	1	638-A5	Y
195	Slauson Av	Alburtis Av	WB	NS	San Gabriel River	1	706-H1	Y
196	Slauson Av	Millergrove Dr	EB	NS	San Gabriel River	1	706-H1	Y
197	Slauson Av	Norwalk Bl	WB	NS	San Gabriel River	1	706-J1	Y
198	Sunset Av	Amar Rd	NB	FS	San Gabriel River	1	638-C4	Y
199	Sunset Av	Amar Rd	SB	NS	San Gabriel River	1	638-C4	Y
200	Sunset Av	Blackwood St	SB	NS	San Gabriel River	1	638-C4	Y

NS=Nearside, FS=Farside, MB=Midblock

EXHIBIT E.3
STAND ALONE TRASH RECEPTACLE LOCATIONS FOR MAINTENANCE PROGRAM AT SOUTHERN UNINCORPORATED AREAS OF LOS ANGELES COUNTY

[illegible]	STREET	CROSS STREET	DIR	[illegible]	WATERSHED	[illegible]	[illegible]	[illegible]
201	Sunset Av	Fairgrove Av	SB	FS	San Gabriel River	1	638-C3	Y
202	Telegraph Rd	Ceres Av	NB	FS	San Gabriel River	4	707-D6	Y
203	Telegraph Rd	Florence Av	SB	FS	San Gabriel River	1	707-C5	Y
204	Telegraph Rd	Gunn Av	NB	NS	San Gabriel River	4	707C5	Y
205	Telegraph Rd	Victoria Av	NB	NS	San Gabriel River	4	707-D6	Y
206	Towne Av	Grove St	SB	NS	San Gabriel River	1	601-B2	Y
207	Valinda Av	Doublegrove St	NB	FS	San Gabriel River	5	638-G3	Y
208	Valinda Av	Francisquito Av	NB	NS	San Gabriel River	5	638-G3	Y
209	Valley Bl	9th Av	EB	NS	San Gabriel River	1	638-B6	Y
210	Valley Bl	Alderton Av	WB	FS	San Gabriel River	1	678-J2	Y
211	Valley Bl	California Av	EB	NS	San Gabriel River	1	638-B6	Y
212	Valley Bl	Covina Bl	WB	NS	San Gabriel River	1	637-H3	Y
213	Valley Bl	La Seda Rd	WB	FS	San Gabriel River	1	679-A2	Y
214	Valley Bl	Rancho La Puente Dr	WB	FS	San Gabriel River	1	678-J2	Y
215	Valley Bl	San Angelo Av	WB	FS	San Gabriel River	1	637-H3	Y
216	Valley Bl	Yorbita Rd	WB	NS	San Gabriel River	1	679-A2	Y
217	Valley View Av	Imperial Hwy	NB	FS	San Gabriel River	4	737-E1	Y
218	Valley View Av	Syracuse St	NB	NS	San Gabriel River	4	707-E6	Y
219	Ventura Fwy Off-Ramp	Liberty Cyn Rd	WB	NS	Malibu Creek	3	558-E7	Y
220	Ventura Fwy On-Ramp	Liberty Cyn Rd	EB	FS	Malibu Creek	3	558-E7	Y
221	Ventura Fwy On-Ramp	Lost Hills Rd	WB	FS	Malibu Creek	3	558-G6	Y
222	Vermont Av	190th St	NB	NS	Dominguez Channel	4	764-B2	Y
223	Vermont Av	220th St	NB	FS	Dominguez Channel	2	764-B7	Y
224	Vermont Av	220th St	SB	NS	Dominguez Channel	2	764-B7	Y
225	Vermont Av	232nd St	NB	FS	Dominguez Channel	2	794-B1	Y
226	Vermont Av	Ashbridge Ln	NB	FS	Dominguez Channel	2	794-B3	Y
227	Vermont Av	Carson St	SB	FS	Dominguez Channel	2	764-B6	Y
228	Vermont Av	Javelin St	NB	FS	Dominguez Channel	2	764-B5	Y
229	Vermont Av	Javelin St	SB	FS	Dominguez Channel	2	764-B5	Y
230	Vermont Av	Lindencliff St	SB	NS	Dominguez Channel	2	794-B2	Y
231	Vermont Av	Lomita Bl	SB	NS	Dominguez Channel	2	794-B4	Y
232	Vermont Av	Sepulveda Bl	NB	FS	Dominguez Channel	2	794-B2	Y
233	Washington Bl	Broadway Av	WB	FS	San Gabriel River	1	676-J7	Y
234	Washington Bl	Crowndale Av	WB	FS	San Gabriel River	4	707-B1	Y
235	Washington Bl	Pioneer Bl	EB	NS	San Gabriel River	1	676-H7	Y
236	Washington Bl	Pioneer Bl	WB	NS	San Gabriel River	1	676-H7	Y
237	Washington Bl	Sorenson Av	WB	FS	San Gabriel River	4	707-A1	Y
238	Whittier Bl	11730 E Whittier Bl	EB	NS	San Gabriel River	4	677-B6	Y
239	Whittier Bl	Herbert Av	WB	NS	Los Angeles River	1	635-D4	N
240	Whittier Bl	Oakford Dr (#2)	WB	NS	Los Angeles River	1	675-H1	N
241	Whittier Bl	Redman Av	EB	FS	San Gabriel River	4	676-J5	Y
242	Wilmington Av	124th St	NB	FS	Los Angeles River	2	734-G1	N
243	Wilmington Av	Cashdan St	NB	NS	Dominguez Channel	2	764-H3	Y
244	Wilmington Av	Del Amo Bl	NB	FS	Dominguez Channel	2	764-H4	Y
245	Wilmington Av	Dimondale Dr	NB	FS	Dominguez Channel	2	764-H4	Y
246	Wilmington Av	El Segundo Bl	NB	FS	Los Angeles River	2	734-G1	N
247	Wilmington Av	Gladwick St	NB	FS	Dominguez Channel	2	764-H3	Y
248	Wilmington Av	Glenn Curtiss St	NB	NS	Dominguez Channel	2	764-H2	Y
249	Wilmington Av	King Drew Ctr Entrnce 100'	SB	FS	Los Angeles River	2	704-G7	N
250	Wilmington Av	University Dr	NB	NS	Dominguez Channel	2	764-H2	Y

NS=Nearside, FS=Farside, MB=Midblock

EXHIBIT E.3
STAND ALONE TRASH RECEPTACLE LOCATIONS FOR MAINTENANCE PROGRAM AT SOUTHERN UNINCORPORATED AREAS OF LOS ANGELES COUNTY

[illegible]	STREET	CROSS STREET	DIR	[illegible]	WATERSHED	[illegible]	[illegible]	[illegible]
251	Workman Mill Rd	Cliota St	EB	NS	San Gabriel River	4	677-B2	Y
252	Workman Mill Rd	Pioneer Bl	WB	FS	San Gabriel River	4	677-A2	N
253	Workman Mill Rd	Rose Hills Rd	WB	FS	San Gabriel River	4	677-B1	N
254	Workman Mill Rd	Viking (Company Name)	NB	MB	San Gabriel River	4	637-D7	N
255	Workman Mill Rd	Zee Medical Service	NB	MB	San Gabriel River	4	637-D7	N

P:\aspub\CONTRACT\BEN\TRANSITSTOP NORTH & SOUTH\2008 SOUTH REBID\RFP\[10 Exhibit E South Locations.xls]E.5

NS=Nearside, FS=Farside, MB=Midblock

EXHIBIT E.4

STAND-ALONE SOLAR LIGHTING ON POLES FOR MAINTENANCE PROGRAM IN THE SOUTHERN UNINCORPORATED AREAS OF LOS ANGELES COUNTY

Locations with solar light pole model 04-01-A by All Purpose Manufacuring, Inc.

No	Community	Direction	Street	Side	Cross Street	Thomas Guide Page	Capacity Type	Capacity Days	Power Outlet
1	Valinda	WB	Amar Rd	FS	Echelon Av	638-F5	I	1	N
2	La Puente	WB	Amar Rd	FS	Greycliff Av	638-F5	I	1	N
3	Valinda	WB	Amar Rd	NS	Indian Summer Av	638-G5	I	1	N
4	West Covina	EB	Amar Rd	FS	Melham Av	638-D5	I	1	Y
5	La Puente	WB	Amar Rd	NS	Millbury Av	638-A3	I	1	N
6	Valinda	EB	Amar Rd	NS	Puente Av	638-A3	I	1	N
7	La Puente	EB	Amar Rd	FS	Sunset Av	638-C4	I	1	N
8	La Puente	WB	Amar Rd	NS	Sunset Av	638-C4	I	1	N
9	West Covina	WB	Amar Rd	FS	Conlon Av	638-B4	I	1	Y
10	West Covina	EB	Amar Rd	NS	Millbury Av	638-A3	I	1	Y
11	West Covina	WB	Amar Rd	NS	Willow Av	638-B3	I	1	Y
12	W. Covina	WB	Amar Rd	FS	Evanwood Av	638-C4	I	1	N
13	Glendora	EB	Arrow Hwy	NS	19720 Arrow Hwy	599-E2	I	5	Y
14	Glendora	EB	Arrow Hwy	NS	21210 Arrow Hwy	599-G2	I	5	Y
15	Glendora	EB	Arrow Hwy	NS	Clydebank Av	598-H2	I	5	Y
16	Glendora	EB	Arrow Hwy	NS	Banna Av	599-F2	II	5	Y
17	Glendora	EB	Arrow Hwy	NS	Bonnie Cove Av	599-F3	I	5	Y
18	Covina	WB	Arrow Hwy	NS	Fairvalley Av	599-C2	I	1	Y
19	Glendora	EB	Arrow Hwy	NS	Glendora Av	599-E2	II	5	Y
20	Glendora	EB	Arrow Hwy	NS	Sunflower Av	599-G2	I	5	Y
21	West Covina	SB	Azusa Av	NS	Wing Ln	638-H6	I	1	Y
22	Azusa	NB	Citrus Av	FS	First St/Baseline Rd	569-B7	I	1	N
23	Hacienda Heights	WB	Colima Rd	FS	Allenton Av	678-C6	I	4	Y
24	Rowland Heights	EB	Colima Rd	FS	Banida Av	679-C5	I	4	Y
25	Hacienda Heights	WB	Colima Rd	FS	Country Cyn Rd	678-E5	I	4	Y
26	Hacienda Heights	EB	Colima Rd	FS	Dawn Haven Rd	678-E4	II	4	Y
27	Rowland Heights	EB	Colima Rd	NS	Larkvane Rd	678-J5	II	4	Y
28	Rowland Heights	EB	Colima Rd	FS	Nausika Av	679-D5	I	4	Y
29	Rowland Heights	WB	Colima Rd	FS	Nogales St (450'W)	679-B5	II	1	Y
30	Hacienda Heights	EB	Colima Rd	FS	Park Lawn Rd	678-F4	II	4	Y
31	Hacienda Heights	WB	Colima Rd	FS	Park Lawn Rd	678-F4	II	4	Y
32	Rowland Heights	WB	Colima Rd	FS	Paso Real Av	679-B5	II	1	Y
33	Hacienda Heights	EB	Colima Rd	NS	Sierra Ridge Way	678-C6	I	4	Y
34	Rowland Heights	WB	Colima Rd	FS	Ybarra Dr	679-D5	II	4	Y
35	Rowland Heights	EB	Colima Rd	FS	Ybarra Dr	679-D5	I	4	Y
36	West Covina	WB	Covina Bl	FS	Glen Arden Av	599-G3	I	5	Y
37	West Covina	WB	Covina Bl	FS	Mangrove Av	599-E3	I	5	Y
38	West Covina	EB	Covina Bl	NS	Valley Center Av	599-H3	I	5	Y
39	Covina	WB	E Base Line	NS	Citrus Av	569-B7	I	1	N
40	Valinda	EB	Francisquito Av	NS	California Av	638-D3	I	1	N
41	Hacienda Heights	WB	Gale Av	FS	Hacienda Bl	678-C2	II	4	Y
42	Hacienda Heights	EB	Gale Av	FS	Latchford Av	677-J1	I	4	Y
43	West Covina	NB	Hacienda Bl	FS	Francisquito Av	638-E3	II	1	Y
44	Valinda	NB	Hacienda Bl	FS	Maplegrove St	638-D4	I	1	N
45	West Covina	NB	Irwindale Av	FS	Badillo St	598-F5	I	1	Y
46	Glendora	NB	Irwindale Av	NS	San Bernardino Rd	598-F5	I	1	Y
47	West Covina	EB	La Puente Rd	FS	Nogales St	679-C2	I	1	N
48	Rowland Heights	SB	Nogales St	NS	Daisetta St	679-B4	II	1	N
49	Rowland Heights	NB	Nogales St	FS	Daisetta St	679-B4	II	4	Y
50	West Covina	SB	Nogales St	FS	La Puente Rd	679-C2	I	1	N
51	Valinda	SB	Puente Av	FS	Amar Rd	638-A3	I	1	N
52	Valinda	NB	Puente Av	FS	Barrydale St	638-B2	I	1	N
53	Valinda	SB	Puente Av	NS	Barrydale St	638-B2	I	1	N
54	Valinda	NB	Puente Av	FS	Cagliero St	638-B2	I	1	N
55	Valinda	SB	Puente Av	FS	Cagliero St	638-B2	I	1	N

NS=Nearside
FS=Farside
MB=Midblock

EXHIBIT E.4

STAND-ALONE SOLAR LIGHTING ON POLES FOR MAINTENANCE PROGRAM IN THE SOUTHERN UNINCORPORATED AREAS OF LOS ANGELES COUNTY

No.	Unincorporated Area	Flow Line	Street	Side of Street	Cross Street	Thomas Guide Page	Carousel Type	Poles Qty	Photo Taken
56	Covina	EB	Puente Av	FS	Calmgrove Av	599-E6	I	5	Y
57	Covina	EB	Puente Av	FS	De Lay Av	599-D6	I	5	Y
58	Valinda	SB	Puente Av	NS	Moccasin St	637-J4	II	1	N
59	West Covina	SB	Puente Av	NS	Sauder St	638-A2	I	1	Y
60	Industry	SB	Seventh Av	FS	Valley Blvd	638-B5	I	1	N
61	La Puente	NB	Sunset Av	FS	Amar Rd	638-C4	I	1	N
62	Valinda	SB	Sunset Av	NS	Blackwood St	638-C4	I	1	N
63	West Covina	NB	Sunset Av	FS	Blackwood St	638-C4	I	1	Y
64	West Covina	SB	Sunset Av	FS	Fairgrove Av	638-C3	I	1	N
65	West Covina	SB	Valinda Av	NS	Double Grove St	638-G3	I	1	Y
66	West Covina	NB	Valinda Av	FS	Double Grove St	638-G3	I	1	Y
67	West Covina	SB	Workman Mill Rd	FS	Bark Dr	637-G5	I	1	Y
68	West Covina	NB	Workman Mill Rd	FS	Coleford Av	637-F5	I	1	Y
69	Avocado Heights	NB	Workman Mill Rd	FS	Crossroads Pkwy	637-E6	II	1	N
70	Avocado Heights	SB	Workman Mill Rd	FS	Don Julian Rd	637-H5	II	1	N
71	Industry	NB	Workman Mill Rd	NS	Don Julian Rd	637-H5	I	1	Y
72	West Covina	NB	Workman Mill Rd	FS	Fontenoy Av	637-F5	I	1	Y
73	West Covina	SB	Workman Mill Rd	FS	Lomitas Av	637-G5	I	1	Y
74	Avocado Heights	NB	Workman Mill Rd	FS	Oakman Dr	637-G5	II	1	N
75	Industry	SB	Workman Mill Rd	FS	Valley Blvd	637-J4	I	1	Y

Project Summary			
Type I Carousel	Type II Carousel	Total	
19	2	21	poles at bus stops with bus stop shelters in SD-1
22	6	28	poles at bus stops without bus stop shelters in SD-1
7	7	14	poles at bus stops with bus stop shelters in SD-4
10	2	12	poles at bus stops with bus stop shelters in SD-5
58	17	75	project locations

P:\aspub\CONTRACT\BEN\TRANSITSTOP NORTH & SOUTH\2008 SOUTH REBID\RFP\[10 Exhibit E South Locations.xls]E.5

NS=Nearside
FS=Farside
MB=Midblock

EXHIBIT E.5

STAND-ALONE SOLAR LIGHTING ON POLES FOR MAINTENANCE PROGRAM IN THE SOUTHERN REGION OF THE UNINCORPORATED AREAS OF LOS ANGELES COUNTY

Locations with solar light pole model i-STOP® F1 by Carmanah Technology

Arb. No.	UNINCORP. AREA	LOC.	STREET	CROSS STREET		MAP	SQ.
1	Willowbrook	NS	120th St	W/O	Wilmington Av	704-G7	2
2	East Los Angeles	NS	1st St	E/O	Sunol Dr	635-E6	1
3	East Los Angeles	NS	3rd St	W/O	Arizona Av	635 G6	1
4	East Los Angeles	NS	3rd St	W/O	Humphreys Av	635-F6	1
5	East Los Angeles	SS	3rd St	E/O	Humphreys Av	635-F6	1
6	East Los Angeles	NS	3rd St	W/O	La Verne Av	635 G6	1
7	East Los Angeles	NS	3rd Street	W/O	Gage Av	635-D6	1
8	San Pedro	NS	7th St	W/O	Walker St	824-A5	4
9	East Los Angeles	ES	Arizona Av	N/O	Whittier Bl	675-F1	1
10	East Los Angeles	ES	Atlantic Bl	N/O	4th St	635-H7	1
11	East Los Angeles	ES	Atlantic Bl	S/O	Beverly Bl	635-H6	1
12	East Los Angeles	WS	Atlantic Bl	S/O	Beverly Bl	635-H6	1
13	Willowbrook	ES	Avalon Bl	OPP	124th St	734-D1	2
14	Glendora	ES	Azusa Av	N/O	Arrow Hwy	598-J2	1
15	East Los Angeles	NS	Beverly Bl	E/O	Atlantic Bl	635-H6	1
16	Harbor City	NS	Carson St	E/O	Budlong Av	764-A6	2
17	Harbor City	SS	Carson St	OPP	Budlong Av	764-A6	2
18	East Los Angeles	SS	Cesar Chavez Av	E/O	Belvedere Park	635-G5	1
19	East Los Angeles	NS	Cesar Chavez Av	E/O	Gage Av	635-D5	1
20	East Los Angeles	SS	Cesar Chavez Av	E/O	Indiana St	635-D5	1
21	East Los Angeles	NS	Cesar Chavez Av	E/O	Indiana St	635-D5	1
22	Athens	WS	Century Bl	S/O	Vermont Av	704-A4	2
23	East Los Angeles	SS	Cesar Chavez Av	W/O	Dangler Av	635-G5	1
24	East Los Angeles	NS	Cesar Chavez Av	E/O	Dangler Av	635-G5	1
25	East Los Angeles	SS	Cesar Chavez Av	E/O	Ford Bl	635-F5	1
26	East Los Angeles	NS	Cesar Chavez Av	E/O	Ford Bl	635-F5	1
27	East Los Angeles	SS	Cesar Chavez Av	E/O	McDonnell Av	635-F5	1
28	East Los Angeles	NS	Cesar Chavez Av	E/O	McDonnell Av	635-F5	1
29	East Los Angeles	NS	Cesar Chavez Av	E/O	Mednik Av	635-G5	1
30	East Los Angeles	SS	Cesar Chavez Av	W/O	Mednik Av	635-G5	1
31	East Los Angeles	SS	City Terrace Dr	W/O	Bonnie Beach Pl	635-E3	1
32	East Los Angeles	NS	City Terrace Dr	E/O	Rogers St	635-E3	1
33	Hacienda Height	NS	Colima Rd	E/O	Avalo Dr	678-A6	4
34	Florence	WS	Compton Av	S/O	68th St	674-F7	2
35	Florence	WS	Compton Av	N/O	Nadeau St	704-F1	2
36	Florence	ES	Compton Av	S/O	Slauson Av	674-F5	1
37	Hawthorne	WS	Crenshaw Bl	S/O	Manhattan Beach Bl	733-F6	2
38	East Los Angeles	ES	Eastern Av	S/O	Ramona Bl	635-F2	1
39	East Los Angeles	WS	Eastern Av	S/O	Ramona Bl	635-F2	1
40	East Los Angeles	WS	Eastern Av	N/O	City Terrace Dr	635-F3	1
41	Willowbrook	NS	El Segundo Bl	W/O	San Pedro St	734-D1	2
42	Altadena	ES	Fair Oaks Av	N/O	Figueroa Dr	535-H4	5
43	Rosemead	WS	Fair Oaks Av	N/O	Figueroa Dr	535-H4	5
44	Altadena	ES	Fair Oaks Av	S/O	Mariposa St	535-H5	5
45	East Los Angeles	SS	Floral Dr	E/O	Mednik Av	635-G5	1
46	Florence	SS	Florence Av	W/O	Bell Av	674-G7	1
47	Florence	SS	Florence Av	E/O	Central Av	674-E7	2
48	Florence	NS	Florence Av	@	Graham Av	674-G7	1
49	Florence	SS	Florence Av	W/O	Holmes Av	674-G7	1
50	Florence	NS	Florence Av	E/O	Holmes Av	674-G7	1
51	Florence	NS	Florence Av	E/O	Hooper Av	674-F7	2
52	Florence	SS	Florence Av	E/O	Hooper Av	674-F7	2
53	Florence	SS	Florence Av	E/O	Miramonte Bl	674-G7	2
54	Florence	SS	Florence Av	W/O	Mountain View Av	675-A7	1
55	Florence	SS	Florence Av	W/O	Santa Fe Av	674-H7	1
56	La Crescenta	NS	Foothill Bl	E/O	Glenwood Av	534-F1	5
57	East Los Angeles	WS	Garfield Av	N/O	Northside Dr	676-B2	1

EXHIBIT E.5

STAND-ALONE SOLAR LIGHTING ON POLES FOR MAINTENANCE PROGRAM IN THE SOUTHERN REGION OF THE UNINCORPORATED AREAS OF LOS ANGELES COUNTY

AUBRN #	UNINCORP. AREA	LOC	STREET	CRNR	CROSS STREET	MAP	SP
58	Harbor City	WS	Hamilton Av	@	RTD Park N Ride	764-B5	2
59	East Los Angeles	SS	Hammel St	W/O	Brannick Av	635-E5	1
60	East Los Angeles	SS	Hammel St	E/O	Hazard Av	635-E5	1
61	San Gabriel	NS	Hill Dr	E/O	Arland Av	636-E4	1
62	Florence	ES	Holmes Av	S/O	68th St	635-G7	1
63	Florence	ES	Holmes Av	S/O	Randolph St	635-G6	1
64	Whittier	NS	Imperial Hwy	W/O	Burgess Av	737-E1	4
65	Whittier	NS	Imperial Hwy	W/O	Springview Dr	737-F1	4
66	Athens	NS	Imperial Hwy	E/O	Van Buren Av	704-A6	2
67	Athens	SS	Imperial Hwy	W/O	Van Buren Av	704-A6	2
68	Whittier	NS	Imperial Hwy	W/O	Meyer Rd	737-D1	4
69	La Crescenta	WS	La Crescenta Av	S/O	Altura	534-G2	5
70	Altadena	WS	Lake Av	S/O	Fontanet Way	536-A6	5
71	Whittier	NS	Leffingwell Rd	E/O	Arroyo Dr	707-F6	4
72	Santa Fe Spring	SS	Leffingwell Rd	W/O	Meyer Rd	707-D7	1
73	Willowbrook	WS	Main St	N/O	135th St	734-C2	2
74	Willowbrook	ES	Main St	N/O	135th St	734-C2	2
75	Carson	ES	Main St	S/O	Allenhurst St	734-C3	2
76	Hawthorne	SS	Manhattan Beach Bl	W/O	Chadron Av	733-F5	2
77	East Los Angeles	ES	Mednik Av	N/O	3rd St	635-G6	1
78	East Los Angeles	WS	Mednik Av	S/O	3rd St	635-G6	1
79	East Los Angeles	WS	Mednik Av	N/O	Floral Dr	635-G5	1
80	La Crescenta	NS	Montrose Av	E/O	Briggs Av	534-H3	5
81	La Crescenta	NS	Montrose Av	E/O	Rosemont Av	534-G2	5
82	Athens	WS	Normandie Av	N/O	104th St	703-J5	2
83	Harbor City	WS	Normandie Av	OPP	245th St	794-A3	2
84	Harbor City	WS	Normandie Av	S/O	Oakheath Dr	794-A3	2
85	Harbor City	ES	Normandie Av	S/O	Oakheath Dr	794-A2	2
86	Harbor City	WS	Normandie Av	OPP	Pasatiempo Ln	794-A3	2
87	Harbor City	WS	Normandie Av	N/O	Sepulveda Bl	794-A2	2
88	East Los Angeles	SS	Olympic Bl	E/O	Arizona Av	675-F1	1
89	East Los Angeles	NS	Olympic Bl	E/O	Augusta St	675-E1	1
90	East Los Angeles	NS	Olympic Bl	W/O	Ditman Av	675-D1	1
91	East Los Angeles	SS	Olympic Bl	E/O	Herbert Av	675-E1	1
92	East Los Angeles	SS	Olympic Bl	W/O	Marianna Av	675-E1	1
93	East Los Angeles	NS	Olympic Bl	W/O	McBride Av	675-F1	1
94	East Los Angeles	SS	Olympic Bl	E/O	Rowan Av	675-D1	1
95	Florence	WS	Pacific Bl	N/O	Grand Av	704-J1	1
96	Florence	WS	Pacific Bl	N/O	Live Oak Av	704-J1	1
97	San Gabriel	WS	Paramount Bl	S/O	Hill Dr	636-F4	1
98	San Gabriel	SS	Paramount Bl	E/O	Hill Dr	636-F4	1
99	San Gabriel	ES	Potrero Grande Dr	N/O	Arroyo Dr	636-E4	1
100	Willowbrook	SS	Rosecrans Av	W/O	Avalon Bl	734-D3	2
101	Willowbrook	NS	Rosecrans Av	E/O	Main St	734-D3	2
102	Willowbrook	SS	Rosecrans Av	W/O	San Pedro St	734-D3	2
103	Rosemead	WS	Rosemead Bl	N/O	Arcadia Av	566-H7	5
104	Rosemead	ES	Rosemead Bl	S/O	Duarte Rd	596-H1	5
105	Arcadia	ES	Rosemead Bl	S/O	Fairview Av	566-H7	5
106	East Los Angeles	ES	Rowan Av	N/O	Ceasar Chavez Av	635-D5	1
107	San Gabriel	ES	San Gabriel Bl	N/O	Elsmore Dr	636-F4	1
108	San Gabriel	SS	San Gabriel Bl	E/O	Grandview Av	636-F4	1
109	San Gabriel	ES	San Gabriel Bl	N/O	Hill Dr	636-F4	1
110	San Gabriel	WS	San Gabriel Bl	S/O	Rush St	636-F3	1
111	Florence	ES	Santa Fe Av	S/O	Live Oak Av	704-H1	1
112	Harbor City	WS	Sepulveda Bl	S/O	Del Amo Woods Dr	794-A2	2
113	Harbor City	WS	Sepulveda Bl	N/O	Vermont Av	794-B2	2
114	Whittier	SS	Slauson Av	E/O	Alburtis Av	706-H1	1
115	Ladera Heights	SS	Stocker St	W/O	Angeles Vista Bl	673-E3	2

EXHIBIT E.5

STAND-ALONE SOLAR LIGHTING ON POLES FOR MAINTENANCE PROGRAM IN THE SOUTHERN REGION OF THE UNINCORPORATED AREAS OF LOS ANGELES COUNTY

ATP No.	UNINCORP. AREA	LOC	STREET	BRNK	CROSS STREET	MAPBOOK	on
116	Ladera Heights	NS	Stocker St	W/O	Angeles Vista Bl	673-E3	2
117	Ladera Heights	ES	Stocker St	S/O	Don Felipe Dr	673-E3	2
118	Rancho Dominguez	WS	Susana Rd	S/O	Harcourt St	765-B1	2
119	Rancho Dominguez	WS	Susana Rd	S/O	Val Verde Ct	765-B3	2
120	Whittier	NS	Telegraph Rd	W/O	Valley View Av	707-E6	4
121	Whittier	WS	Valley View Av	S/O	Leffingwell Rd	707-E7	4
122	Athens	WS	Vermont Av	N/O	121st St	704-A7	2
123	Harbor City	WS	Vermont Av	N/O	214th St	764-B6	2
124	Harbor City	ES	Vermont Av	S/O	214th St	764-B6	2
125	Harbor City	WS	Vermont Av	N/O	232nd St	794-B1	2
126	Harbor City	WS	Vermont Av	N/O	245th St	794-B3	2
127	Harbor City	ES	Vermont Av	OPP	245th St.	794-B3	2
128	Harbor City	WS	Vermont Av	S/O	Ashbridge Ln	794-B3	2
129	Athens	WS	Vermont Av	N/O	Century Bl	704-A4	2
130	Harbor City	ES	Vermont Av	S/O	Coriander Dr	794-B2	2
131	Harbor City	ES	Vermont Av	S/O	Javelin St	764-B5	2
132	Harbor City	WS	Vermont Av	N/O	Javelin St	764-B5	2
133	Altadena	SS	Washington Bl	W/O	Martelo Av	566-D1	5
134	Marina Del Rey	ES	Washington Bl	S/O	Palawan Way	671-J6	4
135	Altadena	NS	Washington Bl	W/O	Pepper Dr	566-D1	5
136	East Los Angeles	SS	Whittier Bl	W/O	Herbert Av	635-E7	1
137	East Los Angeles	NS	Whittier Bl	W/O	Hoeffner Av	675-H1	1
138	West Los Angeles	SS	Wilshire Bl	E/O	San Vicente Bl	631-J4	3
139	West Los Angeles	NS	Wilshire Bl	E/O	San Vicente Bl	631-J4	3
140	West Los Angeles	NS	Wilshire Bl	W/O	Sawtelle Bl	631-J4	3
141	West Los Angeles	SS	Wilshire Bl	W/O	Sawtelle Bl	631-J4	3
142	Altadena	SS	Woodbury Rd	E/O	Glenrose Av	535-G6	5
143	Hawthorne	ES	Yukon Av	N/O	Marine Av	733-E4	2

Total number of i-Stop solar light poles in SD-1:	**68**
Total number of i-Stop solar light poles in SD-2:	**48**
Total number of i-Stop solar light poles in SD-3:	**4**
Total number of i-Stop solar light poles in SD-4:	**9**
Total number of i-Stop solar light poles in SD-5:	**14**
Total locations in all SD's:	**143**

Note: All Solar light poles in this Exhibit are adjacent to advertising bus stop shelters

P:\aspub\CONTRACT\BEN\TRANSITSTOP NORTH & SOUTH\2008 SOUTH REBID\RFP\[10 Exhibit E South Locations.xls]E.5

EXHIBIT F

BUS STOP SHELTER SPECIFICATIONS FOR MAINTENANCE PROGRAM – SOUTHERN UNINCORPORATED AREAS OF LOS ANGELES COUNTY

SPECIFICATIONS FOR SOUTH COUNTY SOLAR-POWERED BUS STOP SHELTER STRUCTURE (WITH PSA PANELS & WITH NO PSA PANELS)

Welding:

1. All structural shop welds shall be done by electric shielded arc process. Field welds shall be performed by welders certified or approved by the County of Los Angeles and inspected by the Project/Office Engineer. All steel welding shall conform to the latest edition of American Welding Society Standard D1.1. Electrodes shall conform to the latest edition of American Welding Society Standard A5.1, class E70XX (Low Hydrogen).

2. All steel components must be galvanized and welded in accordance with America Welding Society (AWS) D1.1. All aluminum welding shall conform to the latest edition of American Welding Society Standard A5.10, class ER-4043.

Structural Materials:

Extruded aluminum members shall be aluminum 6063-T5 or better. Structural steel shall conform to American Society for Testing and Materials (ASTM) A-36, minimum yield strength of 36,000 psi or of equal/better strength which are readily available. Structural tubing shall have rounded edges and conform to ASTM A501 or A-53 Grade B. All structural framing members and mullions shall be 1-piece seamless extruded tubes of aluminum 6061-T6 or 6063-T5 alloy.

Durability:

Shelters shall be designed to withstand minimum dead loads of 40 psf and minimum wind loads of 75 mph or that required by the latest edition of the Los Angeles County Building Code. Shelters must be designed to withstand a variety of conditions including, at a minimum, inclement weather, salt air, high winds, and bright sunlight.

Paint:

Shelter frame color shall be black. Paint must be applied with baked polyurethane or powder coated finish. All exposed steel and iron components shall be shop galvanized and powder coated after welding and assembly.

SPECIFICATIONS FOR SOUTH COUNTY SOLAR-POWERED BUS STOP SHELTER STRUCTURE (WITH PSA PANELS & WITH NO PSA PANELS)

Structure:

Below is the approximate description and dimensions of the bus stop shelter (equivalent dimensions will be accepted):

1. Style: Tolar Maravilla Style 13NAHP-PMTR, LNI Aurora Series Model-SL 13, or Department approved equal.

2. Shape: Peak Spanish style roof, with the shelter layout based approximately on the designs shown on Exhibit G.2.1 for shelters **with PSA panels,** and as shown on Exhibit G.1.1 for shelters **with no PSA panels.**

3. Roof material: Shall be chemically treated to prevent the accumulation of dirt and dust. Roof tile shall be fire-resistant, with Class A rating. Roof tile shall have Spanish style roof tile profile.

4. Roof dimensions: approx. 13'-8" x 5'-0". The height of roof shall be approximately 1'- 6" from peak to base of roof perimeter and the length of peak of roof shall be approximately 9'- 8".

5. Roof type: Peak Spanish style tile roof. Roof design shall also include two horizontal conduits, one to be used as a gutter and the other will house the electric wiring and serve as a conduit that supports electronic message display device if applicable.

6. Height of shelter: 8'-4" (approx. height to ceiling).

7. Width of shelter: 5'-0". Edge of shelter overhang shall be a minimum of 2'-6" away from edge of sidewalk. Distance between the front and back columns of the right-side panel (facing the shelter from the street) shall be 3'-0" on center, and left-side panel (facing the shelter from the street) shall be 4'-3" on center as shown on Exhibit G.2.2 and Exhibit G.2.3 for shelters **with PSA panels**, and distance between the front and back columns shall be 3'-0" on center as shown on Exhibit G.1.2 and Exhibit G.1.3 for shelters **with no PSA panels**.

8. Decorative iron frame: The rear panel and the one side panel that is facing the oncoming traffic, shall be Maravilla style wrought iron for shelters installed in the South County area as shown in Exhibit G.2.1. Other panel designs, that blend aesthetically with the surrounding community and will protect patrons from the inclement weather, must be approved by the County.

SPECIFICATIONS FOR SOUTH COUNTY SOLAR-POWERED BUS STOP SHELTER STRUCTURE (WITH PSA PANELS & WITH NO PSA PANELS)

9. Two-sided Public Service Announcement (PSA) Panel: Two-sided panel will be placed along one side of the shelter that is not facing the oncoming traffic, as shown on the sketch, to post public service announcements. Each panel shall hold poster with a display area of 46" wide x 67" long and an overall size of 47" wide x 70" long. The frame of the panel shall be welded to the structure and panel shall have a locking mechanism for securing and replacement of posters.

10. Glass or Glazing: Materials used for PSA panels placed against advertisements shall be a minimum thickness of three-eighths (3/8) of an inch clear or tinted tempered safety glass, same thickness of glazing clear or bronze tinted acrylic, polycarbonate, or mar-resistant polycarbonate, or better material approved by the DIRECTOR. At locations experienced with high vandalism, acrylics plastic panel may be used. Optional glazing frames shall be jointed with continuous extruded PVC dry set tubes.

11. All fasteners shall be concealed or vandal-resistant.

12. The shelters are to be anchor bolted to the sidewalk at a minimum of 3" deep into concrete sidewalk with vandal resistant hardware to prevent accidents, vandalism or theft.

Installation of Solar Lighting System (integrated into bus shelter):

1. Solar Panel array shall be 40 watts (W) and consist of Mono or Polycrystalline silicon cells with voltage at peak power of 17 volts (V). Current power shall be 2.36 Amps (A). The solar panel shall have a minimum of a ten-year warranty.

2. Enclosed Power Unit (EPU): The EPU shall be constructed of .090 aluminum or Department approved equal. The solar panel shall be fastened to the EPU using vandal-resistant hardware. The battery, system controls, and Direct Current (DC) inverter ballast shall be housed in the EPU. The EPU shall have a minimum of a ten-year warranty.

3. Solar Lighting Controller: The solar lighting controller shall be protected with a 20A fuse. The fuse shall be in a sealed, weather-resistant holder. The controller shall have a minimum of a five-year warranty.

4. Run Operation for Illumination: Lighting will be on from dusk to dawn.

5. Transformer: The transformer shall be matched to the lamp. The transformer shall have a minimum of a five-year warranty.

SPECIFICATIONS FOR SOUTH COUNTY SOLAR-POWERED BUS STOP SHELTER STRUCTURE (WITH PSA PANELS & WITH NO PSA PANELS)

6. Luminaire: The luminaire shall consist of a Light Emitting Diode (LED) lamp unit with SOL Max-Lite reflector or Department approved equal that provides a minimum average of 0.9 foot-candle (fc) from grade level inside the bus stop shelter. Lamp shall have an average life of a minimum of 100,000 lamp hours and shall be maintenance free. The LED lamp shall be embedded in a platform as one unit for convenience. The reflector shall be constructed of polycarbonate to protect against severe impact and vandalism and shall be mounted to the ceiling with vandal-resistant hardware. The reflector shall be warranted for the life of the system.

7. Battery: The battery shall be Gel-Tech Type, 12 V sealed valve regulated gel cell rated for a minimum of 32 amp-hours at the 100-hour rate or Department approved equal. The battery of the nonadvertising bus stop shelter, when fully charged, shall have a minimum of 72 hours reserve capacity for the overall system. The battery must be maintenance free and use no water and shall have a minimum of a five-year prorated warranty.

8. Self-Test: For ease of maintenance, the system shall be capable of activation during the day via a locking switch or other similar device to test if the system is functioning. Activation of the self-test switch must be possible without opening the EPU or luminaire.

9. Powder Coating: All exterior aluminum components shall be powder coated.

10. Original Manufacturers Specification Sheets: Specification sheets must be provided for all components and the contractor must provide information showing that all products provided conform to our specifications.

11. Drawings: Working drawings showing all systems listed above and their attachment to the shelter must be provided.

12. Solar panel orientation: A platform designed to hold the solar collector is an integral part of the roof design. The platform is designed to pivot and lock into place so that the collectors receive optimum contact with the sun by pointing to the south no matter which direction the shelter is installed in. The pole is installed to rise perpendicular to the roof and is to be powder coated the same color as the roof fascia. Roof style for said shelter is High Peak Roof.

SPECIFICATIONS FOR SOUTH COUNTY SOLAR-POWERED BUS STOP SHELTER STRUCTURE (WITH PSA PANELS & WITH NO PSA PANELS)

Street furniture:

Shelters will have a minimum clearance of 42 inches from any fixed object or other obstruction (i.e., street lights, power poles, trees, face of curb etc.) except for a building or other structure located on private property.

ADA Requirements:

1. Shelters, benches, and trash receptacles shall be in compliance with the Americans with Disabilities Act (ADA) of 1990 and all other applicable State and Federal accessibility laws, whichever is more stringent.

2. To the maximum extent allowed by legal or site constraints, bus stop pads shall have a clear length of 96 inches minimum measured perpendicular to the curb or vehicle roadway edge and a clear width of 60 inches minimum measured parallel to the curb or vehicle roadway edge as shown on Exhibit G.3.

3. There must be a minimum clear floor area of 30 inches by 48 inches within the bus stop shelter. Accessible path of travel must be at least 48 inches wide.

4. The minimum turning space required for a 90-degree turn for a person in a wheelchair from a 36-inch path into another 36-inch path must be at least 36 by 84 inches.

5. All traffic control, installation, and other work performed under this contract must be in compliance with the ADA and its accessibility guidelines.

Other Requirements:

1. Drawings and Calculations: Mechanical drawings and calculations showing method of installation, material to be used, wind loads, and all necessary details must be submitted and approved by Public Works before installation of any systems are allowed. Contractor must also submit calculations showing the solar energy will adequately provide the electricity required in these specifications.

2. Permits: Contractor shall obtain all permits necessary for the work (i.e. Excavation permits, Encroachment permits, etc.), all of which shall be paid at Contractor's own expense.

SPECIFICATIONS FOR SOUTH COUNTY SOLAR-POWERED BUS STOP SHELTER STRUCTURE (WITH PSA PANELS & WITH NO PSA PANELS)

3. Traffic Control: Contractor shall be responsible for setting traffic control at all project sites in compliance with the latest edition of Manual on Uniform Traffic Control Devices issued by the Federal Highway Administration.

4. Workmanship: All construction shall conform to the latest edition of Standard Specifications For Public Works Construction; all work and workmanship found to be substandard or inadequate by Public Works shall be corrected at no cost to the County.

P:\aspub\CONTRACT\BEN\TRANSITSTOP NORTH & SOUTH\2008 SOUTH REBID\RFP\12 EXHIBIT F.1.doc

EXHIBIT F.2

SPECIFICATIONS FOR NON-ADVERTISING BUS STOP BENCH WITH BACK SUPPORT AND ARMREST

General Requirement:

1- The benches are to be anchor-bolted to the sidewalk at a minimum of 3-inches deep into the concrete sidewalk with vandal-resistant hardware to prevent accidents, vandalism, or theft.

2- The benches must be powder-coated to facilitate graffiti abatement and routine maintenance.

3- The installation of the benches must be in compliance with the Americans with Disabilities Act (ADA) and its accessibility guidelines.

Below is the approximate description and dimensions of the bench:

- Shape: The overall contour and design shall be similar to that shown in Exhibit G.4.
- Dimensions: 6'-0" x 2'-7" x 2'-4".
- Seating surface: 1/4" x 2" steel bars and 2.5" O.D. steel pipe.
- Support: 1-1/8" square steel bar.
- Fasteners: 1/2" stainless Zinc Hilti anchors or County approved equal.
- Finish: Polyester powder finish.
- Style: LNI Aurora Series Model BL-6 Bench, Du Mor Bench 58, or Public Works approved equal.
- Color: Black.

SPECIFICATIONS FOR A TRASH RECEPTACLE WITH ALUMINUM LINER AND KEY-LOCKING DOME TOP

1. Style: LNI Aurora Series Model TC-32, Seating Component Model 32 CLTRID, Du Mor Receptacle 84, or Public Works approved equal.

2. Shape: Approximate the design shown in Exhibit G.5.

3. Nominal capacity: 32 gallons.

4. Color: Black

5. Outside frame made of steel slats with aluminum liners that sit inside to contain trash.

6. Mounting Floor mounting with steel angle plates (L-bracket) approximately 2" x 2" or equivalent with a hole for anchoring ½" stainless zinc Hilti anchors into the concrete at a minimum of 3-inches deep to secure receptacle to concrete pad or sidewalk firmly.

7. Placement of Trash Receptacle: Minimum clear distance of 42-inches to any other fixed object as shown in Exhibit G.6.1 for bus stop with concrete improvement and Exhibit G.6.2 for bus stop without concrete improvement.

8. The trash receptacle shall be placed at least 1' – 6" away from the back of the curb and 1' away from the back of curb.

9. Orientation of a Trash Receptacle:
A trash receptacle should always be placed on the right side of the bus stop. The right side of the bus stop is determined by standing at the bus stop and facing the street. A trash receptacle may not be placed differently due to existing objects or geographic constraints without Director/Designee consent.

10. Dome or rain bonnet shall be mounted on top of trash receptacle. The dome or rain bonnet must be firmly secured with locking ring or hinges to the outside frame of the trash receptacle to prevent unauthorized removal of the dome or the inner drum. Dome or rain bonnet and outside trash receptacle frame must have lock hasps for padlock. Contractor will not be responsible for providing padlock.

11. The aluminum liner must be secured with a chain or high tensile strength wire to the frame of the trash receptacle or secured in an alternative way acceptable to Director/Designee to prevent unauthorized removal of the liner.

12. Entire assembly must be powder coated to resist corrosion and weathering.

SPECIFICATIONS FOR A TRASH RECEPTACLE WITH ALUMINUM LINER AND KEY-LOCKING DOME TOP

13. **ADA Requirements:** Trash receptacles shall be installed in compliance with the Americans with Disabilities Act (ADA) of 1990 and all other applicable State and Federal accessibility laws, whichever is more stringent.

P:\aspub\CONTRACT\BEN\TRANSITSTOP NORTH & SOUTH\2008 SOUTH REBID\RFP\14 EXHIBIT F.3.doc

EXHIBIT F.4

SPECIFICATIONS FOR SOLAR-POWERED LIGHT POLE MODELS i-STOP™ F1/EverGEN™ Solar Engine SE-10

EQUIPMENT SPECIFICATIONS:

1) Style: Model No. i-STOP™ F1 or its replacement EverGEN™ Solar Engine SE-10 with LED-4SE luminaire manufactured by Carmanah Technologies Inc., or a Public Works approved equal.

2) Solar Panel: The width and length of the solar panel, including frame, shall have a dimension range from 16 to 36 inches that consist of a minimum area of 400 square inches. The solar panel shall have a minimum output of 25 watts (W) during the peak charging time of 1 p.m. The panel shall consist of Mono or Polycrystalline silicon cells with by-pass diodes to keep broken and/or shaded sections from interfering with the output of the functioning sections. The solar panel must be protected from UV rays and shall have a minimum of a ten-year warranty from output degradation below 25W at peak charging time and panel deterioration. Contractor shall submit supporting electrical power calculation for review.

3) Battery: The battery for the solar light pole, when fully charged, shall have a reserve capacity sufficient to provide the required illumination for a minimum of three days while operating 14.5 hours per day without any solar charging. The battery shall be valve regulated, 12 Volts (V) nominal and rated at least 20 Ampere-Hours (AH) at the 20-hour rate. The battery shall be maintenance free, use solid or gelled electrolyte, and shall have a minimum of a five-year prorated warranty.

4) Electrical wiring and connections: Power conductors connecting the solar panel, charge controller, battery, light controller and luminaire assembly shall be copper, a minimum capacity of stranded No. 14 American Wire Gauge (AWG). All other signal and control wiring shall be copper, and may range from No. 16 to No. 20 AWG. All exposed metallic surfaces from the solar panel frame to the pole shall be grounded with a minimum No. 14 AWG copper conductor that are bonded to a suitably ground rod or a grounding plate. Connectors shall be waterproof. Circuit board and electronic components shall be conformal coated.

5) Light Emitting Diodes (LED): High intensity white LED lamp unit or Public Works approved equivalent that provides a minimum of 2.0 foot candles (fc) of light, above ambient light levels, for the illumination area when measured at the ground. Luminaire shall have a minimum of four LEDs per luminaire assembly.

SPECIFICATIONS FOR SOLAR-POWERED LIGHT POLE MODELS i-STOP™ F1/EverGEN™ Solar Engine SE-10

Each LED shall have an average life of 100,000 lamp hours and will require minimal maintenance. The luminaire shall be embedded in a platform as one unit for convenient replacement. If 25 percent of the LEDs quit working, a minimum of 1.3 fc of light, above ambient light levels, shall still be provided. The luminaire should be adjustable by turning it a minimum of 180 degrees away from the solar panel's orientation to maximize sun exposure and flexibility of lighting area. The luminaire assembly shall have a lens/diffuser as the outermost protective covering. The lens/diffuser shall be constructed to endure severe impact and vandalism and shall be mounted with vandal-proof hardware. The lens shall be shatter-resistant and have a minimum of a one-year warranty.

6) Enclosed Power Unit (EPU): The EPU shall be constructed of corrosion-resistant aluminum covered by the solar panel and shall be weather-resistant and fastened to the pole using tamperproof security hardware. The EPU shall be equipped with a lockable housing area so that the battery, system controller, and DC inverter ballast are secured within the housing area. The EPU shall have a minimum of a ten-year warranty.

7) Solar Lighting Controller: The solar lighting controller must have a "Low Voltage Dropout" setting, or features approved by Public Works, to disconnect all outputs at a certain battery voltage in order to avoid the battery from being discharged fully, harming the battery's recharging ability and shortening its life. Controller must be protected with a fuse that is sealed inside the EPU. The controller shall have a minimum of a five-year warranty.

8) Self-Test: The system shall be equipped with a self-test switch. Activation of the self-test switch must be possible without opening the EPU.

9) Pole: Shall be a round 120-inch-long, 2-inch-diameter, steel pole, or Public Works approved equivalent, with solar panel and battery enclosure unit mounted at the top of the pole. Exhibit G.7 shows the approximate design.

10) Paint: Solar light poles must be painted silver. Paint must be applied with a baked polyurethane finish. All exterior aluminum components shall have polyurethane powder coating.

11) Transit Schedule Display Unit:

SPECIFICATIONS FOR SOLAR-POWERED LIGHT POLE MODELS i-STOP™ F1/EverGEN™ Solar Engine SE-10

Models for Metropolitan Transportation Authority (Metro) shall be manufactured by Laird Plastics [Tel: (718)257-4444]. The unit shall be a rectangular metal cube that is approximately 23-$^{3}/_{8}$ inches high x 8 inches wide x 7 inches long. Approximate designs shown on Exhibit G.8. Display surface must be covered with transparent acrylic panel for clear display and protection purposes. The four display surfaces will be 22-$^{1}/_{8}$ inches high x 5-$^{5}/_{8}$ inches wide. The unit must have sufficient space between the display surface and acrylic panel to accommodate a Metro insert that is 23-$^{1}/_{8}$ inches high x 6-$^{5}/_{8}$ inches wide. The panels must be secured by vandal-resistant screws to safely keep inserts inside the panel. A sample of a Metro display unit may be viewed at the bus stop located on eastbound Cesar Chavez Avenue at nearside of Vignes Street in Los Angeles.

12) Durability:

a. Solar light poles shall be designed to withstand minimum wind loads of 75 mph.

b. Solar light poles must be designed to withstand a variety of conditions including, at a minimum, inclement weather, salt air, high winds, bright sunlight, and earthquakes.

c. All parts and components shall be secured with tamperproof security hardware.

13) Performance Guarantees:

a. Run Operation: Lighting will be from dusk to dawn.

b. Operating Range: Temperature range shall be from –40 degrees Farenheit to +176 degrees Fahrenheit (-40 degrees Celsius to +80 degrees Celsius). Humidity operating range shall be from 20 percent to 90 percent humidity.

c. Illumination Area: The area illuminated by the light shall be a minimum of a 5-foot-diameter circular area on the ground when the light source is 10 feet above the ground.

SPECIFICATIONS FOR SOLAR-POWERED LIGHT POLE MODELS i-STOP™ F1/EverGEN™ Solar Engine SE-10

d. Original Manufacturer's Specification Sheets: Original Manufacturer's Specification Sheets must be provided for all components of the solar light poles.

e. Warranty: The overall integrity of the system shall have a minimum of a two-year warranty.

INSTALLATION REQUIREMENTS:

1) Base: Contractor shall replace, relocate, or reinstall solar light pole with surface-mount method with supporting structural calculations approved by the Director/Designee before work commences.

2) Placement: As shown on Exhibit G.11, the solar light pole must be placed on the right-hand side of the bus shelter when facing the bus shelter from the street or at either side of the bus stop sign pole if there is no bus shelter. Depending on the terrain of each site, the solar light pole must be installed as close as possible to the edge of curb, but no less than 30 inches perpendicular from the edge of curb (36 inches from face of curb) to avoid obstructing the bus path while still allowing adequate clearances for wheelchair access. Alternate locations must be reviewed and approved by Public Works.

3) Mounting of Schedule Display Unit: The top of the transit schedule display unit shall be mounted 5 feet 0 inches +/- ½ inch above the ground so that the information displayed is fully accessible by persons in wheelchairs.

4) Orientation: The solar panel must be oriented to face south to southwest to provide solar charging capacity sufficient to meet all requirements noted herein during the shortest daylight periods of the year.

5) Underground Utility: Contractor must verify and avoid conflicts with underground utilities, if any.

6) Mechanical Drawings: Mechanical drawings showing method of installation, material to be used, and all necessary details must be submitted and approved by Public Works before installation of any systems are allowed.

SPECIFICATIONS FOR SOLAR-POWERED LIGHT POLE MODELS i-STOP™ F1/EverGEN™ Solar Engine SE-10

7) Permits: Contractor shall obtain all permits necessary for the work (i.e. excavation permits, encroachment permits, etc.), all of which shall be paid at Contractor's own expense.

8) Traffic Control: Contractor shall be responsible for setting traffic control at all project sites in compliance with the latest edition of Manual on Uniform Traffic Control Devices issued by the Federal Highway Administration.

9) Workmanship: All construction shall conform to the latest edition of Standard Specifications For Public Works Construction; all work and workmanship found to be substandard or inadequate by Public Works shall be corrected at no cost to the County.

10) American Disabilities Act: All traffic control, installation, and other work performed under this contract must be in compliance with the Americans with Disabilities Act of 1990 (ADA). Light poles must only be installed a minimum of 36 inches from the face of curb and 42 inches on either side of an obstruction.

11) Prior to Public Works acceptance of the solar light pole and its installation, the functionality of the solar light pole shall be demonstrated. The functionality will include illumination area measurements, luminaire output, battery charging capacity, and battery storage capacity at each site.

P:\aspub\CONTRACT\BEN\TRANSITSTOP NORTH & SOUTH\2008 SOUTH REBID\RFP\15 EXHIBIT F.4.doc

EXHIBIT F.5

SPECIFICATIONS FOR SOUTH COUNTY SOLAR POWERED LIGHT POLE MODEL NO. 04-01-A

EQUIPMENT SPECIFICATION:

1) Style: Model No. 04-01-A manufactured by All Purpose Manufacturing, Inc., or Public Works approved equal.

2) Solar Panel: The width and length of the solar panel, including frame, shall have a dimension range from 16 to 36 inches that consist of a minimum area of 400 square inches. The solar panel shall have a minimum output of 25 watts (W) during the peak charging time of 1 p.m. The panel shall consist of Mono or Polycrystalline silicon cells with by-pass diodes to keep broken and/or shaded sections from interfering with the output of the functioning sections. The solar panel must be protected from Ultra Violet rays and shall have a minimum of a ten-year warranty from output degradation below 25W at peak charging time and panel deterioration. Contractor shall submit supporting electrical power calculation for review.

3) Battery: The battery for the solar light pole, when fully charged, shall have a reserve capacity sufficient to provide the required illumination for a minimum of three days while operating 14.5 hours per day without any solar charging. The battery shall be valve regulated, 12 Volts (V) nominal and rated at least 20 Ampere-Hours (AH) at the 20-hour rate. The battery shall be maintenance free, use solid or gelled electrolyte, and shall have a minimum of a five-year prorated warranty.

4) Electrical wiring and connections: Power conductors connecting the solar panel, charge controller, battery, light controller, and luminaire assembly shall be copper with a minimum capacity of stranded No. 14 American Wire Gauge (AWG). All exposed metallic surfaces from the solar panel frame to the pole shall be grounded with a minimum No. 14 AWG copper conductor that is bonded to a suitably ground rod or a grounding plate. All other signal and control wiring shall be copper, and may range from No. 16 to No. 20 AWG. Connectors shall be waterproof. Circuit board and electronic components shall be conformal coated.

5) Light Emitting Diodes (LED): High intensity white LED lamp unit or Public Works approved equivalent that provides a minimum of 2.0 foot candles (fc) of light, above ambient light levels, for the illumination area when measured at the ground. Luminaire shall have a minimum of four LEDs per luminaire assembly. Each LED shall have an average life of 100,000 lamp hours and will require

minimal maintenance. The luminaire shall be embedded in a platform as one unit for convenient replacement. If 25 percent of the LEDs in the luminaire assembly quit working, a minimum of 1.3 fc of light above ambient light levels, shall still be provided. The luminaire should be adjustable by turning it a minimum 180 degrees away from the solar panel's orientation to maximize sun exposure and flexibility of lighting area. The luminaire assembly shall have a lens/diffuser as the outer most protective covering. The lens/diffuser shall be constructed to endure severe impact and vandalism and shall be mounted with vandal-proof hardware. The lens shall be shatter resistant and have a minimum of a one-year warranty.

6) Enclosed Power Unit (EPU): The EPU shall be constructed of corrosion-resistant aluminum covered by the solar panel and shall be weather-resistant and fastened to the pole using tamperproof security hardware. The EPU shall be equipped with a lockable housing area so that the battery, system controller, and DC inverter ballast are secured within the housing area. The EPU shall have a minimum of a ten-year warranty.

7) Solar Lighting Controller: The solar lighting controller must have a "Low Voltage Dropout" setting, or features approved by Public Works, to disconnect all outputs at a certain battery voltage in order to avoid the battery from being discharged fully, harming the battery's recharging ability, and shorting its life. The controller must be protected with a fuse that is sealed inside the EPU. The controller shall have a minimum of a five-year warranty.

8) Self-Test: The system shall be equipped with a self-test switch. Activation of the self-test switch must be possible without opening the EPU.

9) Pole: Shall be a round 120-inch long, 2-inch-diameter, steel pole, or Public Works approved equivalent, with solar panel and battery enclosure unit mounted at the top of the pole. Exhibit G.7 shows the approximate design.

10) Transit Schedule Display Unit: Models manufactured by Transit Information Products (www.transitproducts.com) or Public Works approved equal.

11) Paint: Solar light poles must be painted silver. Paint must be applied with a baked polyurethane finish. All exterior aluminum components shall be polyurethane powder coated.

12) Transit Schedule Display Unit: Two display unit designs are required to accommodate Foothill Transit's maps and schedules. The Type I design is

SPECIFICATIONS FOR SOUTH COUNTY SOLAR POWERED LIGHT POLE MODEL NO. 04-01-A

shown in Exhibit G.9 and the Type II design is shown in Exhibit G.10. Both are described as follows:

Type	Quantity	Overall size (Diametric width x Height	Display size (Diametric width x Height	Graphic Insert size (Width x Height)
I	59	8 1/4" x 24"	8" x 14" (24" perimeter)	24 5/8" x 15 5/8"
II	16	8 1/4" x 32"	8" x 22" (24" perimeter)	24 5/8" x 22 ¾"

Units must be aluminum carousels mount directly onto any pole with a diameter of between 1.75 inches to 3.2 inches. The carousel must rotate freely on dual bearings so that the maps and schedules may be fully readable by a stationary observer. Bearings shall be constructed of outdoor-grade materials with stainless steel ball bearings that will not rust, corrode, or require any maintenance, upkeep, or lubrication. A note must be attached to the carousel indicating that the carousel can be rotated. End caps must be smoothly rounded, painted blue using a color code of DU 2268 paint, and shall be alodine dipped prior to polyurethane powder coating to maximize paint life. Display window shall have no seams or obstructions, and shall offer 360 degrees of unobstructed viewing area, and shall be suitable for long-term exposure to the weather, UV rays, and the outdoor elements. The display area shall be covered with a 1/8-inch thick clear abrasion resistant polycarbonate panel for clear display and protection purposes. The unit must have sufficient space between the display surface of the cube and acrylic panel to accommodate a Foothill Transit bus schedule insert with measurements as stated above. All mounting hardware shall be included.

All parts and components of the unit shall be fabricated from weatherproof materials that are suitable for long-term outdoor exposure. Product shall be of durable and vandal resistant design, suitable for long-term use in a public transit environment. All corners shall be smoothly rounded for maximum public safety. Product shall have the capacity to display stainless steel ADA compliant braille and tactile information.

The purpose of the end caps are to restrict the placement of refuse in between the unit body and the mounting rail, retain the polycarbonate display panel, and to allow drainage while denying access to the inserts behind the display panels. The unit must be secured with vandal resistance screws to avoid insert from

being removed easily, while allowing the replacement of insert with no major disassembly of the unit.

An example of a Type I unit may be viewed at the bus stop located on the south side of Huntington Drive east of Mountain Avenue in the City of Monrovia, and an example of a Type II unit may be viewed on west side of Mountain Avenue south of Huntington Drive in the City of Monrovia.

13) Durability:

a. Solar light poles shall be designed to withstand minimum wind loads of 75 mph.

b. Solar light poles must be designed to withstand a variety of conditions including, at a minimum, inclement weather, salt air, high winds, bright sunlight, and earthquakes.

c. All parts and components shall be secured with tamperproof security hardware.

14) Performance Guarantees:

a. Run Operation: Lighting will be from dusk to dawn.

b. Operating Range: Temperature range shall be from –40 degrees Farenheit to +176 degrees Fahrenheit (-40 degrees Celsius to +80 degrees Celsius). Humidity operating range shall be from 20 percent to 90 percent humidity.

c. Illumination Area: The area illuminated by the light shall be a minimum of a five-foot-diameter circular area on the ground when the light source is ten feet above the ground.

d. Original Manufacturer's Specification Sheets: Original Manufacturer's Specification Sheets must be provided for all components of the solar light poles.

e. Warranty: The overall integrity of the system shall have a minimum of a two-year warranty.

SPECIFICATIONS FOR SOUTH COUNTY SOLAR POWERED LIGHT POLE MODEL NO. 04-01-A

INSTALLATION REQUIREMENTS:

1) Base: The solar light poles are currently embedded with 3-foot depth of foundation. In the event of replacement, relocation, or reinstallation, contractor shall install the solar light poles using the surface-mount method with structural calculations approved by the Director/Designee and restore sites in original condition.

2) Placement: As shown on Exhibit G.11, the solar light pole must be placed on the right-hand side of the bus shelter when facing the bus shelter from the street or at either side of the bus stop sign pole if there is no bus shelter. Depending on the terrain of each site, the solar light pole must be installed as close as possible to the edge of curb, but no less than 30 inches perpendicular from the edge of curb (36 inches from face of curb) to avoid obstructing the bus path while still allowing adequate clearances for wheelchair access. Alternate locations must be reviewed and approved by Public Works.

3) Mounting of Schedule Display Unit: The top of the transit schedule display unit shall be mounted 5 feet 0 inches +/- ½ inch above the ground so that the information displayed is fully accessible by persons in wheelchairs.

4) Orientation: The solar panel must be oriented to face south to southwest to provide solar charging capacity sufficient to meet all requirements noted herein during the shortest daylight periods of the year.

5) Underground Utility: Contractor must verify and avoid conflicts with underground utilities, if any.

6) Mechanical Drawings: Mechanical drawings showing method of installation, material to be used, and all necessary details must be submitted and approved by Public Works before installations of any systems are allowed.

7) Permits: Contractor shall obtain all permits necessary for the works (i.e. Excavation permits, Encroachment permits, etc.), all of which shall be paid at contractor's own expense.

8) Traffic Control: Contractor shall be responsible for setting traffic control at all project sites in compliance with the latest edition of the Manual on Uniform Traffic Control Device issued by the Federal Highway Administration.

SPECIFICATIONS FOR SOUTH COUNTY SOLAR POWERED LIGHT POLE MODEL NO. 04-01-A

9) Workmanship: All construction shall conform to the latest edition of the Standard Specifications For Public Works Construction; all work and workmanship found to be substandard or inadequate by Public Works shall be corrected at no cost to the County.

10) American Disabilities Act: All traffic control, installation, and other works performed under this contract must be in compliance with the American with Disabilities Act of 1990 (ADA). Light poles must only be installed a minimum of 36 inches from the face of curb and 42 inches on either side of an obstruction.

11) Prior to acceptance of the solar light pole and its installation by Public Works, the functionality of the solar light pole shall be demonstrated. The functionality will include illumination area measurements, luminaire output, battery charging capacity, and battery storage capacity at each site.

P:\aspub\CONTRACT\BEN\TRANSITSTOP NORTH & SOUTH\2008 SOUTH REBID\RFP\16 EXHIBIT F.5.doc

EXHIBIT G

BUS STOP SHELTER DIAGRAMS FOR MAINTENANCE PROGRAM – SOUTHERN UNINCORPORATED AREAS OF LOS ANGELES COUNTY

DIAGRAM OF SOLAR POWERED / NON-ADVERTISING BUS SHELTER
(NO PSA PANELS) BLACK FRAME AND RED TILE ROOF WITH BACK SUPPORT BENCH

EXHIBIT G.1.1

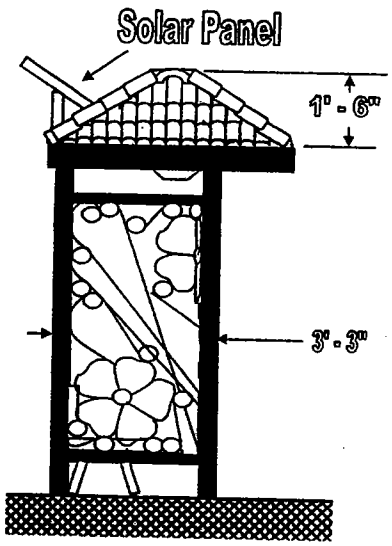

LEFT SIDE ELEVATION

(NOT TO SCALE)

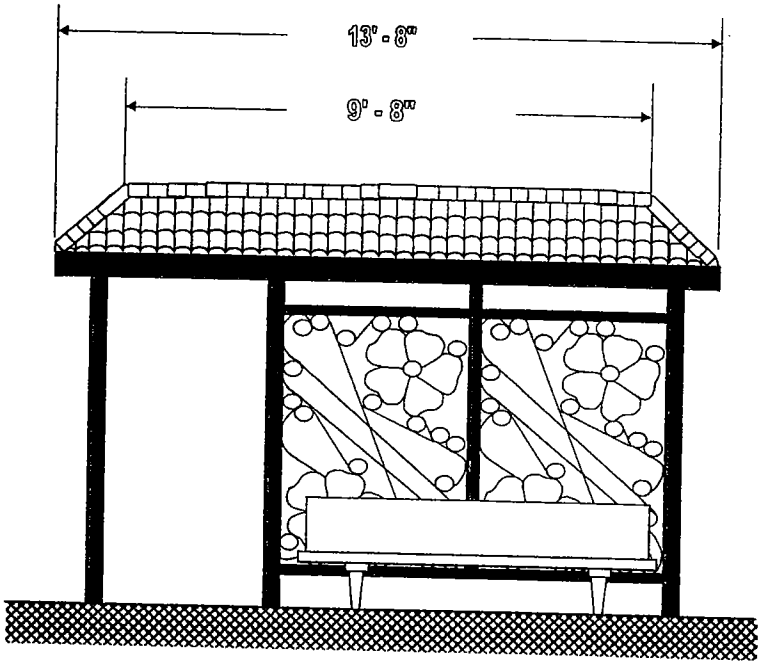

FRONT ELEVATION

(NOT TO SCALE)

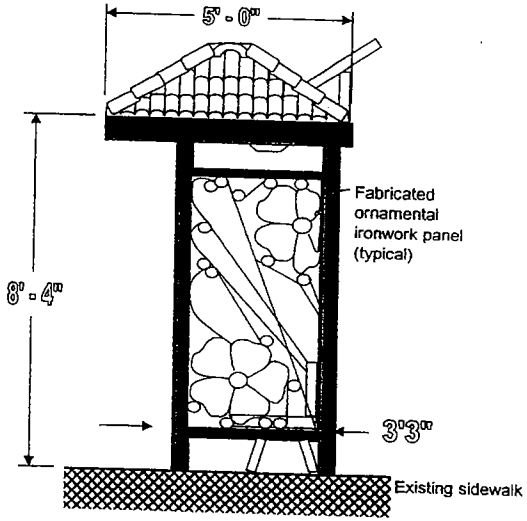

RIGHT SIDE ELEVATION

(NOT TO SCALE)

NOT All dimensions are approximations.

DIAGRAM OF TYPICAL NON-ADVERTISING BUS SHELTER (No PSA Panels)
WITH STREET RIGHT-OF-WAY AND MINIMUM CLEARANCES

EXHIBIT G.1.2

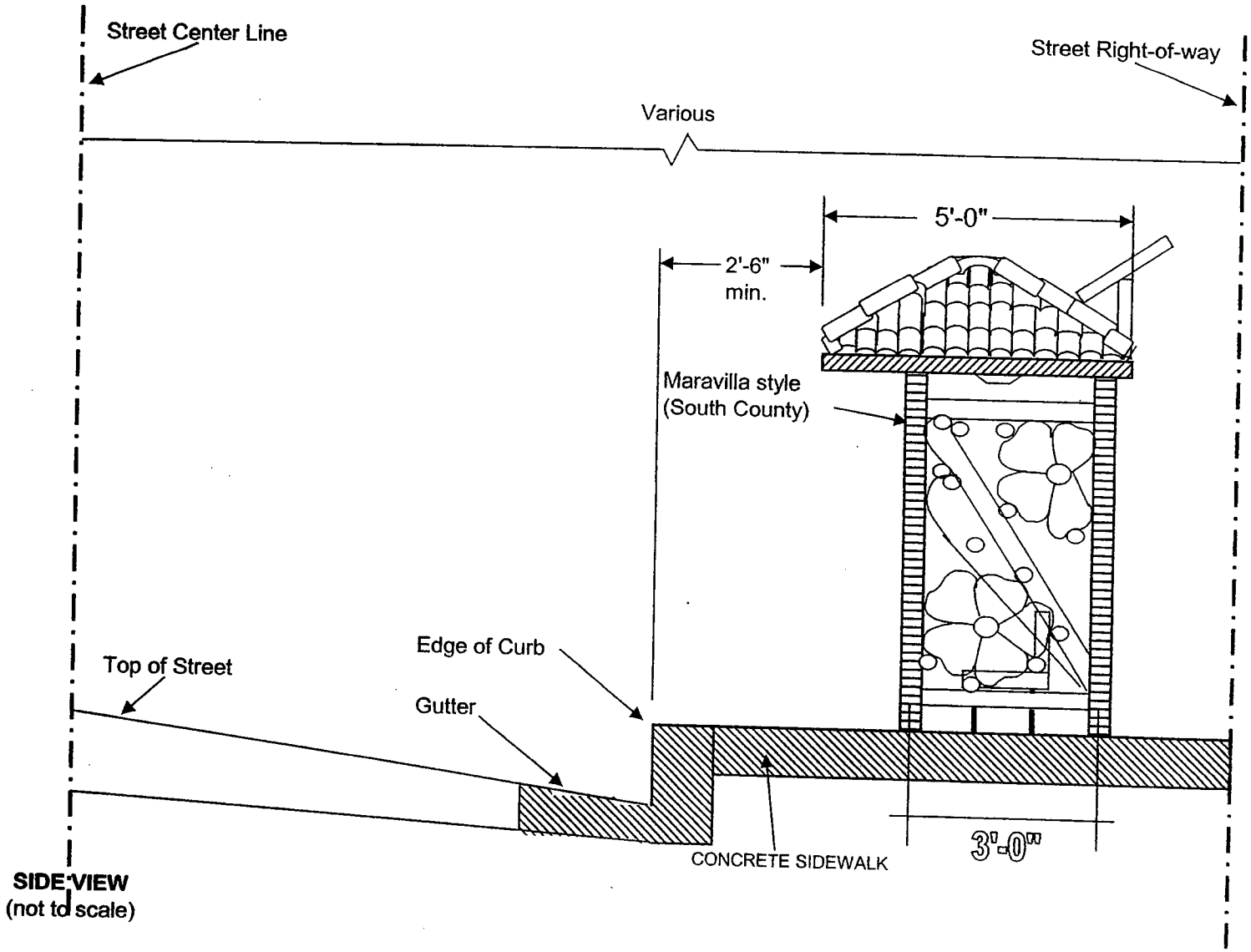

SIDE VIEW
(not to scale)

DIAGRAM OF STREET RIGHT-OF-WAY AND MINIMUM CLEARANCES FOR TYPICAL NON-ADVERTISING BUS SHELTER (NO PSA Panels)

EXHIBIT G.1.3

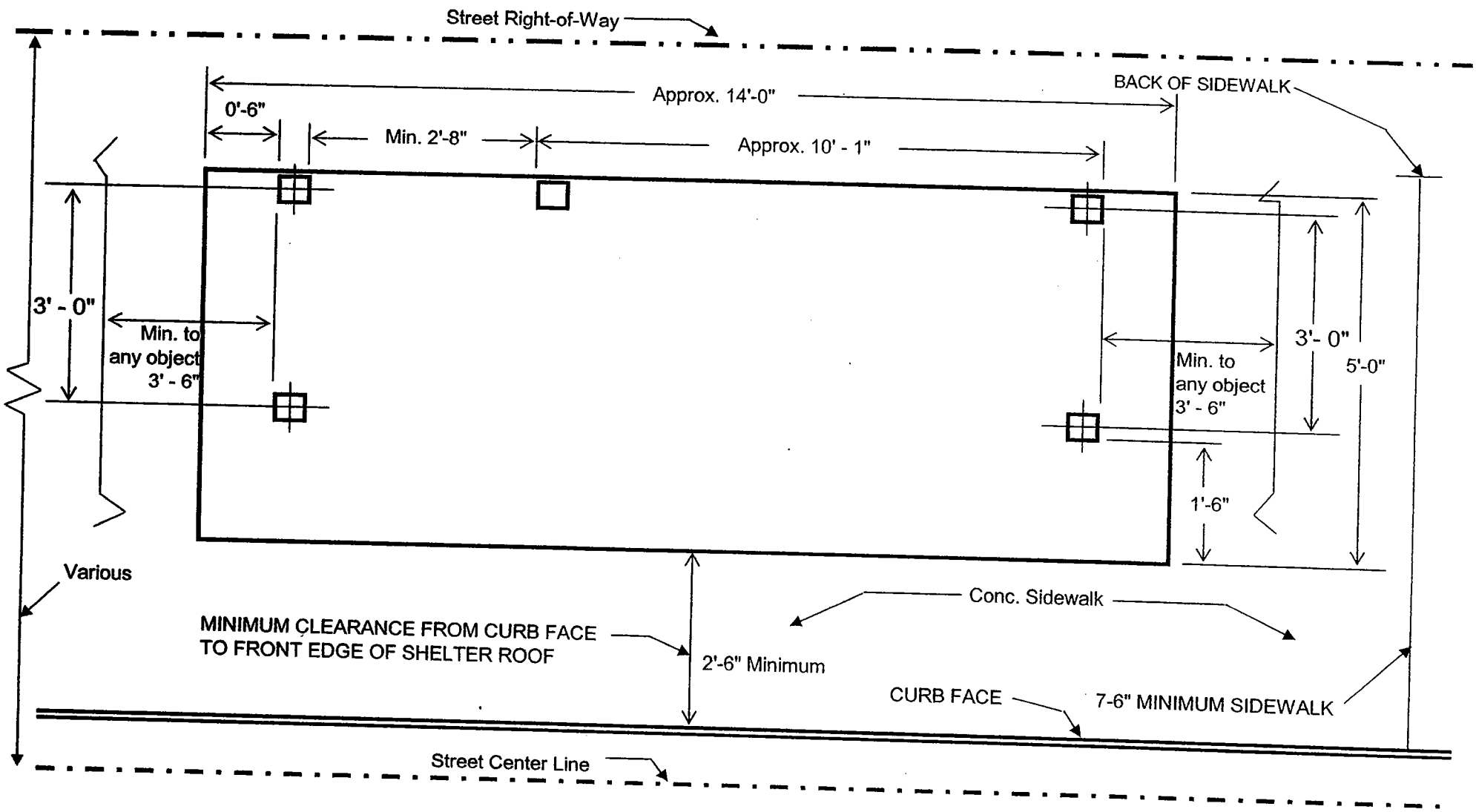

TOP VIEW
(not to scale)

DIAGRAM OF SOLAR POWERED / NON-ADVERTISING BUS SHELTER (WITH PSA PANELS) BLACK FRAME AND RED TILE ROOF WITH BACK SUPPORT BENCH

EXHIBIT G.2.1

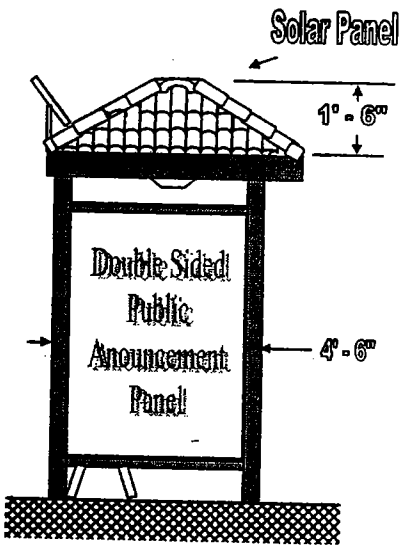

LEFT SIDE ELEVATION

(NOT TO SCALE)

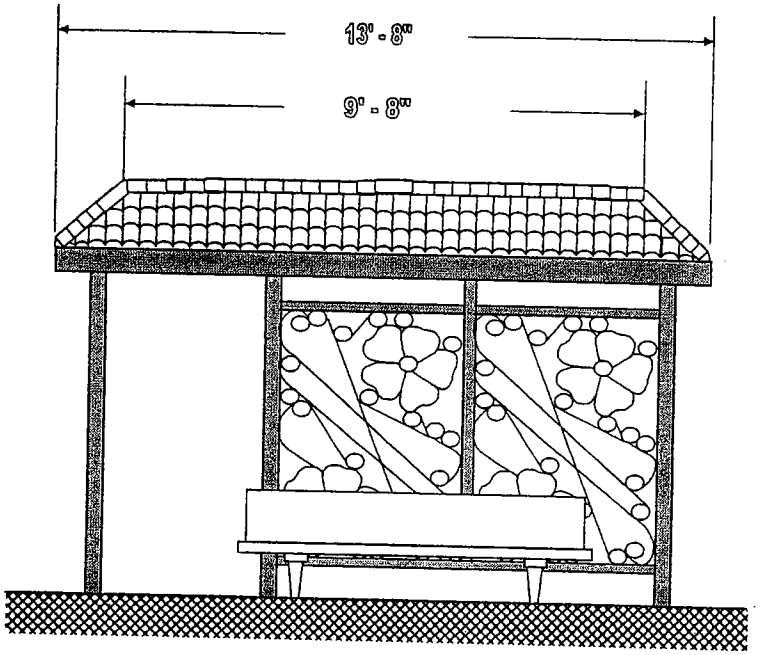

FRONT ELEVATION

(NOT TO SCALE)

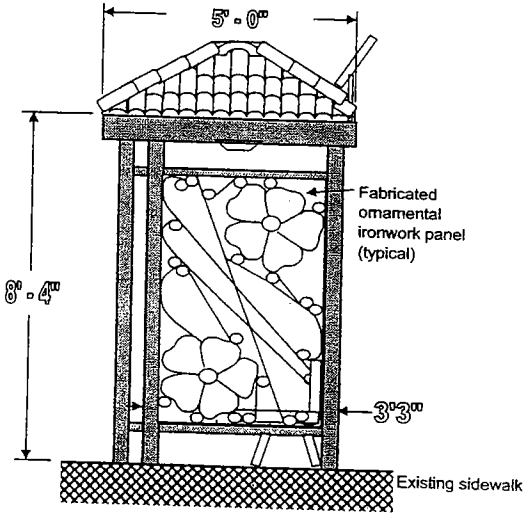

RIGHT SIDE ELEVATION

(NOT TO SCALE)

NOTE: All dimensions are approximations.
The left side has a double-sided public anouncement panel.

05/28/2008, 9:46 AM

DIAGRAM OF TYPICAL NON-ADVERTISING BUS SHELTER (with PSA Panels)
WITH STREET RIGHT-OF-WAY AND MINIMUM CLEARANCES

EXHIBIT G.2.2

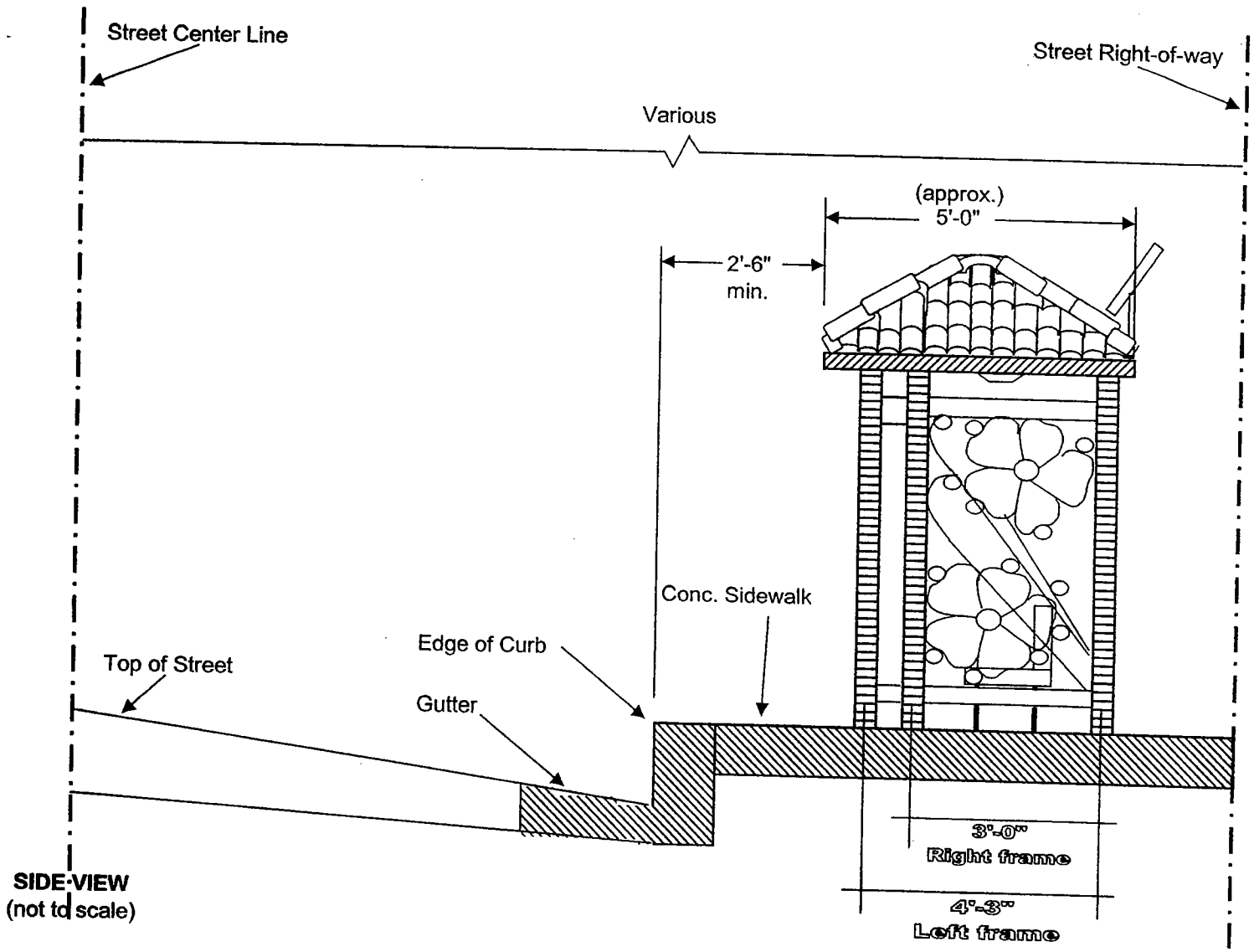

DIAGRAM OF STREET RIGHT-OF-WAY AND MINIMUM CLEARANCES FOR TYPICAL NON-ADVERTISING BUS SHELTER (PSA Panels)

EXHIBIT G.2.3

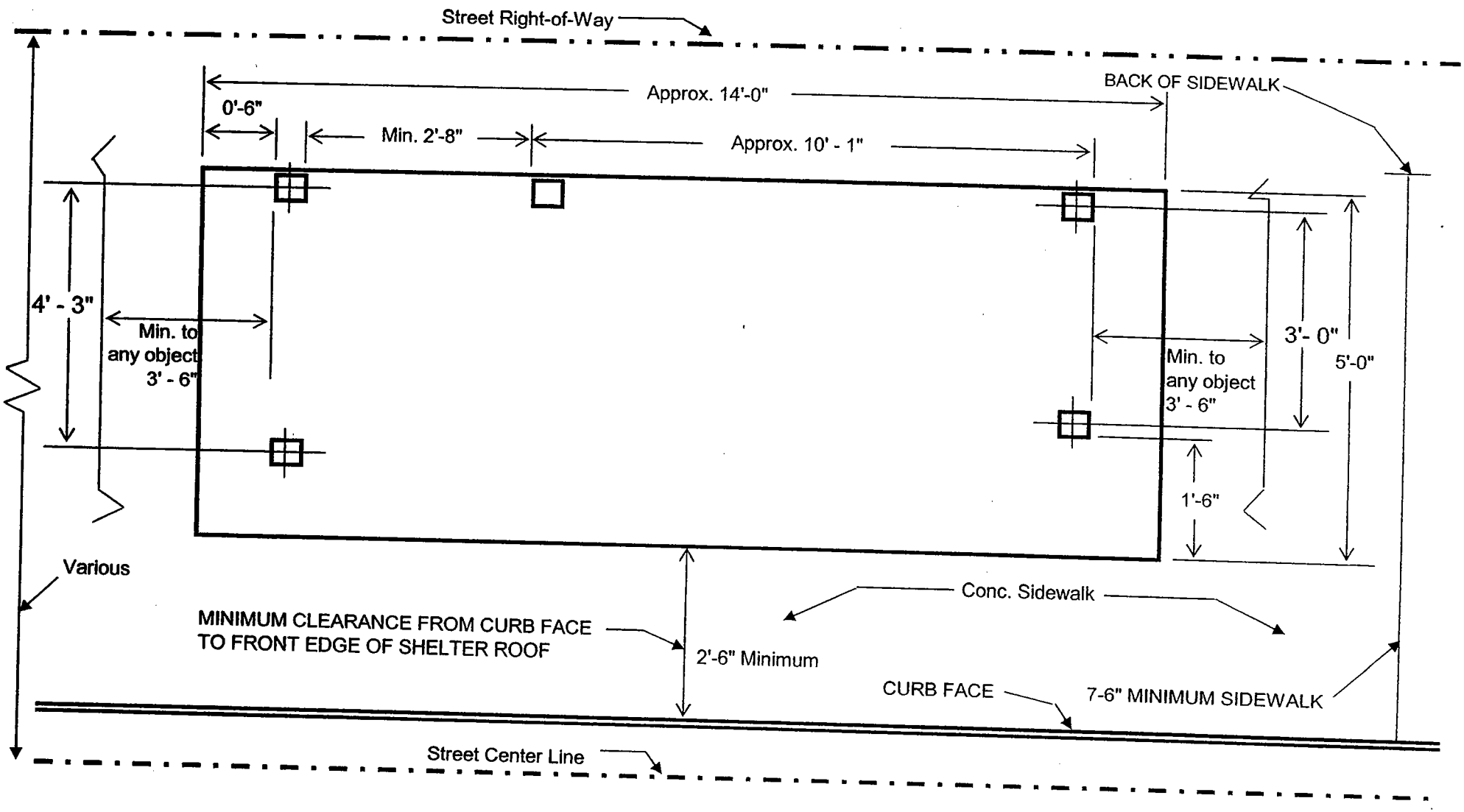

TOP VIEW
(not to scale)

DIAGRAM OF AMERICAN DISABILITIES ACT (ADA) REQUIREMENT FOR BUS STOP

EXHIBIT G.3

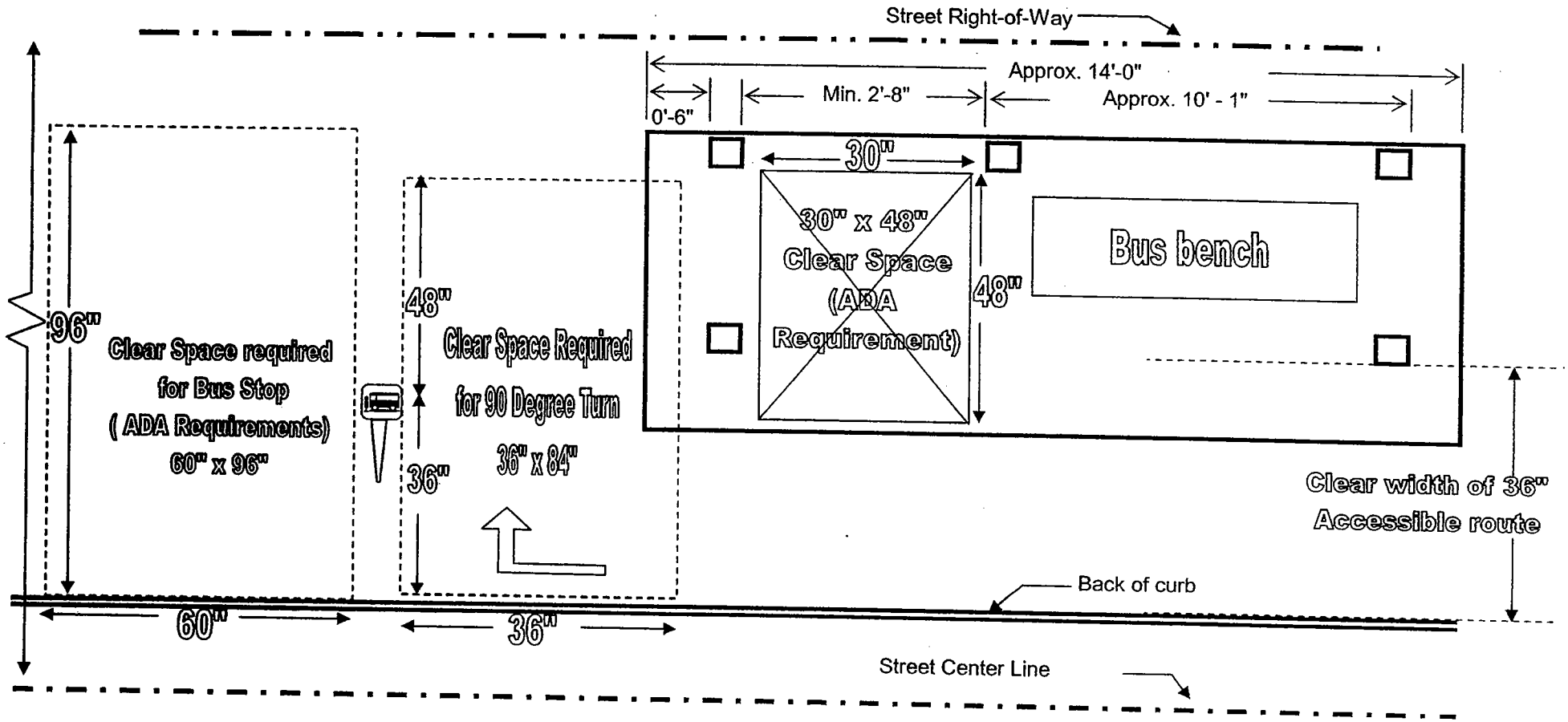

(NOT TO SCALE)

EXHIBIT G.4

Diagram of Black Non-Advertising Metal Bench with Gloss Powder Coated Finish (6' Seating Area)

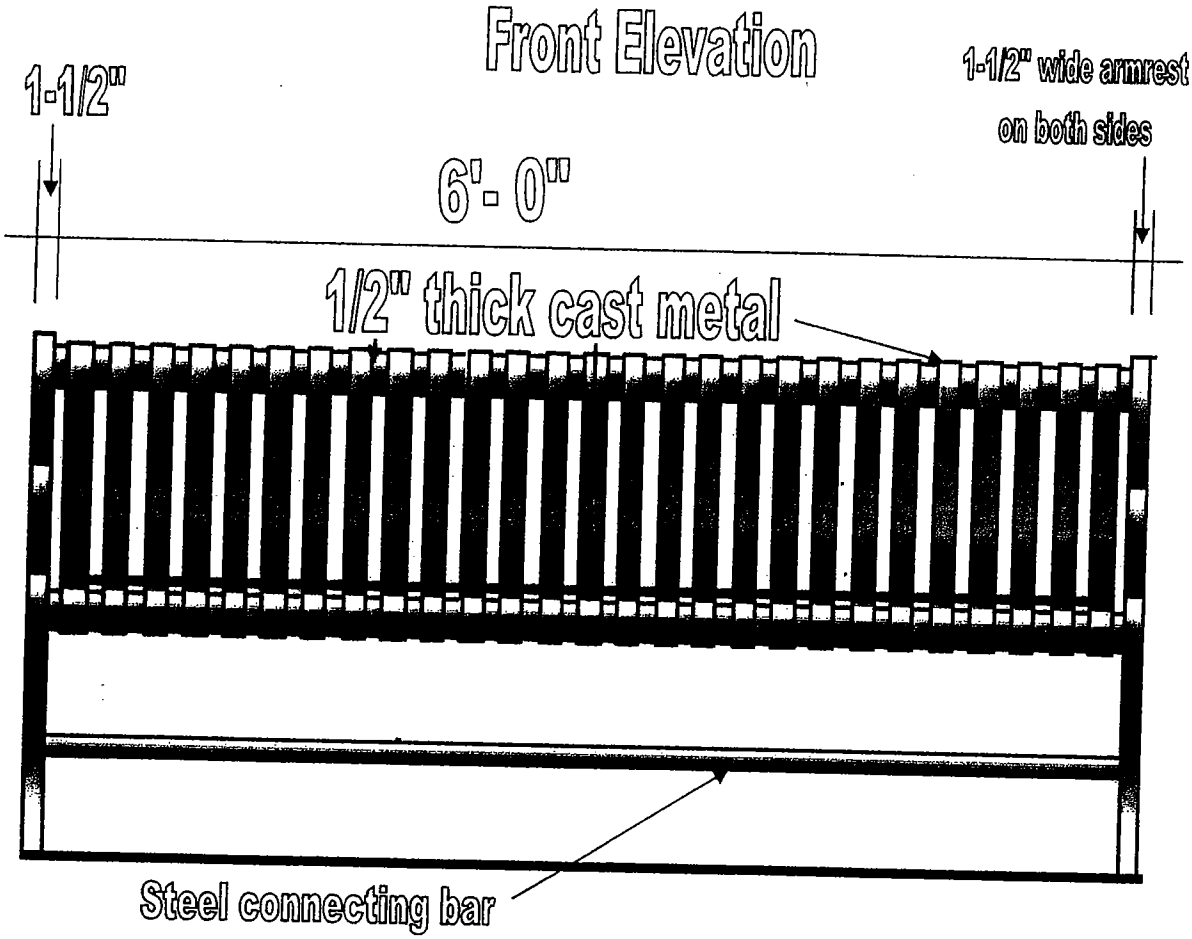

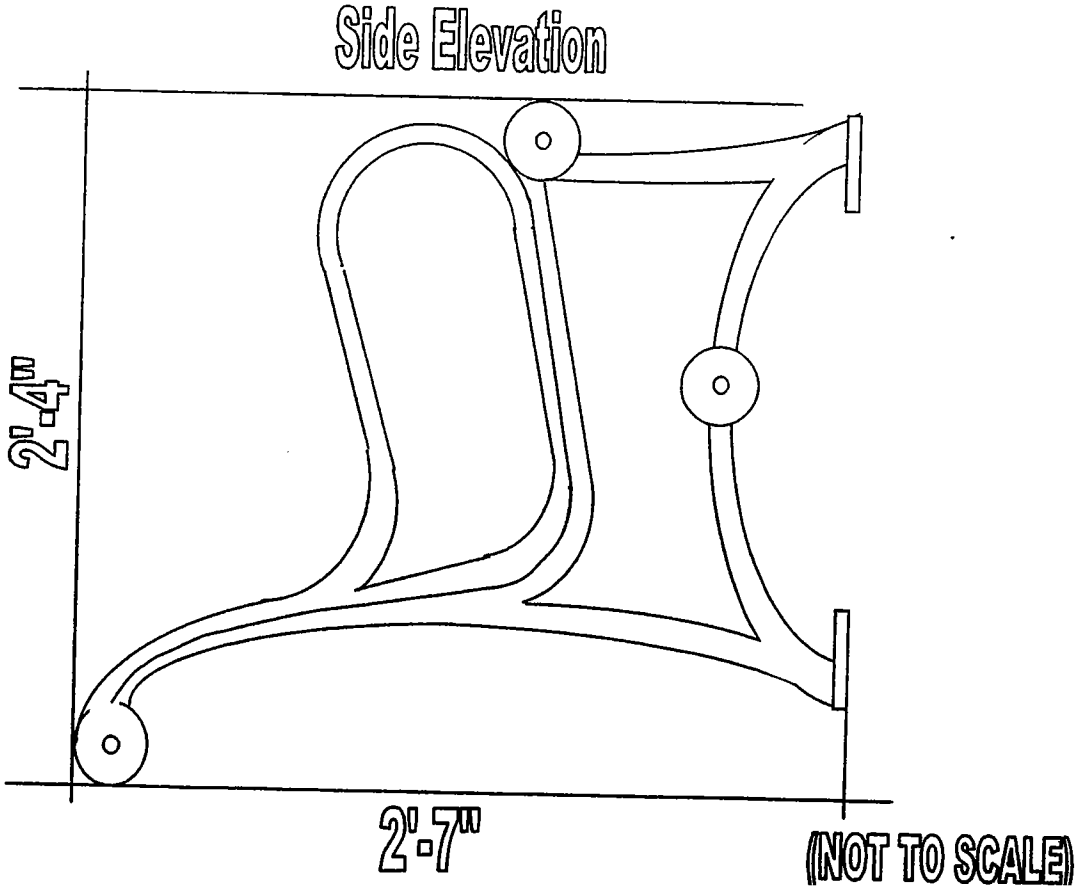

DIAGRAM OF 32-GALLON TRASH RECEPTACLE WITH HARD PLASTIC LINER AND KEY-LOCKING DOME TOP

EXHIBIT G.5

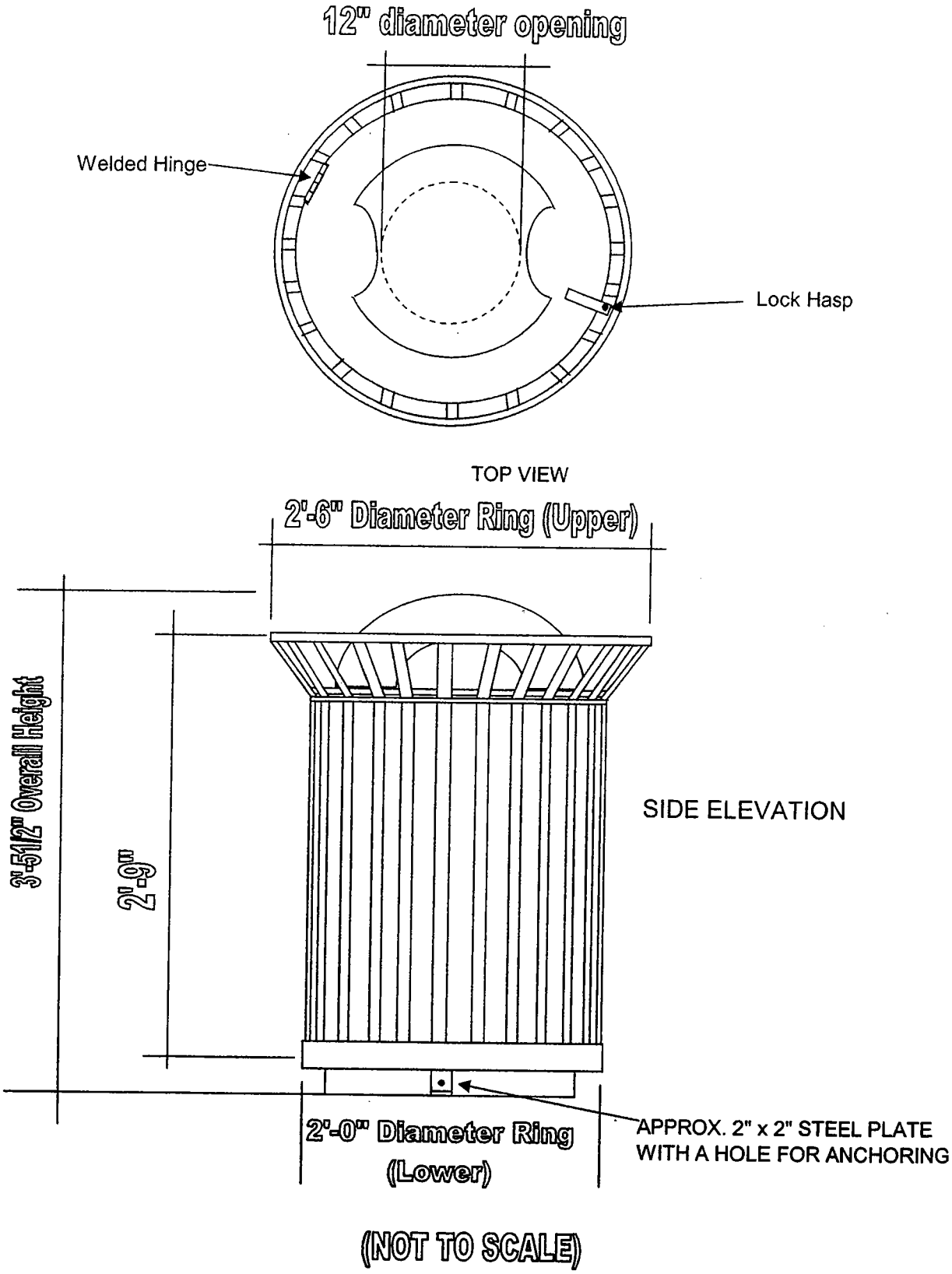

DIAGRAM OF TRASH RECEPTACLE PLACEMENT
AT CONCRETE IMPROVED BUS STOP

EXHIBIT G.6.1

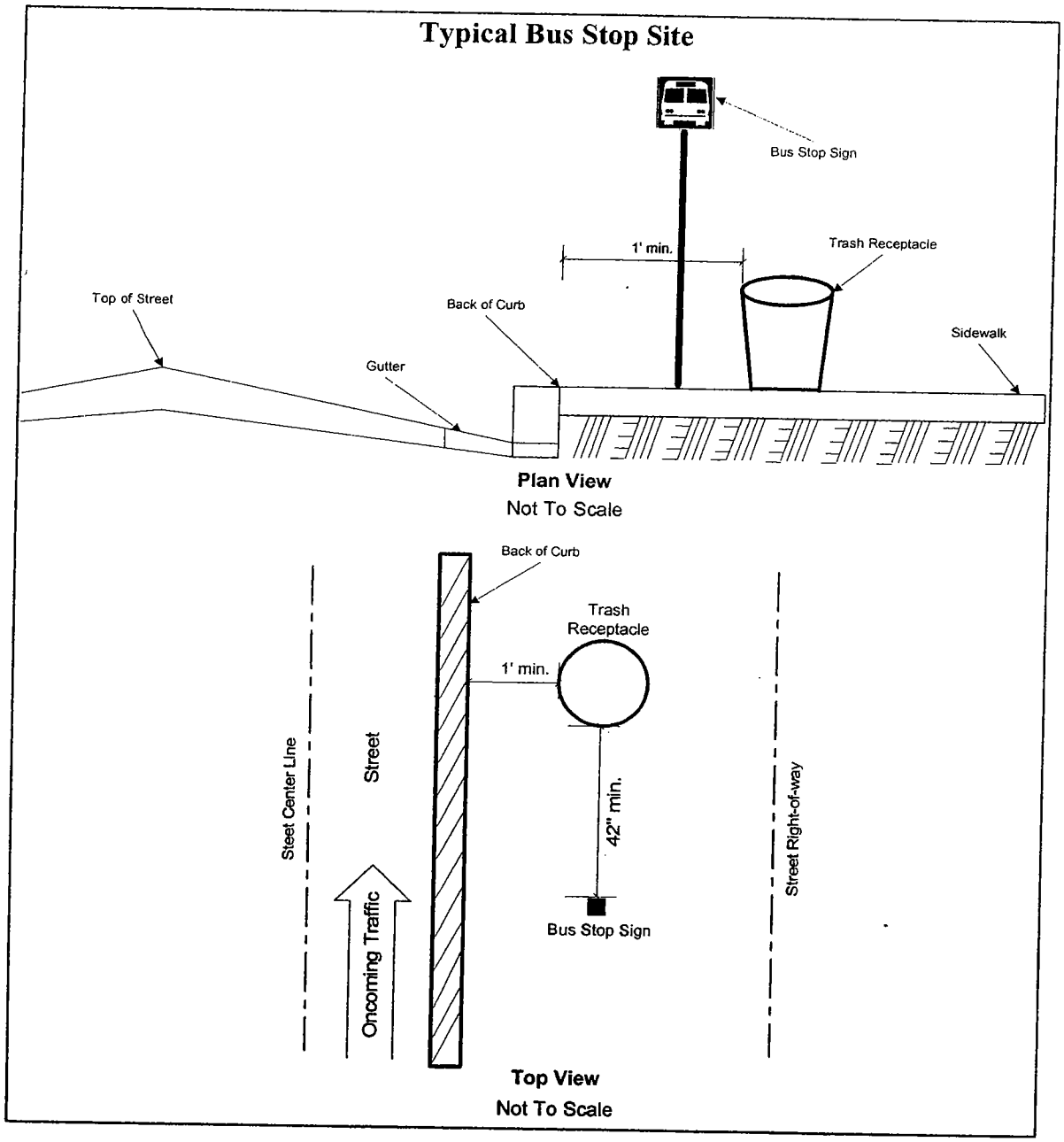

DIAGRAM OF TRASH RECEPTACLE PLACEMENT
AT UNIMPROVED BUS STOP

EXHIBIT G.6.2

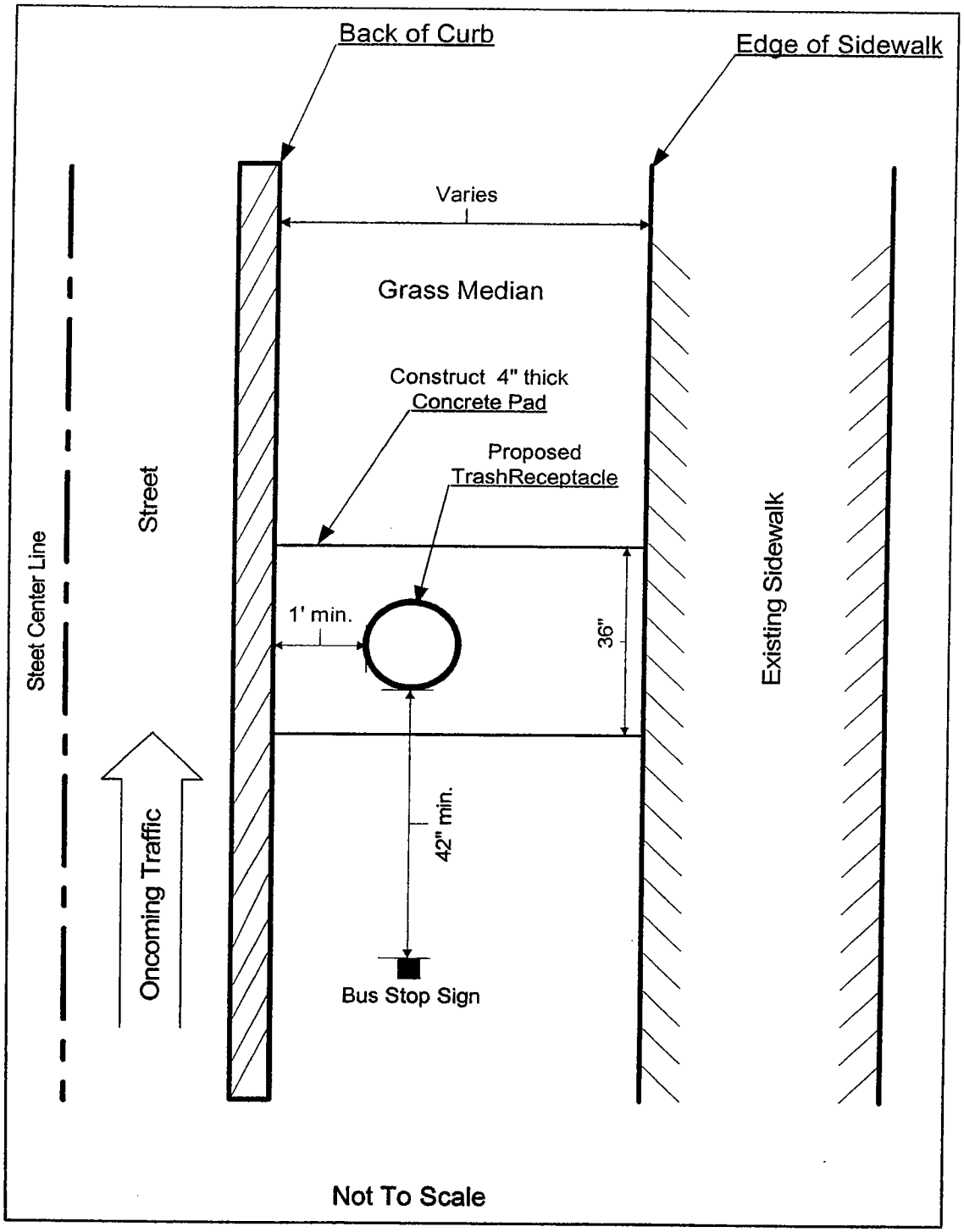

DIAGRAM OF STAND-ALONE
SOLAR POWERED LIGHT POLE

EXHIBIT G.7

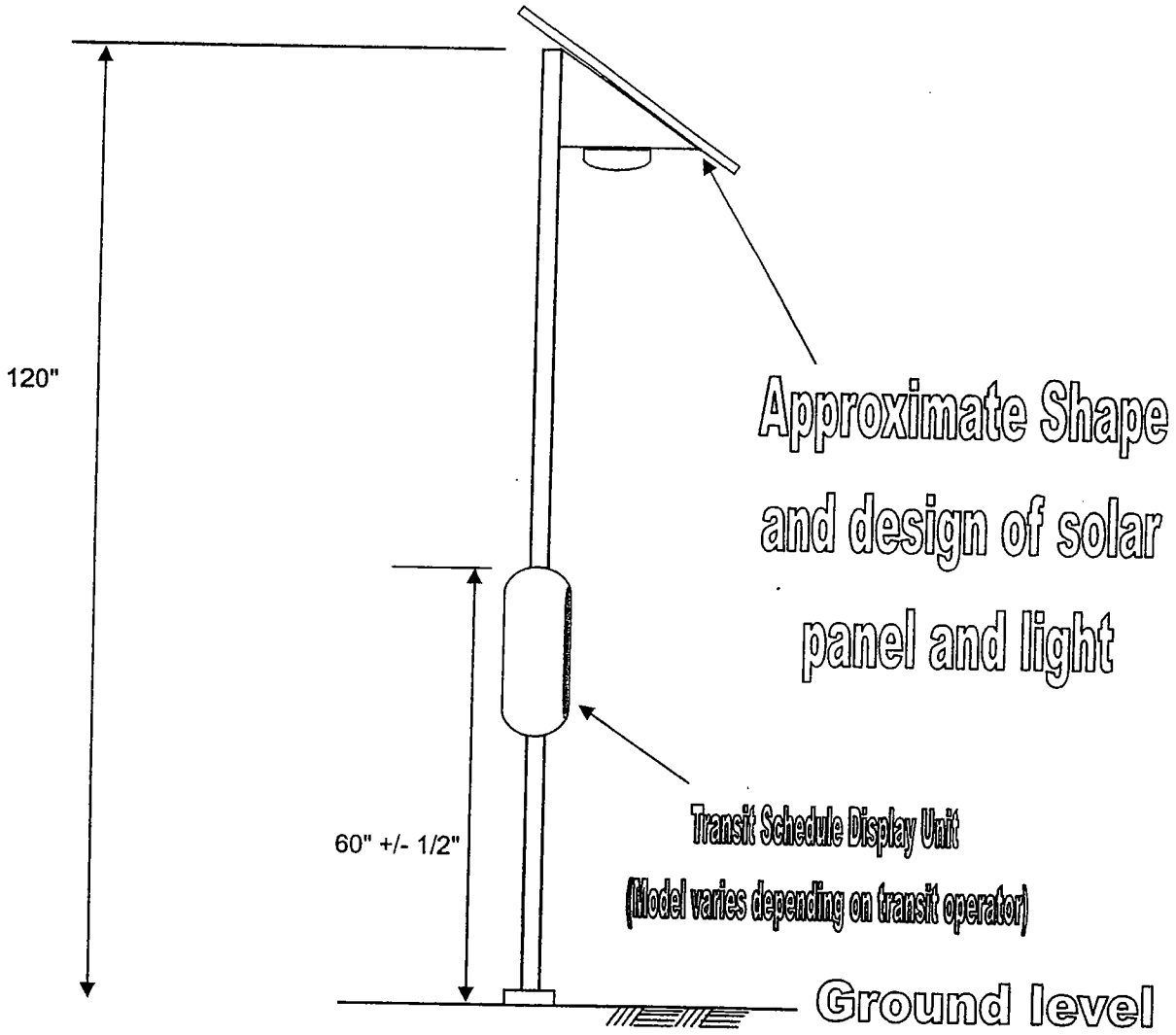

ELEVATION VIEW OF SOLAR-POWERED LIGHT POLE
(DRAWING NOT TO SCALE)

DIAGRAM OF DISPLAY UNIT FOR MTA
BUS SCHEDULES AND ROUTES

EXHIBIT G.8

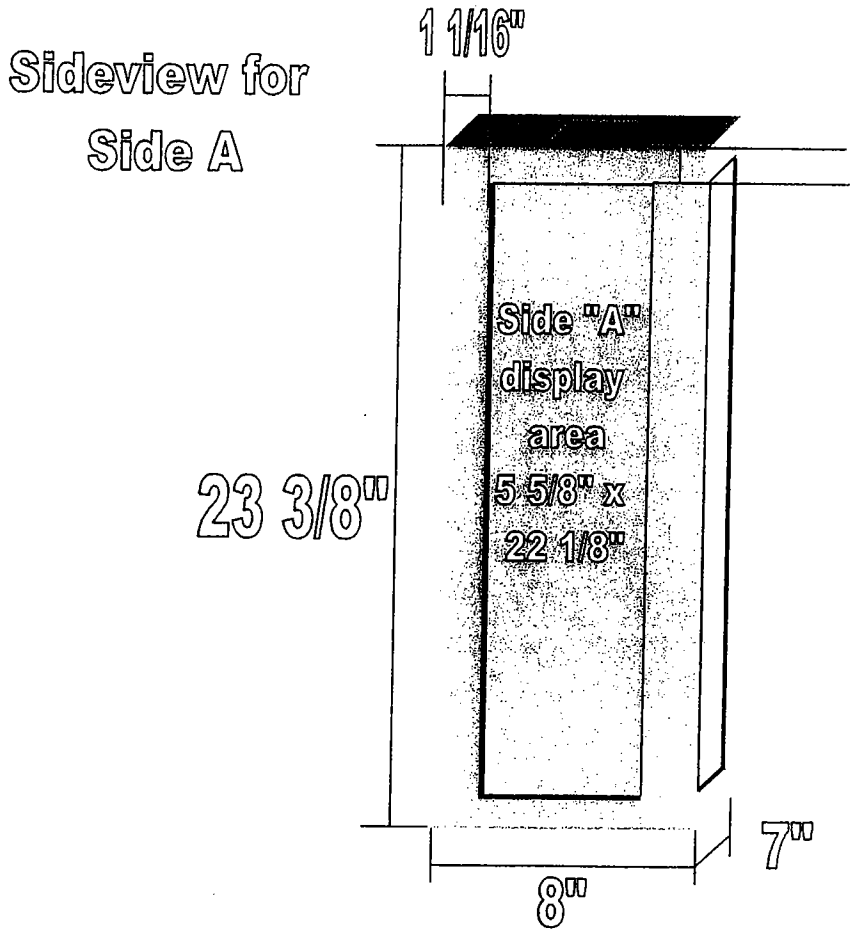

DIMENSIONS ARE APPROXIMATE
(NOT TO SCALE)

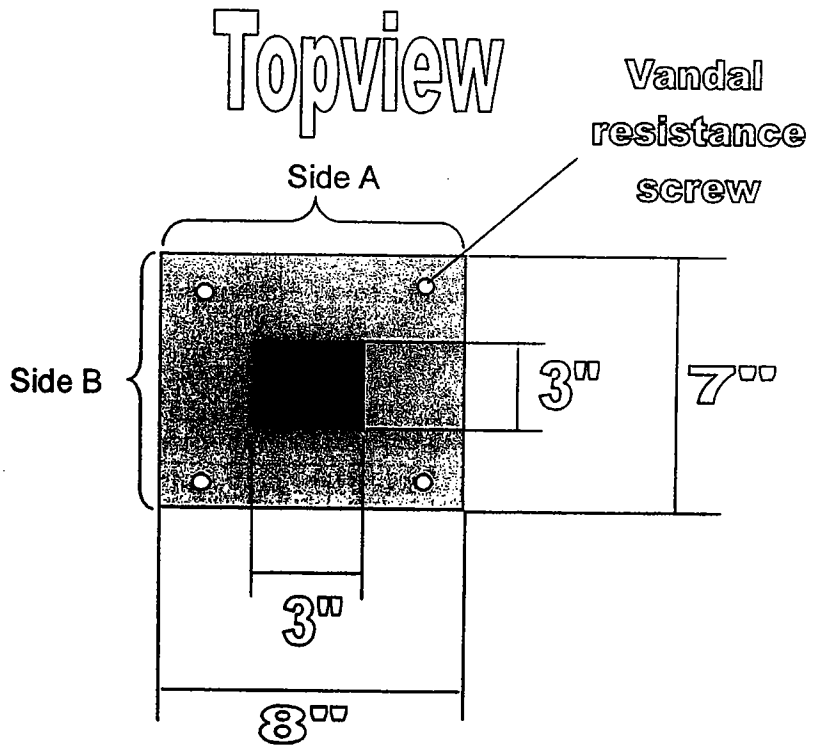

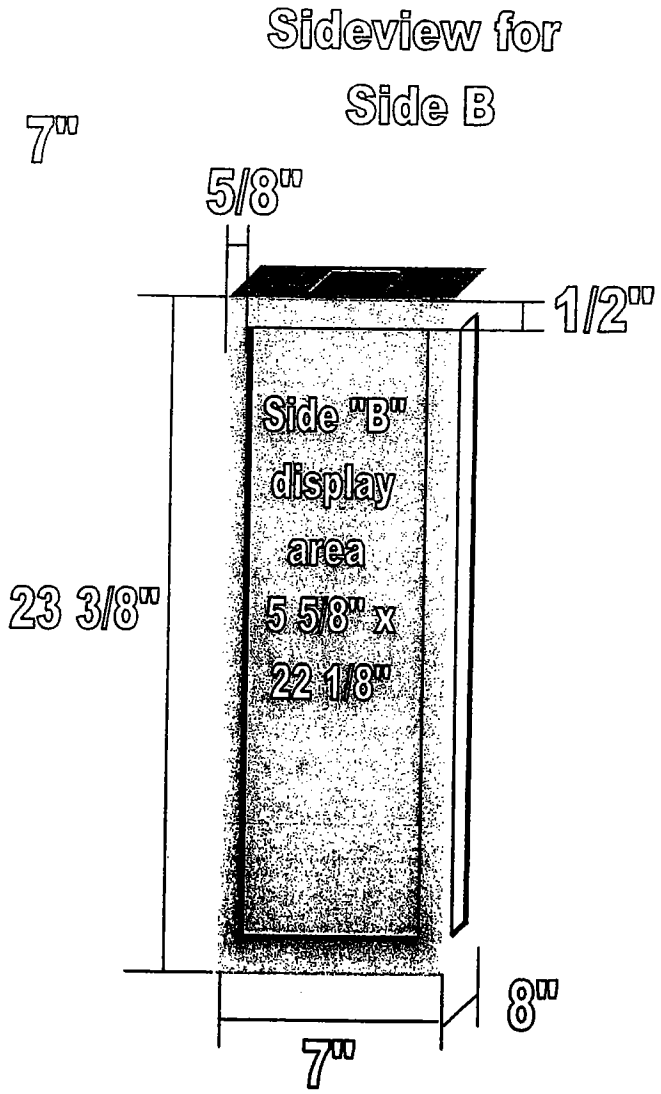

DIAGRAM OF ROUTE/MAP CAROUSEL DISPLAY UNIT
FOR FOOTHILL TRANSIT (Type I)

EXHIBIT G.9

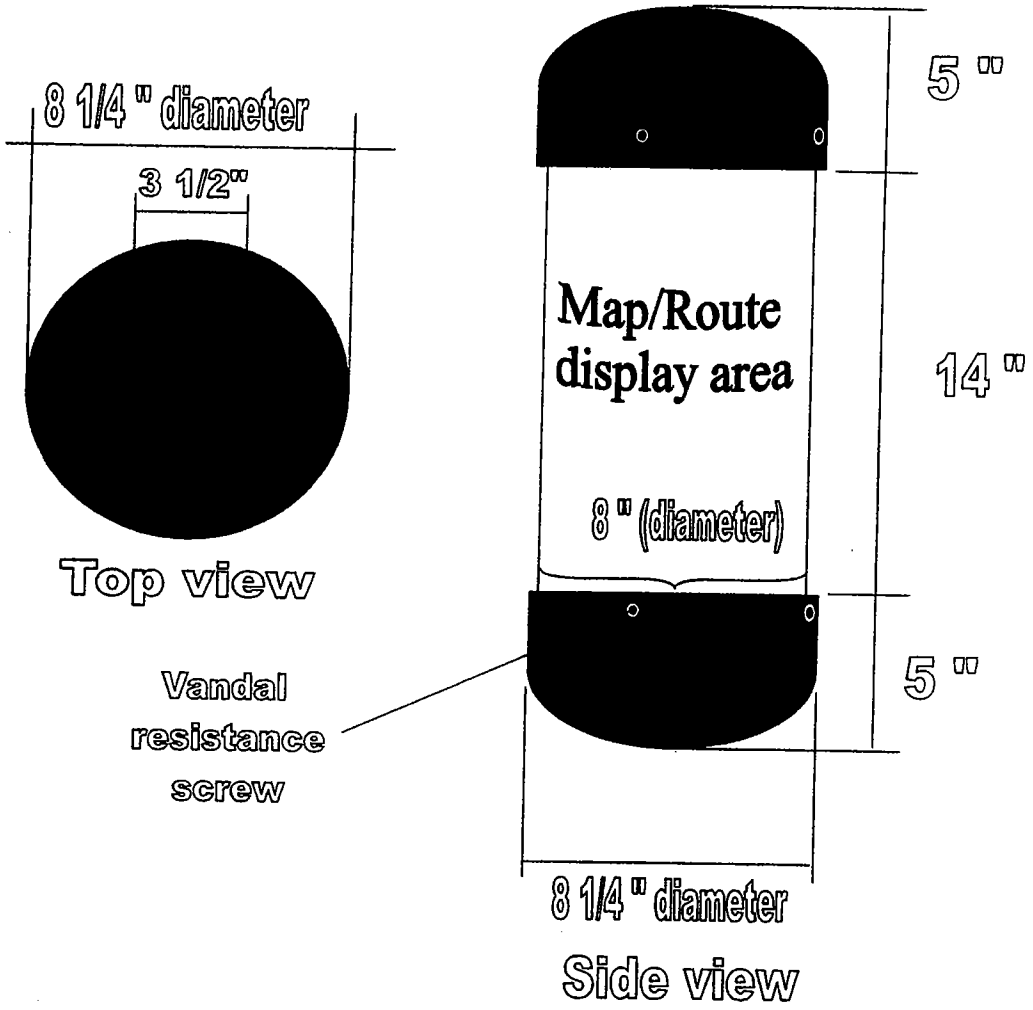

Foothill Transit Route Display Unit

DIMENSIONS ARE APPROXIMATE
(NOT TO SCALE)

DIAGRAM OF ROUTE/MAP CAROUSEL
DISPLAY UNIT FOR FOOTHILL TRANSIT (Type II)

EXHIBIT G.10

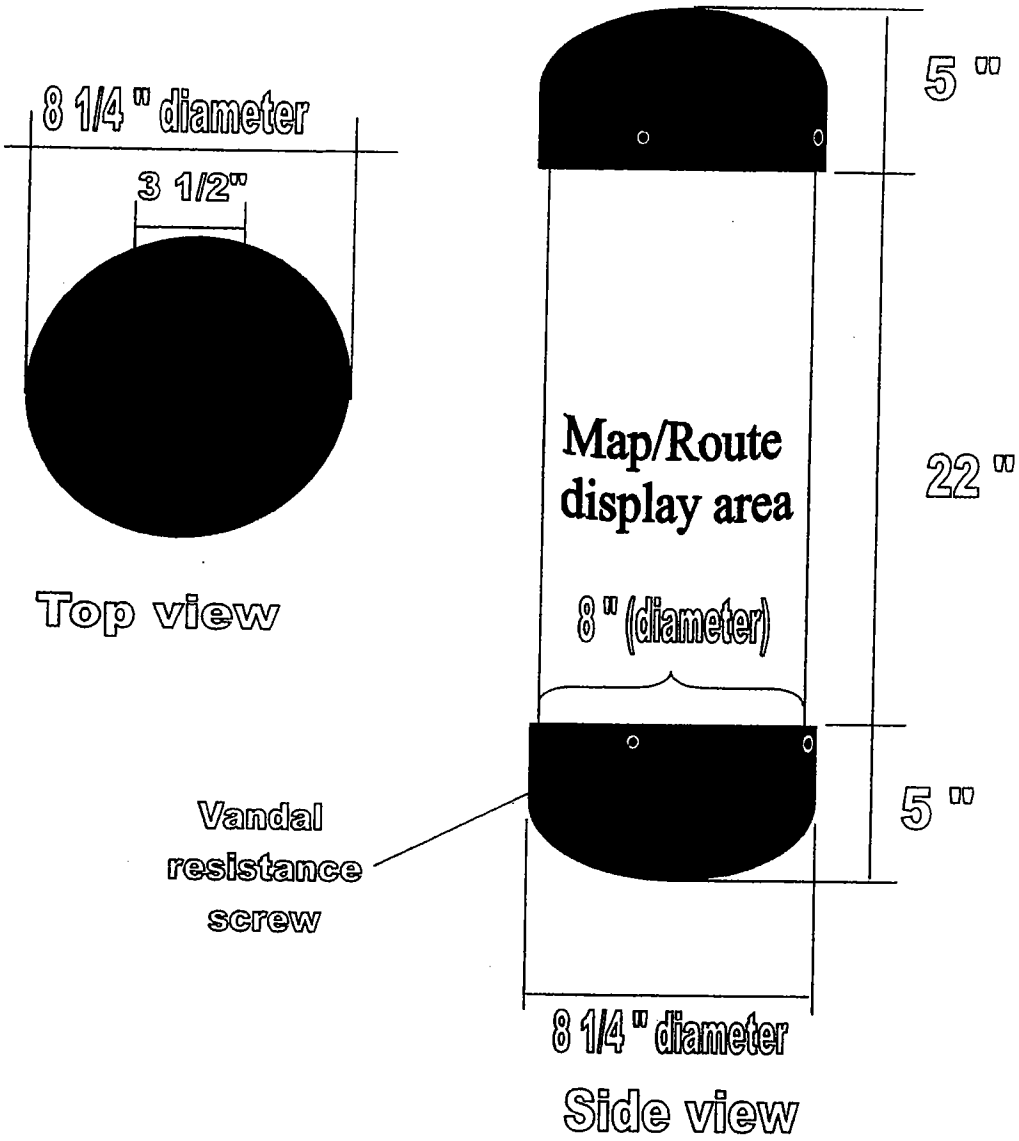

Foothill Transit
Route Display Unit

DIMENSIONS ARE APPROXIMATE
(NOT TO SCALE)

P:\aspub\CONTRACT\BEN\TRANSITSTOP NORTH & SOUTH\2008 SOUTH REBID\RFP\[18 EXHIBIT G drawings ver 2.xls]EXHIBIT G.11

05/21/20088:27 AM

DIAGRAM OF PLACEMENT OF SOLAR LIGHT POLES

EXHIBIT G.11

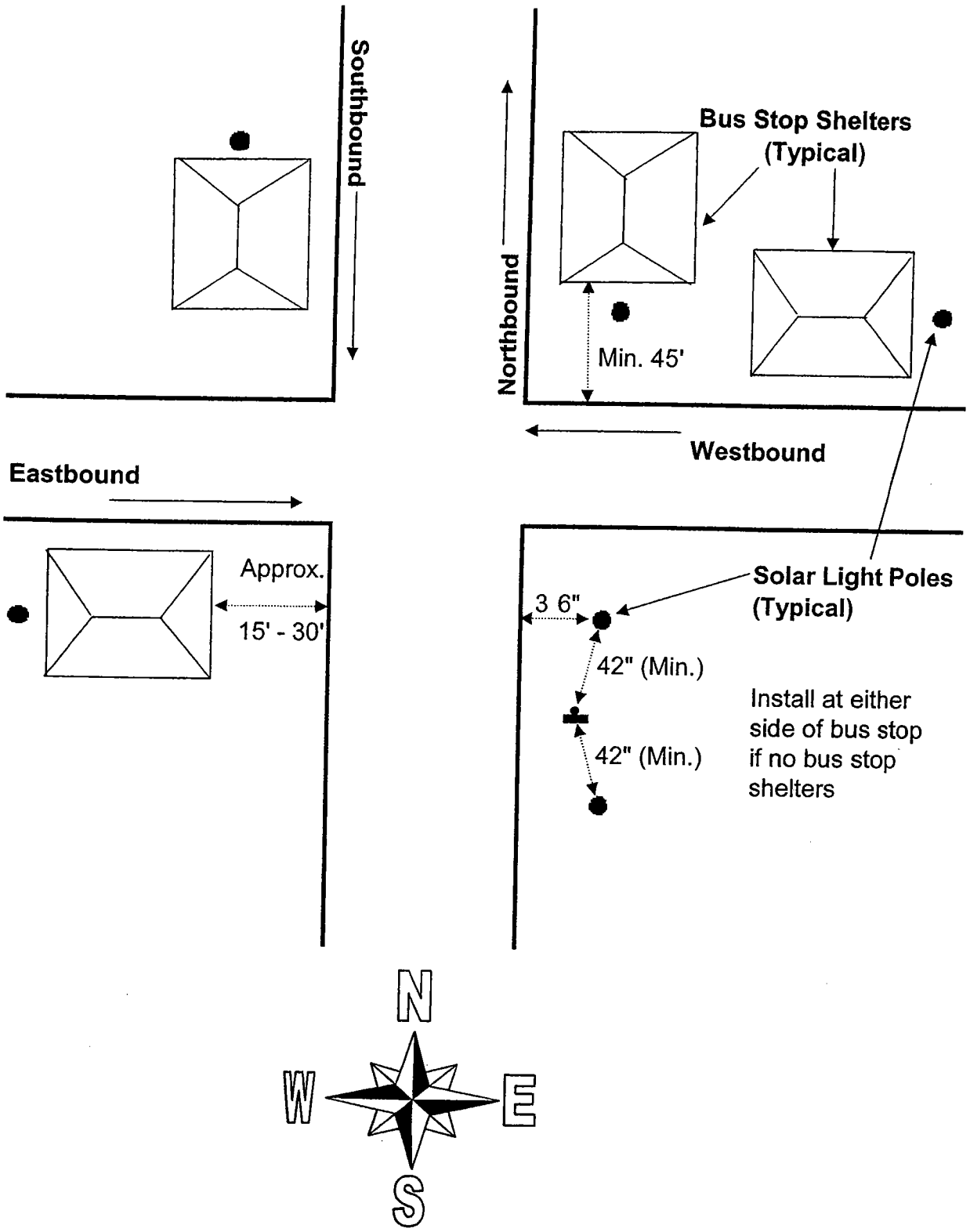

EXHIBIT H

PROPOSED COST FOR BUS STOP AMENITIES

Vendor's Signature:_____, Date _____ Contract Manager:_____, Date _____

Please enter proposed cost for the appropriate as needed service item. All costs are inclusive with times, materials, taxes, and other necessary charges incurred.

Bus Stop Location:_____

Approve ☐ Not approve ☐ Comments: _____

Parts / Services	Reinstall	Repair	Replace	Relocate	Remove	Notes
BUS SHELTER **Style and Model No.**_____						
Bus shelter unit*						
Shelter structure						
Solar panel						
PSA panel glass						
BUS BENCH **Style and Model No.**_____						
Bench unit						
TRASH RECEPTACLE **Style and Model No.**_____						
Receptacle unit						
Dome cover						
Frame						
Liner						
OTHERS: (please specify)						

* Bus shelter unit includes a shelter structure, a bus bench, a trash receptacle and the necessary power source to provide illumination for shelter and/or PSA panel.

Sample Fuel Adjustment Calculation: Fuel Purchased at Market Prices

Following sample data is required to calculate fuel adjustment:
Unit Rate from PW-2, Schedule of Prices: $15.00
Percentage of Unit Rate Attributable to Fuel Costs: 12% (from Agreement)
Proposal due date: November 2007
Contract start date: March 2008

Fuel Adjustment (FA) Component for Propane price:
Propane (On-Highway) - August 2007[1] 173.7 cents per Gallon
Propane (On-Highway) - December 2007[2] 218.7 cents per Gallon
Percent Change = [(December 2007 Price/Gallon – August 2007 Price/Gallon) / (August 2007 Price/Gallon] x (100)
[(218.7 - 173.7) / 173.7] x (100) = 25.9%
Percent Change in Propane price: 25.9% increase

Adjusted Unit Rate (FA Component):
= (12% of Unit rate x Percent Change in Propane Price)
= (12% x $15.00 x 25.9%)
= $0.47 Fuel Adjustment (increase)

Adjusted Unit Rate for March 2008
$15.00 + $0.47 = $15.47

Sample Fuel Adjustment Calculation: Fuel Purchased Under Long-Term Fuel Supply Agreement

Following sample data is required to calculate fuel adjustment:
Unit Rate from PW-2, Schedule of Prices: $15.00
Percentage of Unit Rate Attributable to Fuel Costs: 12% (from Agreement)
Proposal due date: November 2007 (Long-Term Fuel Price: $3.00 per gallon)
Contract start date: March 2008
Renegotiation of Fuel Price: May 2008 (renegotiated price is $3.25 per gallon)

Fuel Adjustment Component for Contract Price:
November 2007 $3.00 cents per gallon
Renegotiated Price in May 2008 $3.25 cents per gallon
[(May 2008 Price/Gallon – November 2007 Price/Gallon) / (November 2007 Price/Gallon)] x (100) = Percent Change
[($3.25 - $3.00) / $3.00] x (100) = 8.3%
Percent change in Diesel (long-term price) 8.3% increase

Adjusted Unit Rate (Fuel Adjustment Component):
= (12% of unit rate) x (Percent change in price)
= [(12%) x ($15.00)] x (8.3%)
= $0.15 Fuel Adjustment (increase)

Adjusted Unit Rate beginning May 2008
$15.00 + $0.15 = $15.15

---

1 Three months preceding the proposal due date.
2 Three months preceding the contract start date.

BOND FOR FAITHFUL PERFORMANCE

KNOW ALL MEN BY THESE PRESENTS:

That we, _____
(Contractor/Principal)

as principal, and _____
(Surety)

as surety, are held and firmly bound unto the LOS ANGELES COUNTY DEPARTMENT OF PUBLIC WORKS AND COUNTY OF LOS ANGELES, State of California (hereinafter County), in the sum of :

_____ Dollars ($ _____)

lawful money of the United States, for the payment of which sum, well and truly to be made, we bind ourselves, jointly and severally, firmly by these presents.

The condition of the above obligation is such that, whereas said principal has been awarded and is about to enter into a written contract with the County for the Street Sweeping in South Whittier and is required by said County to give this bond in connection with the execution of said contract:

NOW, THEREFORE, if said principal shall well and truly do and perform all of the covenants and obligations of said contract on its part to be done and performed at the times and in the manner specified therein, then this obligation shall be null and void, otherwise it shall be and remain in full force and effect. No premature payment by said County to said principal shall exonerate any surety unless the Board of Supervisors of said County shall have actual notice that such payment is premature at the time and it is ordered by said Board, and then only to the extent that such payment shall result in loss to such surety, but in no event more than the amount of such premature payment.

It is agreed that any alterations in the work to be done or increase or decrease of the material to be furnished, which may be made pursuant to the terms of said contract, shall not in any way release either the principal or surety hereunder, nor shall any extensions of the time granted under the provisions of said contract release either the principal or surety, and notice of such alterations or extensions of the contract is hereby waived by the surety, provided, however, that if any alterations are made which will alter the general character of the work, or which will increase the total amount to be paid to the contractor by more than twenty-five percent (25%), then written consent of the surety shall be first obtained.

WITNESS our hands this _____ day of _____ , 200 ____ .

By _____ (Contractor/Principal)	By _____ (Surety)
By _____ Its	By _____ Its Attorney-in-fact
By _____ Its	By _____ Its Attorney-in-fact
By _____ Its	By _____ Its

Transit Maintenance
ShelterCLEAN

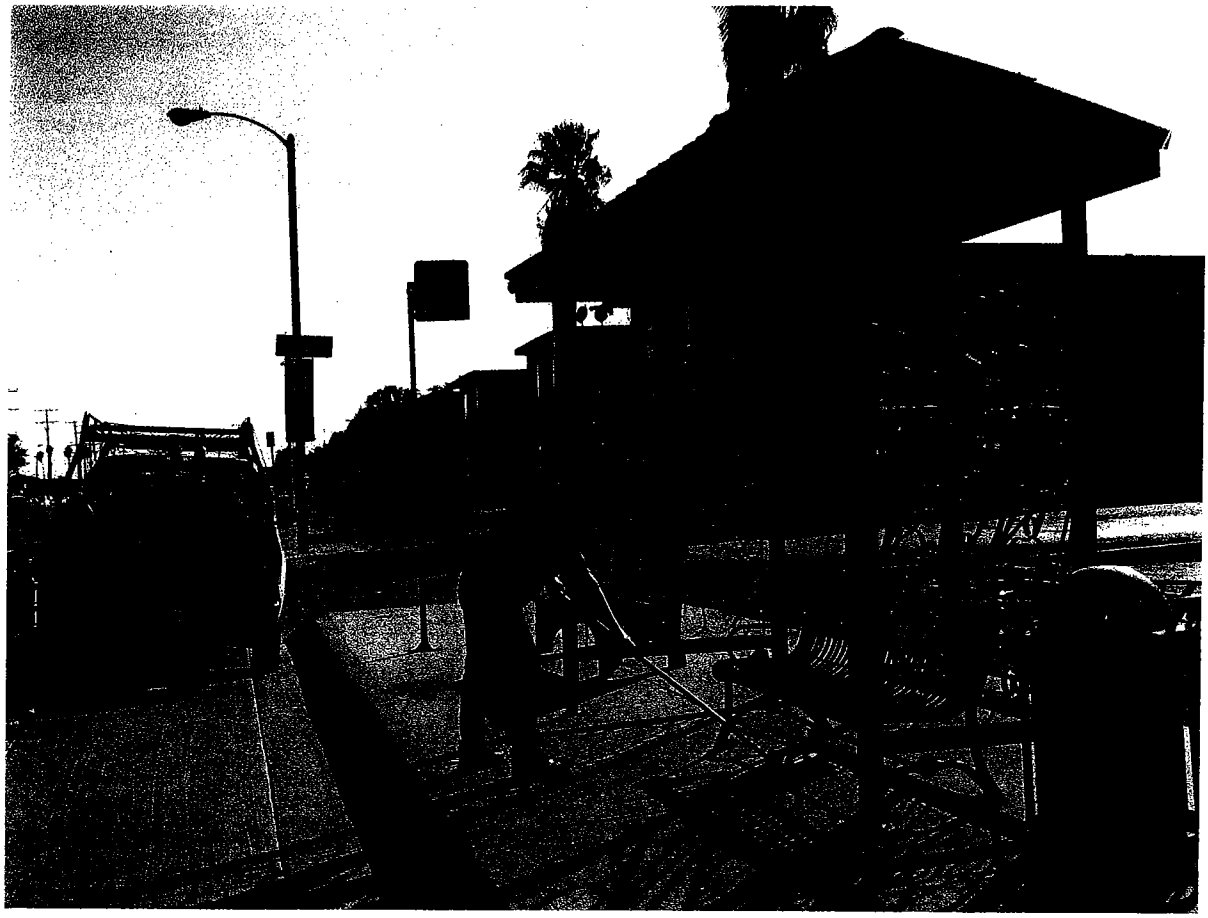

COUNTY OF LOS ANGELES DEPARTMENT OF PUBLIC WORKS

Maintenance Program For Non-Advertising Bus Stop Amenities-South County

RFP 2008-PA034

PROPOSAL

County of Los Angeles
Department of Public Works

COUNTY OF LOS ANGELES DEPARTMENT OF PUBLIC WORKS

Maintenance Program For

Non-Advertising Bus Stop Amenities

South County RFP 2007-PA034

July 9, 2008

CALIFORNIA OPERATIONS

ShelterCLEAN, Inc.
2514 North Naomi Street • Burbank, CA 91504-3235
Phone 818.846.1300 • Fax 818.846.3242

ShelterCLEAN, Inc.
2475 Lemon Avenue • Signal Hill, CA 90755
Phone 562.595.6166 • Fax 562.595.6196

ARIZONA OPERATIONS

ShelterCLEAN of Arizona, Inc.
3640 East Washington Street • Phoenix, AZ 85034
Phone 602.220.0687 • Fax 602.220.0689

NEW YORK CITY HEADQUARTERS

Shelter Express, Inc.
444 Merrick Road, Suite 370 • Lynbrook, NY 11563
Phone 516.881.3535 • Fax 516.887.2029

Table of Contents

TRANSMITTAL LETTER

SECTION A

Qualifications, Related Experience and References ____ 1
Project Management ____ 5
Labor Resources ____ 6
Work Performance ____ 7
Project Organization Chart ____ 7
Related Experience ____ 8
References ____ 9
Staff and Support Services/Résumés ____ 10

SECTION B

Work Plan ____ 21
Controls ____ 29
Financial Statements ____ 31
Licenses and Certifications ____ 32
Insurance ____ 33

SECTION C

Required Proposal Forms ____ 34

Transit Maintenance
ShelterCLEAN
2514 North Naomi Street, Burbank, CA 91504/818.846.1300/fax 818.846.3242/info@shelterclean.com

July 9, 2008

Mr. Benjamin Sandoval
Contract Manager
County of Los Angeles Department of Public Works
900 South Fremont Avenue
Alhambra, California 91803-1331

Re: RFP 2008-PA034 Maintenance Program For Non-Advertising Bus Stop Amenities

Dear Mr. Sandoval:

ShelterCLEAN, Inc., a subsidiary of Shelter Express, Inc. is pleased to present its proposal for bus stop maintenance and trash collections services. We have been honored and proud to have the opportunity to perform these services for the past five years for Los Angeles County. We are confident in our ability to continue the duties outlined in the scope of work and comply with all administrative functions related to the project.

For nearly three decades, ShelterCLEAN has been a leader in providing transit stop maintenance service programs. ShelterCLEAN manages and services over ten thousand bus stops in the Greater Los Angeles Metropolitan Region. These include over eight hundred mixed-amenities stops for Los Angeles County, and six thousand, five hundred stop system for Orange County Transportation Authority. ShelterCLEAN and its affiliates also install, clean, and manage over five thousand privately owned advertising bus stop shelters located throughout the metropolitan Los Angeles and New York City areas. Our Arizona operation maintains over three thousand mixed amenity bus stops in the Cities of Phoenix and Glendale. All of our transit stop projects include the collection and disposal of refuse.

During the term of our contract, ShelterCLEAN's operational and administrative staff has worked diligently to develop and implement numerous procedures and programs in order to perform the provisions of the contract in an efficient and comprehensive manner. We believe our efforts have been effective in providing Los Angeles County with a first class maintenance program for non-advertising bus stop amenities meeting your proposal requirements.

Our proposal shall remain valid for a period of 180 days from the date above. During this period of proposal evaluation, you may direct any questions regarding ShelterCLEAN, Inc. and the proposal to Mr. Alan Mudge, General Manager, at the address and telephone number above. For questions regarding Shelter Express, or other corporate issues please contact Mr. Stan Brettschneider, Vice President, 444 Merrick Road, Suite 370, Lynbrook, New York 11563, (516) 881-3545.

Very truly yours,

Jerome Cooper

Section

A

Qualifications, Related Experience and References

ShelterCLEAN, Inc. and Affiliates

The **ShelterCLEAN** team is ready to continue to provide support operations seamlessly for the County of Los Angeles Department of Public Works with comprehensive and quality-driven bus stop maintenance service. The **ShelterCLEAN** team consists of Shelter Express, Inc., its affiliates and subsidiaries, and includes many of this country's oldest and most responsible names in transit management and ancillary services. This proposal is presented by ShelterCLEAN, Inc., a subsidiary of Shelter Express, Inc.. ShelterCLEAN, Inc. is a domestic California corporation, headquartered in Burbank.

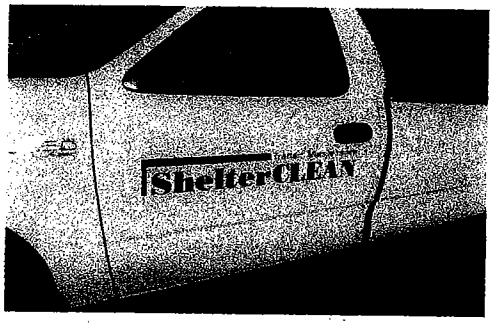

ShelterCLEAN, Inc. services 10,000 bus shelters and bus stops in Southern California with a fleet of sixty well-equipped, radio-dispatched trucks.

For over one hundred years, affiliates of **ShelterCLEAN** have managed transit services in some of the most difficult operating environments in the United States. Our complete team of operating employees, experienced supervisors, and seasoned professionals are committed to working in partnership with agency policymakers and contract managers to ensure that only the very best service is provided.

Trust in the contractor and the quality of the services it provides are the essential ingredients of a successful operation. **ShelterCLEAN** will provide the service that the County of Los Angeles Department of Public Works expects and deserves.

An industry leader since the beginning of modern transit service

While many companies that provide services to the transit industry struggle to claim a few years of experience, and only a few such companies have been in business for more than a decade, **ShelterCLEAN** pioneered support service programs for bus shelters in Southern California and has been the leader in bus stop maintenance over twenty-three years. Its East Coast affiliates have been providing transit related operational and maintenance services for decades.

Well-trained and enthusiastic employees are key to the successes achieved by ShelterCLEAN and its affiliates.

ShelterCLEAN has been a lead player in bus stops, shelters and related street furniture maintenance, repair, installation services and administration of programs. Our company is a part of the largest bus stop shelter cleaning and maintenance company in the country, and regularly cleans over five thousand shelters in New York City and Los Angeles, and over ten thousand mixed-amenities bus stops located throughout Southern California and in the cities of Glendale and Phoenix, Arizona.

Professional management with in-depth expertise and a proven track record

Municipal and Transit Agencies that have contracted with **ShelterCLEAN** include the County of Los Angeles Department of Public Works, City of Los Angeles Department of Transportation, Orange County Transportation Authority, and the Cities of Irwindale, Lake Forest, and Lancaster. **ShelterCLEAN of Arizona** in 2006

secured a multiyear contract with the city of Phoenix to service nearly three thousand bus stops and eleven passenger facilities and park and ride locations. Since then it has added trash collection and pressure washing services for the City of Glendale, Arizona. Our East Coast affiliates have held long-term agreements with the New York City Department of Transportation, MTA New York City Transit, the New York City Department of Education, school districts throughout Nassau and Westchester Counties, the New York City Human Resources Administration, and the University of New York.

Ability to provide services under virtually any condition

With our California headquarters in Burbank and a satellite facility in Signal Hill, we can respond in all of Los Angeles and Orange Counties within an hour and often within minutes. In short, **ShelterCLEAN** can efficiently provide service in virtually any environment; it already does.

Our crews are ready to respond and cover a large geographical area in Southern California.

Profile of the Company

ShelterCLEAN is experienced in all aspects of the manufacture, installation, maintenance, and refurbishing of street furniture, the maintenance of bus stops and transit centers, and the removal of graffiti; **ShelterCLEAN** is the second-largest outdoor and street furniture support service company in the country. In the year 2000 **ShelterCLEAN** was acquired by the G.T.J. Company, a New York based organization with over one hundred years experience in managing transit operations and providing ancillary services.

The G.T.J. Company also owns Shelter Express, the largest shelter cleaning and maintenance company in the country. Sharing the same facility with Shelter Express is MetroClean Express, a company primarily involved in the maintenance and protection of traffic during roadway construction projects.

ShelterCLEAN was incorporated as a domestic California corporation in 1989, though its' predecessor company was founded in 1978. The corporation employs ninety-six (96) people in southern California at two locations. Its main office is located in Burbank; an additional maintenance office is located in Signal Hill, where the Los Angeles County and OCTA operations are based. Our Arizona operation is based in Phoenix and staffs a management, administrative, and field crew of thirty-seven people. Eight other offices are maintained by the company's affiliates in New York City. The earliest of the New York City operations was incorporated in 1894. A list of the companies is shown in the table below (Table 1).

Table 1

Company	*Address(es)*	*Size of Facility*	*Year Founded*	*No. of Employees*
ShelterCLEAN Main Office & Maintenance Facility	2514 North Naomi Street Burbank, CA 91504-3235	20,000 ft²	1989	56
ShelterCLEAN Southern Area	2475 Lemon Avenue Signal Hill, CA 90755-3462	10,000 ft²		40
ShelterCLEAN Of Arizona	3640 East Washington Street Phoenix, AZ 85034	6,200 ft²	2006	37
Shelter Express MetroClean Express GumBusters N.Y.	53-01 Vernon Boulevard Long Island City, NY 11101	50,000 ft²	1987	110
GTJ REIT, Inc. Parent Corporation	444 Merrick Road, Suite 370 Lynbrook, NY 11563	6,300 ft²	1925	20
TFM Paratransit	626 Wortman Avenue Brooklyn, NY 11208-5439	479,785 ft²	1998	125

Project Management

ShelterCLEAN is proud that it has developed an employee benefits and incentive program that has enabled it to maintain a well-trained and long tenured staff and crew. This project will be based from our Signal Hill facility using our existing County of Los Angeles Department of Public Works staff.

1. Management Staff

Alan Mudge, General Manager, will continue to oversee the project ensuring contract compliance and assisting Pamela Garvin in invoice detail. Alan will coordinate project, procuring any additional equipment and vehicles to meet the service levels required by this proposal. He will maintain a vigilant eye on monitoring field procedures and performance and ensure that it follows the work plan we have outlined here in this proposal.

Rafael Mendez, Operations Manager, will continue to provide direct oversight and management of field crews and operations and be the primary conduit of information and communication between ShelterCLEAN and the County of Los Angeles Department of Public Works. Field supervisors report directly to Rafael.

Alfredo Perez is our current County of Los Angeles Department of Public Works Field Supervisor. He will continue to be responsible for inspecting and ensuring crew work quality and adherence to company policies and procedures. He will report directly to Rafael Mendez. He will also assist field crews when necessary to carry out the requirements of the project.

2. Operations Personnel

The County of Los Angeles Department of Public Works field crews will continue to include experienced route technicians, repair technicians, and pressure wash specialists. Upon awarding of the contract, our experienced crews will continue seamlessly without interruption or startup time needed. All specialists and technicians have been trained

per the specifications of the contract and as outlined in the labor-hour allocation chart and Cost Methodology and Staffing Chart (Form LW-8)

3. Administrative Staff

Pamela Garvin, Controller, will continue to provide monthly detailed invoicing and records to the County of Los Angeles Department of Public Works relying on and verifying the information supplied by Operations.

Claudia Soltero will be responsible for the management and oversight of database system in Signal Hill. Her primary functions will be fielding calls, radio dispatching and helping the operations manager with route and work order organization and distribution. Claudia will log in the necessary information needed for monthly invoicing and record keeping.

Myrna Mudge, Maintenance Operations Administrator, will provide support in all areas of the project including administrative functions, data management, personnel and field operations.

4. Corporate Executive Staff

Jerome Cooper, President and Stan Brettschneider, Vice President, will be available to support the local management and administrative staff with capital funding, large equipment acquisitions, and contract guidance and compliance.

Labor Resources

ShelterCLEAN estimates the following labor hours will be required to perform the maintenance service tasks required in this contract.

Task	Person-hours per week required for task completion
Amenities Maintenance/Trash Collection	280.0 hours
Pressure Washing-Six Week Cycles Avg. Per Week	18.0 hours
Solar Light Tests-Six Week Cycles Avg. Per Week	4.0 hours

Work Performance

The project manager and other key personnel are as follows:

Project Manager .....Alan Mudge

Operations Manager .....Rafael Mendez

Field Supervisor ..... Alfredo Perez

The management and professional back office support will be provided at no additional charge beyond the costs specified in the cost methodology (7. General & Administrative Costs). The key individuals providing this professional support are as follows:

Administrator .....Pamela Garvin

Project Administrator .....Claudia Soltero

Maintenance Operations Administrator.....Myrna Mudge

Project Organization Chart

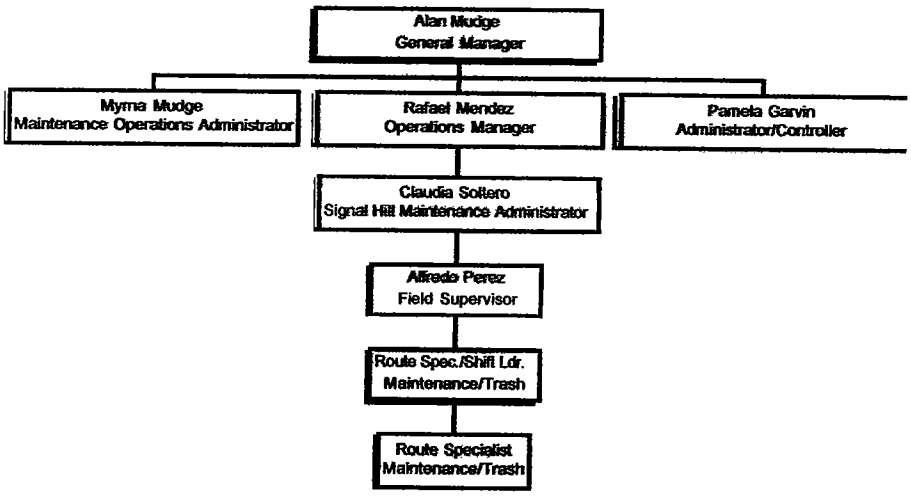

Related Experience

In April 2003, ShelterCLEAN was awarded a multi-year contract with the County of Los Angeles Department of Public Works to provide maintenance and repair services of nearly eight hundred bus stops in the south and north unincorporated areas of the county. The project is part of the County's compliance obligation with the National Pollutant Discharge Elimination System permit program. ShelterCLEAN was proud to be awarded another component to our service base this year by obtaining an additional contract with Los Angeles County Public Works, Road Maintenance Division, that requires twice daily, six day a week curbside trash collection in the Florence/Walnut and District Three service areas.

ShelterCLEAN is the bus stop maintenance contractor for the Orange County Transportation Authority for eleven years (1994–2002, 2003-present), maintaining approximately 6,500 bus stops. The company's crews perform monthly preventive maintenance cycles as well servicing approximately two thousand, five hundred trash "hot spots" every week.

ShelterCLEAN, Inc. is a licensed California state contractor (license number 805534, C61/D34/D42) to install transit shelters, street furniture and other types of prefabricated structures. Our D42 classification allows us to install non-electrical signs and posts. All the requirements of ShelterCLEAN's working agreements are in good standing and represent better than "satisfactory performance."

Under the present master agreement with CBS Outdoor and CBS/Decaux of Southern California, ShelterCLEAN is responsible for the assembly, installation, maintenance, repair, removal, refurbishing, and administration of over two thousand, two hundred bus stop shelters, public amenities kiosks (PAK), and newsstands. The company's service area stretches from the North Los Angeles County (Antelope Valley), to South Orange County, with most work centered in the Los Angeles basin. Daily trash collection is a critical part of our service for the street furniture programs.

References

Fredrick Wong, Supervising Engineer
Los Angeles County Department of Public Works,
900 South Fremont Avenue, Ninth Floor
Alhambra, CA 91802-1460
(626) 458-3907

Michael J. Hays, Senior Engineer
County of Los Angeles Department of Public Works
11282 South Garfield Avenue
Downey, CA 90242
(562) 869-1176

William Batory, Senior Technician Stops and Zones
Orange County Transportation Authority,
550 South Main Street, Fourth Floor,
Orange, CA 92613-1584
(714) 560-5912

Francois Nión, Managing Director
CBS/Decaux
1320 Newton Street
Los Angeles, CA 90021
(213) 608-0910

James Johnson, Transit Director
CBS Outdoor,
1731 Workman Street,
Los Angeles, CA 90031
(323) 276-7320

Carl Montgomery, Project Manager
City of Phoenix, Public Transit
302 North 1st Avenue
Phoenix, AZ 85003
(602) 534-2146

Staff and Support Services

Education and Experience

Education and experience are included in the résumés following.

Résumés

Résumés of all key personnel follow in alphabetical order

Stan Brettschneider

EXPERIENCE

For thirty-four years Stan Brettschneider has been involved in the field of transportation and is vice president of ShelterCLEAN and Shelter Express. He is also active as the vice president of MetroClean Express, Shelter Electric, and Transit Facility Management Corp. He has been a key executive of G.T.J. Company, Green Bus Lines, Command Bus Company, Satellite Parking Systems, and Varsity Transit. In his role as vice president of ShelterCLEAN and Shelter Express, Stan is responsible for overseeing and supervising the administrative, operational, and strategic planning activities of the companies. As a result, the scope of the services and programs that these two companies provide its customers has grown each year.

Stan has also been the vice president of the G.T.J. Company, with responsibilities for real estate asset management of more than $40 million of industrial and commercial real estate used by the G.T.J. Company group of companies. Stan has directed compliance with environmental regulations, analyzed and developed plans for highest and best use of properties no longer used for bus service and storage, and negotiated lease terms and conditions.

With Green Bus Lines, he directed overall policy and planning for a transit company operating a fleet of 227 transit buses at two privately-owned garage and maintenance facilities, fiscal planning, staff hiring and development, and budget adherence. Stan oversaw the company's compliance with all contractual obligations and relevant city, state, and federal laws and regulations.

At Command Bus Company, Stan directed policy and planning for a transit company operating a fleet of 125 transit buses. He directed fiscal planning, staff hiring and development, and budget adherence. Stan coordinated efforts with the City of New York to move into the Southeast Brooklyn Maintenance facility, a $28 million, state-of-the-art bus maintenance and storage facility. He oversaw one of the most innovative alternate fuel transit bus programs in the country with seventy-three new Orion V CNG-powered buses.

From initial conception to organization and development of operational systems, Stan founded the Satellite Parking Systems off-airport parking system for LaGuardia Airport. Proximity to the airport, along with car to airline transportation and responsive 24-hour service, made Satellite Parking the long-term parking option of choice at LaGuardia Airport. Stan also led one of the New York region's largest school bus companies, operating 511 school buses in school districts through the boroughs of Queens, Brooklyn, and the Bronx, and 124 school buses in Nassau County.

EDUCATION

New York University, New York, N.Y.

Bachelor of Arts, Economics (1972)

Jerome Cooper

EXPERIENCE

Over the past thirty-eight years Jerome Cooper has been active in the executive management of the G.T.J. Company and its many affiliates. As Chairman of the Board of these companies he has been responsible for leading the organization in becoming the premier outdoor maintenance and support services company in North America. Jerry has also led the organization in its operation of the largest privately-operated bus system in New York City (including a substantial paratransit component).

With a goal of diversifying the organization's services, ten years ago Jerry broadened the company's original focus on bus transportation so as to add ancillary transportation services. At that time he negotiated the acquisition of Shelter Express, a leading bus stop shelter installation and maintenance company based in New York City, and MetroClean Express. These companies provide street furniture installation and maintenance, as well as the maintenance and protection of traffic during construction projects.

Jerry looked to expand the business in other parts of the United States. He found such an opportunity with ShelterCLEAN. This acquisition created a bridge for high quality outdoor furniture support services from New York to California, Arizona, and other western states.

For the past seven years Jerry has been president of Transit Facility Management Corp., the company's provider of paratransit services.

From 1994 when Jerry was appointed president of Jamaica Buses, he instituted several programs which reduced costs and increased operating efficiency. Through an aggressive preventive maintenance program and more effective supervision of transportation which improved on time performance record he achieved his goals. He coordinated an outreach program to local community groups to improve communication of the company's efforts to address problems related to bus transit. Jerry was the executive vice president of Green Bus Lines for nearly twenty years. He was involved in the negotiation of collective bargaining agreements, as well as the

union/management problems relating to workers' performance and discipline. He participated in financial planning incident to operations.

As director of risk management and claims disposition for Green Bus Lines, he was responsible for the analysis, development and execution of safety programs as well as the preparation, submission and reports in response to the rules, regulations and investigations of the New York State Department of Transportation. This work entailed knowledge of the fundamentals and function of bus components. In this connection, over the years he has participated in industry association conferences and seminars.

EDUCATION

Fordham University, New York, N.Y., Bachelor of Laws,

Ohio State University, Bachelor of Arts

Certifications and Licenses

Admitted to the bar in New York (1953) and Florida (1962)

Pamela Garvin

EXPERIENCE

Since 1988 Pamela Garvin has been with ShelterCLEAN, both as the company's office administrator and, for the past five years, the company's controller. She has extensive knowledge of accounting, payroll, and human resources. Pamela possesses multi-state experience in a corporate environment and strong practical experience in the development, implementation and maintenance of client records, employee files, government compliance reports and communications.

Her primary responsibilities include the set-up and management of accounting, payroll and human resource offices. Accounting responsibilities include accounts payable, accounts receivable, invoicing, all bank records and reconciliations, insurance records and files, communications with all related private and government entities and purchasing. Payroll experience includes all aspects from computation of time for weekly pay period to W-2 forms generation. She completes all tax filings, IRS and States inquiries from investigation to resolution, compliance and reporting for all child support obligations, living wage laws, and all other payroll related inquiries and demands.

EDUCATION

Glendale Community College, Glendale, Calif.

Associate of Arts (2000)

HONORS

Permanent Member of Alpha Gamma Sigma, State of California Honor Society

Rafael Mendez

EXPERIENCE

Rafael Mendez has been with ShelterCLEAN since 1991, and has worked both as a route maintenance and repair specialist as well as managing the company's operations throughout Southern California. He has extensive knowledge of the bus stop zone technical procedures and applications utilized by the County of Los Angeles Department of Public Works and Orange County Transportation Authority ("OCTA") and is a training specialist experienced in procedure and company policy.

Training new or transferring employees in the County of Los Angeles Department of Public Works project is one of his major functions, along with field and shop supervision of crews. He has been instrumental in the development and implementation of policies and procedures for the County of Los Angeles Department of Public Works and OCTA projects. His current duties include overseeing the Los Angeles County and OCTA projects that includes managing personnel, work scheduling and assignments, field supervision, and recruiting.

Before his promotion to his supervisory and managerial positions, Rafael worked three years performing maintenance cleaning and installing advertising posters in bus stop shelters in Orange County. Almost immediately he began learning shelter repairs including basic electrical problems, glass replacement, and installation procedures.

EDUCATION

Fullerton College, Fullerton, Calif.

1990-91

Alan Mudge

EXPERIENCE

Alan Mudge has over twenty-eight years experience in the maintenance and repair of transit facilities and street furniture. He oversees all Southern California operations, is responsible for managing the operating workforce, and develops all maintenance procedures and quality assurance programs. Alan is directly involved in all new business, from conception to start-up, and continuing through each contract.

Alan began as an entry-level route cleaner, moving through each level of the ranks to his current position as general manager. He has been instrumental in the creation, development, and implementation of maintenance, repair, and production procedures and methods relating to every aspect of transit shelter and street furniture operations.

Alan is the principal for all contracts in Southern California. He designed and implemented the work program for the Orange County Transportation Authority bus stop maintenance project, the transit centers projects, and the Los Angeles County bus stop maintenance program. He works directly with all clients to continually update and improve existing procedures, always striving for better service and quality.

EDUCATION

Glendale Community College, Glendale, Calif.
Business Administration (1988, 1997-99)

CERTIFICATIONS AND LICENSES

Qualified ShelterCLEAN, Inc. for its Contractors State License in 2002.

Myrna Mudge

EXPERIENCE

Myrna has been with ShelterCLEAN over twenty-one years starting in 1987 as the Data Entry Assistant. Although she had no experience with computers or database systems, she quickly learned and mastered the applications. She quickly advanced to Maintenance Operations Assistant Administrator and to her current position as Operations Administrator and Director of Recruitment.

Her primary responsibilities are overseeing and managing all aspects of the database, records, and all administrative functions related to maintenance operations. Myrna also supervises two assistants in two offices and helps the General Manager and Supervisory Staff with personnel issues, language translation, interview and recruiting functions. She is the primary channel of communication between our Clients relating to work orders, posting, and other record-related issues.

Myrna is highly detailed and organized, maintaining a database system with hundreds of thousands of records. She directly manages the database records for all clients and will provide oversight support for the OCTA file that will be based from our Signal Hill Facility.

EDUCATION

General Education-Glendale Community College, 1988-1989

Alfredo Perez

EXPERIENCE

Alfredo Perez has been with ShelterCLEAN since July 2003, and has worked both as a route maintenance and repair specialist. He began as a route specialist for our County of Los Angeles Department of Public Works project quickly advancing to his current position as Field Supervisor. He has extensive knowledge of the bus stop zone technical procedures and applications utilized by the County of Los Angeles Department of Public Works and Orange County Transportation Authority ("OCTA") and is a training specialist experienced in procedure and company policy.

For the past four years Alfredo's primary responsibilities included performing fieldwork for the County of Los Angeles Department of Public Works bus stop project, including making repairs, performing preventative maintenance, and taking care of emergencies when necessary. Training new or transferring employees is another of his major functions, along with field and shop supervision of crews.

EDUCATION

Los Angeles Trade Technical School, 1995-Present.

Claudia Soltero

EXPERIENCE

Claudia has been with ShelterCLEAN since 2003 and came aboard as our Maintenance Operations Administrative Assistant for specifically for the County of Los Angeles Department of Public Works and the Southern Area Operations. She has proven to be a quick learner, especially in using the computer databases for our OCTA and Los Angeles County projects.

Her primary responsibilities are analyzing reports from field crews, disseminating the data, and entering it into our database system to create work orders and maintain a historical record for every location and the work that is performed. Claudia assists the Operations Manager with personnel issues and radio dispatching responsibilities. She also fields the many telephone calls, fax, and email requests that come in daily.

Claudia is highly detail oriented and organized, maintaining a database system with thousands of records. She will be instrumental in the steam-cleaning program keeping the records organized and coherent for quick and efficient invoicing and review.

EDUCATION

General Education-Glendale Community College, 1992-1994
Surgical Technician Certification, Concorde Career College,
1993-1994

Section

B

Work Plan

Overview

ShelterCLEAN will continue performing the specific tasks of the project, providing the dedicated and experienced crews needed so that every situation can be covered quickly without disruption in service.

A Team of experienced Route Specialists will continue to perform the weekly amenities maintenance and refuse collection on established routes, fine-tuned over the past five years to provide the most efficient service. Along with these crews, our other County contract crews will be able to assist and complete the job in the event problems arise at no additional cost to the client.

Along with our regular staff of County of Los Angeles Department of Public Works Crews, we have the resources of an entire company that has the qualifications and experience to perform the functions in the Los Angeles County project. Our current service with County of Los Angeles Department of Public Works allows us the experience and knowledge to continue this project seamlessly without any startup or disruption in service.

Training

The Operations Manager, with assistance from the Field Supervisors, is responsible for the training of new employees and the review of existing and new procedures for current crewmembers. The Field Supervisors and other qualified employees will be assigned training duties under the direction of the Operations Manager. The Operations Manager will follow up, review and conduct onsite inspections of work before new employees go on their own.

On-the-job training will be the primary mechanism for introducing new employees to their roles and responsibilities in the performance of this contract ShelterCLEAN also provides its operational staff with manuals, handouts, and in house training meetings. Employees aree trained with an emphasis on vehicle, personal, and public safety along with a focus on quality.

New employees will work with a qualified trainer for at least two weeks before going solo. The trainer will act as a mentor for the remainder of probation (90 days) and thereafter until management and the new employee are confident.

Activities

Amenities Inspection, Maintenance, & Trash Collection

A. Personnel, Vehicles, and Equipment

1. Personnel

- Full-time personnel currently assigned to the County of Los Angeles Department of Public Works project will continue seamlessly to carry out the requirements of the contract and the scope of work. All personnel will be full-time, whether working directly on this project the entire shift or splitting their time between our other projects.
- Dedicated Route Specialists (RS) on 6:00 A.M.- 2:30 P.M., Monday through Friday schedules.. Route Specialists will stay off high travel and gridlock zoned streets during peak hours specified by the Department. Each technician will be assigned an equipped vehicle as described below in item 2.

- Routes have an average of sixty stops with mixed amenities. This gives the crews ample time to complete all required tasks.
- Though amenity maintenance is only required once a week, the fact that crews will collect trash at most stops three days a week gives us redundant coverage, especially to correct any hazardous situations. It also affords the Department more service for its' money and reducing maintenance costs due to the frequency of visits.

- All personnel will wear the official ShelterCLEAN uniform and identification badge while on duty.

2. Vehicles

- All Route Specialist vehicles will be Ford F150 (or equivalent) trucks equipped with bed liners, bed height extenders, bed tarps or webbing, an arrow light stick, and two-way radio.
- All vehicles will be equipped with all tools necessary to perform the work described in the Scope of Work (SOW).
- All vehicles will be clearly marked with the ShelterCLEAN name, and telephone number.

B. Route Scheduling

- The operations manager will assign routes daily according to a prearranged schedule.
- Each Route Specialist will be assigned at least one route per day. The Route Specialist will be expected to complete the route, in a regular eight-hour shift but will be given authorization to work over to accommodate work delays or extraordinary problems found.
- Absenteeism and vacations will be handled with additional staff or overtime during the week at no additional cost to the County of Los Angeles Department of Public Works.

C. Work Method

- Each Route Specialist will receive the route sheet at the start of shift. The Specialist's vehicle will be stocked with supplies, and a set of tools necessary to complete the required service and some minor repairs.
- Each Route Specialist will be expected to inspect every location listed on the route and perform the necessary service as specified in the RFP scope of work, correct any problems and report deficiencies and damage that cannot be fixed that visit. Any public safety hazard will be corrected or made safe. Site will not be left until safe. Damaged trash receptacles, street furniture, or shelters will be delineated with barrier tape and/or cones until removed or repaired. Emergency hazardous situations will be called in via two-way radio or telephone when necessary.
- The Route Specialist will park off street whenever possible to service a stop. If it is necessary to park in the street curbside at the stop, the Route Specialist will use caution using arrow light stick to warn traffic. Once stopped, a delineator will be placed behind the vehicle approximately six (6) feet behind to alert drivers. If the Route Specialist's vehicle will severely disrupt traffic flow and/or block a traffic flow lane, alternate parking will be found even if it is not adjacent to the bus stop.
- Once positioned safely, the Route Specialist will perform the required maintenance specified in the SOW.
- The trash bags will be pulled from receptacle and placed in the truck. Any loose trash remaining at the bottom of receptacle/liner will be removed before a new bag is placed. The trash receptacle cover will be wiped cleaned
- The Route Specialist will pick up trash around the receptacle within a five-foot perimeter.

- Minor graffiti will be removed from shelters, benches, and trash receptacles using approved chemicals that are field proven, safe, and as environmentally friendly as possible. Extensive graffiti on the structures and sidewalk will be removed with a special work order and pressure washing if necessary. Severely blemished paint will be touched up with matched paint.

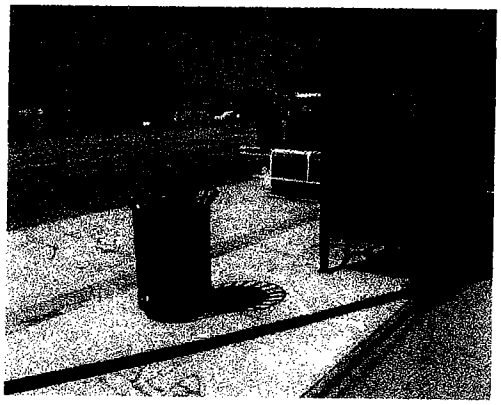

- The shelters and benches will be hand wiped clean as necessary, and glass or acrylic washed if so equipped.
- The Route Specialist will record on the route sheet any problems corrected as well as those that need follow up later.
- The Route Specialist will dispose of any trash and debris at the approved Materials Recycling Facility (MRF) disposal station.
- The route sheet and any work orders, complete or incomplete, will be turned in daily to the office for analysis and processing.

Pressure Washing

A. Personnel and Vehicles

1. Personnel

- Pressure Wash Operators will be assigned equipped vehicles as described below in item 2.
- Our Pressure Wash Operators are full time employees but their time is allocated between different contracts. The time apportioned to this project during the six-week cycles specified is averaged in weekly hours as shown on the Cost Methodology charts for the North and South County.

2. Vehicles

- The pressure wash operator vehicles will be Ford 350 (or equivalent) trucks with flatbeds, equipped with an arrow light stick, two-way radio, 3000 psi hot/cold/steam, gas powered pressure washer, 525-gallon water tank, and 100-foot hose and reel. Additionally, a wastewater vacuum system with a 125-gallon recovery tank will be mounted to aid in the reclamation of standing water or prevent runoff into the storm water system. Any wastewater collected will be disposed in accordance with local, state, and federal regulations. ShelterCLEAN has a permitted sanitary sewer at our Signal Hill facility.

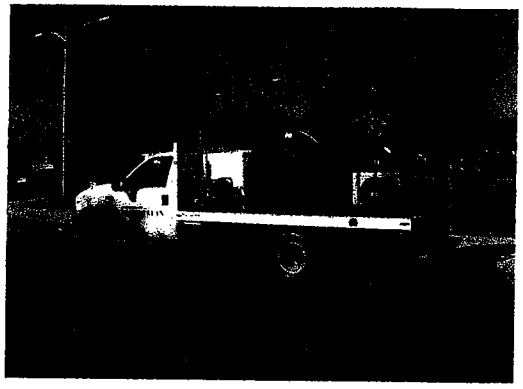

- All vehicles will be equipped with all tools necessary to perform the work described in the scope of work.
- All vehicles will be clearly marked with the ShelterCLEAN name, address, and telephone number as specified.

B Scheduling Six-Week Cycles

- The bus shelter locations in the North and South County will be pressure washed at six-week cycles. The schedule will be sent to the Department one week before the start of each cycle.
- We have estimated that all locations will be completed in approximately three and a half weeks. The time allocated allows for proper and thorough cleaning with wastewater runoff prevention when necessary and required.

- A portable boom system is used to divert runoff to the vacuum suction device so as to prevent wastewater from entering storm drains.
- Each pressure wash operator will be assigned fifteen to twenty five locations per shift. The pressure wash operator is expected to complete his/her assignments in a regular shift but will be given authorization to work overtime to accommodate work delays or extraordinary problems found.

C. Work Method

- Pressure wash operators will receive the assignment at the start of shift. The pressure wash operator's vehicle will be stocked with supplies, and a set of tools necessary to complete the required service and some minor repairs.
- The pressure wash operator will be expected to service every location listed on the route and perform the necessary maintenance as specified in the City's scope of work, correct any problems and report deficiencies and damage that cannot be fixed that visit. Broken signposts, protruding anchors and bolts, or any other public safety hazard will be corrected or made safe. The pressure wash operator will park off street whenever possible to service a stop. If it is necessary to park in the street curbside at the stop, the pressure wash operator will use caution by utilizing an arrow light stick to warn traffic. Once stopped, a delineator will be placed approximately six feet behind the vehicle to alert drivers. If the vehicle will severely disrupt traffic flow and/or block a traffic flow lane, alternate nonadjacent parking will be used.

- Once positioned safely, the pressure wash operator will perform the required maintenance specified in the scope of work.

- The pressure wash operator will record on the route sheet any problems corrected as well as those that need follow up later.
- The route sheet and any work orders, complete or incomplete, will be turned in daily to the office for analysis and processing.

Solar Light Checks

A. Personnel and Vehicles

1. Personnel

- Our Route Specialist/Repair Tech/Shift Leaders will all conduct the solar lighting system checks as specified. The inspections will be conducted during the regular shift by using the test button and/or by conducting nighttime inspections.

B Scheduling Bi-Monthly Inspections

- Using the maintenance route sheets, solar lighting system inspections will be scheduled at the beginning of every month staggering the checks so that every solar light is tested every other month (ie: half the plant checked one month while the other half the next month)

C. Work Method

- The inspection reports will be returned for analysis. Inoperable solar lights will be assigned a work order for Department approval and/or to comply with contract requirements for repair.
- Repairs will be assigned to staff designated as Repair Techs, trained in solar component replacement and operation.

Additional Repairs and Service

ShelterCLEAN is experienced in all facets of bus stop street furniture repair and maintenance. We will use experienced staff and crew to perform all the repairs and replacement functions specified in the RFP, and that we have been doing for the past five years for Los Angeles County.

Controls

Field Supervision

A field supervisor will devote the majority of their time to inspecting and evaluating the performance all field crews. This will entail driving the assigned routes of personnel and grading individual tasks with an evaluation form. The field supervisor reports directly to the operations manager.

The field supervisor will assist the operations manager in training functions and the implementation of procedures and policies. The field supervisor will be fully trained and qualified in all duties of the County of Los Angeles Department of Public Works operations should they be needed to perform special projects, service changes, vacationing and absent employees.

Vehicle and Job Safety

All employees will obey all applicable traffic laws and make every effort to work off street when the flow of traffic is a concern.

ShelterCLEAN participates the Department of Motor Vehicles "Pull Notice Program," which alerts us when an employee receives citations or has activity on his or her motor vehicle report. Employees are subject to disciplinary action up to and including discharge for any traffic violation or accident.

Employees are subject to disciplinary action up to and including discharge for unsafe work practices that lead to injuries or narrow escapes to themselves, co-workers, or the public.

Employees are expected to use the arrow light stick warning device, strobe light and/or other warning tools (delineators, cones, etc.) where prudent to warn other drivers of intent to stop and work in the bus stop zone.

Employees are expected to know and follow the safety procedures set forth in the ShelterCLEAN safety policy handbook (included with this proposal) as well as those established by California and federal regulatory agencies.

Records Control

ShelterCLEAN has developed a database that has complete information on all the locations, creates and stores all work orders and reports:

- All locations with pertinent information;
- Work order summaries generated monthly for billing; and
- Database researched for past work order activity.
- Reports can be exported into Excel spreadsheets to send to the Client

ShelterCLEAN's information system combined with the radio-dispatched crew allows us to track a problem immediately and respond quickly.

Information will be taken from completed work orders and recorded into our database creating a virtual work order for billing summaries and historical data.

Monthly Billing

A summary of activities along with an itemized list of completed work orders will be sent with monthly invoices. Invoices shall be expeditiously sent out at the closing of every month and the County of Los Angeles Department of Public Works will remit payment within thirty calendar days of the receipt and approval of invoice.

Subcontractors

ShelterCLEAN will perform all work for this maintenance project and not use subcontractors.

Financial Statements & Bid Bond

The required financial documents and bid bond of ShelterCLEAN, Inc. follow.

Bond Safeguard INSURANCE COMPANY

1 91 9 S. Highland Avenue, Bldg. A-Suite 300
Lombard, Illinois 60148-4979

Bond No. MC-0714

BID BOND
AIA Document No. A310 (February, 1970 Edition)

KNOW ALL MEN BY THESE PRESENTS, that we ShelterCLEAN, INC.

as Principal, and Bond Safeguard Insurance Company, Lombard, Illinois 60148, a corporation duly organized under the laws of the State of Illinois as Surety, are held and firmly bound unto
LOS ANGELES COUNTY DEPARTMENT OF PUBLIC WORKS
as Obligee, in the sum of

Dollars TEN PERCENT (10 %) OF AMOUNT BID ($ _____),
for the payment of which sum well and truly to be made, the said Principal and the said Surety, bind ourselves, our heirs, executors, administrators, successors and assigns, jointly and severally, firmly by these presents.

WHEREAS, the Principal has submitted a bid for **BUS STOP & AMENITIES MAINTENANCE, REPAIR, INSTALLATION, AND TRASH COLLECTION AT APPROX 551 STOPS THROUGHOUT UNINCORPORATED SOUTH LOS ANGELES COUNTY**

NOW, THEREFORE, if the Obligee shall accept the bid of the Principal and the Principal shall enter into a Contract with the Obligee in accordance with the terms of such bid, and give such bond or bonds as may be specified in the bidding or Contract Documents with good and sufficient surety for the faithful performance of such Contract and for the prompt payment of labor and material furnished in the prosecution thereof, or in the event of the failure of the Principal to enter such Contract and give such bond or bonds, if the Principal shall pay to the Obligee the difference not to exceed the penalty thereof between the amount specified in said bid and such larger amount for which the Obligee may in good faith contract with another party to perform the Work covered by said bid, then this obligation shall be null and void, otherwise to remain in full force and effect.

Signed and sealed this 9TH. day of JULY 20 08

(SEAL)

ShelterCLEAN, INC.
(Principal)

_____
(Title)

(SEAL)

Bond Safeguard Insurance Company
(Surety)

DEBRA J. EZRA Attorney- In- Fact

Bond Safeguard INSURANCE COMPANY

1 91 9 S. Highland Avenue, Bldg. A-Suite 300
Lombard, Illinois 60148-4979

STATEMENT OF SURETY'S INTENT

BOND SAFEGUARD INSURANCE COMPANY, a corporation organized and existing under the Laws of the State of **ILLINOIS** and licensed to do business in the State of CA hereby consents and agrees that if the contract for

_____ be awarded to

ShelterCLEAN, INC. the undersigned Corporation agrees with the said LOS ANGELES COUNTY DEPARTMENT OF PUBLIC WORKS to exercise the final bond as required by the specifications and to become surety in the full amount of the contract price for the faithful performance of the contract.

BIDS FOR WHICH WILL BE RECEIVED ON JULY 9, 2008

IN WITNESS WHEREOF, the undersigned Corporation has caused this agreement to be signed by its duly authorized representative and its Corporate Seal to be hereto affixed this 9TH. day of JULY, 2008

THE CONTRACT PRICE SHALL NOT EXCEED $ AMOUNT BID.

BOND SAFEGUARD INSURANCE CO.

DEBRA J. EZRA Attorney- In-F act

AO

POWER OF ATTORNEY

Bond Safeguard INSURANCE COMPANY

KNOW ALL MEN BY THESE PRESENTS, that **BOND SAFEGUARD INSURANCE COMPANY**, an Illinois Corporation with its principal office in Lombard, Illinois, does hereby constitute and appoint: Debra J. Ezra, Keith B. Adams, Robert G. Lull, ****** Bradley W. Post, Shawn K.Young **********

its true and lawful Attorney(s)-In-Fact to make, execute, seal and deliver for, and on its behalf as surely, any and all bonds, undertakings or other writings obligatory in nature of a bond.

This authority is made under and by the authority of a resolution which was passed by the Board of Directors of **BOND SAFEGUARD INSURANCE COMPANY** on the 7th day of November, 2001 as follows:

Resolved, that the President of the Company is hereby authorized to appoint and empower any representative of the Company or other person or persons as Attorney-In-Fact to execute on behalf of the Company any bonds, undertakings, policies, contracts of indemnity or other writings obligatory in nature of a bond not to exceed $1,000,000.00, One Million Dollars, which the Company might execute through its duly elected officers, and affix the seal of the Company thereto. Any said execution of such documents by an Attorney-In-Fact shall be as binding upon the Company as if they had been duly executed and acknowledged by the regularly elected officers of the Company. Any Attorney-In-Fact, so appointed, may be removed for good cause and the authority so granted may be revoked as specified in the Power of Attorney.

Resolved, that the signature of the President and the seal of the Company may be affixed by facsimile on any power of attorney granted, and the signature of the Vice President, and the seal of the Company may be affixed by facsimile to any certificate of any such power and any such power or certificate bearing such facsimile signature and seal shall be valid and binding on the Company. Any such power so executed and sealed and certificate so executed and sealed shall, with respect to any bond or undertaking to which it is attached, continue to be valid and binding on the Company.

IN WITNESS THEREOF, **BOND SAFEGUARD INSURANCE COMPANY** has caused this instrument to be signed by its President, and its Corporate seal to be affixed this 7th day of November, 2001.

BOND SAFEGUARD INSURANCE COMPANY
AN ILLINOIS INSURANCE COMPANY

BOND SAFEGUARD INSURANCE COMPANY

BY _____
David E. Campbell
President

ACKNOWLEDGEMENT

On this 7th day of November, 2001, before me, personally came David E. Campbell to me known, who being duly sworn, did depose and say that he is the President of **BOND SAFEGUARD INSURANCE COMPANY**, the corporation described in and which executed the above instrument; that he executed said instrument on behalf of the corporation by authority of his office under the By-laws of said corporation.

"OFFICIAL SEAL"
MAUREEN K. AYE
Notary Public, State of Illinois
My Commission Expires 09/21/09

_____
Maureen K. Aye
Notary Public

CERTIFICATE

I, the undersigned, Secretary of **BOND SAFEGUARD INSURANCE COMPANY**, An Illinois Insurance Company, DO HEREBY CERTIFY that the original Power of Attorney of which the foregoing is a true and correct copy, is in full force and effect and has not been revoked and the resolutions as set forth are now in force.

Signed and Sealed at Lombard, Illinois this 9th Day of July, 20 08

BOND SAFEGUARD INSURANCE COMPANY
AN ILLINOIS INSURANCE COMPANY

_____
Donald D. Buchanan
Secretary

BOND SAFEGUARD INSURANCE COMPANY
FINANCIAL STATEMENTS
AS OF DECEMBER 31, 2007

ASSETS	
Bonds	$17,333,099
Money Market &/or Stocks	0
Cash and Short-Term Investments	17,884,106
Agents Balances &/or Uncollected Premiums	5,124,433
Investment Income Due & Accrued	846,275
Funds Held or Deposited with Reinsurance Companies	0
Receivable from Parent, Subsidiaries and Affiliates	0
Reinsurance Recoverable on Loss Payments	52,853
Other Assets	2,421,001
Total Assets	$43,661,767

LIABILITIES	
Reserve for Losses and Loss Expense	$5,393,803
Reserve for Unearned Premiums	16,846,535
Reserve for Other Expenses	211,582
Reserve for Taxes, Licenses, and Fees	202,644
Reserve for Current federal income taxes	19,507
Ceded Reinsurance Premiums Payable	720,665
Funds Held Under Reinsurance Treaty	348,823
Reserve for Unauthorized Reinsurance	191
Payable to Parent, Subsidiaries and Affiliates	53,310
Other Liabilities	1,207,062
Total Liabilities	$25,004,123
POLICYHOLDERS' SURPLUS	
Capital Stock & Paid In Surplus	$3,049,530
Surplus	15,608,114
Total Policyholder Surplus	$18,657,644
Total Liabilities and Policyholder Surplus	$43,661,767

CERTIFICATE

I certify that the above financial statements to the best of my knowledge are a true and accurate reflection of the financial condition of the Company as of December 31, 2007. Additionally, I certify that the above financial statements are in agreement with the Statutory Financial Statements filed with the Illinois Department of Insurance as of the same date.

Chief Financial Officer, Vice President & Assistant Treasurer

Licenses and Certifications

California State Contractor's License #805534 C61/D34, D42

ShelterCLEAN Waste Collector Permits

City Of Signal Hill Industrial Waste Discharge Permit

STATE OF CALIFORNIA

Contractors State License Board

Pursuant to Chapter 9 of Division 3 of the Business and Professions Code
and the Rules and Regulations of the Contractors State License Board,
the Registrar of Contractors does hereby issue this license to:

SHELTERCLEAN INC

to engage in the business or act in the capacity of a contractor
in the following classification(s):

D34 - PREFABRICATED EQUIPMENT
HIC - HOME IMPROVEMENT CERTIFICATION
D42 - SIGN INSTALLATION

Witness my hand and seal this day,

March 14, 2003

Issued March 13, 2002

CERTIFIED COPY

This license is the property of the Registrar of Contractors, is not transferrable, and shall be returned to the Registrar upon demand when suspended, revoked, or invalidated for any reason. It becomes void if not renewed.

SIGNATURE OF LICENSEE

SIGNATURE OF LICENSE QUALIFIER

Stephen P. Sands
Registrar of Contractors

805534

License Number

13L-24 (REV. 7-01) OSP 01 59448

AUDIT NO: 284853

State Of California

State of California Department of Consumer Affairs

CONTRACTORS STATE LICENSE BOARD
ACTIVE LICENSE

License Number **805534**

Entity CORP

Business Name SHELTERCLEAN INC

Classification(s) C61/D34 C61/D42

Expiration Date 03/31/2010

COUNTY OF LOS ANGELES

Department of Health Services - Solid Waste Management Program

Waste Collector Permit

Under Provisions of County Ordinance Title 20

2008

COMPANY ID #	S0556
PERMIT FEE	$1,798.00
VEHICLES PERMITTED	12
DATE OF ISSUE	02/12/2008
EXPIRATION DATE	12/31/08

SHELTERCLEAN, INC
2514 NORTH NAOMI STREET
BURBANK, CA 91504

CHIEF, SOLID WASTE MANAGEMENT PROGRAM

COUNTY OF LOS ANGELES

Department of Health Services - Solid Waste Management Program

Waste Collector Permit

Under Provisions of County Ordinance Title 20

2008

COMPANY ID #	S0554
PERMIT FEE	$1,204.00
VEHICLES PERMITTED	3
DATE OF ISSUE	02/12/2008
EXPIRATION DATE	12/31/08

SHELTERCLEAN, INC
2514 N. NAOMI STREET
BURBANK, CA 91504

CHIEF, SOLID WASTE MANAGEMENT PROGRAM

CITY OF SIGNAL HILL

2175 CHERRY AVENUE
SIGNAL HILL, CALIFORNIA 90806
(562) 989-7351 • FAX (562) 989-7391

PERMIT NUMBER 222

☒ New Permit
☐ Permit Revision
☐ Change of Ownership
☐ Non-Use Permit
☐ Storm Water Only

INDUSTRIAL WASTE DISCHARGE PERMIT

COMPANY NAME Shelter clean ☒ CORPORATION ☐ SOLE PROPRIETOR ☐ PARTNERSHIP

ereby makes application for a permit to discharge industrial waste into the public sewer of the City of Signal Hill subject to the provisions of the Signal Hill municipal code. In consideration of the execution of an Industrial Waste ischarge Permit pursuant to this application, the applicant hereby agrees to indemnify, save and keep the City of Signal Hill, its officers, agents and employees free and harmless from and against any and all claims for injury, amage, loss, liability, cost and expense of any name or nature whatsoever, which the City of Signal Hill, its officers, agents, or employees may suffer, sustain, incur, pay out as a result of any and all actions, suits, proceedings, alms and demands which may be brought, made, or filed against the City of Signal Hill, its officers, agents or employees by reason of or arising out of, or in any manner connected with any and all operations authorized or ermitted by the permit.

LOCATION ADDRESS 2475 Lemon Avenue PHONE NUMBER 562-595-6166

MAILING ADDRESS (IF DIFFERENT) 2514 N. Naomi St. Burbank, CA. 91504 (818) 846-1300

TYPE OF INDUSTRY Cleaning of Bus stop shelters/sidewalk SIC CODE 1799

NUMBER OF EMPLOYEES (FULL TIME) 28 (PART TIME) 0 LOT SIZE

WASTEWATER PRODUCING OPERATIONS (i.e. Car washing, food preparation, boiler blowdown, etc.) Wastewater from cleaning Bus stop shelters (General Description, attach additional sheets if necessary)

CONSTITUENTS OF WASTE DISCHARGE (i.e. Soap, oil, grease, dirt, cleaning solutions, etc.) SODA, cigarette butts dirt (General Description, attach additional sheets if necessary)

T TMENT SYSTEM (i.e. Clarifier/grease trap, pH neutralization tank, sample box, filter press, etc.) Clarifier / drain w/ screen (General Description, attach additional sheets if necessary)

METHOD OF DISPOSAL (Check One)	AVERAGE DAILY FLOW RATE	PEAK 5-MINUTE WASTE WATER FLOW RATE	POINT OF CONNECTION TO SANITARY SEWER OR STORM DRAIN
☒ PUBLIC SANITARY SEWER SYSTEM ☒ LOCAL LINE SIZE OF LINE ☐ TRUNK LINE SIZE OF LINE ☐ PRIVATE UNDERGROUND SEPTIC SYSTEM ☐ HAUL TO LEGAL POINT OF DISPOSAL ☐ CLOSED LOOP RECYCLING ☐ SURFACE WATER, STREAM OR STORM DRAIN NPDES PERMIT NUMBER ☐ OTHER (Describe)	100 Gallon per day	7.5 Gallons per minute	Lemon Avenue
	TIME OF DISCHARGE (Hours per day) 6 AM/PM to 12:30 AM/PM		
	DAYS PER WEEK (Circle Days) M T W Th F Sa Su		

NAME OF PERSON AT FACILITY RESPONSIBLE FOR WASTE WATER DISCHARGE

Rafael Mendez — NAME - PLEASE PRINT
Operations Manager — TITLE
562-595-6166 — TELEPHONE

OWNER CERTIFICATION

HEREBY AFFIRM THAT ALL INFORMATION FURNISHED IS TRUE AND CORRECT TO THE BEST OF MY KNOWLEDGE, AND THAT THE APPLICANT HAS READ AND WILL OMPLY WITH ALL ATTACHED CONDITIONS AND LIMITATIONS *(READ AND INITIAL BACK OF THIS FORM).*

SIGNATURE OF OWNER OR CORPORATE OFFICER — PRESIDENT (TITLE) — 718-526-0800 (TELEPHONE) — 9/7/04 (DATE)

FOR OFFICIAL USE ONLY

APPROVED BY

SIGNATURE — DIRECTOR OF PUBLIC WORKS (TITLE) — DATE

HIS FORM SHALL NOT BE CONSIDERED A VALID PERMIT UNLESS PROPERLY SIGNED

SEE BACK OF FORM

City of Signal Hill
Department of Public Works
2175 Cherry Avenue
Signal Hill, California 90806
(562) 989-7353

City Permit Number

222

Issued on

September 22, 2004

Company Information

Shelter Clean
2514 North Naomi Street
Burbank, CA 91504

Site Information

Mr. Rafael Mendez Operations Manager
2475 Lemon Avenue

SPECIAL PERMIT CONDITIONS AND LIMITATIONS

In addition to the standard permit conditions and limitations listed on the reverse side of the permit form, the following special conditions and limitations shall apply to activities performed under this permit:

Condition 1 The peak discharge into sewer lines shall not exceed 7.5 gallons per minute.

Condition 2 The permittee shall comply with the standard conditions and limitations located on the reverse side of the permit.

Condition 3 This permit is for the discharge of wastewater from cleaning bus stop shelters only. Any vehicle fluids such as coolant and oils should be kept in proper storage containers and hauled away by an appropriate waste hauler. Additional operations will require a revised permit.

Condition 4 The permittee is responsible for preventing the discharge of deleterious materials into the sewer system. The permittee shall adopt a program of regular maintenance and cleaning to prevent the discharge of excessive amounts of oil, greases or particulate matter which could cause damage or blockage of the sewer system.

Condition 5 The permittee is required to implement Best Management Practices (BMPs) to reduce the amount of pollutants in stormwater runoff. A BMP pamphlet is included for reference.

Condition 6 The permittee is required to make wastewater operations accessible for City inspection during normal business hours.

Condition 7 This permit will be expired on September 22, 2009. Additional changes will require a revised permit.

Condition 8

Condition 9

Condition 10

Insurance

ShelterCLEAN proof of insurances follows.

ACORD™ CERTIFICATE OF LIABILITY INSURANCE

DATE (MM/DD/YYYY) 1/2/2008

PRODUCER (212) 669-5400 FAX (212) 566-6714
Risk Strategies Company
115 Broadway
Suite 402
New York NY 10006

THIS CERTIFICATE IS ISSUED AS A MATTER OF INFORMATION ONLY AND CONFERS NO RIGHTS UPON THE CERTIFICATE HOLDER. THIS CERTIFICATE DOES NOT AMEND, EXTEND OR ALTER THE COVERAGE AFFORDED BY THE POLICIES BELOW.

INSURED
ShelterCLEAN, Inc.
2514 N. Naomi Street
Burbank CA 91504

INSURERS AFFORDING COVERAGE	NAIC #
INSURER A: Axis Surplus Ins. Co.	
INSURER B: Travelers Ind Co of CT	
INSURER C: Liberty Mutual Ins. Co.	
INSURER D:	
INSURER E:	

COVERAGES

THE POLICIES OF INSURANCE LISTED BELOW HAVE BEEN ISSUED TO THE INSURED NAMED ABOVE FOR THE POLICY PERIOD INDICATED. NOTWITHSTANDING ANY REQUIREMENT, TERM OR CONDITION OF ANY CONTRACT OR OTHER DOCUMENT WITH RESPECT TO WHICH THIS CERTIFICATE MAY BE ISSUED OR MAY PERTAIN, THE INSURANCE AFFORDED BY THE POLICIES DESCRIBED HEREIN IS SUBJECT TO ALL THE TERMS, EXCLUSIONS AND CONDITIONS OF SUCH POLICIES. AGGREGATE LIMITS SHOWN MAY HAVE BEEN REDUCED BY PAID CLAIMS.

INSR LTR	ADD'L INSRD	TYPE OF INSURANCE	POLICY NUMBER	POLICY EFFECTIVE DATE (MM/DD/YY)	POLICY EXPIRATION DATE (MM/DD/YY)	LIMITS	
A		GENERAL LIABILITY X COMMERCIAL GENERAL LIABILITY CLAIMS MADE X OCCUR GEN'L AGGREGATE LIMIT APPLIES PER: X POLICY PRO-JECT LOC	EAP712023-08* **Subject to a $5MM Policy Gen. Agg. Total	1/1/2008	1/1/2009	EACH OCCURRENCE DAMAGE TO RENTED PREMISES (Ea occurrence) MED EXP (Any one person) PERSONAL & ADV INJURY GENERAL AGGREGATE PRODUCTS - COMP/OP AGG Retention	$ 1,000,000 $ 100,000 $ $ 1,000,000 $ **2,000,000 $ 1,000,000 100,000
B		AUTOMOBILE LIABILITY X ANY AUTO ALL OWNED AUTOS SCHEDULED AUTOS HIRED AUTOS NON-OWNED AUTOS	8106754B856TCT08	1/1/2008	1/1/2009	COMBINED SINGLE LIMIT (Ea accident) BODILY INJURY (Per person) BODILY INJURY (Per accident) PROPERTY DAMAGE (Per accident)	$ 1,000,000 $ $ $
		GARAGE LIABILITY ANY AUTO				AUTO ONLY - EA ACCIDENT OTHER THAN AUTO ONLY: EA ACC AGG	$ $ $
		EXCESS/UMBRELLA LIABILITY OCCUR CLAIMS MADE DEDUCTIBLE RETENTION $				EACH OCCURRENCE AGGREGATE	$ $ $ $ $
C		WORKERS COMPENSATION AND EMPLOYERS' LIABILITY ANY PROPRIETOR/PARTNER/EXECUTIVE OFFICER/MEMBER EXCLUDED? If yes, describe under SPECIAL PROVISIONS below	WC7-121-093004-018	1/1/2008	1/1/2009	X WC STATU-TORY LIMITS OTH-ER E.L. EACH ACCIDENT E.L. DISEASE - EA EMPLOYEE E.L. DISEASE - POLICY LIMIT	 $ 1,000,000 $ 1,000,000 $ 1,000,000
		OTHER					

DESCRIPTION OF OPERATIONS/LOCATIONS/VEHICLES/EXCLUSIONS ADDED BY ENDORSEMENT/SPECIAL PROVISIONS

*Cancellation is amened to 10 days notice for non-payment. Certificate holder is included as additional insured as respects General Liability for work performed by the insured under the contract for Los Angeles County-Unincorporated South Area.

CERTIFICATE HOLDER

LAC Dept of Public Works
Att: Angelica Maldonado
Administrative Services Division
P.O. Box 1460
Alhambra, CA 91802-1460

CANCELLATION

SHOULD ANY OF THE ABOVE DESCRIBED POLICIES BE CANCELLED BEFORE THE EXPIRATION DATE THEREOF, THE ISSUING INSURER WILL ENDEAVOR TO MAIL 30 DAYS WRITTEN NOTICE TO THE CERTIFICATE HOLDER NAMED TO THE LEFT, BUT FAILURE TO DO SO SHALL IMPOSE NO OBLIGATION OR LIABILITY OF ANY KIND UPON THE INSURER, ITS AGENTS OR REPRESENTATIVES.

AUTHORIZED REPRESENTATIVE
Michael Christian/LF

© ACORD CORPORATION 1988

Section C

Required Proposal Forms

RFP Forms List

The required forms are included in this section:

PW-1 Verification of Proposal

PW-2 Schedule of Prices

PW-3 County of Los Angeles Contractor Employee Jury Service Program Application

PW-4 Contractor's Industrial Safety Record

PW-5 Conflict of Interest Certification

PW-6 Proposer's Reference List

PW-7 Proposer's Equal Opportunity Certification

PW-8 List of Subcontractors

PW-9 Request for Local Small Business Enterprise (SBE) Preference Program

PW-10 GAIN/GROW Employment Commitment

PW-12 Charitable Contributions Certifications

PW-13 Transitional Job Opportunities Preference Application

PW-14 Statement of Terminated Contracts

PW-15 Proposer's Pending Litigations and Judgments

LW-1 Los Angeles County Code Chapter 2.201-Living Wage Program

LW-2 Living Wage Ordinance-Application for Exemption

LW-3 Contractor Living Wage Declaration

LW-4 Living Wage Acknowledgment and Statement of Compliance

LW-5 Labor/Payroll/Debarment History

LW-6 Guidelines for Assessment of Proposed Labor/Payroll Violations

LW-7 Proposer's Medical Plan Coverage

LW-8 Proposer's Cost Methodology

LW-9 Wage and Hour Keeping for Living Wage Contracts

FORM PW-1

VERIFICATION OF PROPOSAL

DATE: June 27, 2008	THE UNDERSIGNED HEREBY DECLARES AS FOLLOWS:

1. THIS DECLARATION IS GIVEN IN SUPPORT OF A PROPOSAL FOR A CONTRACT WITH THE COUNTY OF LOS ANGELES.

2. NAME OF SERVICE: Maintenance Program For Non-Advertising Bus Stop Amenities-South County (2008-PA034)

DECLARANT INFORMATION

3. NAME OF DECLARANT: Jerome Cooper

4. I AM DULY VESTED WITH THE AUTHORITY TO MAKE AND SIGN INSTRUMENTS FOR AND ON BEHALF OF THE PROPOSER(S). Yes

5. MY TITLE, CAPACITY, OR RELATIONSHIP TO THE PROPOSER(S) IS: President

PROPOSER INFORMATION

6. Proposer's full legal name: ShelterCLEAN, Inc.			Telephone No.: 818.846.1300
Address: 2514 North Naomi Street, Burbank, CA 91504			Fax No.: 818.846.3242
e-mail: info@shelterclean	County WebVen No.: 1291601	IRS No.: 11-3558747	Business License No.:
7. Proposer's fictitious business name(s) or dba(s) (if any): N/A			
County(s) of Registration: N/A		State:	Year(s) became DBA:

8. The Proposer's form of business entity is (CHECK ONLY ONE):

☐ Sole proprietor	Name of Proprietor:	
XX ☐ A corporation:	Corporation's principal place of business: 2514 N. Naomi St., Burbank, CA 91504	
	State of Incorporation: California	Year Incorporated: 2000
☐ Non-profit corporation certified under IRS 501(c) 3 and registered with the CA Attorney General's Registry of Charitable Trusts	President/CEO:	
	Secretary:	
☐ A general partnership:	Names of partners:	
☐ A limited partnership:	Name of general partner:	
☐ A joint venture of:	Names of joint venturers:	
☐ A limited liability company:	Name of managing member:	

9. The only persons or firms interested in this proposal as principals are the following:

Name(s): ShelterCLEAN, Inc.	Title:	Phone: 818.846.1300	Fax: 818.846.3242
Street: 2514 N. Naomi St.	City: Burbank	State: CA	Zip: 91504
Name(s):	Title:	Phone:	Fax:
Street:	City:	State:	Zip:

10. Is your firm wholly or majority owned by, or a subsidiary of another firm? ☐ No XX Yes
If yes, name of parent firm: Shelter Express, Inc.
State of incorporation/registration of parent firm: New York

11. Has your firm done business under any other name(s) within the last five years? XX No ☐ Yes If yes, please list the other name(s):
Name(s): _____ Year of name change: _____
Name(s): _____ Year of name change: _____

12. Is your firm involved in any pending acquisition or merger? XX No ☐ Yes
If yes, indicate the associated company's name: _____

13. Proposer acknowledges that if any false, misleading, incomplete, or deceptively unresponsive statements in connection with this proposal are made, the proposal may be rejected. The evaluation and determination in this area shall be at the Director's sole judgment and the Director's judgment shall be final.

14. CHECK ONE:
☐ (a) I am making these representations and all representation contained in this proposal on my personal knowledge;
OR
XX (b) I am making these representations all representation contained in this proposal based on information and belief that they are true.

I declare under penalty of perjury under the laws of California that is true and correct.

Signature of Proposer or Authorized Agent: Jerome Cooper Date: June 27, 2008

Type name and title: Jerome Cooper, President

1. MAINTENANCE, REPLACEMENT, RELOCATION, REMOVAL, AND REINSTALLATION OF BUS STOP AMENITIES

A. ROUTINE MAINTENANCE (reference Exhibit A, Scope of Work, Section F.5.a.)

(1) Proposed maintenance (including examining electrical or solar-powered lighting for functionality, if applicable) cost for shelter with electric hard-wire, solar panel attached to top of shelter, or no lighting. *Locations are marked "hard-wire", "solar panel", or "none" under the "Lighting" column in Exhibit E.1.

Unit Count		Unit Rate Per Visit		Visit Subtotals		Estimated Weeks	Annual Proposed Amount
189*	X	$ 6.50	=	$ 1,228.50	X	52	= $ 63,882.00
						Subtotal 1.A.(1) =	$63,882.00

(2) Proposed maintenance cost (excluding cost to examine solar-powered lighting for functionality) for shelter with solar panel attached to a stand-alone solar light pole. *Locations are marked "solar pole" under the "Lighting" column in Exhibit E.1.

Unit Count		Unit Rate Per Visit		Visit Subtotals		Estimated Weeks	Annual Proposed Amount
22*	X	$ 7.75	=	$ 170.50	X	52	= $ 8,866.00
						Subtotal 1.A.(2) =	$8,866.00

(3) Proposed cost for pressure washing each bus shelter. *Locations in Exhibit E.1.

Unit Count		Unit Rate Per Visit		Visit Subtotals		Estimated Visits per Year	Annual Proposed Amount
211*	X	$ 21.40	=	$ 4,515.40	X	9	= $ 40,638.60
						Subtotal 1.A.(3) =	$40,638.60

(4) Proposed maintenance cost for the stand-alone solar light pole. *Locations in Exhibits E.4 and E.5.

Unit Count		Unit Rate Per Visit		Visit Subtotals		Estimated Visits per Year	Annual Proposed Amount
218*	X	$ 4.75	=	$ 1,035.50	X	~~6~~ 52	= $ 53,846.00
						Subtotal 1.A.(4) =	$53,846.00

(5) Proposed maintenance cost for bus bench locations. *Locations in Exhibit E.2.							
Unit Count		Unit Rate Per Visit		Visit Subtotals		Estimated Weeks	Annual Proposed Amount
97*	X	$ 4.35	=	$ 421.95	X	52	= $ 21,941.40
						Subtotal 1.A.(5) =	$21,941.40

(6) Proposed maintenance cost for each stand-alone trash receptacle. *Locations in Exhibit E.3.							
Unit Count		Unit Rate Per Visit		Visit Subtotals		Estimated Weeks	Annual Proposed Amount
255*	X	$ 2.30	=	$ 586.50	X	52	= $ 30,498.00
						Subtotal 1.A.(6) =	$30,498.00

B. REPLACEMENT (reference Exhibit A, Scope of Work, subsection F.5.d.)

(1) Replacement of bus stop shelter (without PSA panel) structure ONLY.				
Estimated Units per Year		Unit Rate		Annual Proposed Amount
10	X	$ 8,191.50	=	$ 81,915.00
			Subtotal 1.B.(1) =	$81,915.00

(2) Replacement of Public Service Announcement (PSA) panel glass.				
Estimated Units per Year		Unit Rate		Annual Proposed Amount
50	X	$ 67.0	=	$ 3,350.00
			Subtotal 1.B.(2) =	3,350.00

(3) Replacement of PSA display mounting frame.				
Estimated Units per Year		Unit Rate		Annual Proposed Amount
30	X	$ 1,028.00	=	$ 30,840.00
			Subtotal 1.B.(3) =	$30,840.00

(4) Replacement of side ornate iron panel for bus stop shelter.				
Estimated Units per Year		Unit Rate		Annual Proposed Amount
10	X	$ 729.0	=	$ 7,290.00
			Subtotal 1.B.(4) =	$7,290.00

(5) Replacement of solar panel attached to top of shelter.				
Estimated Units per Year		Unit Rate		Annual Proposed Amount
60	X	$ 1,015.00	=	$ 60,900.00
			Subtotal 1.B.(5) =	$60,900.00

(6) Replacement of solar system kit (includes 2 solar panels, batteries, LED lamp, and solar lighting controller) for solar-powered lighting attached to shelter.				
Estimated Units per Year		Unit Rate		Annual Proposed Amount
10	X	$ 2,193.00	=	$ 21,930.00
			Subtotal 1.B.(6) =	$21,930.00

(7) Replacement of LED lamp (SW WP6X-LED) for bus stop shelter.				
Estimated Units per Year		Unit Rate		Annual Proposed Amount
20	X	$ 381.0	=	$ 7,620.00
			Subtotal 1.B.(7) =	$7,620.00

(8) Replacement of stand-alone Carmanah i-Stop™ F1 solar-powered light pole (entire unit) with Carmanah EverGEN™ Solar Engine SE-10 solar-powered light pole and LED-4SE luminaire.				
Estimated Units per Year		Unit Rate		Annual Proposed Amount
10	X	$ 4,105.00	=	$ 41,050.00
			Subtotal 1.B.(8) =	$41,050.00

(9) Replacement of solar panel ONLY attached to stand-alone Carmanah I-Stop™ F1 solar-powered light pole.				
Estimated Units per Year		Unit Rate		Annual Proposed Amount
3	X	$ 408.0	=	$ 1,224.00
			Subtotal 1.B.(9) =	$1,224.00

(10) Replacement of solar panel ONLY attached to stand-alone All Purpose Manufacturing, Inc. Model No. 04-01-A solar-powered light pole.				
Estimated Units per Year		Unit Rate		Annual Proposed Amount
3	X	$ 378.0	=	$ 1,134.00
			Subtotal 1.B.(10) =	$1,134.00

(11) Replacement of the 10-foot pole ONLY for the Carmanah I-Stop™ F1 solar-powered light pole.				
Estimated Units per Year		Unit Rate		Annual Proposed Amount
5	X	$ 857.0	=	$ 4,285.00
			Subtotal 1.B.(11) =	$4,285.00

(12) Replacement of the 10-foot pole ONLY for the All Purpose Manufacturing, Inc. Model No. 04-01-A solar-powered light pole.				
Estimated Units per Year		Unit Rate		Annual Proposed Amount
5	X	$ 628.0	=	$ 3,140.00
			Subtotal 1.B.(12) =	$3,140.00

(13) Replacement of bus bench.				
Estimated Units per Year		Unit Rate		Annual Proposed Amount
20	X	$ 931.0	=	$ 18,620.00
			Subtotal 1.B.(13) =	$18,620.00

(14) Replacement of entire trash receptacle.				
Estimated Units per Year		Unit Rate		Annual Proposed Amount
30	X	$ 785.00	=	$ 23,550.00
			Subtotal 1.B.(14) =	$23,550.00

(15) Replacement of trash receptacle exterior frame ONLY.				
Estimated Units per Year		Unit Rate		Annual Proposed Amount
30	X	$ 524.0	=	$ 15,720.00
			Subtotal 1.B.(15) =	$15,720.00

(16) Replacement of trash receptacle aluminum liner (container) ONLY.				
Estimated Units per Year		Unit Rate		Annual Proposed Amount
30	X	$ 45.00	=	$ 1,350.00
			Subtotal 1.B(16) =	$1,350.00

(17) Replacement of trash receptacle dome cover ONLY.				
Estimated Units per Year		Unit Rate		Annual Proposed Amount
30	X	$144.00	=	$ 4,320.00
			Subtotal 1.B.(17) =	$4,320.00

(18) Replacement of PSA (reference Exhibit A, Scope of Work, subsection F.5.d.2.).				
Estimated Units per Year		Unit Rate		Annual Proposed Amount
100	X	$ 4.50	=	$ 450.00
			Subtotal 1.B.(18) =	$450.00

(19) Replacement of white translucent back support screen for PSA.				
Estimated Units per Year		Unit Rate		Annual Proposed Amount
20	X	$ 39.0	=	$ 780.00
			Subtotal 1.B.(19) =	$780.00

(20) Replacement of Metro transit map kiosk (mounted on stand-alone Carmanah i-Stop™ F1 solar-powered light pole).				
Estimated Units per Year		Unit Rate		Annual Proposed Amount
5	X	$ 1,139.00	=	$ 5,695.00
			Subtotal 1.B.(20)	$5,695.00

(21) Replacement of Foothill Transit transit map kiosk (mounted on stand-alone All Purpose Manufacturing, Inc. Model No. 04-01-A solar-powered light pole).				
Estimated Units per Year		Unit Rate		Annual Proposed Amount
5	X	$ 507.00	=	$ 2,535.00
			Subtotal 1.B.(21) =	$2,535.00

(22) Replacement of acrylic glass (transparent plastic) for Metro transit map kiosk.				
Estimated Units per Year		Unit Rate		Annual Proposed Amount
30	X	$ 39.00	=	$ 1,170.00
			Subtotal 1.B.(22) =	$1,170.00

(23) Replacement of anti-mar graffiti-resistant film (to cover acrylic glass for Metro transit map kiosk).				
Estimated Units per Year		Unit Rate		Annual Proposed Amount
30	X	$30.00	=	$ 900.00
			Subtotal 1.B.(23) =	$900.00

C. RELOCATION (reference Exhibit A, Scope of Work, subsection F.5.e.)

(1) Relocation of bus stop shelter (including bench, trash receptacle, and solar panel attached to top of shelter).				
Estimated Units per Year		Unit Rate		Annual Proposed Amount
5	X	$ 765.00	=	$ 3,825.00
			Subtotal 1.C.(1) =	3,825.00

(2) Relocation of bus stop shelter (including bench, trash receptacle, and stand-alone Carmanah I-Stop™ F1 solar-powered light pole).				
Estimated Units per Year		Unit Rate		Annual Proposed Amount
3	X	$765.00	=	$ 2,295.00
			Subtotal 1.C.(2) =	$2,295.00

(3) Relocation of bus stop shelter (including bench, trash receptacle, and stand-alone All Purpose Manufacturing, Inc. Model No. 04-01-A solar-powered light pole).				
Estimated Units per Year		Unit Rate		Annual Proposed Amount
3	X	$ 1,837.00	=	$ 5,511.00
			Subtotal 1.C.(3) =	$5,511.00

(4) Relocation of stand-alone Carmanah i-Stop™ F1 solar-powered light pole.				
Estimated Units per Year		Unit Rate		Annual Proposed Amount
30	X	$59.00	=	$ 1,770.00
			1.C.(4) =	$1,770.00

(5) Relocation of stand-alone All Purpose Manufacturing Model No. 04-01-A solar-powered light pole.				
Estimated Units per Year		Unit Rate		Annual Proposed Amount
2	X	$ 850.00	=	$ 1,770.00
			Subtotal 1.C.(5) =	$1,700.00

(6) Relocation of bus bench.				
Estimated Units per Year		Unit Rate		Annual Proposed Amount
15	X	$ 114.00	=	$ 1,710.00
			Subtotal 1.C.(6) =	$1,710.00

(7) Relocation of trash receptacle.				
Estimated Units per Year		Unit Rate		Annual Proposed Amount
30	X	$ 63.00	=	$ 1,890.00
			Subtotal 1.C.(7)	$1,890.00

D. REMOVAL (reference Exhibit A, Scope of Work, subsection F.5.c.)

(1) Removal of bus stop shelter (including bench, trash receptacle, and solar panel attached to top of shelter, hard-wire, or no lighting; stand-alone solar-powered light pole to be charged separately).				
Estimated Units per Year		Unit Rate		Annual Proposed Amount
5	X	$ 545.00	=	$ 2,725.00
			Subtotal 1.D.(1) =	$2,725.00

(2) Removal of stand-alone Carmanah i-Stop™ F1 solar-powered light pole.				
Estimated Units per Year		Unit Rate		Annual Proposed Amount
3	X	$ 609.00	=	$ 1,827.00
			Subtotal 1.D.(2) =	$1,827.00

(3) Removal of stand-alone All Purpose Manufacturing, Inc. Model No. 04-01-A solar-powered light pole.				
Estimated Units per Year		Unit Rate		Annual Proposed Amount
3	X	$ 609.00	=	$ 1,827.00
			Subtotal 1.D.(3) =	$1,827.00

(4) Removal of bus bench.				
Estimated Units per Year		Unit Rate		Annual Proposed Amount
5	X	$ 48.00	=	$ 240.00
			Subtotal 1.D.(4) =	$240.00

(5) Removal of trash receptacle.				
Estimated Units per Year		Unit Rate		Annual Proposed Amount
5	X	$ 48.00	=	$ 240.00
			Subtotal 1.D.(5) =	$240.00

E. REINSTALLATION (reference Exhibit A, Scope of Work, subsection F.5.f.)

(1) Reinstallation of bus stop shelter (including bench, trash receptacle, and solar panel attached to top of shelter; stand-alone solar-powered light pole to be charged separately).				
Estimated Units per Year		Unit Rate		Annual Proposed Amount
5	X	$ 650.00	=	$ 3,250.00
			Subtotal 1.E.(1) =	$3,250.00

(2) Reinstallation of stand-alone Carmanah i-Stop™ F1 solar-powered light pole.				
Estimated Units per Year		Unit Rate		Annual Proposed Amount
3	X	$ 36.00	=	$ 108.00
			Subtotal 1.E.(2) =	$108.00

(3) Reinstallation of stand-alone All Purpose Manufacturing, Inc. Model No. 04-01-A solar-powered light pole.				
Estimated Units per Year		Unit Rate		Annual Proposed Amount
3	X	$ 1147.00	=	$ 3,441.00
			Subtotal 1.E.(3) =	$3,441.00

(4) Reinstallation of bus bench.				
Estimated Units per Year		Unit Rate		Annual Proposed Amount
15	X	$ 98.00	=	$ 1,470.00
			Subtotal 1.E.(4) =	$1,470.00

(5) Reinstallation of trash receptacle.				
Estimated Units per Year		Unit Rate		Annual Proposed Amount
30	X	$ 48.0	=	$ 1,440.00
			Subtotal 1.E.(5) =	$1,440.00

2. COLLECTION, TRANSPORTATION, AND DISPOSAL OF WASTE

A. Collection, transportation and disposal of waste once a day, three days a week, Monday through Friday, at designated transit stops located in the unincorporated southern area of the County, as specified in Exhibits E.1, E.2, and E.3. (Also reference Exhibit A, Scope of Work, Subsection F.6)

County reserves the right to reduce or increase collection frequency of any unit on any route at any time during the Contract period.

Waste collection, transportation, and disposal at a permitted materials recovery facility (MRF). *Locations in Exhibits E.1, E.2 and E.3.							
Daily Unit Count		Unit Rate		Daily Subtotals		Days	Annual Proposed Amount
551*	X	$ 4.35	=	$ 2,396.85	X	156	= $ 373,908.60
						Subtotal 2.A =	$373,908.60

TOTAL PROPOSED ANNUAL PRICE

Total proposed annual price for maintenance, replacement, relocation, removal, and reinstallation of bus stop shelters, solar-powered lighting, bus benches, and trash receptacles; and the collection, transportation, and disposal of waste once a day, three days a week, Monday through Friday is:

Total summation of all Subtotals from 1.A. (1) to 2.A.: $ 968,617.60.

ShelterCLEAN, Inc.

Complete Legal Name of Proposer (Print or Type)

[signature]	7/9/08	805534
Signature	**Date**	**Required License Number**

Address:

2514 N. Naomi St.

Street

Burbank	91504	818.846.1300
City	**Zip Code**	**Telephone**

FORM PW-3

COUNTY OF LOS ANGELES CONTRACTOR EMPLOYEE JURY SERVICE PROGRAM
APPLICATION FOR EXCEPTION AND CERTIFICATION FORM

This contract is subject to the County of Los Angeles Contractor Employee Jury Service Program (Program) (Los Angeles County Code, Chapter 2.203). All contractors and subcontractors must complete this form to either (1) request an exception from the Program requirements or (2) certify compliance. Upon review of the submitted form, the County department will determine, in its sole discretion, whether the bidder or proposer is excepted from the Program.

Company Name:	ShelterCLEAN, Inc.		
Company Address:	2514 N. Naomi St.		
City: Burbank		State: CA	Zip Code: 91504
Telephone Number: 818.846.1300			
(Type of Goods or Services):	bus stop/street furniture maintenance, repair, installation; trash collection		

If you believe the Jury Service Program does not apply to your business, check the appropriate box in Part I (you must attach documentation to support your claim). If the Jury Service Program applies to your business, complete Part II to certify compliance with the Program. Whether you complete Part I or Part II, sign and date this form.

Part I: Jury Service Program Is Not Applicable to My Business

☐ My business does not meet the definition of "contractor," as defined in the Program as it has not received an aggregate sum of $50,000 or more in any 12-month period under one or more County contracts or subcontracts (this exception is not available if the contract/purchase order itself will exceed $50,000). I understand that the exception will be lost and I must comply with the Program if my revenues from the County exceed an aggregate sum of $50,000 in any 12-month period.

☐ My business is a small business as defined in the Program. It 1) has ten or fewer employees; and, 2) has annual gross revenues in the preceding twelve months which, if added to the annual amount of this contract, are $500,000 or less; and, 3) is not an affiliate or subsidiary of a business dominant in its field of operation, as defined below. I understand that the exemption will be lost and I must comply with the Program if the number of employees in my business and my gross annual revenues exceed the above limits.

"Dominant in its field of operation" means having more than ten employees, including full-time and part-time employees, and annual gross revenues in the preceding twelve months, which, if added to the annual amount of the contract awarded, exceed $500,000.

"Affiliate or subsidiary of a business dominant in its field of operation" means a business which is at least 20 percent owned by a business dominant in its field of operation, or by partners, officers, directors, majority stockholders, or their equivalent, of a business dominant in that field of operation.

☐ My business is subject to a Collective Bargaining Agreement that expressly provides that it supersedes all provisions of the Program. **ATTACH THE AGREEMENT.**

Part II: Certification of Compliance

☒ My business has and adheres to a written policy that provides, on an annual basis, no less than five days of regular pay for actual jury service for full-time employees of the business who are also California residents, or my company will have and adhere to such a policy prior to award of the contract.

I declare under penalty of perjury under the laws of the State of California that the information stated above is true and correct.

Print Name: Alan Mudge	Title: General Manager
Signature:	Date: June 27, 2008

FORM PW-4

CONTRACTOR'S INDUSTRIAL SAFETY RECORD

PROPOSED CONTRACT FOR MAINTENANCE PROGRAM FOR NONADVERVERTISING BUS STOP AMENITIES-SOUTH COUNTY (2008-PA034
SERVICE BY PROPOSER ShelterCLEAN, Inc.
PROPOSAL DATE: July 9, 2008

This information must include all work undertaken in the State of California by the proposer and any partnership, joint venture, or corporation that any principal of the proposer participated in as a principal or owner for the last five calendar years and the current calendar year prior to the date of proposal submittal. Separate information shall be submitted for each particular partnership, joint venture, corporate, or individual proposer. The proposer may attach any additional information or explanation of data which the proposer would like taken into consideration in evaluating the safety record. An explanation must be attached to the circumstances surrounding any and all fatalities.

5 CALENDAR YEARS PRIOR TO CURRENT YEAR

	2003	2004	2005	2006	2007	Total	Current Year to Date
1. Number of contracts.	10	11	11	15	13	60	12
2. Total dollar amount of Contracts (in thousands of dollars).	3414	4554	4966	5380	6928	25,242	2642
3. Number of fatalities.	--0--	--0--	--0--	--0--	--0--	--0--	--0--
4. Number of lost workday cases.	3	15	9	12	4	43	4
5. Number of lost workday cases involving permanent transfer to another job or termination of employment.	--0--	--0--	--0--	--0--	--0--	--0--	--0--
6. Number of lost workdays.	478	278	99	22	261	1138	29

The above information was compiled from the records that are available to me at this time, and I declare under penalty of perjury that the information is true and accurate within the limitations of those records.

ShelterCLEAN, Inc./Pamela Garvin
Name of Proposer or Authorized Agent (print)

Pamela Garvin
Signature

June 27, 2008
Date

FORM PW-5

CONFLICT OF INTEREST CERTIFICATION

I, Jerome Cooper

- ☐ sole owner
- ☐ general partner
- ☐ managing member
- ☑ President, Secretary, or other proper title) _____

of ShelterCLEAN, Inc.
Name of proposer

make this certification in support of a proposal for a contract with the County of Los Angeles for services within the scope of Los Angeles County Code Section 2.180.010, which provides as follows:

> Contracts Prohibited. A. Notwithstanding any other section of this code, the county shall not contract with, and shall reject any bid or proposal submitted by, the persons or entities specified below, unless the board of supervisors finds that special circumstances exist which justify the approval of such contract.
>
> 1. Employees of the county or of public agencies for which the board of supervisors is the governing body;
>
> 2. Profit-making firms or businesses in which employees described in subdivision 1 of subsection A serve as officers, principals, partners, or major shareholders;
>
> 3. Persons who, within the immediately preceding 12 months, came within the provisions of subdivision 1 of subsection A, and who:
>
> (a) Were employed in positions of substantial responsibility in the area of service to be performed by the contract; or
>
> (b) Participated in any way in developing the contract of its service specifications; and
>
> 4. Profit-making firms or businesses in which the former employees described in subdivision 3 of subsection A, serve as officers, principals, partners, or major shareholders.

I hereby certify I am informed and believe that personnel who developed and/or participated in the preparation of this contract do not fall within scope of the Los Angeles County Code Section 2.180.010 as cited above. Furthermore, that no County employee whose position in the County enables him/her to influence the award of this contract, or any competing contract, and no spouse or economic dependent of such employee is or shall be employed in any capacity by the Contractor herein, or has or shall have any direct or indirect financial interest in this contract. I understand and agree that any falsification in this Certificate will be grounds for rejection of this Proposal and cancellation of any contract awarded pursuant to this Proposal.

I certify under penalty of perjury under the laws of California that the foregoing is true and correct.

Signed Jerome Cooper Date June 27, 2008

FORM PW-6

PROPOSER'S REFERENCE LIST

PROPOSED CONTRACT FOR: MAINTENANCE PROGRAM FOR NONADVERTISING BUS STOP AMENITIES-SOUTH COUNTY (2008-PA034)

Provide a comprehensive reference list of all contracts for goods and/or services provided by the Proposer during the previous three years. Please verify all contact names, telephone and fax numbers, and e-mail addresses before listing. Incorrect names, telephone and/or fax numbers, or e-mail addresses will be disregarded. Use additional pages if required.

A. COUNTY OF LOS ANGELES AGENCIES

All contracts with the County during the previous three years must be listed.

SERVICE: CONTRACT#74399	SERVICE DATES: 3/18/03-2/28/08
DEPT/ DISTRICT: LA COUNTY PUBLIC WORKS-TRANSIT	
CONTACT: FRED WONG	
TELEPHONE: 626.458.3907	
FAX: 626.979.5313	
E-MAIL: fwong@ladpw.org	

SERVICE: CONTRACT#74400	SERVICE DATES: 3/18/03-2/28/08
DEPT/DISTRICT: LA COUNTY PUBLIC WORKS-TRANSIT	
CONTACT: FRED WONG	
TELEPHONE: 626.458.3907	
FAX: 626.979.5313	
E-MAIL: fwong@ladpw.org	

SERVICE: CONTRACT #75964	SERVICE DATES: 1/1/07-12/31/07
DEPT/ DISTRICT: LA COUNTY PUBLIC WORKS-ROAD MAINT	
CONTACT: JASON SIMMONS	
TELEPHONE: 562.869.1176	
FAX: 562.862.3718	
E-MAIL: jsimmons@ladpw.org	

SERVICE: CONTRACT #7596	SERVICE DATES: 1/1/07-12/31/07
DEPT/DISTRICT: LA COUNTY PUBLIC WORKS-ROAD MAINT D-3	
CONTACT: BOB GYSEL	
TELEPHONE: 310.348.6448 EXT 227	
FAX: 310.649.0402	
E-MAIL: bgysel@ladpw.org	

B. OTHER GOVERNMENTAL AGENCIES AND PRIVATE COMPANIES

SERVICE: Bus Shelter Maint	SERVICE DATES: 5/1/89-Present
AGENCY/ FIRM: CBS/DECAUX, LLC	
ADDRESS: 1320 NEWTON ST., LOS ANGELES, CA 90021	
CONTACT: FRANCOIS NION	
TELEPHONE: 213.608.0910	
FAX: 213.608.0901	
E-MAIL: francois.nion@jcdecauxna.com	

SERVICE: Bus Stop Maint	SERVICE DATES: 12/1/03-11/30/08
AGENCY/ FIRM: OCTA	
ADDRESS: 550 S. MAIN ST., 4TH FL., ORANGE, CA 92613-1584	
CONTACT: BILL BATORY	
TELEPHONE: 714.560.5912	
FAX: 714.560.5391	
E-MAIL: bbatory@octa.net	

SERVICE: Bus Shelter/Bench Maint	SERVICE DATES: 8/1/04-Present
AGENCY/ FIRM: CITY OF LAKE FOREST	
ADDRESS: 25550 COMMERCENTRE DR, ST 100, LAKE FOREST	
CONTACT: LUIS ESTEVEZ	
TELEPHONE: 949.461.3480	
FAX: 949.461.3511	
E-MAIL: lestevez@ci.lake-forest.ca.us	

SERVICE: Bus Shelter/Bench Maint	SERVICE DATES: 9/1/06-Present
AGENCY/ FIRM: CITY OF LANCASTER	
ADDRESS: 44933 FERN AVE, LANCASTER, CA 93534-2461	
CONTACT: CHRIS LUDLUM	
TELEPHONE: 661.723.6224	
FAX: 661.723.6222	
E-MAIL: cludlum@cityoflancaster.org	

FORM PW-6

PROPOSER'S REFERENCE LIST

PROPOSED CONTRACT FOR: MAINTENANCE PROGRAM FOR NONADVERTISING BUS STOP AMENITIES-SOUTH COUNTY (2008-PA034)

Provide a comprehensive reference list of all contracts for goods and/or services provided by the Proposer during the previous three years. Please verify all contact names, telephone and fax numbers, and e-mail addresses before listing. Incorrect names, telephone and/or fax numbers, or e-mail addresses will be disregarded. Use additional pages if required.

A. COUNTY OF LOS ANGELES AGENCIES

All contracts with the County during the previous three years must be listed.

SERVICE:	SERVICE DATES:
DEPT/ DISTRICT:	
CONTACT:	
TELEPHONE:	
FAX:	
E-MAIL:	

SERVICE:	SERVICE DATES:
DEPT/DISTRICT:	
CONTACT:	
TELEPHONE:	
FAX:	
E-MAIL:	

SERVICE:	SERVICE DATES:
DEPT/ DISTRICT:	
CONTACT:	
TELEPHONE:	
FAX:	
E-MAIL:	

SERVICE:	SERVICE DATES:
DEPT/DISTRICT:	
CONTACT:	
TELEPHONE:	
FAX:	
E-MAIL:	

B. OTHER GOVERNMENTAL AGENCIES AND PRIVATE COMPANIES

SERVICE: Property Mgmt/Maintenance	SERVICE DATES: 10/1/98-Present
AGENCY/ FIRM: Los Angeles Dept. of Transportation	
ADDRESS: 100 S. Main Street, 10th floor, Los Angeles CA 90012	
CONTACT: Tom Chang	
TELEPHONE: (213) 928-9783	
FAX: (213) 928-9768	
E-MAIL: tom.chang@lacity.org	

SERVICE: Bus Stop Maint	SERVICE DATES: 11/103-present
AGENCY/ FIRM: City of Irwindale	
ADDRESS: 5050 N. Irwindale Ave., Irwindale, CA 91706	
CONTACT: Mike Rados	
TELEPHONE: 626-430-2280	
FAX: 626-430-2281	
E-MAIL: mikerados@ci.irwindale.ca.us	

SERVICE:	SERVICE DATES:
AGENCY/ FIRM:	
ADDRESS:	
CONTACT:	
TELEPHONE:	
FAX:	
E-MAIL:	

SERVICE:	SERVICE DATES:
AGENCY/ FIRM:	
ADDRESS:	
CONTACT:	
TELEPHONE:	
FAX:	
E-MAIL:	

FORM PW-7

PROPOSER'S EQUAL EMPLOYMENT OPPORTUNITY CERTIFICATION

Proposer's Name	ShelterCLEAN, Inc.
Address	2514 North Naomi Street, Burbank, CA 91504
Internal Revenue Service Employer Identification Number	11-3558747

In accordance with Los Angeles County Code Section 4.32.010, the Proposer certifies and agrees that all persons employed by it, its affiliates, subsidiaries, or holding companies are and will be treated equally by the firm without regard to or because of race, religion, ancestry, national origin, or sex and in compliance with all anti-discrimination laws of the United States of America and the State of California.

1.	The proposer has a written policy statement prohibiting any discrimination in all phases of employment.	☒	YES
		☐	NO
2.	The proposer periodically conducts a self- analysis or utilization analysis of its work force.	☒	YES
		☐	NO
3.	The proposer has a system for determining if its employment practices are discriminatory against protected groups.	☒	YES
		☐	NO
4.	Where problem areas are identified in employment practices, the proposer has a system for taking reasonable corrective action to include establishment of goals and timetables.	☒	YES
		☐	NO

Proposer	ShelterCLEAN, Inc.		
Authorized representative	Pamela Garvin, Controller/EOE Officer		
Signature	Pamela Garvin	Date	June 27, 2008

LIST OF SUBCONTRACTORS

Proposer is required to complete the following. Any Subcontractors listed must be properly licensed under the laws of the State of California for the type of service that they are to perform, AND THEIR LICENSE NUMBERS MUST BE LISTED HEREIN. Failure to do so may result in delay of the award of contract. Do not list alternate subcontractors for the same service.

☒ Proposer in providing the requested services will not utilize Subcontractors. Proposer will perform all required services.

Name Under Which Subcontractor is Licensed	License Number	Address	Specific Description of Subcontract Service

FORM PW-9

All proposers responding to the Request for Proposals must complete and return this form for proper consideration of the proposal.

FIRM NAME:	ShelterCLEAN, Inc.
My County (WebVen) Vendor Number:	11291601

I. LOCAL SMALL BUSINESS ENTERPRISE PREFERENCE PROGRAM:

☐ As Local SBE certified by the County of Los Angeles Office of Affirmative Action Compliance as of the date of this proposal/bid's submission, I request this proposal/bid be considered for the Local SBE Preference.

☐ Attached is a copy of Local SBE certification issued by the County.

II. FIRM/ORGANIZATION INFORMATION: The information requested below is for statistical purposes only. On final analysis and consideration of award, contractor/vendor will be selected without regard to race/ethnicity, color, religion, sex, national origin, age, sexual orientation or disability.

Business Structure: ☐ Sole Proprietorship ☐ Partnership ☒ Corporation ☐ Nonprofit ☐ Franchise

☐ Other (Please Specify):

Total Number of Employees (including owners): Ninety-six (96)

Race/Ethnic Composition of Firm. Please distribute the above total number of individuals into the following categories:

Race/Ethnic Composition	Owners/Partners and Active Partners		Managers		Staff	
	Male	Female	Male	Female	Male	Female
Black/African American					2	
Hispanic/Latino			3	1	57	25
Asian or Pacific Islander						
American Indian						
Filipino					1	
White			2	1	4	1

III. PERCENTAGE OF OWNERSHIP IN FIRM: Please indicate by percentage (%) how ownership of the firm is distributed.

	Black/African American	Hispanic/ Latino	Asian or Pacific Islander	American Indian	Filipino	White
Male	%	%	%	%	%	%
Women	%	%	%	%	%	%

N/A-Company is owned by a parent corporation, which is held by a public company with hundreds of shareholders.

IV. CERTIFICATION AS MINORITY, WOMEN, DISADVANTAGED, AND DISABLED VETERAN BUSINESS ENTERPRISES: If your firm is currently certified as a minority, women, disadvantaged or disabled veteran owned business enterprise by a public agency, complete the following and attach a copy of your proof of certification. (Use back of form, if necessary.)

Agency Name	Minority	Women	Disadvantaged	Disabled Veteran	Expiration Date

V. DECLARATION: I DECLARE UNDER PENALTY OF PERJURY UNDER THE LAWS OF THE STATE OF CALIFORNIA THAT THE ABOVE INFORMATION IS TRUE AND CORRECT.

Authorized Signature:	Title:	Date:
Pamela Lawrence	Controller	June 27, 2008

FORM PW-10

GAIN and GROW EMPLOYMENT COMMITMENT

The undersigned:

☐ has hired participants from the County's Department of Social Services' Greater Avenue for Independence (GAIN) and General Relief Opportunity for Work (GROW) employment programs.

OR

XX☐ declares a willingness to consider GAIN and GROW participants for any future employment opening if participant(s) meet the minimum qualification for that opening, and

declares a willingness to provide employed GAIN and GROW participants access to proposer's employee mentoring program(s), if available, to assist those individuals in obtaining permanent employment and/or promotional opportunities.

Signature	Title General Manager
Firm Name ShelterCLEAN, Inc.	Date June 27, 2008

FORM PW-12

CHARITABLE CONTRIBUTIONS CERTIFICATION

Company Name

ShelterCLEAN, Inc

Address

2514 N. NAOMI ST., BURBANK, CA 91504

Internal Revenue Service Employer Identification Number

11-3558747

California Registry of Charitable Trusts "CT" number (if applicable)

The Nonprofit Integrity Act (SB 1262, Chapter 919) added requirements to California's Supervision of Trustees and Fundraisers for Charitable Purposes Act, which regulates those receiving and raising charitable contributions.

CERTIFICATION	YES	NO
Proposer or Contractor has examined its activities and determined that it does not now receive or raise charitable contributions regulated under California's Supervision or Trustees and Fundraisers for Charitable Purposes Act. If Proposer engages in activities subjecting it to those laws during the term of a County contract, it will timely comply with them and provide County a copy of its initial registration with the California State Attorney General's Registry of Charitable Trusts when filed.	(XX)	( )
OR		
Proposer or Contractor is registered with the California Registry of Charitable Trusts under the CT number listed above and is in compliance with its registration and reporting requirements under California law. Attached is a copy of its most recent filing with the Registry of Charitable Trusts as required by Title 11 California Code of Regulations, sections 300-301 and Government Code sections 12585-12586.	( )	( )

Jerome Cooper

Signature

June 27, 2008

Date

Jerome Cooper, President

Name and Title (please type or print)

FORM PW-13

TRANSITIONAL JOB OPPORTUNITIES PREFERENCE APPLICATION

COMPANY NAME: ShelterCLEAN, Inc		
COMPANY ADDRESS: 2514 N. NAOMI ST.		
CITY: BURBANK	STATE: CA	ZIP CODE: 91504

XXX ☐ I am not requesting consideration under the County's Transitional Job Opportunities Preference Program.

I hereby certify that I meet all the requirements for this program:

☐ My business is a non-profit corporation qualified under Internal Revenue Services Code - Section 501(c)(3) and has been such for three years *(attach IRS Determination Letter)*;

☐ I have submitted my three most recent annual tax returns with my application;

☐ I have been in operation for at least one year providing transitional job and related supportive services to program participants; and

☐ I have submitted a profile of our program; including a description of its components designed to help the program participants, number of past program participants and any other information requested by the contracting department.

I declare under penalty of perjury under the laws of the State of California that the information herein is true and correct.

PRINT NAME: Alan Mudge	TITLE: General Manager
SIGNATURE:	DATE: June 27, 2008

REVIEWED BY COUNTY:

SIGNATURE OF REVIEWER	APPROVED	DISAPPROVED	DATE

FORM PW-14

PROPOSER'S LIST OF TERMINATED CONTRACTS

PROPOSER'S NAME: ShelterCLEAN, Inc

☒ XX **Proposer has not had any contracts terminated in the past three years.**

Proposer must list all contracts that have been terminated within the past three years. Terminated contracts are those contracts terminated by an agency or firm before the contract's expiration date.

SERVICE:	TERMINATING DATE:
NAME OF TERMINATING FIRM	
ADDRESS OF FIRM	
CONTACT PERSON:	
TELEPHONE:	
FAX:	
E-MAIL:	

SERVICE:	TERMINATING DATE:
NAME OF TERMINATING FIRM	
ADDRESS OF FIRM	
CONTACT PERSON:	
TELEPHONE:	
FAX:	
E-MAIL:	

SERVICE:	TERMINATING DATE:
NAME OF TERMINATING FIRM	
ADDRESS OF FIRM	
CONTACT PERSON:	
TELEPHONE:	
FAX:	
E-MAIL:	

SERVICE:	TERMINATING DATE:
NAME OF TERMINATING FIRM	
ADDRESS OF FIRM	
CONTACT PERSON:	
TELEPHONE:	
FAX:	
E-MAIL:	

SIGNATURE Jaime Casper **DATE:** June 27, 2008

FORM PW-15

PROPOSER'S PENDING LITIGATION AND JUDGMENTS

Proposer's Name: ShelterCLEAN, Inc

☒ **Proposer and/or principals are not currently involved in any pending litigation; are not aware of any threatened litigation were they would be a party; and have not had any judgments placed against them within the last five years as of the date of proposal submission.**

Proposer and/or principals of the Proposer must list below (use additional pages if necessary) all pending litigation, threatened litigation, and/or any judgments placed against them within the last five years as of the date of proposal submission.

A. ☐ Pending Litigation ☐ Threaten Litigation ☐ Judgment (check one)

1. Against ☐ Proposer; ☐ Principal; ☐ Both (check as appropriate)
2. Name of Litigation/Judgment: _____
3. Case Number: _____
4. Court of Jurisdiction: _____
5. Please provide a statement describing the size and scope of the pending/threaten litigation or judgment (use additional page if necessary):

_____

B. ☐ Pending Litigation ☐ Threaten Litigation ☐ Judgment (check one)

1. Against ☐ Proposer; ☐ Principal; ☐ Both (check as appropriate)
2. Name of Litigation/Judgment: _____
3. Case Number: _____
4. Court of Jurisdiction: _____
5. Please provide a statement describing the size and scope of the pending/threaten litigation or judgment (use additional page if necessary):

_____

Signature of Proposer: Jeanne Cooper **Date:** June 27, 2008

FORM PW-16

Statement of Equipment

THIS PAGE IS TO BE COMPLETED BY PROPOSER AND SUBMITTED TO THE COUNTY OF LOS ANGELES DEPARTMENT OF PUBLIC WORKS

PROPOSER'S NAME ShelterCLEAN, INC.

ADDRESS 2514 North Naomi Street, Burbank, CA 91504

TELEPHONE 818 846 1300

STATE BELOW THE INFORMATION FOR ALL EQUIPMENT AVAILABLE

One item per line; do not submit an equipment list in your own format. Form may be reproduced in order to list all equipment

TYPE OF EQUIPMENT	MAKE AND EQUIPMENT YOU ARE OFFERING	MODEL	YEAR	SERIAL NUMBER
VEHICLE #187	FORD	F250 P/U	1998	XKA31949
VEHICLE #206	FORD	F150 P/U	2003	3KA58322
VEHICLE #207	FORD	F150 P/U	2003	3NA44820
VEHICLE #208	FORD	F150 P/U	2003	3NB29413
VEHICLE #210	FORD	F150 P/U	2003	RF17273K
VEHICLE #211	FORD	F150 P/U	2003	3NA87637
VEHICLE #212	FORD	RANGER P/U	2003	YR10U63P
VEHICLE #217	FORD	F250 P/U	2001	1EA67317
VEHICLE #229	FORD	F150 P/U	2004	4CA42370
VEHICLE #236	FORD	F150 P/U	2004	4CA59191
VEHICLE #237	FORD	RANGER P/U	2004	4PB15837

REMARKS: _____

FORM PW-16

Statement of Equipment

THIS PAGE IS TO BE COMPLETED BY PROPOSER AND SUBMITTED TO THE COUNTY OF LOS ANGELES DEPARTMENT OF PUBLIC WORKS

PROPOSER'S NAME ShelterCLEAN, INC.

ADDRESS 2514 North Naomi Street, Burbank, CA 91504

TELEPHONE 818.846.1300

STATE BELOW THE INFORMATION FOR ALL EQUIPMENT AVAILABLE

One item per line; do not submit an equipment list in your own format. Form may be reproduced in order to list all equipment

TYPE OF EQUIPMENT	MAKE AND EQUIPMENT YOU ARE OFFERING	MODEL	YEAR	SERIAL NUMBER
VEHICLE #241	FORD	F150 P/U	2004	4CA36256
VEHICLE #248	FORD	F150 P/U	2006	8A78094
VEHICLE #252	FORD	F150 P/U	2006	8E10524
VEHICLE #253	FORD	F150 P/U	2006	8E10528
VEHICLE #239	FORD	F350 FLATBED	2004	4EC01027
PRESSURE WASHER	LANDA	PGHW4-3500	2004	PO704-85848

REMARKS: _____

P:\aapub\CONTRACT\BEN\TRANSITSTOP NORTH & SOUTH\2006 SOUTH REBID\RFP\4.4 EQUIPMENT FORM PW-16.DOC

----NOT APPLICABLE----

FORM LW-2

COUNTY OF LOS ANGELES LIVING WAGE PROGRAM

APPLICATION FOR EXEMPTION

The contract to be awarded pursuant to the RFP is subject to the County of Los Angeles Living Wage Program (Program) (Los Angeles County Code, Chapter 2.201). Contractors and subcontractors may apply individually for consideration for an exemption from the Program. **To apply, complete and submit this form to Public Works seven days prior to the due date for proposals.** Upon review of the submitted Application for Exemption, Public Works will determine, in its sole discretion, whether the contractor and/or subcontractor is/are exempt from the Program.

Company Name: ShelterCLEAN, Inc			
Company Address: 2514 N. Naomi St.			
City:	State:	Zip Code:	
Telephone Number: Burbank	Facsimile Number: CA	Email Address: 91504	
Awarding Department:		Contract Term:	
Type of Service:			
Contract Dollar Amount:		Contract Number (if any):	

I am requesting an exemption from the Program for the following reason(s) (*attach to this form all documentation that supports your claim* and *SUBMIT SEVEN DAYS PRIOR TO THE DEADLINE FOR SUBMISSION OF PROPOSALS TO PUBLIC WORKS OR FAX TO (626) 458-4194*):

- ☐ My business is a nonprofit corporation qualified under Internal Revenue Code Section 501(c)(3) *(you must attach the IRS Determination Letter)*.
- ☐ My business is a Small Business *(as defined in the Living Wage Ordinance--you must attach your company's two most recent tax year returns and last state payroll tax return)* which is not an affiliate or subsidiary of a business dominant in its field of operation AND during the contract period will have 20 or fewer full- and part-time employees; AND
  - ☐ Has less than $1 million in annual gross revenues in the preceding fiscal year including the proposed contract amount; OR
  - ☐ Is a technical or professional service that has less than $2.5 million in annual gross revenues in the preceding fiscal year including the proposed contract amount.
- ☐ My business has received an aggregate sum of less than $25,000 during the preceding 12 months under one or more Proposition A contracts and/or cafeteria services contracts, including the proposed contract amount.

FORM LW-2 - APPLICATION FOR EXEMPTION (continued)

☐ My business is subject to a bona fide Collective Bargaining Agreement *(you must attach the agreement)*; AND

- ☐ the Collective Bargaining Agreement expressly provides that it supersedes all of the provisions of the Living Wage Program; OR
- ☐ the Collective Bargaining Agreement expressly provides that it supersedes the following specific provisions of the Living Wage Program (I will comply with all provisions of the Living Wage Program not expressly superseded by my business - Collective Bargaining Agreement):

_____

_____

_____

I declare under penalty of perjury under the laws of the State of California that the information herein is true and correct.

APPLICATION FOR EXEMPTION WILL NOT APPLY TO OUR COMPANY

PRINT NAME: Alan Mudge	TITLE: General Manager
SIGNATURE:	DATE: June 27, 2008

Additional Information

The additional information requested below is for information purposes only. It is not required for consideration of this Application for Exemption. The County will not consider or evaluate the information provided below by Contractor, in any way whatsoever, when recommending selection or award of a contract to the Board of Supervisors.

☐ **Either the contractor or the employees' collective bargaining unit have** a bona fide health care benefit plan for those employees who will be providing services to the County under the contract.

Health Plan Company Name(s): _____

Company Insurance Group Number(s): _____

Health Premium Amount Paid by Employer: _____

Health Premium Amount Paid by Employee: _____

Health Benefit(s) Payment Schedule:

☐ Monthly ☐ Quarterly ☐ Bi-Annual

☐ Annually ☐ Other (Specify): _____

☐ **Neither the contractor nor the employees' collective bargaining unit** have a bona fide health care benefit plan for those employees who will be providing services to the County under the contract.

FORM LW-3

COUNTY OF LOS ANGELES
LIVING WAGE ORDINANCE

Contractor Living Wage Declaration

The contract to be awarded pursuant to this Request for Proposals (RFP) is subject to the County of Los Angeles Living Wage Ordinance (Program). You must declare your intent to comply with the Program.

If you believe that you are exempt from the Program, please complete the Application for Exemption form and submit it, as instructed in the RFP, to Public Works before the deadline to submit proposals.

If you are not exempt from the Program, please check the option that best describes your intention to comply with Program.

☐ I do not have a bona fide health care benefit plan for those employees who will be providing services to the County under the contract. I will pay an hourly wage of not less than $11.84 per hour per employee.

☐ XX I do have a bona fide health care benefit plan for those employees who will be providing services to the County under the contract but will pay into the plan less than $2.20 per hour per employee. I will pay an hourly wage of not less that $11.84 per hour per employee.

☐ I do have a bona fide health care benefit plan for those employees who will be providing services to the County under the contract and will pay into the plan at least $2.20 per hour per employee. I will pay an hourly wage of not less than $9.64 per hour per employee.

Health Plan(s): KAISER FOUNDATION HEALTHPLAN

Company Insurance Group Number: 227527

Health Benefit(s) Payment Schedule:

☐ XX Monthly ☐ Quarterly ☐ Bi-Annual

☐ Annually ☐ Other: _____ (Specify)

PLEASE PRINT COMPANY NAME: ShelterCLEAN, Inc.	
I declare under penalty of perjury under the laws of the State of California that the above information is true and correct:	
SIGNATURE: Pamela Garvin	DATE: June 27, 2008
PLEASE PRINT NAME: Pamela Garvin	TITLE OR POSITION: Controller

P:\ASPUB\CONTRACT\MASTER\LWDECLARATION.DOC Rev. PW 02/13/07

FORM LW-4

COUNTY OF LOS ANGELES LIVING WAGE PROGRAM
ACKNOWLEDGMENT AND STATEMENT OF COMPLIANCE

The undersigned individual is the owner or authorized agent of the business entity or organization (Firm) identified below and makes the following statements on behalf of his or her Firm. **CHECK EACH APPLICABLE BOX.**

LIVING WAGE ORDINANCE:

☒ I have read the County's Living Wage Ordinance (Los Angeles County Code Section 2.201.010 through 2.201.100), and understand that the Firm is subject to its terms.

CONTRACTOR NON-RESPONSIBILITY AND CONTRACTOR DEBARMENT ORDINANCE:

☒ I have read the provisions of the RFP describing the County's Determinations of Contractor Non-Responsibility and Contractor Debarment Ordinance (Los Angeles County Code Section 2.202.010 through 2.202.060), and understand that the Firm is subject to its terms.

LABOR LAW/PAYROLL VIOLATIONS :

A "Labor Law/Payroll Violation" includes violations of any Federal, State, or local statute, regulation, or ordinance pertaining to wages, hours, or working conditions such as minimum wage, prevailing wage, living wage, the Fair Labor Standards Act, employment of minors, or unlawful employment discrimination.

History of Alleged Labor Law/Payroll Violations (Check One):

☐ The Firm **HAS NOT** been named in a complaint, claim, investigation or proceeding relating to a alleged Labor Law/Payroll Violation which involves an incident occurring within three years of the date of the proposal; **OR**

☒ The Firm **HAS** been named in a complaint, claim, investigation, or proceeding relating to a alleged Labor Law/Payroll Violation which involves an incident occurring within three years of the date of the proposal. (I have attached to this form the required Labor/Payroll/Debarment History form with the pertinent information for each allegation.)

History of Determinations of Labor Law/Payroll Violations (Check One):

☒ There **HAS BEEN NO** determination by a public entity within the three years of the date of the proposal that the Firm committed a Labor Law/Payroll Violation; **OR**

☐ There **HAS BEEN** a determination by a public entity within the three years of the date of the proposal that the Firm committed a Labor/Payroll Violation. I have attached to this form the required Labor/Payroll/Debarment History form with the pertinent information for each violation (including each reporting entity name, case number, name and address of claimant, date of incident, date claim opened, and nature and disposition of each violation or finding.) (The County may deduct points from the proposer's final evaluation score ranging from 1% to 20% of the total evaluation points available with the largest deductions occurring for undisclosed violations.)

HISTORY OF DEBARMENT (Check one):

☒ The Firm **HAS NOT** been debarred by any public entity during the past ten years; **OR**

☐ The Firm **HAS** been debarred by a public entity within the past ten years. Provide the pertinent information (including each public entity's name and address, dates of disbarment, and nature of each debarment) on the attached Labor/Payroll/Debarment History form.

I declare under penalty of perjury under the laws of the State of California that the above is true, complete and correct.

Pamela Garvin	Pamela Garvin, Controller
Owner's/Agent's Authorized Signature	**Print Name and Title**
ShelterCLEAN, Inc.	June 27, 2008
Print Name of Firm	**Date**

FORM LW-5

COUNTY OF LOS ANGELES
LIVING WAGE PROGRAM
LABOR/PAYROLL/DEBARMENT HISTORY

The Firm must complete and submit a separate form (make photocopies of form) for each instance of (check the applicable box below):

XX An alleged claim, investigation, or proceeding relating to an alleged Labor Law/Payroll Violation for an incident occurring within the past three years of the date of the proposal.

☐ A determination by a public entity within three years of the date of the proposal that the Firm committed a Labor Law/Payroll Violation.

☐ A debarment by a public entity listed below within the past ten years.

Print Name of Firm: ShelterCLEAN, Inc.	Print Name of Owner:
Print Address of Firm: 2514 N. Naomi St.	Owner's/AGENT's Authorized Signature:
City, State, Zip Code: Burbank, CA 91504	Print Name and Title: Pamela Garvin, Controller

Public Entity Name	Department of Fair Employment and Housing
Public Entity Address:	Street Address: 611 W. Sixth St., St. 1500
	City, State, Zip: Los Angeles, CA 90017
Case Number/Date Claim Opened:	Case Number: E200506S0509-00-PE
	Date Claim Opened: September 2005
Name and Address of Claimant:	Name: JOSE GUILLERMO MORENO
	Street Address: 3024 N. GAGE AVE
	City, State, Zip: EL MONTE, CA 91731
Description of Work: (e.g., Janitorial) BUS STOP SHELTER JANITORIAL CLEANING AND MINOR REPAIRS	
Description of Allegation and/or Violation:	MR. MORENO ALLEGED HE WAS NOT GIVEN A RAISE DUE TO HIS WORK RELATED INJURY
Disposition of Finding: (attach disposition letter) (e.g., Liquidated Damages, Penalties, Debarment, etc.)	THE 'DFEH' FOUND NO BASIS FOR COMPLAINT

XX ☐ Additional Pages are attached for a total of 3 pages.

STATE OF CALIFORNIA · STATE AND CONSUMER SERVICES AGENCY
DEPARTMENT OF FAIR EMPLOYMENT & HOUSING
611 West Sixth Street, Suite 1500, Los Angeles, CA 90017
(213) 439-6799 (800) 700-2320 Fax (213) 439-6
ARNOLD SCHWARZENEGGER, Governor

July 12, 2006

JOSE G. MORENO
3024 N. Gage Ave.
El Monte, CA 91731

RE: E200506S0509-00-pe/37AA510512
MORENO/SHELTER CLEAN

Dear JOSE G. MORENO:

NOTICE OF CASE CLOSURE

The consultant assigned to handle the above-referenced discrimination complaint that was filed with the Department of Fair Employment and Housing (DFEH) has recommended that the case be closed on the basis of: No Probable Cause To Prove A Violation Of The Statute.

Please be advised that this recommendation has been accepted and the case has been closed effective July 11, 2006.

This letter is also your Right-To-Sue Notice. According to Government Code section 12965, subdivision (b), a civil action may be brought under the provisions of the Fair Employment and Housing Act against the person, employer, labor organization or employment agency named in the above-referenced complaint. This is also applicable to DFEH complaints that are filed under, and allege a violation of Government Code section 12948 which incorporates Civil Code sections 51, 51.7, and 54. The civil action must be filed within one year from the date of this letter. However, if your civil complaint alleges a violation of Civil Code section 51, 51.7 or 54, you should consult an attorney about the applicable statutes of limitation. If you signed a settlement agreement resolving your complaint, it is likely that you have waived your right to file a private lawsuit.

This case may be referred to the U.S. Equal Employment Opportunity Commission for further review. If so, pursuant to Government Code section 12965, subdivision (d)(1), your right to sue will be tolled during the pendency of EEOC's review of your complaint.

The Department of Fair Employment and Housing does not retain case files beyond three years after a complaint is filed, unless the case is still open at the end of the three-year period.

Sincerely,

Lottie Woodruff
District Administrator

cc: Case File

Taylor S. Ball
Attorney
SHELTER CLEAN
11377 West Olympic Blvd.
Los Angeles, CA 90064

FORM LW-5

COUNTY OF LOS ANGELES
LIVING WAGE PROGRAM
LABOR/PAYROLL/DEBARMENT HISTORY

The Firm must complete and submit a separate form (make photocopies of form) for each instance of (check the applicable box below):

XX An alleged claim, investigation, or proceeding relating to an alleged Labor Law/Payroll Violation for an incident occurring within the past three years of the date of the proposal.

☐ A determination by a public entity within three years of the date of the proposal that the Firm committed a Labor Law/Payroll Violation.

☐ A debarment by a public entity listed below within the past ten years.

Print Name of Firm: ShelterCLEAN, Inc.	Print Name of Owner:
Print Address of Firm: 2514 N. Naomi St.	Owner's/AGENT's Authorized Signature:
City, State, Zip Code: Burbank, CA 91504	Print Name and Title: Pamela Garvin, Controller

Public Entity Name	U.S. Equal Employment Opportunity Commission
Public Entity Address:	**Street Address:** 255 E. Temple St., 4th Floor
	City, State, Zip: Los Angeles, CA 90012
Case Number/Date Claim Opened:	**Case Number:** 37A-2005-10512
	Date Claim Opened: September 2005
Name and Address of Claimant:	**Name:** JOSE GUILLERMO MORENO
	Street Address: 3024 N. GAGE AVE
	City, State, Zip: EL MONTE, CA 91731
Description of Work: (e.g., Janitorial) BUS STOP SHELTER JANITORIAL CLEANING AND MINOR REPAIRS	
Description of Allegation and/or Violation:	MR. MORENO ALLEGED HE WAS DISCRIMINATED AGAINST DUE TO HIS WORK RELATED INJURY BY NOT BEING GIVEN A PAY INCREASE.
Disposition of Finding: (attach disposition letter) (e.g., Liquidated Damages, Penalties, Debarment, etc.)	THE 'EEOC' AGREED THERE WAS NO BASIS FOR THE COMPLAINT AND ADOPTED THE FINDINGS OF THE 'DFEH'. THE COMPLAINT WAS DISMISSED

XX ☐ Additional Pages are attached for a total of 2 pages.

EEOC Form 161 (3/98)

U.S. EQUAL EMPLOYMENT OPPORTUNITY COMMISSION

DISMISSAL AND NOTICE OF RIGHTS

To: Jose G. Moreno
3024 N. Gage Ave.
El Monte, CA 91731

From: Los Angeles District Office - 480
255 E. Temple St. 4th
Los Angeles, CA 90012

☐ On behalf of person(s) aggrieved whose identity is CONFIDENTIAL (29 CFR §1601.7(a))

EEOC Charge No.	EEOC Representative	Telephone No.
37A-2005-10512	Legal Officer of the Day	(213) 894-1000

THE EEOC IS CLOSING ITS FILE ON THIS CHARGE FOR THE FOLLOWING REASON:

- ☐ The facts alleged in the charge fail to state a claim under any of the statutes enforced by the EEOC.
- ☐ Your allegations did not involve a disability as defined by the Americans With Disabilities Act.
- ☐ The Respondent employs less than the required number of employees or is not otherwise covered by the statutes.
- ☐ Your charge was not timely filed with EEOC; in other words, you waited too long after the date(s) of the alleged discrimination to file your charge
- ☐ Having been given 30 days in which to respond, you failed to provide information, failed to appear or be available for interviews/conferences, or otherwise failed to cooperate to the extent that it was not possible to resolve your charge.
- ☐ While reasonable efforts were made to locate you, we were not able to do so.
- ☐ You were given 30 days to accept a reasonable settlement offer that affords full relief for the harm you alleged.
- ☐ The EEOC issues the following determination: Based upon its investigation, the EEOC is unable to conclude that the information obtained establishes violations of the statutes. This does not certify that the respondent is in compliance with the statutes. No finding is made as to any other issues that might be construed as having been raised by this charge.
- ☒ The EEOC has adopted the findings of the state or local fair employment practices agency that investigated this charge.
- ☐ Other *(briefly state)*

- NOTICE OF SUIT RIGHTS -

(See the additional information attached to this form.)

Title VII, the Americans with Disabilities Act, and/or the Age Discrimination in Employment Act: This will be the only notice of dismissal and of your right to sue that we will send you. You may file a lawsuit against the respondent(s) under federal law based on this charge in federal or state court. Your lawsuit must be filed WITHIN 90 DAYS of your receipt of this notice; or your right to sue based on this charge will be lost. (The time limit for filing suit based on a state claim may be different.)

Equal Pay Act (EPA): EPA suits must be filed in federal or state court within 2 years (3 years for willful violations) of the alleged EPA underpayment. This means that backpay due for any violations that occurred more than 2 years (3 years) before you file suit may not be collectible.

On behalf of the Commission

Enclosures(s)

Olophius E. Perry,
District Director

Aug. 3, 2006
(Date Mailed)

cc: Executive Officer, on behalf of
SHELTER CLEAN
2514 Naomi Street
Burbank, CA 91504

FORM LW-6

GUIDELINES FOR ASSESSMENT OF PROPOSER LABOR LAW/PAYROLL VIOLATIONS

COUNTY DETERMINATION	RANGE OF DEDUCTION_____ (Deduction is taken from the maximum evaluation points available)
Proposer Name: ShelterCLEAN, INC. Contracting Department: _____ Department Contact Person: _____ Phone: _____	

	Proposer Fully Disclosed	Proposer *Did Not* Fully Disclose
MAJOR County determination, based on the Evaluation Criteria, that proposer has a record of very serious violations.*	8 - 10% Consider investigating a finding of proposer non-responsibility**	16 - 20% Consider investigating a finding of proposer non-responsibility**
SIGNIFICANT County determination, based on the Evaluation Criteria, that proposer has a record of significant violations.*	4 - 7%	8 - 14% Consider investigating a finding of proposer non-responsibility**
MINOR County determination, based on the Evaluation Criteria, that proposer has a record of relatively minor violations.*	2 - 3%	4 - 6%
INSIGNIFICANT County determination, based on the Evaluation Criteria, that proposer has a record of very minimal violations.*	0 - 1%	1 - 2%
NONE County determination, based on the Evaluation Criteria, that proposer does not have a record of violations.*	0	N/A

Assessment Criteria

* A 'Labor Law/Payroll Violation' includes violations of any Federal, State or local statute, regulation or ordinance pertaining to wages, hours, working conditions such as minimum wage, prevailing wage, living wage, the Fair Labor Standards Act, employment of minors, or unlawful employment discrimination. The County may deduct points from a proposer's final evaluation score only for Labor Law/Payroll Violations with disposition by a public entity within the past three years of the date of the proposal.

The assessment and determination of whether a violation is major, significant, minor, or insignificant and the assignment of a percentage deduction shall include, but not be limited to, consideration of the following criteria and variables:

- Accuracy in self-reporting by proposer
- Health and/or safety impact
- Number of occurrences
- Identified patterns in occurrences
- Dollar amount of lost/delayed wages
- Assessment of any fines and/or penalties by public entities
- Proportion to the volume and extent of services provided, e.g., number of contracts, number of employees, number of locations, etc.

** County Code Title 2, Chapter 2.202.030 sets forth criteria for making a finding of contractor non-responsibility which are not limited to the above situations.

FORM LW-7

REQUESTED INFORMATION ON THE PROPOSER'S MEDICAL PLAN COVERAGE

Proposer: ShelterCLEAN, Inc.

Name of Proposer's Health Plan: Kaiser Foundation Healthplan **Date:** June 27, 2008

(Please use a separate form for each health plan offered by the proposer to employees who will be working under this contract.)

ITEMS	DOES THE PLAN COVER? (YES) (NO)	WHAT DOES THE PROPOSER OR PROPOSER'S PLAN PAY?	LIST ANY CO-PAYMENTS AND/OR COMMENTS
Proposer's Health Plan Premium			
Employee only	Y N	$ 288.39	DEPENDENT COVERAGE
Employee + 1 dependent	Y N $634.46	$ --0--	OPTIONAL AT EMPLOYEE
Employee + 2 dependents	Y N $519.10	$ --0--	EXPENSE. PRICE EFFECTIVE 7/1/08
Employee + 3 dependents	Y N 894.01	$ --0--	
Proposer's portion of above health premium payment			
Employee only	Y N	$ 288.39	PREMIUM BALANCE IS
Employee + 1 dependent	Y N	$ 288.40	EMPLOYEE'S EXPENSE
Employee + 2 dependents	Y N	$	
Employee + 3 dependents	Y N	$	
Any Annual Deductible?			
Per Person	Y N	$	
Per Family	Y N	$	
Any Annual Maximum Employee Out-of-Pocket Expense?			ANNUAL CO-PAY(S)
Per Person	Y N	$	$1500.00
Per Family	Y N	$	$3000.00
Any Lifetime Maximum?			
Per Person	Y N	$	
Per Family	Y N	$	
Ambulance coverage	Y N	$	$50.00 PER TRIP
Doctor's Office Visits	Y N	$	CO-PAY $30.00 PER VISIT
Emergency Care	Y N	$	$50.00 PER VISIT
Home Health Care	Y N	$	No Charge to 100 visits pf 2 hr. each per year
Hospice Care	Y N	$	NO CHARGE
Hospital Care	Y N	$	CO-PAY $100. PER ADMISSION
Immunizations	Y N	$	NO CHARGE
Maternity	Y N	$	NO CHARGE
Mental Health	Y N	$	Co-Pay $30.00 Per Visit/Individual Co-Pay $15.00 Per Visit/Group
Mental Health In-Patient Coverage	Y N	$	Co-Pay $100.00 Per Admission/30 days Per Year

LW-7 – PROPOSER'S MEDICAL PLAN COVERAGE (continued)

ShelterCLEAN, Inc.

ITEMS	DOES THE PLAN COVER? (YES) (NO)	WHAT DOES THE PROPOSER OR PROPOSER'S PLAN PAY?	LIST ANY CO-PAYMENTS AND/OR COMMENTS
Mental Health Out-Patient Coverage	Y N	$	Co-Pay $15. Or $30. Per Visit to 40 Visit Maximum Per Year
Physical Therapy	Y N	$	CO-PAY $30.00 PER VISIT
Prescription Drugs	Y N	$	Co-Pay: 10,20,30,60,90 day supply ~~$10-$90/Generic or Brandy Islas~~
Routine Eye Examinations	Y N	$	
Skilled Nursing Facility	Y N	$	No Charge to 100 Days
Surgery	Y N	$	Co-Pay $100.00 Per Admission
X-Ray and Laboratory	Y N	$	NO CHARGE

Under this health plan, a full time employee:

☒ Becomes eligible for health insurance coverage after 90 days of employment.

☐ is defined as an employee who is employed more than ___ hours per week.

OTHER BENEFITS:

A.NUMBER OF PAID SICK DAYS EARNED IN THE FIRST YEAR OF EMPLOYMENT IS 5 DAYS.

B.NUMBER OF PAID SICK DAYS EARNED IN THE SECOND YEAR OF EMPLOYMENT IS 5 DAYS.

C.NUMBER OF PAID VACATION DAYS EARNED IN THE FIRST YEAR OF EMPLOYMENT IS 7 DAYS.

D.NUMBER OF PAID VACATION DAYS EARNED IN THE SECOND YEAR OF EMPLOYMENT IS 10 DAYS.

E.NUMBER OF PAID HOLIDAYS PER YEAR IS ** DAYS.

**LA COUNTY CONTRACT WORKERS RECEIVE 11 DAYS

NON-LA COUNTY CONTRACT WORKERS RECEIVE 8

Transit Maintenance
ShelterCLEAN

THE COST METHODOLOGY & FUEL PURCHASE STATEMENT

Cost Methodology Summary

The COST METHODOLOGY chart (LW-8) that follows shows a total annual price that includes the routine maintenance and all the bus stop amenities activity in South County areas that is estimated on the PW-2 forms. The total annual cost matches the total annual costs on the PW-2 Schedule of Prices and does not reflect the maintenance and trash collection prices only, which as stand-alone services would be substantially lower without all the amenities activity costs.

The cost for procurement, installation, removal, relocation, and reinstallation is included on "Service and Supply Costs" lines of the sheets. The line also includes disposable supplies and materials used for routine maintenance. There are no additional employee labor hours listed as we use existing staff, primarily field supervisors, repair technicians, and shift leaders to perform the additional services during normal shift hours.

Fuel Purchase Statement

ShelterCLEAN purchases its' fuel at market price.

FORM LW-8

METHODOLOGY FOR CONTRACT: MAINTENANCE PROGRAM FOR NONADV. BUSTOP AMENITIES-SOUTH COUNTY

PROPOSER: ShelterCLEAN, Inc.

POSITION/TITLE* (LIST EACH EMPLOYEE SEPARATELY)	HOURS PER DAY							HOURS	ANNUAL	HOURLY	ANNUAL
	SUN	MON	TUE	WED	THU	FRI	SAT	PER WK	HOURS	WAGE	COST
ROUTE SPECIALIST		8	8	8	8	8		40	1928	$ 12.02	$ 23,169.93
ROUTE SPECIALIST		8	8	8	8	8		40	1928	$ 12.02	$ 23,169.93
ROUTE SPECIALIST		8	8	8	8	8		40	1928	$ 12.02	$ 23,169.93
ROUTE SPECIALIST		8	8	8	8	8		40	1928	$ 12.02	$ 23,169.93
ROUTE SPECIALIST		8	8	8	8	8		40	1928	$ 12.02	$ 23,169.93
ROUTE SPECIALIST		8	8	8	8	8		40	1928	$ 12.02	$ 23,169.93
ROUTE SPECIALIST		8	8	8	8	8		40	1928	$ 12.02	$ 23,169.93
SHIFT LEADER/REPAIR TECH		8	8	8	8	8		40	1928	$ 12.02	$ 23,169.93
PRESSURE WASH OPERATOR		3	3	3	3	3		15	742	$ 13.00	$ 9,643.53
FIELD SUPERVISOR		8	8	8	8	8		40	1928	$ 15.00	$ 28,920.00
OFFICE ASSISTANT/DATA ENTRY		4	4	4	4	4		20	997	$ 15.00	$ 14,958.75

COMMENTS/NOTES:

ANNUAL HOURS CALCULATED EXCLDUING VACATION, SICK, AND HOLIDAYS
PRESSURE WASH OPERATOR HOURS APPORTIONED BETWEEN LACO, AND OTHER CONTRACTS.
OFFICE ASSISTANT HOURS APPORTIONED BETWEEN LACO, AND OTHER PROJECTS.
ALL EMPLOYEES ARE FULL-TIME.

Total Annual Salaries	$ 241,739.81
(1) Vacations, Sick Leave, Holiday†	$ 21,967.14
(2) Health Insurance**	$ 31,691.16
(3) Payroll Taxes & Workers' Compensation	$ 53,968.74
(4) Welfare & Pension	$ 7,252.19
Total Annual Employee Benefits (1+2+3+4)	$ 114,879.23
(5) Equipment Costs	$ 103,612.75
(6) Service and Supply Costs	$ 395,776.36
(7) General and Administrative Costs	$ 24,553.31
(8) Profit	$ 88,056.15
Total Annual Other Costs (5+6+7+8)	$ 611,998.56
TOTAL ANNUAL PRICE	$ 968,617.60

*All employees shown must be FULL-TIME employees of the proposer, unless exemption to use Part-Time employees has been granted by the County.
**Minimum cost for health insurance is $2.20/hour if hourly wage is between $9.64 and $11.84, unless exemption from Living Wage requirements has been granted by the County.

This cost methodology is to show, in detail, how the Proposer arrived at the proposed contract price. This methedology is to reflect employee classificiations to be used (e.g. landscape maintenance laborer, working supervisor, etc.); hours to be worked.
The above information was compiled from records that are available to me at this time and I declare under penalty of perjury that the information is true and accurate within the requirements of the proposal.

ShelterCLEAN, Inc.
Name of Proposer

Signature V.P.

7/9/08
Date

P:\CONTRACTS\REVISEDCOSTMETHODOLOGY.XLS

Record Keeping

1. TRACKING HOURS WORKED

1. 1. How does the Proposer track employee hours actually worked?

SCI- Employee's hours are tracked with an electronic biometric hand reader type time clock near the entry door of each facility. This time clock works in conjunction with an automated payroll software system.

1.2. Where do firm's employees report to work at the beginning of their shift? At the work location or a central site with travel to the worksite?

SCI-ShelterCLEAN, Inc. employees report to work at one of two company offices that they are permanently assigned to, either Burbank or Signal Hill.

1.3. If the latter is firm's practice/process, when does the firm consider the employees' shift to have started? At a central site or upon arrival at the work location?

SCI-ShelterCLEAN, Inc. employees shift starts at the office to which they are assigned.

2. REPORTING TIME

How does firm know employees actually reported to work and at what time? For example, sign-in sheets, computerized check in, call-in system, or some other method.

SCI-Each location is equipped with an electronic biometric hand reader type time clock near the entry door.

Each employee is responsible for time punch on arrival and shift end departure.

Supervisors are available to make corrections if an employee forgets to punch in and/or out. There is a company generated dated sheet at the hand reader time clock to record all exceptions to the time record(s). Supervisors also hand out the day's assignment and any necessary supplies.

* Time System Exception Sheet attached*

3. RECORDS OF ACTUAL TIME WORKED

3.1. What records are created to document the beginning and ending times of employee's actual work shifts?

SCI-ShelterCLEAN, Inc. utilizes an electronic biometric hand reader style time clock to document employee shift start and shift end times.

3.2. What records are maintained by the firm of actual time worked?

SCI-Each employee is assigned a unique identification number that they enter into the hand reader prior to hand placement on the unit to record time in and time out. The information is electronically collected and posted to time sheets that are part of the computer software.

3.3. Are the records maintained daily or at another interval (indicate the interval)?

SCI-Time is electronically posted each day and timesheets generate one week at a time based on company's pay week.

3.4. Who creates these records (e.g., employee, supervisor, or office staff?

SCI-The employees create the original timesheet documents by time in and time out recording.

3.5. Who checks the records and what are they checking for?

SCI-The timesheets are edited by payroll department for accuracy. The payroll department must manually record exceptions such as vacation hours, sick time hours, and holiday hours and/or time in and/or out if the employee forgot to record their shift start and/or shift end.

3.6. What happens to these records?

SCI-The computer software maintains the records for two years and then the data is downloaded to an external back up device held by the user.

3.7. Are they used as a source document to create firm's payroll?

SCI-When the timesheets are complete and each employee's time is accounted for, the timesheet record is electronically transferred to a payroll company for check generation and direct deposits.

3.8. <u>ATTACH ACTUAL COPIES OF THESE RECORDS</u>

SCI-A copy of a time record and check with stub is attached.

4. OTHER RECORDS USED TO CREATE PAYROLL

4.1. If the records of actual time worked are not used to create payroll, what is the source document that is used?

SCI-N/A-This is not applicable due to the fact that our records are the source documents for payroll.

4.2. Who prepares and who checks the source document?

SCI-N/A-This is not applicable due to the fact that our records are the source documents for payroll.

4.3. Does the employee sign it?

SCI-N/A-This is not applicable due to the fact that our records are the source documents for payroll.

4.4. Who approves the source document, and what do they compare it with prior to approving the source document?

SCI-N/A-This is not applicable due to the fact that our records are the source documents for payroll.

5. BREAKS

5.1. How does the firm know that employees take mandated breaks and meal breaks (periods)?

SCI- ShelterCLEAN, Inc. Company Policy and Employee Handbook both remark on the importance of breaks and the meal break during the course of a shift. Because most all our employees drive for their job, ShelterCLEAN, Inc. operates on the honor system by which we expect each employee to abide by the rules of our Company policies.

5.2. Does the firm maintain any written supporting documentation to validate that the breaks actually occurred?

SCI- A shift schedule is distributed by the Manager that indicates the approximate time for breaks and meal break for each shift. Each employee is requested to notify the office via the vehicle's two-way radio system that they are taking their meal break. Employee's route assignment sheet has a section for daily time recording, including break times, which the employee is to fill out during the course of their shift. The employee prepares the shift schedule/route sheet document daily.

5.3. If so, who prepares, reviews, and approves such documentation?

SCI- The operations department checks the document primarily to ascertain maintenance issues that need to be addressed. The short break times and lunch break times are not specifically audited.

6. HOW PAYROLL IS PREPARED

6.1. Discuss how the Proposer's payroll is prepared and how the Proposer ensures that employee wages are appropriately paid

SCI-ShelterCLEAN, Inc. utilizes an outside payroll service to generate payroll checks and conduct direct deposit functions based on the employee's request of pay type. Electronic download of biometric time recorded by employees based on their unique identification number to a weekly timesheet that posts by calendar date.

Daily hours worked are posted and listed by straight time, overtime, vacation, sick/personal and audited by internal payroll department for each employee. The only exception is to salaried managers that do not record their time on the electronic system.

A summary sheet is generated to re-verify all hours have posted properly prior to electronic transfer of hours data to the payroll service. After verification of data, the file is electronically transferred to payroll service. The contracted payroll service software verifies data received and creates a file that shows the proposed payroll by each employee. After re-verification of data by internal payroll department, an acceptance code is transmitted to the payroll service to authorize the payroll generation.

6.2. How are employees paid (e.g., manually issued check, cash, automated check, or combination of methods)?

SCI-Payroll checks and Direct Deposit vouchers are generated by the contracted payroll service and distributed at the location to which the employee is permanently assigned. Each payroll check has a stub. If the employee has requested direct deposit, the voucher is distributed with a check stub that has identical information to an actual net check issued, i.e. pay rate(s) hours, etc.

6.3. If by check, do they receive a single check for straight time and overtime or are separate payments made?

SCI-Payroll checks include all earnings for the period combining straight time and overtime. The automated overtime categories calculate overtime at 1.5 times base hour rate and double time is calculated at 2 times base hour rate.

6.4. What information is provided on the check (e.g., deductions for taxes, etc.)?

SCI-A check shows employee name and address and net amount on a preprinted check. The stub shows current and year to date earnings and all deductions by titled category.

6.5. **ATTACH A COPY OF A PAYCHECK AND PAYCHECK STUB THAT SHOWS DEDUCTION CATEGORIES**

SCI-A copy of a payroll direct deposit voucher with payroll check stubs are attached to illustrate the earnings and deduction information provided to each employee.

7. MANUAL PAYROLL SYSTEM

7.1. If the Proposer uses a manual payroll system, describe the steps the person preparing the payroll takes to create a check, starting from the source document through the issuance of a check.

7.2. If the employee has multiple wage rates (i.e., County's Living Wage rate for County work and the firm's standard rate for other non-County work), how does the person preparing the payroll calculate total wages paid?

SCI-ShelterCLEAN, Inc. does not manually generate payroll.

8. AUTOMATED PAYROLL SYSTEM

8.1. If the Proposer uses an automated payroll system or contracts for such automated payroll services to an outside firm, describe the steps taken to prepare the payroll.

SCI-ShelterCLEAN, Inc. contracts an outside payroll service that uses computerized payroll software that compliments the electronic time keeping system each employee uses to record their work hours.

The steps taken to create a payroll are as follows:

- Electronic download of biometric time recorded by employees based on their unique identification number to a weekly timesheet that posts by calendar date.
- Daily hours worked are posted and listed by straight time, overtime, vacation, sick/personal and audited by internal payroll department for each employee. The only exception is to salaried managers that do not record their time on the electronic system.
- A summary sheet is generated to re-verify all hours have posted properly prior to electronic transfer of hours data to the payroll service. After verification of data, the file is electronically transferred to payroll service. The contracted payroll service software verifies data received and creates a file that shows the proposed payroll by each employee. After re-verification of data by internal payroll department, an acceptance code is transmitted to the payroll service to authorize the payroll generation.

8.2. If the employee has multiple wage rates (Le. County's Living Wage rate for County work and the firm's standard rate for other non-County work), how does the automated payroll system calculate total wages paid?

Is the calculation embedded in the software program or does someone have to override the system to perform the calculation?

SCI-ShelterCLEAN, Inc. does not impose multiple wage rates. ShelterCLEAN, Inc. does not distinguish non-county contract work versus county contract work for purposes of determining hourly wage rate. Employees paid the L.A. County living wage earn that same hourly wage rate for all work performed.

9. TRAVEL TIME

9.1. How is travel time during an employee's shift paid?

SCI-N/A-ShelterCLEAN, Inc. does not separate travel time during an employee's shift.

ShelterCLEAN, Inc. employees are considered 'on the clock' daily from the shift start time at their assigned company office until they time stamp at the end of shift.

9.2. At what rate is such travel time paid if the employee has multiple wage rates?

SCI-ShelterCLEAN, Inc. does not impose multiple wage rates

9.3. Discuss how the firm calculates the day's wages for each situation described in the following two examples:

1) During a single shift, an employee works three hours at a work location under a County Living Wage contract, then travels an hour to another work location to work four hours, where they are paid at a different rate than the County's Living Wage rate, and

SCI-N/A. -ShelterCLEAN, Inc. does not separate travel time during an employee's shift.

ShelterCLEAN, Inc. employees are considered 'on the clock' daily from the shift start time at their assigned company office until they time stamp at the end of shift.

2) During a single shift, an employee works three hours at a work location under a County Living Wage contract, then travels an hour to another work location to work four hours, where they are also paid the County's Living Wage rate.

SCI-N/A.-ShelterCLEAN, Inc. does not separate travel time during an employee's shift.

ShelterCLEAN, Inc. employees are considered 'on the clock' daily from the shift start time at their assigned company office until they time stamp at the end of shift.

10. OVERTIME

10.1. How does the firm calculate overtime wages?

SCI-ShelterCLEAN, Inc. adheres to the State of California labor law requiring overtime be calculated at one and a half (1.5) times the base hour rate on hours worked in excess of eight (8) in a day and at two (2) times the base rate on hours worked in excess of twelve (12) in a day.

10.2. What if the employee has multiple wage rates?

SCI-ShelterCLEAN, Inc. does not have multiple wage rates.

DATED: July 9, 2008 PROPOSER'S SIGNATURE: _____

ORIGINAL DOCUMENT IS PRINTED ON CHEMICAL REACTIVE PAPER & HAS A MICROPRINTED BORDER

ShelterClean Inc.
2514 N. Naomi St.
(818) 846-1300
Burbank, CA 91504

Direct Deposit Advice
Check Date: November 08, 2007
Voucher Number: 2149

*** This is not a check ***
VOUCHER

R019 [redacted]

NAME
ADDRESS

Direct Deposit Sample

THE FACE OF THIS DOCUMENT INCLUDES A HIDDEN WORD - DO NOT CASH IF THE WORD VOID IS VISIBLE

ALL CHECK STUBS HAVE Identical INFORMATION

ShelterClean Inc.
2514 N. Naomi St.
(818) 846-1300
Burbank, CA 91504

Earnings Statement

Check Date: November 08, 2007
Period Beginning: October 29, 2007
Period Ending: November 04, 2007

NAME ↓
[redacted]

Employee Number 1043 Department 8810

Voucher Number 2149
Net Pay 522.37
Check Amount

Earnings	Rate	Hours	Amount	YTD Hrs	YTD Amt
ime	20.82	1.20	24.98	12.40	258.17
	13.88	40.00	555.20	1654.10	21600.44
CONTR	0.00		17.41		743.87
HOL				48.00	622.08
MISC				—	100.00
OT1				81.22	1573.04
SICK				24.20	328.72
VAC				64.00	822.08
Total Gross Pay		41.20	580.18	1883.92	25304.53

Taxes	Status	Taxable	Amount	YTD Amt
Medicare		580.18	8.42	366.92
OASDI		580.18	35.97	1568.88
CA SDI - Employee		580.18	3.48	151.83
Federal Income Tax	M/5	580.18	9.94	369.81
California SITW	M/5	580.18		0.02
Total Tax Withholding			57.81	2457.46

Deductions	Amount	YTD Amt
No Deductions		

Direct Deposits	Account	Amount
xxxxx0661	[redacted]	522.37
Total Direct Deposits		522.37

Benefits	Hours	Amount	YTD Hrs	YTD Amt

Accruals	Hours
Sick Hours	21.00
Vacation Hours	68.61

SAFEGUARD LITHO USA 10/07 Y07SF002876M

TIMESYSTEM EXCEPTIONS

DATE: / EMPLOYEE NAME	11/5/07 MONDAY	11/6/07 TUESDAY	11/7/07 WEDNESDAY	11/8/07 THURSDAY	11/9/07 FRIDAY	11/10/07 SATURDAY	11/11/07 SUNDAY
Ricky Romero	A						
Jose Pena	A						
Fernando Morales		A					
Nelson Enriquez			A				

REPORT EMPLOYEES WHEN ABSENT, FORGOT TO PUNCH IN OR OUT, OR SCAN WAS NOT RECOGNIZED

ABSENT=	A
VACATION=	V
FORGOT TO PUNCH IN=	NPI
FORGOT TO PUNCH OUT=	NPO
SCAN FAILED=	SF
ORKED OT, NO PUNCH OUT=	WOT

Sample

ShelterCLEAN, Inc.
2514 N. Naomi St.
Burbank, CA 91504-3235

SHELTERCLEAN, INC.
Report Date: 11/06/2007
Report Time: 14:15:28

Time & Attendance - Employee Timecard Report

10/29/2007 - 11/04/2007

PAY DATE NOV. 8, 2007

1043 [redacted]

Employee ID	1043	DEPARTMENT	8810	Card ID	1043
COMPANY	1	Job Title			
LOCATION	100	Hire Date	04/25/2005		

TIME CARD	Pay Code	IN	IN Ex	OUT	OUT Ex	Reason	Schedule	DEPARTME	Shift/ Pay Expr	Reg Hours	OT-1 - OT-2	Daily Total
10/29/2007 Mon		7:20	E 10	16:06	L 6		(07:30 - 16:00)	8810 - CL	00001-AB	8.00		8.00
10/30/2007 Tue		7:20	E 10	16:19	L 19		(07:30 - 16:00)	8810 - CL	00001-AB	8.00	0.30	8.30
10/31/2007 Wed		7:30*		16:06*	L 6		(07:30 - 16:00)	8810 - CL	00001-AB	8.00		8.00
11/01/2007 Thu		7:19	E 11	16:23	L 23		(07:30 - 16:00)	8810 - CL	00001-AB	8.00	0.40	8.40
11/02/2007 Fri		7:15	E 15	16:31	L 31		(07:30 - 16:00)	8810 - CL	00001-AB	8.00	0.50	8.50

SUMMARY

PayCode	DEPARTMENT	Reg Hours	OT-1 - OT-2	Total Hrs	Earnings	Deductions	Regular Pay Rate	Regular Pay	OT-1 - OT-2 Pay	Total Pay
0 [WKHR]	8810 - CLERICA	40.00	1.20	41.20						
TOTALS		40.00	1.20	41.20						

I CERTIFY THE ABOVE INFORMATION TO BE CORRECT

X _____ _____
Supervisor Signature Date

X _____ _____
Employee Signature Date

ATTACHMENT B

Bid Detail Information

Bid Number : PW-ASD 725
Bid Title : Maintenance Program for Nonadvertising Bus Stop Amenities - South County
Bid Type : Service
Department : Public Works
Commodity : SHELTERS, BUS WAITING
Open Date : 6/12/2008
Closing Date : 6/25/2008 2:00 PM
Bid Amount : $ 900,000
Bid Download : Not Available
Bid Description : PLEASE TAKE NOTICE that Public Works requests proposals for the contract for Maintenance Program for Nonadvertising Bus Stop Amenities Services (2008-PA034). The total annual contract amount of this service is estimated to be $900,000. If not enclosed with this letter, the Request for Proposals (RFP) with contract specifications, forms, and instructions for preparing and submitting proposals may be requested by accessing this link at ftp://dpwftp.co.la.ca.us/solicitationdocuments/nonadsouth.pdf or from Mr. Benjamin Sandoval at (626) 458 7334, Monday through Thursday, 7 a.m. to 5 p.m.

Minimum Requirement(s): Proposers must meet minimum requirements set forth in the RFP document, including, but not limited to, the Proposer or its managing employee must have a minimum of five years' experience in performing the type of services solicited. In addition, copies of the proposer's, employees', and/or subcontractor's active California Class A or B or C61 (D34) contractor's license; and proposer's active Waste Collector Permit issued by the County Department of Public Health must be submitted.

A Proposers' Conference will be held on Wednesday, June 25, 2008, at 2 p.m. at Public Works Headquarters, 900 South Fremont Avenue, Alhambra, California 91803, in Conference Room D. ATTENDANCE BY THE PROPOSER OR AN AUTHORIZED REPRESENTATIVE AT THE CONFERENCE IS MANDATORY. Public Works will reject proposals from those whose attendance at the conference cannot be verified. Attendees should be prepared to ask questions at that time about the specifications, proposal requirements, and contract terms. After the conference, it may be impossible to respond to further requests for information.

The deadline to submit proposals is Wednesday, July 9, 2008, at 5:30 p.m. Please direct your questions to Mr. Sandoval at the number above.

Contact Name : Benjamin Sandoval
Contact Phone# : (626) 458-7334
Contact Email : bsandoval@dpw.lacounty.gov
Last Changed On : 6/12/2008 1:38:35 PM

Back to Last Window