County of Los Angeles
CHIEF EXECUTIVE OFFICE
713 KENNETH HAHN HALL OF ADMINISTRATION
LOS ANGELES, CALIFORNIA 90012
(213) 974-1101
http://ceo.lacounty.gov

WILLIAM T FUJIOKA
Chief Executive Officer

Board of Supervisors
GLORIA MOLINA
First District

YVONNE B. BURKE
Second District

ZEV YAROSLAVSKY
Third District

DON KNABE
Fourth District

MICHAEL D. ANTONOVICH
Fifth District

March 4, 2008

The Honorable Board of Supervisors
County of Los Angeles
383 Kenneth Hahn Hall of Administration
500 West Temple Street
Los Angeles, CA 90012

Dear Supervisors:

DEPARTMENT OF PUBLIC WORKS: MAINTENANCE PROGRAM FOR NONADVERTISING BUS STOP AMENITIES – NORTH COUNTY (SUPERVISORIAL DISTRICT 5) (3 VOTES)

IT IS RECOMMENDED THAT YOUR BOARD:

1. Find that the contract work is categorically exempt from the provisions of the California Environmental Quality Act.

2. Find that this service can be more economically performed by an independent contractor than by County employees.

3. Award the contract for Maintenance Program for Nonadvertising Bus Stop Amenities in the annual sum of $274,270 to Sureteck Industrial and Commercial Services, Inc., located in Ontario, California, and direct the Chair to execute the contract. This contract will be for a period of one year commencing on March 18, 2008, or upon your Board's approval, whichever occurs last, with two 1-year renewal options, not to exceed a total contract period of three years.

4. Authorize the Director of Public Works or his designee to annually increase the contract amount up to an additional 25 percent of the annual contract sum for unforeseen, additional work within the scope of the contract, if required, and fuel cost adjustments in accordance with the contract.

5. Authorize the Director of Public Works or his designee to renew the contract for each additional renewal option if, in the opinion of the Director of Public Works, the contractor has successfully performed during the previous contract period and the services are still required; to approve and execute amendments to incorporate necessary changes within the scope of work; and to suspend work if, in the opinion of the Director of Public Works, it is in the best interest of the County to do so.

PURPOSE/JUSTIFICATION OF RECOMMENDED ACTION

The purpose of the recommended action is to provide maintenance services for nonadvertising bus stop amenities within the unincorporated North County area. The work to be performed will consist of routine cleaning and emptying of trash receptacles, emergency cleaning, repair and maintenance of bus stop shelters and appurtenances, bus benches, trash receptacles, solar light poles, and concrete foundations located at designated transit stops. The Department of Public Works (Public Works) has contracted this service since 2003.

Implementation of Strategic Plan Goals

The Countywide Strategic Plan directs that we provide Service Excellence (Goal 1), Fiscal Responsibility (Goal 4), and Community Services (Goal 6). The contractor, who has the specialized expertise to provide these services accurately, efficiently, timely, and in a responsive and cost-effective manner will support Public Works in meeting these goals.

FISCAL IMPACT/FINANCING

There will be no impact to the County General Fund. This contract is for an annual amount not to exceed $274,270, and may be increased by 25 percent for unforeseen, additional work within the scope of work and fuel cost adjustments in accordance with the contract. This amount is based on the annual price quoted by the contractor.

Financing for this service is available in the Supervisorial District 5 Proposition A Local Return Transit Program included in the Fiscal Year 2007-08 Transit Enterprise Fund Budget and the proposed Fiscal Year 2008-09 Transit Enterprise Fund Budget. Funds to finance the contract's option years will be requested through the annual budget process.

FACTS AND PROVISIONS/LEGAL REQUIREMENTS

The contract has been executed by Sureteck Industrial & Commercial Services, Inc., located in Ontario, California, and approved as to form by County Counsel

(Attachment A). The recommended contract was solicited on an open competitive basis and is in accordance with applicable Federal, State, and County requirements. The contractor is in compliance with the Chief Executive Officer's and your Board's requirements.

The contract contains terms and conditions supporting your Board's ordinances, policies, and programs, including but not limited to: County's Greater Avenues for Independence and General Relief Opportunities for Work Programs (GAIN and GROW), Board Policy No. 5.050; Contract Language to Assist in Placement of Displaced County Workers, Board Policy No. 5.110; Reporting of Improper Solicitations, Board Policy No. 5.060; Notice to Contract Employees of Newborn Abandonment Law (Safely Surrendered Baby Law), Board Policy No. 5.135; Contractor Employee Jury Service Program, Los Angeles County Code, Chapter 2.203; Notice to Employees Regarding the Federal Earned Income Credit (Federal Income Tax Law, Internal Revenue Service Notice 1015); Contractor Responsibility and Debarment, Los Angeles County Code Chapter 2.202; and the Los Angeles County's Child Support Compliance Program, Los Angeles County Code, Chapter 2.200; and the standard Board-directed clauses that provide for contract termination or renegotiation.

Data regarding the proposers' minority participation is on file with Public Works. The contractor was selected upon final analysis and consideration without regard to race, creed, gender, or color.

The recommended contractor is Sureteck Industrial & Commercial Services, Inc. This contract will commence on March 18, 2008, and continue for a period of one year. With your Board's delegated authority, the Director of Public Works may renew the contract for two 1-year renewal options, not to exceed a total contract period of three years.

Proof of the required Comprehensive General and Automobile Liability insurance policies, naming the County as additional insured, and evidence of Workers' Compensation insurance will be obtained from the contractor before any work is assigned.

Pursuant to the applicable memorandum of understanding, the Request for Proposals (RFP) for this contracted service was submitted on October 23, 2007, to the appropriate union for review. The union has not asked to meet with Public Works regarding this solicitation.

This work is being contracted in accordance with procedures authorized under County Charter Section 44.7, Part 3, and Chapter 2.121 (Contracting with Private Business) of the Los Angeles County Code. The mandatory requirements for contracting set forth in County Code Section 2.121.380 have been met.

Since this is a Proposition A contract, Public Works has determined that the contractor complies with the requirements of the Living Wage Program (Los Angeles County Code Chapter 2.201) and agrees to pay its full-time employees providing County services a living wage.

Using methodology approved by the Auditor-Controller, Public Works has calculated the cost-effectiveness of contracting for this service. Based on the cost calculations, Public Works has determined that this service can be more economically performed by an independent contractor than by County employees.

This Proposition A contract does not allow cost-of-living adjustments for the two option years. However, this contract does contain a provision for fuel adjustments on a semiannual basis.

ENVIRONMENTAL DOCUMENTATION

This service is categorically exempt from the provisions of the California Environmental Quality Act (CEQA). This routine maintenance and repair service of nonadvertising bus stop amenities is within a class of projects that has been determined not to have a significant effect on the environment in that it meets the criteria set forth in Section 15301 of CEQA.

CONTRACTING PROCESS

On October 18, 2007, Public Works solicited proposals from 432 independent contractors and community business enterprises to accomplish this work. Also, a notice of the RFP was placed on the County's bid website (Attachment B), and an advertisement was placed in the *Los Angeles Times*.

On November 21, 2007, two proposals were received. The proposals were first reviewed to ensure they met the minimum requirements outlined in the RFP. The proposals, having met these requirements, were then evaluated by an evaluation committee consisting of Public Works staff. The committee's evaluation was based on criteria described in the RFP, which included price, experience, work plan, financial resources, references, demonstrated controls over payroll record keeping, equipment, and staffing plan. Based on this evaluation, it is recommended that this contract be awarded to the highest-rated, responsive, responsible, and lowest cost proposer, Sureteck Industrial & Commercial Services, Inc.

Public Works has accessed available resources to review and assess the proposed contractor's past performance, history of Labor Law violations, and prior performance on County contracts.

IMPACT ON CURRENT SERVICES (OR PROJECTS)

The award of this contract will not result in the displacement of any County employees as this service is presently contracted with the private sector.

CONCLUSION

Please return one adopted copy of this letter, along with the Contractor Execute and Department Conform copies, to the Department of Public Works, Administrative Services Division. The original Board Execute copy should be retained for your files.

Respectfully submitted,

WILLIAM T FUJIOKA
Chief Executive Officer

WTF:DLW
GZ:dw

Attachments (2)

c: County Counsel
Office of Affirmative Action Compliance
Department of Public Works (Programs Development)

ATTACHMENT A

Agreement

BY AND BETWEEN

THE COUNTY OF LOS ANGELES,
DEPARTMENT OF PUBLIC WORKS

AND

SURETECK INDUSTRIAL & COMMERCIAL SERVICES, INC.

FOR

MAINTENANCE PROGRAM FOR NONADVERTISING BUS STOP AMENITIES – NORTH COUNTY

TABLE OF CONTENTS

AGREEMENT FOR MAINTENANCE PROGRAM FOR NONADVERTISING BUS STOP AMENITIES – NORTH COUNTY

PAGE

SAMPLE AGREEMENT 1-4

EXHIBIT A Scope of Work A.1-26

EXHIBIT B Service Contract General Requirements

Section 1 Interpretation of Contract

A. Ambiguities or Discrepancies B.1
B. Definitions B.1
C. Headings B.3

Section 2 Standard Terms and Conditions Pertaining to Contract Administration

A. Amendments B.4
B. Assignment and Delegation B.4
C. Authorization Warranty B.5
D. Budget Reduction B.5
E. Complaints B.5
F. Compliance with Applicable Laws B.6
G. Compliance with Civil Rights Laws B.6
H. Confidentiality B.7
I. Conflict of Interest B.7
J. Consideration of Hiring County Employees Targeted for Layoffs or Reemployment List B.7
K. Consideration of Hiring GAIN and GROW Participants B.8
L. Contractor's Acknowledgment of County's Commitment to Child Support Enforcement B.8
M. Contractor's Charitable Activities Compliance B.8
N. Contractor's Warranty of Adherence to County's Child Support Compliance Program B.9
O. County's Quality Assurance Plan B.9
P. Damage to County Facilities, Buildings, or Grounds B.9
Q. Employment Eligibility Verification B.10
R. Facsimile Representations B.10
S. Fair Labor Standards B.10
T. Governing Laws, Jurisdiction, and Venue B.11
U. Nondiscrimination and Affirmative Action B.11
V. Nonexclusivity B.12
W. No Payment for Services Provided Following Expiration Termination of Contract B.12
X. Notice of Delays B.12
Y. Notice of Disputes B.13
Z. Notice to Employees Regarding the Federal Earned Income Credit B.13
AA. Notices B.13

BB. Publicity B.13
CC. Public Records Act B.14
DD. Record Retention and Inspection/Audit Settlement B.14
EE. Recycled-Content Paper Products B.16
FF. Subcontracting B.16
GG. Validity B.17
HH. Waiver B.17
II. Warranty Against Contingent Fees B.18

Section 3 Terminations
A. Termination for Breach of Warranty to Maintain Compliance with County's Child Support Compliance Program B.19
B. Termination for Convenience B.19
C. Termination for Default B.20
D. Termination for Improper Consideration B.21
E. Termination for Insolvency B.21
F. Termination for Nonadherence of County Lobbyists Ordinance B.22
G. Termination for Nonappropriation of Funds B.22

Section 4 General Conditions of Contract Work
A. Authority of Public Works and Inspection B.23
B. Cooperation B.23
C. Cooperation and Collateral Work B.23
D. Equipment, Labor, Supervision, and Materials B.23
E. Gratuitous Work B.23
F. Jobsite Safety B.23
G Labor B.24
H Labor Law Compliance B.24
I. Overtime B.24
J. Permits/Licenses B.24
K. Prohibition Against Use of Child Labor B.24
L. Public Convenience B.25
M. Public Safety B.25
N. Quality of Work B.25
O. Quantities of Work B.25
P. Safety Requirements B.25
Q. Storage of Materials and Equipment B.25
R. Transportation B.26
S. Work Area Controls B.26

Section 5 Indemnification and Insurance Requirements
A. Independent Contractor Status B.27
B. Indemnification B.27
C. Workplace Safety Indemnification B.28
D. General Insurance Requirements B.28
E. Compensation for County Costs B.30
F. Insurance Coverage Requirements for Subcontractors B.30
G. Insurance Coverage Requirements B.30

Section 6 Contractor Responsibility and Debarment
A. Responsible Contractor B.32
B. Chapter 2.202 of the County Code..... B.32
C. Non-Responsible Contractor. B.32
D. Contractor Hearing Board. B.32
E. Subcontractors of Contractor B.33
Section 7 Compliance with the County's Jury Service Program
A. Jury Service Program..... B.34
B. Written Employee Jury Service Policy..... B.34
Section 8 Safely Surrendered Baby Law Program
A. Contractor's Acknowledgment of County's Commitment to the Safely Surrendered Baby Law B.36
B. Notice to Employees Regarding the Safely Surrendered Baby Law ... B.36
Section 9 Compliance with the County's Living Wage Program
A. Living Wage Program B.37
B. Payment of Living Wage Rates B.37
C. Contractor's Submittal of Certified Monitoring Reports B.38
D. Contractor's Ongoing Obligation to Report Labor Law/Payroll Violation and Claims B.39
E. County Auditing of Contractor Records B.39
F. Notifications to Employees..... B.39
G. Enforcement and Remedies B.40
H. Use of Full-Time Employees B.41
I. Contractor Retaliation Prohibited B.42
J. Contractor Standards B.42
K. Neutrality in Labor Relations B.42
Section 10 Transitional Job Opportunities Preference Program..... B.43
Section 11 Local Small Business Enterprise (SBE) Preference Program..... B.44

EXHIBIT C **Internal Revenue Service Notice 1015**
EXHIBIT D **Safely Surrendered Baby Law Posters**
EXHIBIT E **Bus Stop Shelter Locations**
EXHIBIT F.1 **Bus Stop Shelter Specifications – Solar Powered**
EXHIBIT F.2 **Bus Stop Shelter Specifications – Bus Stop Bench**
EXHIBIT F.3 **Bus Stop Shelter Specifications – Trash Receptacle**
EXHIBIT F.4 **Bus Stop Shelter Specifications – Solar-Powered Light Pole - Model i-STOP™ F1/EverGEN™ Solar Engine SE-10**
EXHIBIT G **Bus Stop Shelter Diagrams**
EXHIBIT H **Proposed Cost for Bust Stop Amenities**
EXHIBIT I **Sample Fuel Adjustment Calculation: Fuel Purchased at Market Prices**

AGREEMENT FOR

MAINTENANCE PROGRAM FOR NONADVERTISING BUS STOP AMENITIES – NORTH COUNTY

THIS AGREEMENT, made and entered into this ____ day of _____, 2008, by and between the COUNTY OF LOS ANGELES, a subdivision of the State of California, a body corporate and politic (hereinafter referred to as COUNTY) and SURETECK INDUSTRIAL & COMMERCIAL SERVICES, INC., a Corporation (hereinafter referred to as CONTRACTOR).

WITNESSETH

FIRST: The CONTRACTOR, for the consideration hereinafter set forth and the acceptance by the Board of Supervisors of said COUNTY of the CONTRACTOR'S Proposal filed with the COUNTY on November 21, 2007, hereby agrees to provide services as described in the attached specifications for Maintenance Program for Nonadvertising Bus Stop Amenities – North County, including, but not limited to, Exhibit A, Scope of Work.

SECOND: This AGREEMENT, together with Exhibit A, Scope of Work; Exhibit B, Service Contract General Requirements; Exhibit C, Internal Revenue Service Notice 1015; Exhibit D, Safely Surrendered Baby Law Posters; Exhibits E, Bus Stop Shelter Locations; Exhibit F, Bus Stop Shelter Specifications; Exhibit G, Bus Stop Shelter Diagrams; Exhibit H, Proposed Cost for Bus Stop Amenities; Exhibit I, Sample Fuel Adjustment Calculation: Fuel Purchased at Market Prices; the CONTRACTOR'S Proposal as it relates to Bus Stop Maintenance in the North area, all attached hereto; the Request for Proposals; and Addenda to the Request for Proposals, all of which are incorporated herein by reference, are agreed by the COUNTY and the CONTRACTOR to constitute the Contract.

THIRD: The COUNTY agrees, in consideration of satisfactory performance of the foregoing services in strict accordance with the Contract specifications to the satisfaction of the Director of Public Works, to pay the CONTRACTOR pursuant to the Schedule of Prices set forth in the Proposal and attached hereto as Form PW-2. In no event will the COUNTY pay any and all contractors providing services under this Program, an aggregate annual amount not to exceed $274,270 (Maximum Contract Sum), or such greater amount as the Board may approve.

FOURTH: This Contract's initial term shall be for a period of one year commencing on March 18, 2008, or upon Board approval whichever occurs last. At the discretion of the COUNTY, this Contract may be extended in increments of one year, not to exceed a total contract period of three years. The COUNTY, acting through the Director, may give a written notice of intent to extend this Contract at least 30 days prior to the end of each term.

FIFTH: The CONTRACTOR shall bill monthly, in arrears, for the work performed during the preceding month. Work performed shall be billed at the unit prices quoted in Form PW-2, Schedule of Prices.

SIXTH: Public Works will make payment to the CONTRACTOR within 30 days of receipt and approval of a properly completed invoice. Each invoice shall be in triplicate (original and two copies) and shall itemize the work completed. The invoices shall be submitted to:

County of Los Angeles Department of Public Works
Attention Fiscal Division, Accounts Payable
P.O. Box 7508
Alhambra, CA 91802-7508

SEVENTH: The CONTRACTOR understands and agrees that only the designated Public Works Contract Manager is authorized to request or order work under this Contract. The CONTRACTOR acknowledges that the designated Contract Manager is not authorized to request or order any work that would result in the CONTRACTOR earning an aggregate compensation in excess of this Contract's Maximum Contract Sum.

EIGHTH: The CONTRACTOR shall not perform or accept work requests from the Contract Manager or any other person that will cause the Maximum Contract Sum of this Contract to be exceeded. The CONTRACTOR shall monitor the balance of this Contract's Maximum Contract Sum. When the total of the CONTRACTOR'S paid invoices, invoices pending payment, invoices yet to be submitted, and ordered services reaches 75 percent of the Maximum Contract Sum, the CONTRACTOR shall immediately notify the Contract Manager in writing. The CONTRACTOR shall send written notification to the Contract Manager when this Contract is within six months from expiration of the term as provided for hereinabove.

NINTH: No cost-of-living adjustments shall be granted for the optional renewal periods.

TENTH: The Director may adjust 12 percent of the hourly rate of compensation set forth in Form PW-2 (Schedule of Prices) based on the increase or decrease in the fuel price published in the Official Energy Statistics from the United States Department of Energy website at <http://tonto.eia.doe.gov/dnav/pet/pet_pri_gnd_dcus_sca_m.htm> for Diesel (On-Highway) and Gasoline - All Grades (Regular) for California, and at <http://tonto.eia.doe.gov/dnav/pet/pet_pri_prop_dcu_r50_m.htm> for Liquid Propane Gas (LPG) using West Coast (PADD 5) "Commercial/Institutional," as appropriate to the vehicle used, beginning on the month of this Contract's start date and thereafter at each successive six month interval, which shall be the effective date for any such fuel adjustment. The percentage change in the fuel price shall be obtained using the fuel prices published three months preceding the proposal submission date and the fuel price published three months preceding each effective date of the adjustment. However, when the percentage increase or decrease in the fuel price is less than 5 percent, no fuel adjustment will be granted. In the event the fuel adjustment is granted, the fuel adjustment (increase or decrease) will be added to or subtracted from, as applicable, the hourly rate of compensation to establish the adjusted hourly rate of compensation. A sample calculation is included in Exhibit I. Public Works shall be permitted to audit the CONTRACTOR'S fuel

usage, fuel costs, and fuel procurement methods for the vehicles used in providing the service and the CONTRACTOR shall provide records pertaining to its fuel costs upon the COUNTY'S request. CONTRACTOR shall immediately notify the COUNTY if the CONTRACTOR changes from purchasing fuel using Market Prices, to a long-term agreement for fuel purchases.

ELEVENTH: In the event that terms and conditions, which may be listed in the CONTRACTOR'S Proposal, conflict with the COUNTY'S specifications, requirements, and terms and conditions as reflected in this AGREEMENT, including, but not limited to, Exhibits A through I, inclusive, the COUNTY'S provisions shall control and be binding.

TWELFTH: The CONTRACTOR agrees in strict accordance with the Contract specifications and conditions to meet the COUNTY'S requirements.

THIRTEENTH: This Contract constitutes the entire agreement between the COUNTY and the CONTRACTOR with respect to the subject matter of this Contract and supersedes all prior and contemporaneous agreements and understandings.

//
//
//
//
//
//
//
//
//
//
//
//
//
//
//
//
//
//
//
//
//
//
//
//
//
//
//
//
//
//
//
//
//
//
//

IN WITNESS WHEREOF, the COUNTY has, by order of its Board of Supervisors, caused these presents to be subscribed by the Chair of said Board and the seal of said Board to be affixed and attested by the Clerk thereof, and the CONTRACTOR has subscribed its name by and through its duly authorized officers, as of the day, month, and year first written above.

COUNTY OF LOS ANGELES

By_____
Chair, Board of Supervisors

ATTEST:

SACHI A. HAMAI
Executive Officer of the
Board of Supervisors of
the County of Los Angeles

By _____
Deputy

APPROVED AS TO FORM:

RAYMOND G. FORTNER, JR.
County Counsel

By _____ (FOR M.M.)
Deputy

SURETECK INDUSTRIAL & COMMERCIAL SERVICES, INC.

By _____
Its President

Guy Sotelo Garcia
Type or Print Name

By _____
Its Secretary

Richard S. Pelkie
Type or Print Name

P:\aspub\CONTRACT\BEN\TRANSITSTOP NORTH & SOUTH\2008 - JULY 2007\FINAL AGRREMENTS\Final AGREEMENT - North.doc

CALIFORNIA ALL-PURPOSE ACKNOWLEDGMENT

State of California }
County of Los Angeles }

On Jan. 31, 2008 (Date) before me, Angelica Castaneda, Notary Public (Here Insert Name and Title of the Officer),

personally appeared Gino Sotelo Garcia and Richard S. Pelsue (Name(s) of Signer(s)),

who proved to me on the basis of satisfactory evidence to be the person(s) whose name(s) ~~is~~/are subscribed to the within instrument and acknowledged to me that ~~he/she~~/they executed the same in ~~his/her~~/their authorized capacity(ies), and that by ~~his/her~~/their signature(s) on the instrument the person(s), or the entity upon behalf of which the person(s) acted, executed the instrument.

I certify under PENALTY OF PERJURY under the laws of the State of California that the foregoing paragraph is true and correct.

WITNESS ~~my hand~~ and official seal.

Signature Angelica Castaneda (Signature of Notary Public)

ANGELICA CASTANEDA
Commission # 1713484
Notary Public - California
Los Angeles County
My Comm. Expires Jan 28, 2011

Place Notary Seal Above

OPTIONAL

Though the information below is not required by law, it may prove valuable to persons relying on the document and could prevent fraudulent removal and reattachment of this form to another document.

Description of Attached Document

Title or Type of Document: Agreement For Maintenance Program For Nonadvertising Bus Stop Amenities - North County

Document Date: _____ Number of Pages: _____

Signer(s) Other Than Named Above: _____

Capacity(ies) Claimed by Signer(s)

Signer's Name: _____
☐ Individual
☐ Corporate Officer — Title(s): _____
☐ Partner — ☐ Limited ☐ General
☐ Attorney in Fact
☐ Trustee
☐ Guardian or Conservator
☐ Other: _____

Signer Is Representing: _____

RIGHT THUMBPRINT OF SIGNER
Top of thumb here

Signer's Name: _____
☐ Individual
☐ Corporate Officer — Title(s): _____
☐ Partner — ☐ Limited ☐ General
☐ Attorney in Fact
☐ Trustee
☐ Guardian or Conservator
☐ Other: _____

Signer Is Representing: _____

RIGHT THUMBPRINT OF SIGNER
Top of thumb here

©2007 National Notary Association • 9350 De Soto Ave., P.O. Box 2402 • Chatsworth, CA 91313-2402 • www.NationalNotary.org Item #5907 Reorder: Call Toll-Free 1-800-876-6827

SCOPE OF WORK

MAINTENANCE PROGRAM FOR NONADVERTISING BUS STOP AMENITIES – NORTH COUNTY

A. Public Works Contract Manager

Public Works Contract Manager will be Mr. William Yan of Programs Development Division, who may be contacted at (626) 458-3961, e-mail address: wyan@dpw.lacounty.gov, Monday through Thursday, 7:30 a.m. to 5:45 p.m. The Contract Manager is the only person authorized by Public Works to request work of the Contractor; however, the Contract Manager may delegate this task to staff and will notify the Contractor when doing so. From time to time, Public Works may change the Contract Manager. The Contractor will be notified in writing when there is a change in Contract Manager. In the event of an emergency after normal business hours, staff can be reached at (888) 524-6287.

B. Work Location

Services shall be performed at designated bus stop shelters and transit stops in the unincorporated areas of the County as specified in Exhibit E.

The County reserves the right to add or remove locations and to increase or reduce the service within this area anytime during the entire term of this Contract.

C. Work Description

The work to be completed shall include the furnishing of all labor, supervision, materials and equipment necessary for the routine and emergency cleaning, repair and maintenance of bus stop shelters and appurtenances, bus benches, trash receptacles, solar light poles, other bus stop amenities, and concrete foundations, hereinafter referred as bus stop amenities, located at designated transit stops within the unincorporated areas of the County as specified in Exhibit E. The work also includes the collection, transportation, and disposal of waste from trash receptacles located at designated transit stops within the unincorporated areas of the County as specified in Exhibit E. All work must comply with the Specifications included in Exhibit F.

The County reserves the right to determine if any work is or will be needed and/or requested under this Contract, at the County's sole and absolute discretion. The Contractor waives all claims against the County for consequential damages resulting from the County's failure to use the Contractor's services, including, but not limited to, lost profit.

The County reserves the right to add or delete a location and to change the frequency of the maintenance at any of the selected transit stops at anytime during the life of this Contract at the sole discretion of the County.

D. Hours and Days of Service

1. Maintenance of Bus Shelters and Amenities

No maintenance work shall be done within the peak traffic hours, from 6 a.m. to 9 a.m., and 4 p.m. to 7 p.m., Monday through Friday, except holidays. All construction, installation, repair, relocation, or removal work shall not be performed during the peak traffic hours unless the work is of an emergency nature or otherwise approved by the Contract Manager.

2. Collection, Transportation, and Disposal of Waste from Designated Transit Stops

No routine manual waste collection services at designated transit stops shall be done within the peak traffic hours, from 6 a.m. to 9 a.m., and 4 p.m. to 7 p.m., Monday through Friday, except holidays. Emergency manual waste collection or bus stop cleaning services to mitigate public safety or health issues may be allowed at any time and day.

E. Equipment

1. Service and Support Vehicles

The Contractor shall provide any and all service and support vehicles necessary for adequate operation, maintenance, and supervisory support. These vehicles shall be in good operating condition and appearance. Contractor shall also comply with requirements as described in subsection E.3, Maintenance and Waste Collection Vehicles, herein for vehicles used to collect, transport, and manage/dispose of waste.

2. Pressure Wash Vehicles

Water and residuals from pressure washing sidewalks or bus stop amenities shall not be allowed to enter the storm drain.

3. Maintenance and Waste Collection Vehicles

Contractor shall:

a. Provide a sufficient number of vehicles (chassis and bodies) for providing manual waste collection services at all designated transit stops located within the unincorporated areas of the County as specified in Exhibit E.

b. Provide and have available at all time vehicles that are leak proof for use in the manual collection and transportation of waste. Each vehicle shall be equipped with metal bodies and covers.

c. Comply with all related County ordinances, State Vehicle Codes, and all conditions and limitations in any permits or licenses under which Contractor operates, including, but not limited to, a California Class A or B or C61 (D34) contractor's license and a valid Waste Collector Permit issued by the County Department of Health Services.

d. Be responsible for maintaining established inspection and maintenance procedures to ensure that all manual collection vehicles are safe to operate within the areas at all times in accordance with the requirements promulgated by the County of Los Angeles Department of Health Services, the California Highway Patrol, the South Coast Air Quality Management District (SCAQMD), the vehicle manufacturer, and all other applicable Federal, State, County, and local laws and regulations.

e. Use vehicles to collect, transport, and manage/dispose of waste that are so constructed such that liquids and waste do not blow, fall, sift, or leak out of the truck and onto the street.

f. Use vehicles to collect, transport, and manage/dispose of waste that are equipped with an adequate shovel and broom.

g. Use vehicles to collect, transport, and manage/dispose of waste that are at all times, kept clean, in good mechanical condition, and well painted, all to the satisfaction of the Contract Manager. All such vehicles shall be painted the same color or colors.

h. Possess a sufficient number of manual collection vehicles for collecting in the unincorporated areas, including spare vehicles to maintain the collection schedule at all times. Spare vehicles shall be fully fueled and ready to dispatch and replace any vehicle, which breaks down on route within reasonable time of such breakdown. All manual collection vehicles shall be equipped with adequate radio/communication equipment for office-to-field communication.

i. Comply with all the provisions issued by the SCAQMD for all new or replacement of automated and/or manual collection vehicles for work performed under this Contract.

j. Maintain records of inspections and maintenance of all mechanical equipment used in providing the required services under this Contract, including records of preventive maintenance and repairs performed. Items to be inspected shall include, among others, those required in the inspections conducted by the County of Los Angeles Department of Health Services, the California Highway

Patrol, and those recommended by the manufacturer. All inspection and maintenance records shall be open to inspection by the County.

k. Require drivers and Subcontractor's drivers, if applicable, to have valid licenses issued by the California Department of Motor Vehicles to operate the specific class of vehicles used in providing the required services. It is the responsibility of Contractor to monitor the drivers' driving performance and records.

l. Remove from service should the Contract Manager at any time give notification to Contractor that any designated manual collection vehicle or other conveyance is not in compliance with Public Works and/or the County of Los Angeles Department of Health Services (Health Officer), and/or the SCAQMD standards, and such vehicle or other conveyance shall not be used again until inspected and approved by the Contract Manager and/or the Health Officer. Contractor shall be held responsible for maintaining the collection schedule regardless of such action.

m. Keep all vehicles, equipment, tools, and facility used in the manual collection/management of waste clean and sanitary at all times when not in use.

n. Comply with all laws and regulations relating to the parking or storage of such vehicles and equipment.

4. Maintenance Equipment

Contractor shall be responsible for providing all necessary equipment and labor for routine maintenance, and as-needed repair, removal, relocation, replacement including trash receptacle liners, covers, and all necessary parts, accessories or materials for reconstruction or maintenance at the cost specified in Form PW-2, Schedule of Prices. Unless approved otherwise by the Contract Manager the replacement parts, accessories, and/or materials shall be identical to the original design. The Contract Manager will consider alternative trash receptacles, if necessary, including liners and dome covers, proposed by Contractor.

5. Communication Equipment

The Contractor shall have office staff operating and answering incoming calls during normal business hours (Monday through Friday, 8 a.m. to 5 p.m.). After normal business hours, the Contractor shall provide Contract Manager with an emergency telephone number at which someone can always be reached 24 hours a day, seven days a week.

Contractor shall be responsible for providing two-way communication between its office and field workers at all times, as well as for proper maintenance of this equipment.

F. Maintenance of Bus Shelters and Amenities

1. Frequency of Maintenance

Contractor shall:

a. Perform routine maintenance at all designated bus stop shelters and amenities indicated in Exhibit E. Routine maintenance shall be done on a once-a-week basis, during non-peak hours as described in subsection F.5.a, Routine Maintenance, Monday through Friday, including holidays, unless otherwise specified or directed by the Contract Manager. Upon oral or written request from the Contract Manager Contractor shall make more visits to shelters that require additional maintenance and/or repair.

b. Pressure wash the bus stop shelter structure and sidewalk adjacent to the serviced bus stops. Pressure wash shall be done every six weeks, unless otherwise specified or directed by the Contract Manager.

c. Inspect each stand-alone solar light pole for functionality once every two months.

d. Keep the roof/gutter of each shelter free of dirt and leaves.

2. Emergency Services

Emergency construction, maintenance, repair, or removal of damaged bus stop shelters and amenities required to eliminate a hazard to pedestrian, property, or vehicular traffic may occur at any time and day, but only to the extent required to remove the hazard. Other exceptions for specific locations may be allowed upon approval of Contract Manager.

3. Graffiti Removal Services

Graffiti removal services shall consist of performing all operations to remove or cover graffiti from all exterior surfaces within a 10-foot radius of each bus stop amenity, but shall not be performed beyond the face of curb or onto private property. Failure to comply with this requirement shall result in the assessment specified in Section M., Liquidated Damages.

The Contractor shall:

a. Remove or paint over all graffiti on all designated bus stop amenities within 24 hours of the graffiti being discovered by the Contractor, or being reported by the County. Profanity, sexually explicit, or racist type graffiti shall have the highest removal priority. Graffiti placed on bus stop amenities during the weekends shall be removed on the following work day. Within 48 hours of initial paint-over, Contractor shall repaint using a color to match the existing surface color, if a matching color was not utilized initially.

b. Use appropriate methods of covering or removing graffiti for the particular surface and conditions, such as water blasting, painting over, chemical solvents, etc. Water and residuals from water blasting shall not be allowed to enter the storm drain.

c. Use County-approved chemical solvents when removing graffiti from County property.

d. Use paint that is appropriate for nontreated surfaces on County property.

e. Match the existing color of the surface when painting over or obscuring graffiti whenever possible. Paint shall be neatly feathered in all areas.

f. Use drop cloths on all work assignments to protect sidewalks, vegetation, etc., from paint spillage.

g. Train personnel in proper graffiti removal techniques and provide corrective instruction to personnel if they are removing or covering graffiti improperly.

h. Use new or recycled water-based paints.

i. Sidewalk Surfaces: Remove graffiti from concrete sidewalks by using a water blasting machine with a soda compound only. Painting over shall not be permitted. The sidewalks shall be cleaned of all graffiti, graffiti residues, paint, ink, gum, oil, etc. The sidewalks shall be blocked off for safety during the cleaning operations. Adequate precautions shall be taken not to damage private property during water blasting operations, i.e., precautionary measures to prevent water from going under shop doors, damaging store fronts, etc. The sidewalk areas being cleaned shall be feathered to match other graffiti-free sidewalk areas.

j. Dispose of excess paint properly. Paint liners shall be opened, mixed with sand, dirt, or cat litter and allowed to dry. Once the paint is completely dry, it can be disposed of in the regular trash.

k. Wash paint brushes, rollers, or frames in clean water. The water shall only be disposed of in a sink or toilet. Water used to clean paint tools shall not be disposed of in storm drains and street gutters and/or on sidewalks and streets.

4. Locations and Permits

Bus stop shelter and amenity locations shall be at designated transit stops located in the unincorporated areas of the County determined by the Contract Manager as specified in Exhibit E. Contract Manager shall have the right to direct Contractor to replace, remove or relocate any of the bus stop shelters and amenities. Contract Manager shall provide typical design and specifications, as well as all necessary permits and inspections, as required and outlined in Section F.10, Specifications, Permits, and Inspections.

5. Maintenance Specifications

a. Routine Maintenance

(1) General Scope

Contractor shall maintain the bus stop amenities in a safe, clean, attractive, and sanitary condition and in good order satisfactory to the Contract Manager. At each maintenance visit, Contractor shall clean, wash and remove all graffiti, stickers, posters, litter, dust, dirt, and weeds from each bus stop amenity to keep each bus stop amenity (including the roof/gutter and/or electronic message display, of the shelters, if applicable), and immediate area free of any noticeable accumulation of dirt, dust, marks, stickers,

posters, litter, or weeds. The bus stop amenity shall be maintained in a continual like new condition. Bus stop shelters may be energized using hard wire or solar panels attached directly to the shelter or to a pole adjacent to the shelter. Maintenance shall be performed within a 10-foot radius of the bus stop amenities, but shall not extend beyond the face of curb or onto private property. If notified by the Contract Manager that additional maintenance is required, Contractor shall correct the condition within two working days of receipt of notice. The Contract Manager reserves the right to add or remove bus stop amenity locations throughout the unincorporated areas of the County. The maintenance cost per shelter and appurtenances, bus benches, trash receptacles, and stand-alone solar-powered lighting shall be specified in Form PW-2, Schedule of Prices, Maintenance of Bus Shelters and Amenities.

(2) Pressure Wash

Contractor shall pressure wash bus stop amenities, and sidewalk within a 10-foot radius of the bus stop amenities at a frequency as indicated in Section F.1, Frequency of Maintenance. Contractor shall indicate how wastewater will be treated and not discharged to the storm drain.

(3) Best Management Practices - Trash Receptacle

Contractor shall carry an adequate supply of clean aluminum liners during routine maintenance visits to ensure that liners are kept in a clean condition. Contractor shall promote Best Management Practices (BMPs) not to allow any waste or liquid from trash receptacles or liners to enter the storm drains and/or street gutters during the maintenance of trash receptacles and liners. This is a violation of NPDES regulations. Contractor shall replace all aluminum liners with new or cleaned aluminum liners as needed to the satisfaction of the Contract Manager. Soiled aluminum liners shall be cleaned at Contractor's facility in accordance with all Federal, State, and local regulations.

b. <u>Repair</u>

(1) Contractor shall perform repair to damaged bus stop amenities within five working days or within a time frame approved by the Contract Manager for any damage or vandalism found by Contractor's employees, agents, or

subcontractors. Contractor shall provide County a cost estimate and obtain approval from the Contract Manager before proceeding with the repair. All damaged amenities shall be repaired to the satisfaction of the Contract Manager.

(2) Upon notification from constituents and/or the Contract Manager of a potential hazard or damage or vandalism of an emergency nature to the public, Contractor shall expedite repairs or render the condition safe. Contractor shall promptly tape off the affected areas to make them safe until repairs are completed. Repairs shall be completed within 24 hours of notification. Failure to comply with this requirement for emergency repair shall result in the assessment of liquidated damages, specified in Section M.4.a.

(3) Contractor shall repair all leaking or damaged trash receptacles within five working days of oral or written notice from Contract Manager or at times found by Contractor's employees, agents, or subcontractors. In the event that the repairable or damaged trash receptacle cannot be repaired prior to the next scheduled collection, Contractor may, with the approval of the Contract Manager, provide a temporary but acceptable trash receptacle until Contractor provides a permanent replacement. A trash receptacle is considered acceptable when it has a solid exterior and liner and has a cover or dome to prevent rain water from getting into the trash receptacle. Failure to comply with this requirement shall result in the assessment of liquidated damages specified in Section M.4.f.

(4) Contractor shall maintain a record of all the repaired or replaced amenities. The record shall include, but not limited to, location, type of amenities, date of repair or replacement, and reason for repair or replacement. Contractor shall submit a monthly log specifying, at minimum information defined in subsection F.11.a, Reports.

c. <u>Duty to Remove</u>

(1) The County reserves the right to require the Contractor to remove bus stop amenities for any reason at the cost specified in Form PW-2, Schedule of Prices, Removal of Bus Stop Amenities.

(2) Said removal shall be performed in accordance with all applicable laws, ordinances, or other regulations and the premises shall be restored to their original condition as set forth in Subsection F.15, Restoration of Site upon Removal or Relocation.

(3) If the bus stop amenity is totally destroyed due to fire, accident, or force of nature; Contractor shall remove the affected amenities within 24 hours of notification by the Contract Manager. Failure to remedy an emergency removal shall result in the assessment specified in Section M.4.g, Liquidated Damages.

d. Replacement

Contractor shall:

(1) Notify and obtain prior approval from the Contract Manager before replacement is made. Work shall be completed within five working days or within a time frame approved by the Contract Manager at the cost specified in Form PW-2, Schedule of Prices, Replacement.

(2) Be responsible for providing all necessary replacement equipment and labor for maintenance, including trash receptacle exterior frames, liners, and all necessary parts, accessories or materials for reconstruction or maintenance of said contract at the cost specified in Form PW-2, Schedule of Prices, Replacement. Unless approved otherwise by the Contract Manager the replacement equipment and/or parts and accessories shall be identical to the original design. The Contract Manager will consider alternative trash receptacles, including liners and dome covers, proposed by Contractor.

(3) Charge in accordance with Contractor's price stated in Form PW-2, Schedule of Prices, Replacement, for each replacement of each part or entire amenity, labor, or any other necessary changes.

e. Relocation

Contractor Shall:

(1) At the request of Contract Manager, Contractor shall relocate any bus stop amenity, at the cost specified in Form PW-2 Schedule of Prices, Relocation.

(2) Make arrangements to diligently pursue construction completion of any relocated amenity. A bus stop amenity shall be considered completed when 1) all installations, assemblies, and electrical connections (if any) are accepted by County inspector; 2) the amenity is fully functional; and 3) the amenity may be safely used by the public.

(3) Be responsible to energize bus stop shelters using either hard wire or solar panels attached directly to the shelter or to a pole adjacent to the shelter in a method approved by the Contract Manager.

(4) Perform relocations in accordance with all applicable laws, ordinances, or other regulations and the premises shall be restored to their original condition as set forth in Section F.15, Restoration of Site upon Removal or Relocation.

f. Electrical Work

Electrical repair work shall comply with the National Electrical Code (NEC) requirements. Contractor shall have the right to enter upon and into the bus shelters at any reasonable time with its certified electrician for the purposes of any electrical maintenance. Contractor shall have access to all necessary electric wires, meters, clockwork machinery, and other parts of the structure necessary for maintaining the shelters and all such work shall be included with the price specified in Form PW-2, Schedule of Prices, Routine Maintenance of Bus Shelters and Amenities. If an electrical malfunction occurs, the Contractor shall de-energize the shelter and notify the Contract Manager immediately. All repairs shall be completed within 24 hours. Failure to comply with this requirement shall result in the assessment specified in Section M.4.b, Liquidated Damages.

g. Electrical Lighting and Solar-Powered Lighting

All bus shelters shall be illuminated from dusk to dawn. Contractor shall be responsible to ensure proper illumination within bus shelters using either hard wire or solar panels attached directly to the shelter or to a pole adjacent to the shelter in a method approved by the Contract Manager. During each maintenance visit, Contractor shall examine lighting for functionality for shelters that are hard-wired or have solar panels attached to the roof. Stand-alone solar-powered light poles are to be examined every

two months for functionality. If electrical lights or solar-powered lights are found to be malfunctioning at the time of maintenance, or upon oral or written request from Contract Manager, Contractor shall be required to repair, or replace electrical or solar-powered lighting with similar lighting within 48 hours or within a time frame approved by the Contract Manager. If new batteries are required for solar-powered lighting, the old batteries shall be recycled in accordance with all Federal, State, and local regulations. Contractor shall provide a receipt to ensure that solar panels and apparatus are recycled properly. Failure to comply with this requirement shall result in the assessment specified in Sections M.3.c and/or M.3.d, Liquidated Damages.

h. Performance Requirements

Public Works will make monthly inspections of randomly selected shelters to ascertain the condition of shelters. A shelter may be considered in unacceptable condition if one or more of the following conditions are found during the inspection:

- Visible graffiti from the street
- An unsightly/significant amount of litter, dust, dirt, or weeds within a 10-foot radius of shelter
- Overflow of trash
- Missing or damaged components of shelter
- Exposed electrical wires
- No illumination

When there is a justifiable reason for the shelter to be in an unacceptable condition, such as a community event that took place immediately prior to the inspection, the Contractor shall provide this justification in writing to the Contract Manager.

i. Suppliers

The following is a list of suppliers available for the type of trash receptacles, benches, and shelters required.

For bus shelters, trash receptacles, and benches, Contractor can contact either of the following:

1.) LNI Custom Manufacturing, Inc.
12536 Chandron Avenue
Hawthorne, CA 90250
(310) 978-2000, Fax (310) 978-4000
Contact: Craig Watterson

2.) Seating Component
4520 East La Palma Avenue
Anaheim, CA 92807-1908
(714) 693-3376, Fax (714) 693-3353
Contact: Mark Fossier

3.) Tolar Manufacturing, Inc.
258 Mariah Circle
Corona, CA 92879
(951) 808-0081, Fax (951) 808-0041
Contact: Patrick Merrick

For bus stop benches and trash receptacles only, Contractor can contact either of the following:

1.) Specialty Building Components
7750 Painter Avenue
Whittier, CA 90602
(562) 945-8951
Contact: Gloria Irigoyun

2.) The Wakefield Company
49 Augusta
Irvine, CA 92620
(949) 552-1130
Contact: Ryan Richard

3.) Barco Products Company
11 North Batavia Avenue
Batavia, IL 60510-1961
(800) 338-2697, Fax (630) 879-8687

Vendors for Solar Light Poles only, Contractor can contact either of the following:

1.) National Solar Technologies
166 Taylor Drive
Depew, NY 14043
(808) 310-7413, Fax (716) 683-8655
Contact: Paul Vargovich, Jr.

2.) Sol Inc.
3210 SW 42nd Avenue
Palm City, FL 34990
(800) 959-1329, Fax (772) 286-9616

Contact: Matt Hollister

3.) Carmanah Technologies
Building 4-203 Harbour Road
Victoria, British Columbia
Canada V9A 3S2
(877) 722-8877
Contact: Jeff Peters or Matthew Watson

6. Collection, Transportation, and Disposal of Waste from Designated Transit Stops

a. General Scope

Contractor shall only dispose of waste under this Contract at permitted facilities and shall comply with all Federal, State, and local laws and regulations. Except as noted otherwise, Contractor shall NOT collect, transport, or dispose of hazardous or toxic materials as defined per Federal, State, or local laws or regulations under this Contract. Contractor shall immediately notify County if hazardous or toxic materials are discovered during the collection.

Waste collection, transportation, and disposition shall be done in a thorough and professional manner to the satisfaction of the Contract Manager. The Contract Manager shall approve or disapprove Contractor's performance under this Contract. These services shall be performed by a permitted trash hauler. Under the requirements of the permit, which is issued by the County of Los Angeles Department of Health Services (DHS), the sizes and types of the trucks, etc. will be determined. The hauler's facility to store and maintain the trucks will also be regulated by DHS. For further information regarding this requirement you may contact DHS at (626) 430-5550.

b. Emergency Services

Emergency manual waste collection services required to eliminate a hazard to either pedestrian, property, or vehicular traffic may occur at any time and day, but only to the extent required to remove the hazard. Other exceptions for specific locations may be allowed upon approval of the Contract Manager.

c. Frequency of Collection

Contractor shall manually collect waste from all trash receptacles at designated transit stops indicated in Exhibit E.

Routine collection of waste shall be done once a day, five times a week, Monday through Friday, including holidays, except within Antelope Valley Watershed applicable only to the northern unincorporated areas of the County, which shall be done twice a week, but shall be at least two days apart. Routine collection of waste shall be done during non-peak hours. Peak hours are defined from 6 a.m. to 9 a.m. and 4 p.m. to 7 p.m.

Contractor shall strictly adhere to the collection schedule and frequency of collection unless otherwise specified or directed by the Contract Manager.

The County reserves the right to add or delete a location and/or the frequency of collection at any of the selected transit stops at anytime during the term of this Contract.

Contractor may be required, upon oral or written request from the Contract Manager, to return to any collection route to collect waste not picked up at the designated transit stops. This shall be performed whenever directed by the Contract Manager.

Failure to comply with each collection schedule shall result in the assessment specified in Section M.4.e, Liquidated Damages.

d. Noncollection Items

Hazardous materials and all bulk items including, but not limited to, furniture, appliances, household bedding, mattresses, box springs, stoves, refrigerators, and other household items considered as noncollection items by waste haulers shall NOT be collected by Contractor. Contractor shall report all noncollection items to Public Works Programs Development Division at (626) 458-3907 (Monday through Thursday) on the same business day. If Public Works office is closed, Contractor shall report noncollection items on the next Public Works' business day and keep a record of all locations where the noncollection items have been left.

e. Care of Liners

All liners, for manual collection, shall be properly returned and placed after collection. Liners shall not be deposited on the streets, highways, or on adjoining property. Contractor, its agents, and/or its employees shall not throw or drop liners from the truck onto the pavement, or in any other way that may break or damage them.

At the time of collecting waste from each trash receptacle each day, Contractor shall place and secure a plastic bag inside each liner to maintain the clean condition of the aluminum liners. The plastic bags shall be heavy duty and designed to have suitable strength to contain the waste materials therein.

f. Collection Specifications

The County reserves the right to add or remove trash receptacle locations throughout the unincorporated areas of the County as specified in Exhibit E, at anytime during the term of this Contract at the sole discretion of the Contract Manager. The cost of waste collection, transportation, and disposal shall be specified in Form PW-2, Schedule of Prices, for Collection, Transportation, and Disposal of Waste.

g. Waste Collection and Reporting

(1) Waste Collection - All waste collected from the trash receptacles shall be sent to a permitted materials recovery facility (MRF) for processing and recovery of recyclables to the maximum extent reasonable and feasible including, but not limited to, paper, CRV beverage containers, glass, number 1 and 2 plastics, steel, and aluminum. Waste remaining after the removal of recyclables may be disposed of at a permitted waste disposal facility. Unless otherwise approved in writing by the Contract Manager, the Contractor or the MRF operator SHALL NOT dispose of any recovered recyclables in a disposal site and/or transformation facility.

A list of all permitted MRFs in the County can be obtained by calling the Solid Waste Information System hotline at 800-320-1771 or by visiting www.solidwastedrs.org and clicking on "Where to Take Your Waste" link on the left side and choosing option 3 for a list of transfer stations.

(2) Reporting - Contractor shall prepare or cause to be prepared reports on a monthly basis that provide the following information on waste collected from the trash receptacles:

(a) Month and year of reported collection

(b) Total quantity (in tons) of waste collected

(c) Location (route, community, watershed, etc.) where the waste was collected

(d) The permitted materials recovery, disposal, or transfer facility where the collected waste was sent (facility name, address, and contact information)

(e) Quantity of collected waste (in tons) recovered/salvaged (i.e., not sent for disposal) by the MRF

(f) Quantity of collected waste (in tons) sent for disposal

Note that total tons collected shall equal tons recovered/salvaged plus tons disposed.

Monthly reports containing the above information in a format acceptable to the Contract Manager are due no later than 15 days after the last day of the month included in the report. Reports shall be signed by an authorized representative of the Contractor. Monthly reports prepared by the MRF containing all of the information above and in a format acceptable to the Contract Manager and transmitted by the required date with a letter signed by the Contractor's authorized representative will be acceptable.

7. Title of Improvements

All structures, constructed and maintained by the Contractor upon the County's right of way pursuant to the Contract, shall remain the ownership of the County. Upon termination or cancellation of contract, Contractor shall not perform any additional routine maintenance service, but shall complete any work in progress.

8. National Pollutant Discharge Elimination System

The Contractor shall not allow any debris from its operations under this Contract to be deposited into the storm drains and/or street gutters. Such debris is in violation of the NPDES regulations. According to the NPDES regulations, nothing shall be discharged into the storm drain system other than stormwater. The Contractor shall follow all NPDES regulations in accordance with the Contractor's Work Plan. The Contractor shall follow its Work Plan throughout the entire Contract unless otherwise approved in writing by the Contract Manager.

9. Lead Person

Contractor shall assign a lead person whose responsibility shall be to represent Contractor's operation in the field, and who shall serve as liaison between Contractor's crews in the field and the County. The lead person

shall spend as much time supervising the collection routes as is needed to accomplish the provisions of these Specifications.

The lead person shall be provided with a separate vehicle, other than a vehicle used for collection of waste. Within ten days of the award of this Contract, Contractor shall inform the Contract Manager of the name, title, and telephone number of the assigned lead person.

10. Specifications, Permits, and Inspections

As requested, Contract Manager will provide typical designs and specifications, as well as all necessary permits and inspections for the construction of any relocation or replacement bus stop shelter, including amenities as well as any bus bench or trash receptacle, including a description of materials to be used as shown in Exhibit F. Contractor shall submit final design for aforementioned facilities and amenities to Contract Manager for final approval prior to installation.

All removal, relocation, and installation work shall conform to the STANDARD SPECIFICATIONS FOR PUBLIC WORKS CONSTRUCTION latest edition. All work and workmanship deemed to be substandard or inadequate by the Contract Manager will be corrected or replaced at no cost to County.

11. Reports

Contractor shall submit monthly reports along with the invoice. The first monthly report shall be due no later than 15 days after the first month, commencing from the first day of operation.

The reports shall be submitted via fax to Mr. Fred Wong at (626) 979-5313, within 15 days of the end of the previous month or via mail to the County of Los Angeles Department of Public Works, Programs Development Division, Transit Operations Section, P.O. Box 1460, Alhambra, California 91802-1460, within the same due date as via fax unless otherwise notified by the Contract Manager. The person to whom the reports are to be addressed is subject to change. Pubic Works will notify the Contractor of any such change.

Monthly reports are as follows:

a. A comprehensive report of all repairs, removals, relocations, and replacements of bus stop shelters, benches, trash receptacles, and other bus stop amenities in the unincorporated areas of the County

as specified in Exhibit E. Reports shall include service date, location, reason for service, description of service, and any other information required by Contract Manager.

b. A detailed waste disposal report as defined under subsection F.6.g.2, Waste Collection and Reporting.

When Contractor submits monthly reports to the Contract Manager such reports shall be deemed timely only if delivered or postmarked on or before the due date. If reports are not received in a timely manner, County may withhold payment on Contractor's invoice until the receipt of the required reports.

In addition to the regular monthly reports, the Contractor shall provide a report every two months detailing test results for functionality of all stand-alone solar-powered light poles.

12. Routes and Changes

Contractor shall prepare and file with the Contract Manager within 30 days of the award of this Contract, a schedule for maintenance and trash collection. Each schedule should include a complete map of each route. As part of each schedule, Contractor shall provide Contract Manager detailed information as to how Contractor proposes to schedule on or around holidays. Said schedules shall be approved by the Contract Manager. The schedule, when approved by the Contract Manager, shall be maintained unless a change therein is first approved by the Contract Manager and notice thereof is given as hereinafter provided.

Thereafter, before any change in the maintenance schedule is made by Contractor, Contractor shall provide 10 working days prior written notice of the proposed change to the Contract Manager, along with the proposed revised maintenance schedule, together with a new map. No such change may be effected until first approved by the Contract Manager.

13. Public Convenience and Safety

Contractor's operations shall cause no unnecessary public inconvenience. The access right of the public in the streets shall be considered at all times.

Contractor shall provide all safety measures necessary to protect the public and his/her workers.

14. Monitoring

Periodic monitoring of the designated location's work will be made by the Contract Manager to assure compliance with this Contract.

15. Restoration of Site Upon Removal or Relocation

Upon removal or relocation of any bus stop amenities, the sites shall be restored by the Contractor to their original condition or to the satisfaction of the Contract Manager. All obstructions shall be removed and any holes shall be filled with material compatible with existing material.

16. Uniforms

All employees of Contractor shall be dressed with uniformity and in clean uniforms furnished by Contractor to the satisfaction of the Contract Manager. The uniform shall bear Contractor's name and logo, if applicable. Contractor shall maintain an array of uniforms in various sizes for use by new employees.

Contractor's employees shall not remove portions of their uniform while working under this Contract. No employee shall start work unless the employee is dressed in a clean uniform. Contractor shall furnish each employee a set of rain gear, which shall be carried in the vehicle for use in case of inclement weather.

17. Entering Private Property

Unless otherwise specified in this Contract or by the order of the Contract Manager, Contractor shall conduct all of its activities and operations within the confines of the County's right of way. Contractor shall not allow its employees to use private property for eating, coffee breaks, or any other reason or use water from such property without the written permission of the owner.

Contractor shall indemnify and hold the County harmless from all claims of damages occasioned by such work or activity, whether done in compliance with this section and with permission or in violation of this section without permission.

G. Alternative Bus Stop Amenities and Adjustments to price

If during the term of this Contract the listed materials including, but not limited to, bus stop shelters, bus benches, trash receptacles, and other bus stop amenities are no longer commercially available at costs reasonably similar to the costs incurred at time of bid, Contractor shall complete and submit the form included in Exhibit H for the Contract Manager's approval of these increased costs.

If the County requires the Contractor to maintain an alternative type or design of a bus stop amenity that did not exist at the time of the award of this Contract, Contractor shall submit the enclosed form in Exhibit H, indicating the revised cost of as-needed repair, replacement, relocation, and removal of such amenity for the Contract Manager's approval.

H. Pass-Through Costs and Extra Work

The County recognizes that there may be needed construction, installation, maintenance, repair or modification to bus stop shelters or other bus stop amenities not covered under this Contract and for which the Contractor is not compensated under **Form PW-2, Schedule of Prices**.

A couple of examples for pass-through costs are as follows:

- Modify or retrofit bus stop amenities.
- Add innovative features in accordance with transit needs or technological development. (i.e. Install real-time bus arriving information display, information booth, or other power source that conserves energy to operate shelters)

The County shall allow the Contractor to pass-through the amounts necessary to cover the following specific items only if the County has authorized the work in writing prior to the licensee's initiation of work for the item(s). Claims for payment of pass-through costs shall include all supporting documentation of costs, approvals, and copies of vendor invoices. In order to be eligible for pass-through costs for items not specifically mentioned in the Form PW-2, Schedule of Prices, the licensee must present the required scope of repairs to the Contract Manager, and the Contract Manager must approve the repairs in writing prior to the work commencing.

If Extra Work (emergency or unforeseen work) is necessary, the Contractor shall provide Public Works with a cost estimate, including the number of hours required for the work broken down by job classification. Public Works, at its sole discretion, may issue a Notice to Proceed to the Contractor for Extra Work. Extra Work shall conform to the requirements in subsection 3-3 of the "Standard Specifications for Public Works Construction, 2006 Edition," and the Public Works' "Additions and Amendments to the Standard Specifications for Public Works Construction, 2006 Edition," dated June 2006. Electrical repair work shall comply with the NEC requirements.

I. Responsibilities of Public Works

Public Works' responsibilities will include, but not be limited to, monitoring and inspecting Contractor's performance to ensure compliance with the Terms, Requirements, Specifications, and Conditions described herein.

Public Works will make monthly inspections of randomly selected shelters to ascertain the condition of shelters. A minimum of 10 percent of the shelters inspected on a quarterly basis shall meet the maintenance requirements indicated in Section I. Failure to comply with this requirement shall result in the assessment of liquidated damages as indicated in Section M of this scope. Before liquidated damages are assessed, the Contractor may provide a written explanation regarding justifiable reasons for the unacceptable condition, such as a community event that took place immediately prior to the inspection.

J. Utilities

The County will not provide utilities.

K. Storage Facilities

The County will not provide storage facilities for the Contractor. Contractor shall properly store all vehicles, equipment and materials, including, but not limited to, auxiliary shelters, benches, solar-powered lighting, trash receptacles and parts, accessories and materials necessary for repair, and replacement and maintenance of the equipment and County facilities, at the sole cost of the Contractor at its own facilities. Contractor shall be responsible for determining and storing the appropriate number of auxiliary units necessary to ensure the prompt replacement of damaged units.

L. Special Safety Requirements

All Contractor operators shall be expected to observe all applicable State of California Occupational Safety and Health Administration (Cal/OSHA) and Federal, State, and County safety requirements while performing these services. Suitable clothing, gloves, and shoes that meet CalOSHA requirements are required.

The Contractor shall keep fully informed of Federal and State laws and County ordinances and regulations that in any manner affect those employed in the work or the materials used in the work or in any way affect the conduct of the work. The Contractor shall at all times observe and comply with such laws, ordinances and regulations. The term work as used herein includes the construction and/or maintenance of the shelters, including solar panels, batteries, apparatus, benches, and trash receptacles as well as the collection, transportation, and disposal of waste at designated transit stops.

M. Liquidated Damages

1. In any case of the Contractor's failure to meet certain specified performance requirements, the County may, in lieu of other remedies provided by law or the Contract, assess liquidated damages in specified sums and deduct them from any regularly scheduled payment to the Contractor. However, neither the provision of a sum of liquidated damages for nonperformance or untimely or inadequate performance nor the County's acceptance of liquidated damages shall be construed to waive the County's right to reimbursement for damage to its property or indemnification against third-party claims.

2. The amounts of liquidated damages have been set in recognition of the following circumstances existing at the time of the formation of the Contract:

    a. All of the time limits and acts required to be done by both parties are of the essence of the Contract;

    b. The parties are both experienced in the performance of the Contract work;

    c. The Contract contains a reasonable statement of the work to be performed in order that the expectations of the parties to the Contract are realized. The expectation of the County is that the work will be performed with due care in a workmanlike, competent, timely, and cost-efficient manner while the expectation of the Contractor is a realization of a profit through the ability to perform the Contract work in accordance with the terms and conditions of the Contract at the Proposal price;

    d. The parties are not under any compulsion to contract;

    e. The Contractor's acceptance of the assessment of liquidated damages against it for unsatisfactory and late performance is by agreement and willingness to be bound as part of the consideration being offered to the County for the award of the Contract;

    f. It would be difficult for the County to prove the loss resulting from nonperformance or untimely, negligent, or inadequate performance of the work; and

    g. The liquidated sums specified represent a fair approximation of the damages incurred by the County resulting from the Contractor's failure to meet the performance standard as to each item for which an amount of liquidated damages is specified.

3. The Contractor shall pay Public Works liquidated damages in the sum of $100 for each consecutive calendar day that the Contractor fails to comply

with any requirements not addressed in Section M.4 listed below within the time specified unless otherwise provided in this scope.

4. All the time limits and acts are required to be done in accordance with this Contract and should Contractor fail to perform or complete the work required to be done set forth in this Contract, the County may assess liquidated damages through a separate invoice process as follows:

   a. Failure to remedy, within 24 hours after notification by the Contract Manager, an emergency repair of a bus stop amenity subject to a potential hazard, damage, or vandalism of an emergency nature, which is found to be justified by the Contract Manager - $250 per occurrence per day for bus stop shelter and $100 per occurrence per day for bus bench or trash receptacle as outlined in Section F.5.b.2.

   b. Failure to repair or replace damaged, faulty or exposed electrical components related to the illumination of the bus stop shelter and its immediate area within 24 hours after notification by the Contract Manager - $500 per occurrence per day as outlined in Section F.5.f, Electrical Work.

   c. Failure to repair or replace shelter lighting within 48 hours of notification by the Contract Manager - $100 per occurrence per day in Section F.5.g.

   d. Failure to recycle batteries used for solar lighting in accordance with all Federal, State and local regulations - $200 per occurrence as outlined in Section F.5.g.

   e. Failure to maintain the schedule for the manual collection of waste during the hours of service as defined in Section F.6.c - $50 per day per unit not collected on the scheduled day.

   f. Failure to replace leaking or damaged trash receptacles with similar trash receptacles within five working days of notification by the Contract Manager - $100 per each occurrence per day as outlined in Section F.5.b.3.

   g. Failure to remedy, within 24 hours after notification by the Contract Manager, an emergency removal of a bus stop amenity, which is found to be justified by the Contract Manager - $50 per each occurrence per day for bus bench or trash receptacle and $200 per each occurrence per day for bus stop shelter as outlined in Section F.5.c.3.

   h. Failure to perform all operations to remove or cover graffiti from all exterior surfaces of bus stop shelters, bus benches, trash

receptacles, and solar panels and apparatus, within 24 hours of notification by the Contract Manager - $50 per occurrence per day as defined in Section F.3, Graffiti Removal Services.

i. Failure to submit any required reports in the time frame as specified in the Contract - $100 per occurrence per day as outlined in Section F.6.g.2 and Section F.11, Reports.

j. Failure to maintain the shelters as required in Section F, thereby resulting in the County determining, as part of the random monthly monitoring, more than 10 percent of the shelters quarterly inspected are in an unacceptable condition - $500 per quarter

k. Failure to remedy a shelter found to be in an unacceptable condition within two days of receipt of notice from County - $50 per day per shelter.

N. Prevailing Wage

The Director of the Department of Industrial Relations of the State of California has ascertained the prevailing rate of per diem wages in dollars, based on a working day of eight hours, for each craft or type of worker or mechanic needed to execute any construction or maintenance contract which may be awarded by Public Works. The current prevailing wage rates as adopted by the Director of the Department of Industrial Relations are incorporated herein by reference and may be accessed at http://www.dir.ca.gov/.

The Contractor is required to pay the prevailing wage rate referred to above and is responsible for selecting the classification of workers, which will be required to perform this service in accordance with the Contractor's method of performing the work. Pursuant to Section 1775, of the Labor Code (State of California), Contractor shall forfeit $50 for each calendar day, or portion thereof, for each worker paid less than the stipulated prevailing wage rates for any public work done under this Contract or by any subcontractor.

O. Project Safety Official

The Contractor shall designate in writing a Project Safety Official who shall be thoroughly familiar with the Contractor's Injury and Illness Prevention Program and Code of Safe Practices. The Contractor's Project Safety Official shall be available at all times (24 hours a day, seven days a week, 365 days a year) to abate any potential safety hazards and shall have the authority and responsibility to shut down an operation, if necessary. Failure by the Contractor to provide the required Project Safety Official shall be grounds for the County to direct the cessation of all work activities and operations at no cost to the County until such time as the Contractor is in compliance.

P. Contractor's Quality Control Plan

The Contractor shall establish and maintain a Quality Control Plan to assure the requirements of this Contract are met. An updated copy shall be provided to the Contract Manager on this Contract's start date and as changes occur. The plan shall include, but not be limited to, the following:

1. It shall specify the activities to be inspected on either a scheduled or unscheduled basis, how often inspections will be accomplished, and the title of the individual(s) who will perform the inspection.

2. The methods for identifying and preventing deficiencies in the quality of service performed before the level of performance becomes unacceptable.

3. A file of all inspections conducted by Contractor and, if necessary, the corrective action taken. This documentation shall be made available as requested by the County during the term of this Contract.

4. The methods for continuing service to the County in the event of a strike of Contractor's employees.

P:\aspub\CONTRACT\BEN\TRANSITSTOP NORTH & SOUTH\2008 - JULY 2007\RFP\12 EXHIBIT A-SCOPE OF WORK-7.24-07.DOC

SERVICE CONTRACT GENERAL REQUIREMENTS

SECTION 1

INTERPRETATION OF CONTRACT

A. Ambiguities or Discrepancies

Both parties have either consulted or had the opportunity to consult with counsel regarding the terms of this Contract and are fully cognizant of all terms and conditions. Should there be any uncertainty, ambiguity, or discrepancy in the terms or provisions hereof, or should any misunderstanding arise as to the interpretation to be placed upon any position hereof or the applicability of the provisions hereunder, neither party shall be deemed as the drafter of this Contract and the uncertainty, ambiguity, or discrepancy shall not be construed against either party.

B. Definitions

Whenever in the Request for Proposals, Contract, Scope of Work, Specifications, Terms, Requirements, and/or Conditions the following terms are used, the intent and meaning shall be interpreted as follows:

Agreement. The written, signed accord covering the performance of the requested service.

Board. The Board of Supervisors of County of Los Angeles and Ex-Officio Board of Supervisors of the Los Angeles County Flood Control District.

Contract. The written agreement covering the performance of the service and the furnishing of labor, materials, supervision, and equipment in the performance of the service. The contract includes the Agreement, Scope of Work (Specifications), Exhibit B - Service Contract General Requirements, Exhibit C - Internal Revenue Service Notice 1015, Exhibit D - Safely Surrendered Baby Law Posters, and other appropriate exhibits and amendments. Included are all supplemental agreements amending or extending the service to be performed, which may be required to supply acceptable services specified herein.

Contractor. The person or persons, sole proprietor, partnership, joint venture, corporation, or other legal entity who has entered into an agreement with County to perform or execute the work covered by these this Contract.

Contract Work or Work. The entire contemplated work of maintenance and repair to be performed, and services rendered as prescribed in this Contract.

County. Includes County of Los Angeles, County of Los Angeles Department of Public Works, Los Angeles County Road Department, and/or Los Angeles County Engineer.

Day. Calendar day(s) unless otherwise specified.

Direct Employee. Worker employed by Contractor under Contractor's state and federal taxpayer identification.

Director. The Director of Public Works, County of Los Angeles, as used herein, includes the Road Commissioner, County of Los Angeles; County Engineer, County of Los Angeles; Chief Engineer, Los Angeles County Flood Control District; and/or authorized representative(s).

District. Los Angeles County Flood Control District, or Los Angeles County Waterworks Districts, or Los Angeles County Consolidated Sewer Maintenance District.

Employee Leasing. Any agreement to employ any worker, at any tier, that is neither a subcontract nor a direct employee relationship.

Fiscal Year. The 12 month period beginning July 1st and ending the following June 30th.

Maximum Contract Sum. The Maximum Contract Sum is the aggregate total amount of compensation authorized by the Board.

Proposal. The written materials that a Proposer submits in response to a solicitation document (Request for Proposals).

Proposer. Any individual, person or persons, sole proprietor, firm, partnership, joint venture, corporation, or other legal entity submitting a Proposal for the work, acting directly or through a duly authorized representative.

Public Works. County of Los Angeles Department of Public Works.

Solicitation. Request for Proposals, Invitation for Bids, Request for Statement of Qualifications, or Request for Quotation.

Specifications. The directions, provisions, and requirements contained herein, as supplemented by such special provisions as may be necessary pertaining to method, manner, and place of performing the work under this Contract.

Subcontract. An agreement by the contractor to employ a subcontractor at any tier; to employ or agree to employ a subcontractor, at any tier.

Subcontractor. Any individual, person or persons, sole proprietor, firm, partnership, joint venture, corporation, or other legal entity furnishing supplies, services of any nature, equipment, and/or materials to Contractor in furtherance of the Contractor's performance of this Contract, at any tier, under oral or written agreement.

C. Headings

The headings herein contained are for convenience and reference only and are not intended to define or limit the scope of any provision thereof.

SECTION 2

STANDARD TERMS AND CONDITIONS PERTAINING TO CONTRACT ADMINISTRATION

A. Amendments

1. For any change which affects the scope of work, contract sum, payments, or any term or condition included in this Contract, an amendment shall be prepared and executed by Contractor and the Board or if delegated by the Board, the Director and Contractor.

2. The Board or County's Chief Executive Officer or designee may require the addition and/or change of certain terms and conditions in this Contract during the term of this Contract. County reserves the right to add and/or change such provisions as required by the Board or the Chief Executive Officer. To implement such changes, an amendment to this Contract shall be prepared by Public Works for execution by Contractor and the Director.

3. County may, at its sole discretion, authorize extensions of time to this Contract's term. Contractor agrees that such extensions of time shall not change any other term or condition of this Contract during the period of such extensions. To implement an extension of time, an amendment to this Contract shall be prepared and executed by Contractor and the Board or if delegated by the Board, the Director and Contractor. To the extent that extensions of time for Contractor performance do not impact either scope or amount of this Contract, Public Works may, at its sole discretion, grant Contractor extensions of time provided; however, that the aggregate of all such extensions during the life of this Contract shall not exceed 120 days.

B. Assignment and Delegation

1. Contractor shall not assign its rights or delegate its duties under this Contract, or both, whether in whole or in part, without the prior written consent of County, in its discretion, and any attempted assignment or delegation without such consent shall be null and void. For purposes of this paragraph, County consent shall require a written amendment to this Contract, which is formally approved and executed by Contractor and the Board or if delegated by the Board, the Director and Contractor. Any payments by County to any approved delegate or assignee on any claim under this Contract shall be deductible, at County's sole discretion, against the claims which Contractor may have against County.

2. Shareholders, partners, members, or other equity holders of Contractor may transfer, sell, exchange, assign, or divest themselves of any interest they may have therein. However, in the event any such sale, transfer, exchange, assignment, or divestment is effected in such a way as to give majority control of Contractor to any person(s), corporation, partnership, or

legal entity other than the majority controlling interest therein at the time of execution of this Contract, such disposition is an assignment requiring the prior written consent of County in accordance with applicable provisions of this Contract.

3. Any assumption, assignment, delegation, or takeover of any of Contractor's duties, responsibilities, obligations, or performance of same by any entity other than Contractor, whether through assignment, subcontract, delegation, merger, buyout, or any other mechanism, with or without consideration for any reason whatsoever without County's express prior written approval, shall be a material breach of this Contract, which may result in the termination of this Contract. In the event of such termination, County shall be entitled to pursue the same remedies against Contractor as it could pursue in the event of default of Contractor.

C. Authorization Warranty

Contractor represents and warrants that the person(s) executing this Contract for Contractor is an authorized agent who has actual authority to bind Contractor to each and every term, condition, and obligation of this Contract and that all requirements of Contractor have been fulfilled to provide such actual authority.

D. Budget Reduction

In the event that the Board adopts, in any fiscal year, a County budget which provides for reduction in the salaries and benefits paid to the majority of County employees and imposes similar reductions with respect to County contracts, County reserves the right to reduce its payment obligation under this Contract correspondingly for that fiscal year and any subsequent fiscal year during the term of this Contract (including any extensions) and the services to be provided by Contractor under this Contract shall also be reduced correspondingly. County's notice to Contractor regarding said reduction in payment obligation shall be provided within 30 days of the Board's approval of such actions. Except as set forth in the preceding sentences, Contractor shall continue to provide all of the services set forth in this Contract.

E. Complaints

Contractor shall develop, maintain, and operate procedures for receiving, investigating, and responding to any complaints by any individual.

1. Within 12 business days after this Contract's effective date, Contractor shall provide County with Contractor's policy for receiving, investigating, and responding to any complaints by any individual.

2. County will review Contractor's policy and provide Contractor with approval of said plan or with requested changes.

3. If County requests changes in Contractor's policy, Contractor shall make such changes and resubmit the plan within five business days for County approval.

4. If, at any time, Contractor wishes to change Contractor's policy, Contractor shall submit proposed changes to County for approval before implementation.

5. Contractor shall preliminarily investigate all complaints and notify the Contract Manager of the status of the investigation within five business days of receiving the complaint.

6. When complaints cannot be resolved informally, a system of follow-through shall be instituted which adheres to formal plans for specific actions and strict time deadlines.

7. Copies of all written responses shall be sent to the Contract Manager within three business days of mailing to the complainant.

F. Compliance with Applicable Laws

1. Contractor shall comply with all applicable Federal, State, and local laws, rules, regulations, ordinances, or directives, and all provisions required thereby to be included in this Contract are hereby incorporated by reference.

2. Contractor shall defend, indemnify, and hold County harmless from and against any and all liability, damages, costs, and expenses, including, but not limited to, defense costs and attorneys' fees arising from or related to any violation on the part of Contractor or its employees, agents, or subcontractors of any such laws, rules, regulations, ordinances, or directives.

G. Compliance with Civil Rights Laws

Contractor hereby assures that it will comply with Subchapter VI of the Civil Rights Act of 1964, 42 USC Sections 2000 (e) (1) through 2000 (e) (17), to the end that no person shall, on the grounds of race, creed, color, sex, religion, ancestry, age, condition of physical disability, marital status, political affiliation, or national origin, be excluded from participation in, be denied the benefits of, or be otherwise subjected to discrimination under this Contract or under any project, program, or activity supported by this Contract. Contractor shall comply with its EEO Certification (Form PW-7).

H. Confidentiality

1. Contractor shall maintain the confidentiality of all records obtained from County under this Contract in accordance with all applicable Federal,

State, and local laws, ordinances, regulations, and directives relating to confidentiality.

2. Contractor shall inform all of its officers, employees, agents, and subcontractors providing services hereunder of the confidentiality provisions of this Contract.

I. Conflict of Interest

1. No County employee whose position with County enables such employee to influence the award of this Contract or any competing contract, and no spouse or economic dependent of such employee shall be employed in any capacity by Contractor or have any other direct or indirect financial interest in this Contract. No officer or employee of Contractor who may financially benefit from the performance of the work hereunder shall in any way participate in County's approval, or ongoing evaluation, of such work, or in any way attempt to unlawfully influence County's approval or ongoing evaluation of such work.

2. Contractor represents and warrants that it is aware of, and its authorized officers have read, the provisions of Los Angeles County Code, Section 2.180.010, "Certain Contracts Prohibited," and that execution of this Agreement will not violate those provisions. Contractor shall comply with all conflict of interest laws, ordinances, and regulations now in effect or hereafter to be enacted during the term of this Contract. Contractor warrants that it is not now aware of any facts that create a conflict of interest. If Contractor hereafter becomes aware of any facts that might reasonably be expected to create a conflict of interest, it shall immediately make full written disclosure of such facts to County. Full written disclosure shall include, but is not limited to, identification of all persons implicated and a complete description of all relevant circumstances. Failure to comply with the provisions of this paragraph shall be a material breach of this Contract subjecting Contractor to either contract termination for default or debarment proceedings or both. Contractor must sign and adhere to the "Conflict of Interest Certification" (Form PW-5).

J. Consideration of Hiring County Employees Targeted for Layoffs or Former County Employee on Reemployment List

Should Contractor require additional or replacement personnel after the effective date of this Contract to perform the services set forth herein, Contractor shall give first consideration for such employment openings to qualified permanent County employees who are targeted for layoff or qualified, former County employees who are on a re-employment list during the life of this Contract.

K. Consideration of Hiring GAIN and GROW Participants

1. Should Contractor require additional or replacement personnel after the effective date of this Contract, Contractor shall give consideration for any such employment openings to participants in County's Department of Public Social Services' Greater Avenues for Independence (GAIN) Program and General Relief Opportunity for Work (GROW) Program who meet Contractor's minimum qualifications for the open position. For this purpose, consideration shall mean that Contractor will interview qualified candidates. County will refer GAIN and GROW participants by category to Contractor.

2. In the event that both laid-off County employees and GAIN and GROW participants are available for hiring, County employees shall be given first priority.

L. Contractor's Acknowledgment of County's Commitment to Child Support Enforcement

Contractor acknowledges that County places a high priority on the enforcement of child support laws and the apprehension of child support evaders. Contractor understands that it is County's policy to encourage all County contractors to voluntarily post County's L.A.'s Most Wanted: Delinquent Parents poster in a prominent position at Contractor's place of business. County's Child Support Services Department will supply Contractor with the poster to be used.

M. Contractor's Charitable Activities Compliance

The Supervision of Trustees and Fundraisers for Charitable Purposes Act regulates entities receiving or raising charitable contributions. The "Nonprofit Integrity Act of 2004" (SB 1262, Chapter 919) increased Charitable Purposes Act requirements. By requiring contractors to complete the Charitable Contributions Certification (Form PW-12), County seeks to ensure that all County contractors which receive or raise charitable contributions comply with California law in order to protect County and its taxpayers. A contractor which receives or raises charitable contributions without complying with its obligations under California law commits a material breach subjecting it to either contract termination for default or debarment proceedings or both. (Los Angeles County Code Chapter 2.202)

N. Contractor's Warranty of Adherence to County's Child Support Compliance Program

1. Contractor acknowledges that County has established a goal of ensuring that all individuals who benefit financially from County through contracts are in compliance with their court-ordered child, family, and spousal support obligations in order to mitigate the economic burden otherwise imposed upon County and its taxpayers.

2. As required by County's Child Support Compliance Program (Los Angeles County Code Chapter 2.200), and without limiting Contractor's duty under this Contract to comply with all applicable provisions of law, Contractor warrants that it is now in compliance and shall during the term of this Contract maintain compliance with the employment and wage reporting requirements as required by the Federal Social Security Act (42 USC Section 653a) and California Unemployment Insurance Code Section 1088.5, and shall implement all lawfully served Wage and Earnings Withholding Orders or Child Support Services Department Notices of Wage and Earnings Assignment for Child, Family, or Spousal Support, pursuant to Code of Civil Procedure Section 706.031 and Family Code Section 5246(b).

O. County's Quality Assurance Plan

County or its agent will evaluate Contractor's performance under this Contract on not less than an annual basis. Such evaluation will include assessing Contractor's compliance with all this Contract's terms and conditions and performance standards. Contractor deficiencies which County determines are severe or continuing and that may place performance of this Contract in jeopardy, if not corrected, will be reported to the Board. The report will include improvement/corrective action measures taken by County and Contractor. If improvement does not occur consistent with the corrective action measures, County may terminate this Contract for default or impose other penalties as specified in this Contract.

P. Damage to County Facilities, Buildings, or Grounds

1. Contractor shall repair, or cause to be repaired, at its own cost, any and all damage to County facilities, buildings, or grounds caused by Contractor or employees or agents of Contractor.

2. Such repairs shall be made immediately after Contractor has become aware of such damage, but in no event later than 30 days after the occurrence. If Contractor fails to make timely repairs, County may make any necessary repairs. All costs incurred by County, as determined by County, for such repairs shall be repaid by Contractor by cash payment upon demand. County may deduct from any payment otherwise due Contractor for costs incurred by County to make such repairs.

Q. Employment Eligibility Verification

1. Contractor warrants that it fully complies with all Federal and State statutes and regulations regarding the employment of aliens and others and that all of its employees performing work under this Contract meet the citizenship or alien status requirements set forth in Federal and State statutes and regulations. Contractor shall obtain, from all covered

employees performing services hereunder, all verification and other documentation of employment eligibility status required by Federal and State statutes and regulations including, but not limited to, the Immigration Reform and Control Act of 1986 (P.L. 99-603), or as they currently exist and as they may be hereafter amended. Contractor shall retain all such documentation for all covered employees for the period prescribed by law.

2. Contractor shall indemnify, defend, and hold harmless, County, its Board, agents, officers, and employees from employer sanctions and any other liability which may be assessed against Contractor or County or both in connection with any alleged violation of Federal or State statutes or regulations pertaining to the eligibility for employment of persons performing services under this Contract.

R. Facsimile Representations

At the discretion of County, County may agree to regard facsimile representations of original signatures of Contractor's authorized officers, when appearing in appropriate places on the change notices and amendments prepared pursuant to this Exhibit's Amendments, and received via communications facilities, as legally sufficient evidence that such original signatures have been affixed to change notices and amendments to this Contract, such that the Contractor need not follow up facsimile transmissions of such documents with subsequent (nonfacsimile) transmission of "original" versions of such documents.

S. Fair Labor Standards

Contractor shall comply with all applicable provisions of the Federal Fair Labor Standards Act and shall indemnify, defend, and hold harmless County and its Board, agents, officers, and employees from any and all liability, including, but not limited to, wages, overtime pay, liquidated damages, penalties, court costs, and attorneys' fees arising under any wage and hour law, including, but not limited to, the Federal Fair Labor Standards Act, for work performed by Contractor's employees for which County may be found jointly or solely liable.

T. Governing Laws, Jurisdiction, and Venue

This Contract shall be governed by, and construed in accordance with the laws of the State of California. To the maximum extent permitted by applicable law, Contractor and County agree and consent to the exclusive jurisdiction of the courts of the State of California for all purposes concerning this Contract and further agree and consent that venue of any action brought in connection with or arising out of this Contract, shall be exclusively in the County of Los Angeles.

U. Nondiscrimination and Affirmative Action

1. Contractor certifies and agrees that all persons employed by it, its affiliates, subsidiaries, or holding companies are and shall be treated equally without regard to or because of race, color, religion, ancestry, national origin, sex, age, physical or mental disability, marital status, or political affiliation, in compliance with all applicable Federal and State antidiscrimination laws and regulations.

2. Contractor shall certify to, and comply with, the provisions of Contractor's EEO Certification (Form PW-7).

3. Contractor shall take affirmative action to ensure that applicants are employed, and that employees are treated during employment, without regard to race, color, religion, ancestry, national origin, sex, age, physical or mental disability, marital status, or political affiliation, in compliance with all applicable Federal and State antidiscrimination laws and regulations. Such action shall include, but not be limited to, employment, upgrading, demotion, transfer, recruitment or recruitment advertising, layoff or termination, rates of pay or other forms of compensation, and selection of training, including apprenticeship.

4. Contractor certifies and agrees that it will deal with its subcontractors, bidders, or vendors without regard to or because of race, color, religion, ancestry, national origin, sex, age, physical or mental disability, marital status, or political affiliation.

5. Contractor certifies and agrees that it, its affiliates, subsidiaries, or holding companies shall comply with all applicable Federal and State laws and regulations to the end that no person shall, on the grounds of race, color, religion, ancestry, national origin, sex, age, physical or mental disability, marital status, or political affiliation, be excluded from participation in, be denied the benefits of, or be otherwise subjected to discrimination under this Contract or under any project, program, or activity supported by this Contract.

6. Contractor shall allow County representatives access to Contractor's employment records during regular business hours to verify compliance with the provisions of this paragraph when so requested by County.

7. If County finds that any of the above provisions have been violated, such violation shall constitute a material breach of this Contract upon which County may terminate for default or suspend this Contract. While County reserves the right to determine independently that the antidiscrimination provisions of this Contract have been violated, in addition, a determination by the California Fair Employment Practices Commission or the Federal Equal Employment Opportunity Commission that Contractor has violated

Federal or State antidiscrimination laws or regulations shall constitute a finding by County that Contractor has violated the antidiscrimination provisions of this Contract.

8. The parties agree that in the event Contractor violates any of the antidiscrimination provisions of this Contract, County shall, at its sole option, be entitled to a sum of $500 for each violation pursuant to California Civil Code Section 1671 as liquidated damages in lieu of terminating or suspending this Contract.

V. Nonexclusivity

Nothing herein is intended nor shall be construed as creating any exclusive arrangement with Contractor. This Contract shall not restrict County from acquiring similar, equal, or like goods and/or services from other entities or sources.

W. No Payment for Services Provided Following Expiration/Termination of Contract

Contractor shall have no claim against County for payment of any money or reimbursement, of any kind whatsoever, for any service provided by Contractor after the expiration or other termination of this Contract. Should Contractor receive any such payment, it shall immediately notify County and shall immediately repay all such funds to County. Payment by County for services rendered after expiration/termination of this Contract shall not constitute a waiver of County's right to recover such payment from Contractor. This provision shall survive the expiration/termination of this Contract.

X. Notice of Delays

Except as otherwise provided under this Contract, when either party has knowledge that any actual or potential situation is delaying or threatens to delay the timely performance of this Contract, that party shall, within one business day, give notice thereof, including all relevant information with respect thereto, to the other party.

Y. Notice of Disputes

Contractor shall bring to the attention of the Contract Manager any dispute between County and Contractor regarding the performance of services as stated in this Contract. If the Contract Manager is not able to resolve the dispute, the Director will resolve it.

Z. Notice to Employees Regarding the Federal Earned Income Credit

Contractor shall notify its employees, and shall require each subcontractor to notify its employees, that they may be eligible for the Federal Earned Income Credit under the Federal income tax laws. Such notice shall be provided in

accordance with the requirements set forth in Internal Revenue Service Notice 1015 (Exhibit C).

AA. Notices

Notices desired or required to be given under these Specifications, Conditions, or Terms herein or any law now or hereafter in effect may, at the option of the party giving the same, be given by enclosing the same in a sealed envelope addressed to the party for whom intended and by depositing such envelope with postage prepaid with the United States Post Office and any such notice and the envelope containing the same shall be addressed to Contractor at its place of business, or such other place as may be hereinafter designated in writing by Contractor. The notices and envelopes containing the same to County shall be addressed to:

Chief, Administrative Services Division
County of Los Angeles Department of Public Works
P.O. Box 1460
Alhambra, CA 91802-1460

In the event of suspension or termination of this Contract, notices may also be given upon personal delivery to any person whose actual knowledge of such suspension or termination would be sufficient notice to Contractor. Actual knowledge of such suspension or termination by an individual contractor or by a copartner, if contractor is a partnership; or by the president, vice president, secretary, or general manager, if contractor is a corporation; or by the managing agent regularly in charge of the work on behalf of said contractor shall in any case be sufficient notice.

BB. Publicity

1. Contractor shall not disclose any details in connection with this Contract to any person or entity except as may be otherwise provided hereunder or required by law. However, in recognizing Contractor's need to identify its services and related clients to sustain itself, County shall not inhibit Contractor from publicizing its role under this Contract within the following conditions:

   a. Contractor shall develop all publicity material in a professional manner.

   b. During the term of this Contract, Contractor shall not, and shall not authorize another to, publish or disseminate commercial advertisements, press releases, feature articles, or other materials using the name of County without the prior written consent of the Contract Manager. County shall not unreasonably withhold such written consent.

c. Contractor may, without prior written consent of County, indicate in its proposals and sales materials that it has been awarded this Contract with County, provided that the requirements of this paragraph shall apply.

CC. Public Records Act

1. Any documents submitted by Contractor; all information obtained in connection with County's right to audit and inspect Contractor's documents, books, and accounting records pursuant to this Exhibit's Record Retention and Inspection/Audit Settlement, of this Contract; as well as those documents which were required to be submitted in response to the RFP used in the solicitation process for this Contract, become the exclusive property of County. All such documents become a matter of public record and shall be regarded as public records, except those documents that are marked "trade secret," "confidential," or "proprietary" and are deemed excluded from disclosure under Government Code 6250 et seq. (Public Records Act). County shall not in any way be liable or responsible for the disclosure of any such records including, with limitation, those so marked, if disclosure is required by law, or by an order issued by a court of competent jurisdiction.

2. In the event County is required to defend an action on a Public Records Act request for any of the aforementioned documents, information, books, records, and/or contents of a proposal marked "trade secret," "confidential," or "proprietary," Contractor agrees to defend and indemnify County from all costs and expenses, including reasonable attorney's fees, in connection with any requested action or liability arising under the Public Records Act.

DD. Record Retention and Inspection/Audit Settlement

Contractor shall maintain accurate and complete financial records of its activities and operations relating to this Contract in accordance with generally accepted accounting principles. Contractor shall also maintain accurate and complete employment and other records relating to its performance of this Contract. Contractor agrees that County, or its authorized representatives, shall have access to and the right to examine, audit, excerpt, copy, or transcribe any pertinent transaction, activity, or record relating to this Contract. All such material, including, but not limited to, all financial records, bank statements, cancelled checks, or other proof of payment, timecards, sign-in/sign-out sheets, and other time and employment records, and proprietary data and information, shall be kept and maintained by Contractor and shall be made available to County during the term of this Contract and for a period of five years thereafter unless County's written permission is given to dispose of any such material prior to such time. All such material shall be maintained by Contractor at a location in County, provided that if any such material is located outside County, then, at County's option, Contractor

shall pay County for travel, per diem, and other costs incurred by County to examine, audit, excerpt, copy, or transcribe such material at such other location.

1. In the event that an audit of Contractor is conducted specifically regarding this Contract by any Federal or State auditor, or by any auditor or accountant employed by Contractor or otherwise, then Contractor shall file a copy of such audit report with County's Auditor-Controller within 30 days of Contractor's receipt thereof, unless otherwise provided by applicable Federal or State law or under this Contract. Subject to applicable law, County shall make a reasonable effort to maintain the confidentiality of such audit report(s).

2. Failure on the part of Contractor to comply with any of the provisions of this paragraph shall constitute a material breach of this Contract upon which County may terminate for default or suspend this Contract.

3. If, at any time during the term of this Contract or within five years after the expiration or termination of this Contract, representatives of County conduct an audit of Contractor regarding the work performed under this Contract, and if such audit finds that County's dollar liability for any such work is less than payments made by County to Contractor, then the difference shall be either: a) repaid by Contractor to County by cash payment upon demand or b) at the sole option of County's Auditor-Controller, deducted from any amounts due to Contractor from County, whether under this Contract or otherwise. If such audit finds that County's dollar liability for such work is more than the payments made by County to Contractor, then the difference shall be paid to Contractor by County by cash payment, provided that in no event shall County's maximum obligation for this Contract exceed the funds appropriated by County for the purpose of this Contract.

4. In addition to the above, Contractor agrees, should County or its authorized representatives determine, in County's sole discretion, that it is necessary or appropriate to review a broader scope of Contractor's records (including, certain records related to non-County contracts) to enable County to evaluate Contractor's compliance with County's Living Wage Program, Contractor shall promptly and without delay provide to County, upon the written request of County or its authorized representatives, access to and the right to examine, audit, excerpt, copy, or transcribe any and all transactions, activities, or records relating to any of its employees who have provided services to County under this Contract, including without limitation, records relating to work performed by said employees on Contractor's non-County contracts. Contractor further acknowledges that the foregoing requirement in this paragraph relative to Contractor's employees who have provided services to County under this Contract is for the purpose of enabling County in its discretion to verify Contractor's full compliance with and adherence to California labor laws and County's Living Wage Program. All such materials and information, including, but not limited to, all financial

records, bank statements, cancelled checks or other proof of payment, timecards, sign-in/sign-out sheets, and other time and employment records, and proprietary data and information, shall be kept and maintained by Contractor and shall be made available to County during the term of this Contract and for a period of five years thereafter unless County's written permission is given to dispose of any such materials and information prior to such time. All such materials and information shall be maintained by Contractor at a location in County, provided that if any such materials and information is located outside County, then, at County's option, Contractor shall pay County for travel, per diem, and other costs incurred by County to examine, audit, excerpt, copy, or transcribe such materials and information at such other location.

EE. Recycled-Content Paper Products

Consistent with Board policy to reduce the amount of solid waste deposited at County landfills, Contractor agrees to use recycled-content paper to the maximum extent possible under this Contract.

FF. Subcontracting

The requirements of this Contract may not be subcontracted by Contractor without the advance written approval of County. Any attempt by Contractor to subcontract without the prior written consent of County may be deemed a material breach of this Contract and the County may terminate for this Contract default.

1. If Contractor desires to subcontract, Contractor shall provide the following information promptly at County's request:

   a. A description of the work to be performed by the subcontractor;

   b. A draft copy of the proposed subcontract; and

   c. Other pertinent information and/or certifications requested by County.

2. Contractor shall indemnify and hold County harmless with respect to the activities of each and every subcontractor in the same manner and to the same degree as if such subcontractor(s) were Contractor employees.

3. Contractor shall remain fully responsible for all performances required of it under this Contract, including those that the Contractor has determined to subcontract, notwithstanding County's approval of Contractor's proposed subcontract.

4. County's consent to subcontract shall not waive County's right to prior and continuing approval of any and all personnel, including subcontractor

employees, providing services under this Contract. Contractor is responsible to notify its subcontractors of this County right.

5. County's Contract Manager is authorized to act for and on behalf of County with respect to approval of any subcontract and subcontractor employees.

6. Contractor shall be solely liable and responsible for all payments or other compensation to all subcontractors and their officers, employees, agents, and successors in interest arising through services performed hereunder, notwithstanding County's consent to subcontract.

7. Contractor shall obtain certificates of insurance, which establish that the subcontractor maintains all the programs of insurance required by County from each approved subcontractor. Contractor shall ensure delivery of all such documents to Administrative Services Division, P.O. Box 1460, Alhambra, California 91802-1460, before any subcontractor employee may perform any work hereunder.

8. Employee Leasing is prohibited.

GG. Validity

If any provision of this Contract or the application thereof to any person or circumstance is held invalid, the remainder of this Contract and the application of such provision to other persons or circumstances shall not be affected thereby.

HH. Waiver

No waiver by County of any breach of any provision of this Contract shall constitute a waiver of any other breach of said provision or of any other provision of this Contract. Failure of County to enforce at anytime, or from time to time, any provision of this Contract shall not be construed as a waiver thereof.

II. Warranty Against Contingent Fees

1. Contractor warrants that no person or selling agency has been employed or retained to solicit or secure this Contract upon an agreement or understanding for a commission, percentage, brokerage, or contingent fee, excepting bona fide employees or bona fide established commercial or selling agencies maintained by Contractor for the purpose of securing business.

2. For breach of this warranty, County shall have the right, in its sole discretion, to terminate this Contract for default, deduct from amounts owing to the Contractor, or otherwise recover, the full amount of such commission, percentage, brokerage, or contingent fee.

SECTION 3

TERMINATIONS

A. Termination for Breach of Warranty to Maintain Compliance with County's Child Support Compliance Program

Failure of Contractor to maintain compliance with the requirements set forth in this Exhibit's Contractor's Warranty of Adherence to County's Child Support Compliance Program shall constitute a default under this Contract. Without limiting the rights and remedies available to County under any other provision of this Contract, failure of Contractor to cure such default within 90 calendar days of written notice shall be grounds upon which the County may terminate this Contract pursuant to this Exhibit's Termination for Default, and pursue debarment of Contractor pursuant to Los Angeles County Code Chapter 2.202.

B. Termination for Convenience

1. This Contract may be terminated, in whole or in part, from time to time, when such action is deemed by County, in its sole discretion, to be in its best interest. Termination of work hereunder shall be effected by notice of termination to Contractor specifying the extent to which performance of work is terminated and the date upon which such termination becomes effective. The date upon which such termination becomes effective shall be no less than 10 days after the notice is sent.

2. After receipt of a notice of termination and except as otherwise directed by County, Contractor shall:

   a. Stop work under this Contract on the date and to the extent specified in such notice, and

   b. Complete performance of such part of the work as shall not have been terminated by such notice.

3. All material including books, records, documents, or other evidence bearing on the costs and expenses of Contractor under this Contract shall be maintained by Contractor in accordance with this Exhibit's Record Retention and Inspection/Audit Settlement.

4. If this Contract is terminated, Contractor shall complete within the Director's termination date contain within the Notice of Termination, those items of work which are in various stages of completion, which the Director has advised the Contractor are necessary to bring the work to a timely, logical, and orderly end. Reports, samples, and other materials prepared by Contractor under this Contract shall be delivered to County upon request and shall become the property of County.

C. Termination for Default

1. County may, by written notice to Contractor, terminate the whole or any part of this Contract, if, in the judgment of the Contract Manager:

   a. Contractor has materially breached this Contract; or

   b. Contractor fails to timely provide and/or satisfactorily perform any task, deliverable, service, or other work required under this Contract, or

   c. Contractor fails to demonstrate a high probability of timely fulfillment of performance requirements under this Contract, or of any obligations of this Contract and in either case, fails to demonstrate convincing progress toward a cure within five working days (or such longer period as County may authorize in writing) after receipt of written notice from County specifying such failure.

2. In the event County terminates this Contract in whole or in part pursuant to this paragraph, County may procure, upon such terms and in such manner, as County may deem appropriate, goods and services similar to those so terminated. Contractor shall be liable to County for any and all excess costs incurred by County, as determined by County, for such similar goods and services. Contractor shall continue the performance of this Contract to the extent not terminated under the provisions of this paragraph.

3. Except with respect to defaults of any subcontractor, Contractor shall not be liable for any excess costs of the type identified in subparagraph "2" above, if its failure to perform this Contract arises out of causes beyond the control and without the fault or negligence of Contractor. Such causes may include, but are not limited to, acts of God or of the public enemy, acts of County in either its sovereign or contractual capacity, acts of the Federal or State government in its sovereign capacity, fires, floods, epidemics, quarantine restrictions, strikes, freight embargoes, and unusually severe weather; but in every case, the failure to perform must be beyond the control and without the fault or negligence of Contractor. If the failure to perform is caused by the default of a subcontractor, and if such default arises out of causes beyond the control of both Contractor and subcontractor, and without the fault or negligence of either of them, Contractor shall not be liable for any such excess costs for failure to perform, unless the goods or services to be furnished by the subcontractor were obtainable from other sources in sufficient time to permit Contractor to meet the required delivery schedule.

4. If, after County has given notice of termination under the provisions of this paragraph, it is determined by County that Contractor was not in default

under the provisions of this paragraph or that the default was excusable under the provisions of this paragraph, the rights and obligations of the parties shall be the same as if the notice of termination had been issued pursuant to this Exhibit's Termination for Convenience.

5. The rights and remedies of County provided in this paragraph shall not be exclusive and are in addition to any other rights and remedies provided by law or under this Contract.

6. As used herein, the terms "subcontractor" and "subcontractors" mean subcontractor at any tier.

D. Termination for Improper Consideration

1. County may, by written notice to Contractor, immediately terminate the right of Contractor to proceed under this Contract if it is found that consideration, in any form, was offered or given by Contractor, either directly or through an intermediary, to any County officer, employee, or agent with the intent of securing this Contract or securing favorable treatment with respect to the award, amendment, extension of this Contract, or the making of any determinations with respect to Contractor's performance pursuant to this Contract. In the event of such termination, County shall be entitled to pursue that same remedies against Contractor as it could pursue in the event of default by Contractor.

2. Contractor shall immediately report any attempt by a County officer or employee to solicit such improper consideration. The report shall be made either to County manager charged with the supervision of the employee or to County Auditor-Controller's Employee Fraud Hotline at (800) 554-6861.

3. Among other items, such improper consideration may take the form of cash; discounts; services; the provision of travel, entertainment, or tangible gifts.

E. Termination for Insolvency

1. County may terminate this Contract forthwith in the event of the occurrence of any of the following:

   a. Insolvency of Contractor. Contractor shall be deemed to be insolvent if it has ceased to pay its debts for at least 60 days in the ordinary course of business or cannot pay its debts as they become due, whether or not a petition has been filed under the Federal Bankruptcy Code, and whether or not Contractor is insolvent within the meaning of the Federal Bankruptcy Code;

b. The filing of a voluntary or involuntary bankruptcy petition relative to Contractor under the Federal Bankruptcy Code;

c. The appointment of a bankruptcy Receiver or Trustee for Contractor; or

d. The execution by Contractor of a general assignment for the benefits of creditors.

2. The rights and remedies of County provided in this paragraph shall not be exclusive and are in addition to any other rights and remedies provided by law or under this Contract.

F. Termination for Nonadherence to County Lobbyists Ordinance

Contractor, and each County lobbyist or County lobbying firm as defined in Los Angeles County Code Section 2.160.010, retained by Contractor, shall fully comply with County's Lobbyist Ordinance, Los Angeles County Code Chapter 2.160. Failure on the part of Contractor or any County Lobbyists or County Lobbying firm retained by Contractor to fully comply with County's Lobbyist Ordinance shall constitute a material breach of this Contract, upon which County may in its sole discretion, immediately terminate for default or suspend this Contract.

G. Termination for Nonappropriation of Funds

Notwithstanding any other provision of this Contract, County shall not be obligated for Contractor's performance hereunder or by any provision of this Contract during any of County's future fiscal years unless and until the Board appropriates funds for this Contract in County's budget for each such future fiscal year. In the event that funds are not appropriated for this Contract, then this Contract shall terminate as of June 30 of the last fiscal year for which funds were appropriated. County will notify Contractor in writing of any such non-allocation of funds at the earliest possible date.

SECTION 4

GENERAL CONDITIONS OF CONTRACT WORK

A. Authority of Public Works and Inspection

The Director will have the final authority in all matters affecting the work covered by this Contract's Terms, Requirement, Conditions, and Specifications. On all questions relating to work acceptability or interpretations of these Terms, Requirements, Conditions, and Specifications, the decision of the Director will be final.

B. Cooperation

Contractor shall cooperate with Public Works' forces engaged in any other activities at the jobsite. Contractor shall carry out all work in a diligent manner and according to instructions of the Director.

C. Cooperation and Collateral Work

Contractor shall perform work as directed by the Director. The Director will be supported by other Public Works personnel in assuring satisfactory performance of the work under these Specifications and that satisfactory contract controls and conditions are maintained.

D. Equipment, Labor, Supervision, and Materials

All equipment, labor, supervision, and materials required to accomplish this Contract, except as might be specifically outlined in other sections, shall be provided by Contractor.

E. Gratuitous Work

Contractor agrees that should work be performed outside the Scope of Work indicated and without Public Works' prior written approval in accordance with this Exhibit's Amendments, such work shall be deemed to be a gratuitous effort by Contractor, and Contractor shall have no claim, therefor, against County.

F. Jobsite Safety

Contractor shall be solely responsible for ensuring that all work performed under this Contract is performed in strict compliance with all applicable Federal, State, and local occupational safety regulations. Contractor shall provide at its expense all safeguards, safety devices, and protective equipment and shall take any and all actions appropriate to providing a safe jobsite.

G. Labor

No person shall be employed on any work under this Contract who is found to be intemperate, troublesome, disorderly, or is otherwise objectionable to Public Works. Any such person shall be reassigned immediately and not again employed on Public Works' projects or providing services.

H. Labor Law Compliance

Contractor, its agents, and employees shall be bound by and shall comply with all applicable provisions of the Labor Code of the State of California as well as all other applicable Federal, State, and local laws related to labor. Contractor shall comply with Labor Code Section 1777.5 with respect to the employment of apprentices.

I. Overtime

Eight hours labor constitutes a legal day's work. Work in excess thereof, or greater than 40 hours during any one week, shall be permitted only as authorized by and in accordance with Labor Code Section 1815 et seq.

J. Permits/Licenses

Contractor shall be fully responsible for possessing or obtaining all permits/licenses, except as might be specifically outlined in other sections, from the appropriate Federal, State, or local authorities relating to work to be performed under this Contract.

K. Prohibition Against Use of Child Labor

1. Contractor shall:

   a. Not knowingly sell or supply to County any products, goods, supply, or other personal property manufactured in violation of child labor standards set by the International Labor Organization through its 1973 Convention Concerning Minimum Age for Employment;

   b. Upon request by County, identify the country/countries of origin of any products, goods, supplies, or other personal property Contractor sells or supplies to County;

   c. Upon request by County, provide to County the manufacturer's certification of compliance with all international child labor conventions; and

   d. Should County discover that any products, goods, supplies, or other personal property sold or supplied by Contractor to County are produced in violation of any international child labor

conventions, Contractor shall immediately provide an alternative, compliant source of supply.

2. Failure by Contractor to comply with provisions of this paragraph will constitute a material breach of this Contract and will be grounds for immediate termination of this Contract for default.

L. Public Convenience

Contractor shall so conduct operations to cause the least possible obstruction and inconvenience to public traffic or disruption to the peace and quiet of the area within which the work is being performed.

M. Public Safety

It shall be Contractor's responsibility to maintain security against public hazards at all times while performing work at Public Works' jobsites.

N. Quality of Work

Contractor shall provide the County high and consistent quality work under this Contract and which is at least equivalent to that which Contractor provides to all other clients it serves. All work shall be executed by experienced and well-trained workers. All work shall be under supervision of a well-qualified supervisor. Contractor also agrees that work shall be furnished in a professional manner and according to these Specifications.

O. Quantities of Work

Contractor shall be allowed no claims for anticipated profits or for any damages of any sort because of any difference between the work estimated by Contractor in responding to County's solicitation and actual quantities of work done under this Contract or for work decreased or eliminated by County.

P. Safety Requirements

Contractor shall be responsible for the safety of equipment, material, and personnel under Contractor's jurisdiction during the work.

Q. Storage of Material and Equipment

Contractor shall not store material or equipment at the jobsite, except as might be specifically authorized by this Contract. County will not be liable or responsible for any damage, by whatever means, or for the theft of Contractor's material or equipment from any jobsite.

R. Transportation

County will not provide transportation to and from the jobsite and will not provide travel around the limits of the jobsite.

S. Work Area Controls

1. Contractor shall comply with all applicable laws and regulations. Contractor shall maintain work area in a neat, orderly, clean, and safe manner. Contractor shall avoid spreading out equipment excessively. Location and layout of all equipment and materials at each jobsite will be subject to the Contract Manager's approval.

2. Contractor shall be responsible for the security of any and all of Public Works/County facilities in its care. Contractor shall provide protection against vandalism and accidental and malicious damage, both during working and nonworking hours.

SECTION 5

INDEMNIFICATION AND INSURANCE REQUIREMENTS

A. Independent Contractor Status

1. This Contract is by and between County and Contractor and is not intended, and shall not be construed, to create the relationship of agent, servant, employee, partnership, joint venture, or association, as between County and Contractor. The employees and agents of one party shall not be, or be construed to be, the employees or agents of the other party for any purpose whatsoever.

2. Contractor shall be solely liable and responsible for providing to, or on behalf of, all persons performing work pursuant to this Contract all compensation and benefits. County shall have no liability or responsibility for the payment of any salaries, wages, unemployment benefits, disability benefits, Federal, State, or local taxes, or other compensation, benefits, or taxes for any personnel provided by or on behalf of Contractor.

3. Contractor understands and agrees that all persons performing work pursuant to this Contract are, for purposes of Workers' Compensation liability, solely employees of Contractor and not employees of County. Contractor shall be solely liable and responsible for furnishing any and all Workers' Compensation benefits to any person as a result of any injuries arising from or connected with any work performed by or on behalf of Contractor pursuant to this Contract.

B. Indemnification

Contractor shall indemnify, defend, and hold harmless County, its Special Districts, elected and appointed officers, employees, and agents from and against any and all liability, including, but not limited to, demands, claims, actions, fees, costs, and expenses of any nature whatsoever (including attorney and expert witness fees), arising from or connected with Contractor's acts and/or omissions arising from and/or relating to this Contract.

C. Workplace Safety Indemnification

In addition to and without limiting the indemnification required by this Exhibit's Section 5.B (above), and to the extent allowed by law, Contractor agrees to defend, indemnify, and hold harmless County, its Board, Special Districts, officers, employees, and agents from and against any and all investigations, complaints, citations, liability, expense (including defense costs and legal fees), claims, and/or causes of action for damages of any nature whatsoever, including, but not limited to, injury or death to employees of Contractor, its subcontractors or County, attributable to any alleged act or omission of Contractor and/or its subcontractors which is in violation of any Cal/OSHA regulation. The obligation to defend,

indemnify, and hold harmless County includes all investigations and proceedings associated with purported violations of Section 336.10 of Title 8 of the California Code of Regulations pertaining to multiemployer worksites. Contractor shall not be obligated to indemnify for liability and expenses arising from the active negligence of County. County may deduct from any payment otherwise due Contractor any costs incurred or anticipated to be incurred by County, including legal fees and staff costs, associated with any investigation or enforcement proceeding brought by Cal/OSHA arising out of the work being performed by Contractor under this Contract.

D. General Insurance Requirements

1. Without limiting Contractor's indemnification of County and during the term of this Contract, Contractor shall provide and maintain, and shall require all of its subcontractors to maintain, the following programs of insurance specified in this Contract. Such insurance shall be primary to and not contributing with any other insurance or self-insurance programs maintained by County. Such coverage shall be provided and maintained at Contractor's own expense.

2. Evidence of Insurance - Certificate(s) or other evidence of coverage satisfactory to County shall be delivered to Administrative Services Division, P.O. Box 1460, Alhambra, California 91802-1460, prior to commencing work under this Contract. Such certificates or other evidence shall:

   a. Specifically identify this Contract;

   b. Clearly evidence all coverage required in this Contract;

   c. Contain the express condition that County is to be given written notice by mail at least 30 days in advance of cancellation for all policies evidenced on the certificate of insurance;

   d. Include copies of the additional insured endorsement to the commercial general liability policies, adding County, its Special Districts, its officials, officers, and employees as insureds for all activities arising from this Contract; and

   e. Identify any deductibles or self-insured retentions for County's approval. County retains the right to require Contractor to reduce or eliminate such deductibles or self-insurance retentions as they apply to County, or require Contractor to provide a bond guaranteeing payment of all such retained losses and related costs, including, but not limited to, expenses or fees, or both, related to investigations, claims administrations, and legal defense. Such bond shall be executed by a corporate surety licensed to transact business in the State of California.

3. Insurer Financial Rating: Insurance is to be provided by an insurance company acceptable to County with an A. M. Best rating of not less than A:VII, unless otherwise approved by County.

4. Failure to Maintain Coverage: Failure by Contractor to maintain the required insurance, or to provide evidence of insurance coverage acceptable to County, shall constitute a material breach of this Contract upon which County may immediately terminate or suspend this Contract. County, at its sole option, may obtain damages from Contractor resulting from said breach. Alternatively, County may purchase such required insurance coverage, and without further notice to Contractor, County may deduct from sums due to Contractor any premium costs advanced by County for such insurance.

5. Notification of Incidents, Claims, or Suits: Contractor shall report to County's Contract Manager:

   a. Any accident or incident relating to work performed under this Contract which involves injury or property damage which may result in the filing of a claim or lawsuit against Contractor and/or County. Such report shall be made in writing within 24 hours of occurrence.

   b. Any third-party claim or lawsuit filed against Contractor arising from or related to services performed by Contractor under this Contract.

   c. Any injury to a Contractor's employee which occurs on County property. This report shall be submitted on a County "Non-employee Injury Report" to the Contract Manager.

   d. Any loss, disappearance, destruction, misuse, or theft of any kind whatsoever of County property, monies, or securities entrusted to Contractor under the terms of this Contract.

E. <u>Compensation for County Costs</u>

In the event that Contractor fails to comply with any of the indemnification or insurance requirements of this Contract, and such failure to comply results in any costs to County, Contractor shall pay full compensation for all costs incurred by County.

F. <u>Insurance Coverage Requirements for Subcontractors</u>

Contractor shall ensure any and all subcontractors performing services under this Contract meet the insurance requirements of this Contract by either:

1. Contractor providing evidence of insurance covering the activities of subcontractor; or

2. Contractor providing evidence submitted by subcontractors evidencing that subcontractors maintain the required insurance coverage. County retains the right to obtain copies of evidence of subcontractor insurance coverage at any time.

G. Insurance Coverage Requirements

1. General Liability insurance (written on ISO policy form CG 00 01 or its equivalent) with limits of not less than the following. (Can be met by a combination of primary and excess insurance coverage):

a.	General Aggregate:	$2 million
b.	Products/Completed Operations Aggregate:	$1 million
c.	Personal and Advertising Injury:	$1 million
d.	Each Occurrence:	$1 million

2. Automobile Liability insurance (written on ISO policy form CA 00 01 or its equivalent) with a limit of liability of not less than $1 million for each accident. Such insurance shall include coverage for all "owned," "nonowned," and "hired" vehicles, or coverage for "any auto." (Can be met by a combination of primary and excess insurance coverage):

3. Workers' Compensation and Employers' Liability insurance providing workers' compensation benefits, as required by the Labor Code of the State of California or by any other state, and for which Contractor is responsible. If Contractor's employees will be engaged in maritime employment, coverage shall provide workers' compensation benefits as required by the U.S. Longshore and Harbor Workers' Compensation Act, Jones Act, or any other Federal law for which Contractor is responsible.

   In all cases, the above insurance also shall include Employers' Liability coverage with limits of not less than the following:

a.	Each Accident:	$1 million
b.	Disease - policy limit:	$1 million
c.	Disease - each employee:	$1 million

   As a condition precedent to its performance pursuant to this Contract, Contractor, by and through its execution of this Contract, certifies that it is aware of, and understands, the provisions of Section 3700 of the Labor Code, which requires every employer to be insured against liability of Workers' Compensation or to undertake self-insurance in accordance with

those provisions before commencing the performance of work under this Contract, and agrees to fully comply with said provisions.

SECTION 6

CONTRACTOR RESPONSIBILITY AND DEBARMENT

A. Responsible Contractor

A responsible Contractor is a Contractor who has demonstrated the attribute of trustworthiness as well as quality, fitness, capacity, and experience to satisfactorily perform the contract. It is County's policy to conduct business only with responsible contractors.

B. Chapter 2.202 of County Code

Contractor is hereby notified that, in accordance with Chapter 2.202 of County Code, if County acquires information concerning the performance of Contractor on this or other contracts which indicates that Contractor is not responsible, County may, in addition to other remedies provided in this Contract, debar Contractor from bidding or proposing on, being awarded, and/or performing work on County contracts for a specified period of time, which generally will not exceed five years but may exceed five years or be permanent if warranted by the circumstances, and terminate any or all existing contracts Contractor may have with County.

C. Nonresponsible Contractor

County may debar a contractor if the Board finds, in its discretion, that Contractor has done any of the following: (1) violated any term of a contract with County or a nonprofit corporation created by County; (2) committed an act or omission which negatively reflects on Contractor's quality, fitness, or capacity to perform a contract with County, any other public entity, or a nonprofit corporation created by County, or engaged in a pattern or practice which negatively reflects on same; (3) committed an act or offense which indicates a lack of business integrity or business honesty; or (4) made or submitted a false claim against County or any other public entity.

D. Contractor Hearing Board

1. If there is evidence that Contractor may be subject to debarment, Public Works will notify Contractor in writing of the evidence which is the basis for the proposed debarment and will advise Contractor of the scheduled date for a debarment hearing before Contractor Hearing Board.

2. Contractor Hearing Board will conduct a hearing where evidence on the proposed debarment is presented. Contractor and/or Contractor's representative shall be given an opportunity to submit evidence at that hearing. After the hearing, Contractor Hearing Board will prepare a tentative proposed decision, which shall contain a recommendation regarding whether Contractor should be debarred, and, if so, the

appropriate length of time of the debarment. Contractor and Public Works shall be provided an opportunity to object to the tentative proposed decision prior to its presentation to the Board.

3. After consideration of any objections, or if no objections are submitted, a record of the hearing, the proposed decision, and any other recommendation of Contractor Hearing Board shall be presented to the Board. The Board shall have the right to modify, deny, or adopt the proposed decision and recommendation of Contractor Hearing Board.

4. If a contractor has been debarred for a period longer than five years, that contractor may, after the debarment has been in effect for at least five years, submit a written request for review of the debarment determination to reduce the period of debarment or terminate the debarment. County may, in its discretion, reduce the period of debarment or terminate the debarment if it finds that Contractor has adequately demonstrated one or more of the following: (1) elimination of the grounds for which the debarment was imposed; (2) a bona fide change in ownership or management; (3) material evidence discovered after debarment was imposed; or (4) any other reason that is in the best interests of County.

5. Contractor Hearing Board will consider a request for review of a debarment determination only where (1) Contractor has been debarred for a period longer than five years; (2) the debarment has been in effect for at least five years; and (3) the request is in writing, states one or more of the grounds for reduction of the debarment period or termination of the debarment, and includes supporting documentation. Upon receiving an appropriate request, Contractor Hearing Board will provide notice of the hearing on the request. At the hearing, Contractor Hearing Board shall conduct a hearing where evidence on the proposed reduction of debarment period or termination of debarment is presented. This hearing shall be conducted and the request for review decided by Contractor Hearing Board pursuant to the same procedure as for a debarment hearing.

6. Contractor Hearing Board's proposed decision shall contain a recommendation on the request to reduce the period of debarment or terminate the debarment. Contractor Hearing Board shall present its proposed decision and recommendation to the Board. The Board shall have the right to modify, deny, or adopt the proposed decision and recommendation of Contractor Hearing Board.

E. <u>Subcontractors of Contractor</u>

These terms shall also apply to subcontractors of County contractors.

SECTION 7

COMPLIANCE WITH COUNTY'S JURY SERVICE PROGRAM

A. Jury Service Program

This Contract is subject to the provisions of County's ordinance entitled Contractor Employee Jury Service (Jury Service Program) as codified in Sections 2.203.010 through 2.203.090 of the Los Angeles County Code.

B. Written Employee Jury Service Policy

1. Unless Contractor has demonstrated to County's satisfaction either that Contractor is not a "Contractor" as defined under the Jury Service Program (Section 2.203.020 of County Code) or that Contractor qualifies for an exception to the Jury Service Program (Section 2.203.070 of County Code), Contractor shall have and adhere to a written policy that provides that its Employees shall receive from Contractor, on an annual basis, no less than five days of regular pay for actual jury service. The policy may provide that Employee deposit any fees received for such jury service with Contractor or that Contractor deduct from the Employee's regular pay the fees received for jury service.

2. For purposes of this Section, "Contractor" means a person, partnership, corporation, or other entity which has a contract with County or a subcontract with a County contractor and has received or will receive an aggregate sum of $50,000 or more in any 12-month period under one or more County contracts or subcontracts. "Employee" means any California resident who is a full-time employee of Contractor. "Full-time" means 40 hours or more worked per week, or a lesser number of hours if: 1) the lesser number is a recognized industry standard as determined by County, or 2) Contractor has a long-standing practice that defines the lesser number of hours as full-time. Full-time employees providing short-term, temporary services of 90 days or less within a 12-month period are not considered full-time for purposes of the Jury Service Program. If Contractor uses any subcontractor to perform services for County under this Contract, the subcontractor shall also be subject to the provisions of this Section. The provisions of this Section shall be inserted into any such subcontract agreement and a copy of the Jury Service Program shall be attached to the agreement.

3. If Contractor is not required to comply with the Jury Service Program when this Contract commences, Contractor shall have a continuing obligation to review the applicability of its "exception status" from the Jury Service Program, and Contractor shall immediately notify County if Contractor at any time either comes within the Jury Service Program's definition of "Contractor" or if Contractor no longer qualifies for an exception to the

Jury Service Program. In either event, Contractor shall immediately implement a written policy consistent with the Jury Service Program. County may also require, at any time during this Contract and at its sole discretion, that Contractor demonstrate to County's satisfaction that Contractor either continues to remain outside of the Jury Service Program's definition of "Contractor" and/or that Contractor continues to qualify for an exception to the Jury Service Program.

4. Contractor's violation of this Section of this Contract may constitute a material breach of this Contract. In the event of such material breach, County may, in its sole discretion, terminate this Contract and/or bar Contractor from the award of future County contracts for a period of time consistent with the seriousness of the breach.

SECTION 8

SAFELY SURRENDERED BABY LAW PROGRAM

A. Contractor's Acknowledgment of County's Commitment to the Safely Surrendered Baby Law

Contractor acknowledges that County places a high priority on the implementation of the Safely Surrendered Baby Law. Contractor understands that it is County's policy to encourage all County contractors to voluntarily post County's "Safely Surrendered Baby Law" poster in a prominent position at Contractor's place of business. Contractor will also encourage its subcontractors, if any, to post this poster in a prominent position in the subcontractor's place of business. County's Department of Children and Family Services will supply Contractor with the poster to be used. Information on how to receive the poster can be found on the Internet at www.babysafela.org.

B. Notice to Employees Regarding the Safely Surrendered Baby Law

Contractor shall notify and provide to its employees, and shall require each subcontractor to notify and provide to its employees, a fact sheet regarding the Safely Surrendered Baby Law, its implementation in County, and where and how to safely surrender a baby. The fact sheet is set forth in Exhibit D of this Contract and is also available on the Internet at www.babysafela.org for printing purposes.

SECTION 9

COMPLIANCE WITH COUNTY'S LIVING WAGE PROGRAM

A. Living Wage Program

This Contract is subject to the provisions of County's ordinance entitled Living Wage Program as codified in Sections 2.201.010 through 2.201.100 of the Los Angeles County Code, a copy of which is attached hereto as Form LW-1 and incorporated by reference into and made a part of this Contract.

B. Payment of Living Wage Rates

1. Unless Contractor has demonstrated to County's satisfaction either that Contractor is not an "Employer" as defined under the Living Wage Program (Section 2.201.020 of County Code) or that Contractor qualifies for an exception to the Living Wage Program (Section 2.201.090 of County Code), Contractor shall pay its Employees no less than the applicable hourly living wage rate, as set forth immediately below, for the Employees' services provided to County, including, without limitation, "Travel Time" as defined below in subsection 5 of this Section 9.B under this Contract:

   a. Not less than $11.84 per hour if, in addition to the per-hour wage, Contractor contributes less than $2.20 per hour towards the provision of bona fide health care benefits for its Employees and any dependents; or

   b. Not less than $9.64 per hour if, in addition to the per-hour wage, Contractor contributes at least $2.20 per hour towards the provision of bona fide health care benefits for its Employees and any dependents. Contractor will be deemed to have contributed $2.20 per hour towards the provision of bona fide health care benefits if the benefits are provided through County Department of Health Services Community Health Plan. If, at any time during this Contract, Contractor contributes less than $2.20 per hour towards the provision of bona fide health care benefits, Contractor shall be required to pay its Employees the higher hourly living wage rate.

2. For purposes of this Section, "Contractor" includes any subcontractor engaged by Contractor to perform services for County under this Contract. If Contractor uses any subcontractor to perform services for County under this Contract, the subcontractor shall be subject to the provisions of this Section. The provisions of this Section shall be inserted into any such subcontract and a copy of the Living Wage Program shall be attached to the subcontract. "Employee" means any individual who is an employee of Contractor under the laws of California, and who is providing full-time services to Contractor, some or all of which are provided to County under this Contract. "Full-time" means a minimum of 40 hours worked per week, or a lesser number of

hours, if the lesser number is a recognized industry standard and is approved as such by County; however, fewer than 35 hours worked per week will not, in any event, be considered full-time.

3. If Contractor is required to pay a living wage when this Contract commences, Contractor shall continue to pay a living wage for the entire term of this Contract, including any option period.

4. If Contractor is not required to pay a living wage when this Contract commences, Contractor shall have a continuing obligation to review the applicability of its "exemption status" from the living wage requirement. Contractor shall immediately notify County if Contractor at any time either comes within the Living Wage Program's definition of "Employer" or if Contractor no longer qualifies for an exception to the Living Wage Program. In either event, Contractor shall immediately be required to commence paying the living wage and shall be obligated to pay the living wage for the remaining term of this Contract, including any option period. County may also require, at any time during this Contract and at its sole discretion, that Contractor demonstrate to County's satisfaction that Contractor either continues to remain outside of the Living Wage Program's definition of "Employer" and/or that Contractor continues to qualify for an exception to the Living Wage Program. Unless Contractor satisfies this requirement within the time frame permitted by County, Contractor shall immediately be required to pay the living wage for the remaining term of this Contract, including any option period.

5. For purposes of Contractor's obligation to pay its Employees the applicable hourly living wage rate under this Contract, "Travel Time" shall have the following two meanings, as applicable: 1) With respect to travel by an Employee that is undertaken in connection with this Contract, Travel Time shall mean any period during which an Employee physically travels to or from a County facility if Contractor pays the Employee any amount for that time or if California law requires Contractor to pay the Employee any amount for that time; and 2) With respect to travel by an Employee between County facilities that are subject to two different contracts between Contractor and County (of which both contracts are subject to the Living Wage Program), Travel Time shall mean any period during which an Employee physically travels to or from, or between such County facilities if Contractor pays the Employee any amount for that time or if California law requires Contractor to pay the Employee any amount for that time.

C. <u>Contractor's Submittal of Certified Monitoring Reports</u>

Contractor shall submit to County certified monitoring reports at a frequency instructed by County. The certified monitoring reports shall list all of Contractor's Employees during the reporting period. The certified monitoring reports shall also verify the number of hours worked, the hourly wage rate paid, and the amount paid

by Contractor for health benefits, if any, for each of its Employees. The certified monitoring reports shall also state the name and identification number of Contractor's current health care benefits plan, and Contractor's portion of the premiums paid as well as the portion paid by each Employee. All certified monitoring reports shall be submitted on forms provided by County, or any other form approved by County which contains the above information. County reserves the right to request any additional information it may deem necessary. If County requests additional information, Contractor shall promptly provide such information. Contractor, through one of its officers, shall certify under penalty of perjury that the information contained in each certified monitoring report is true and accurate.

D. Contractor's Ongoing Obligation to Report Labor Law/Payroll Violations and Claims

During the term of this Contract, if Contractor becomes aware of any labor law/payroll violations or any complaint, investigation, or proceeding ("claim") concerning any alleged labor law/payroll violation (including but not limited to any violation or claim pertaining to wages, hours, and working conditions such as minimum wage, prevailing wage, living wage, the Fair Labor Standards Act, employment of minors, or unlawful employment discrimination), Contractor shall immediately inform County of any pertinent facts known by Contractor regarding the same. This disclosure obligation is not limited to any labor law/payroll violation or claim arising out of Contractor's contract with County, but instead applies to any labor law/payroll violation or claim arising out of any of Contractor's operation in California.

E. County Auditing of Contractor Records

Upon a minimum of 24 hours' written notice, County may audit, at Contractor's place of business, any of Contractor's records pertaining to this Contract, including all documents and information relating to the certified monitoring reports. Contractor is required to maintain all such records in California until the expiration of five years from the date of final payment under this Contract. Authorized agents of County shall have access to all such records during normal business hours for the entire period that records are to be maintained.

F. Notifications to Employees

Contractor shall place County-provided living wage posters at each of Contractor's place of business and locations where Contractor's Employees are working. Contractor shall also distribute County-provided notices to each of its Employees at least once per year. Contractor shall translate posters and handouts into Spanish and any other language spoken by a significant number of Employees.

G. Enforcement and Remedies

If Contractor fails to comply with the requirements of this Section, County shall have the rights and remedies described in this Section in addition to any rights and remedies provided by law or equity.

1. Remedies For Submission of Late or Incomplete Certified Monitoring Reports: If Contractor submits a certified monitoring report to County after the date it is due or if the report submitted does not contain all of the required information or is inaccurate or is not properly certified, any such deficiency shall constitute a breach of this Contract. In the event of any such breach, County may, in its sole discretion, exercise any or all of the following rights/remedies:

   a. Withholding of Payment: If Contractor fails to submit accurate, complete, timely, and properly certified monitoring reports, County may withhold from payment to Contractor up to the full amount of any invoice that would otherwise be due, until Contractor has satisfied the concerns of County, which may include required submittal of revised certified monitoring reports or additional supporting documentation.

   b. Liquidated Damages: It is mutually understood and agreed that Contractor's failure to submit an accurate, complete, timely, and properly certified monitoring report will result in damages being sustained by County. It is also understood and agreed that the nature and amount of the damages will be extremely difficult and impractical to fix; that the liquidated damages set forth herein are the nearest and most exact measure of damages for such breach that can be fixed at this time; and that the liquidated damages are not intended as a penalty or forfeiture for Contractor's breach. Therefore, in the event that a certified monitoring report is deficient, including, but not limited to, being late, inaccurate, incomplete, or uncertified, it is agreed that County may, in its sole discretion, assess against Contractor liquidated damages in the amount of $100 per monitoring report for each day until County has been provided with a properly prepared, complete, and certified monitoring report. County may deduct any assessed liquidated damages from any payments otherwise due to Contractor.

   c. Termination: Contractor's failure to submit an accurate, complete, timely, and properly certified monitoring report may constitute a material breach of this Contract. In the event of such material breach, County may, in its sole discretion, terminate this Contract.

2. Remedies for Payment of Less Than the Required Living Wage: If Contractor fails to pay any Employee at least the applicable hourly living wage rate, such deficiency shall constitute a breach of this Contract. In the

event of any such breach, County may, in its sole discretion, exercise any or all of the following rights/remedies:

a. Withholding Payment: If Contractor fails to pay one or more of its Employees at least the applicable hourly living wage rate, County may withhold from any payment otherwise due to Contractor the aggregate difference between the living wage amounts Contractor was required to pay its Employees for a given pay period and the amount actually paid to the Employees for that pay period. County may withhold said amount until Contractor has satisfied County that any underpayment has been cured, which may include required submittal of revised certified monitoring reports or additional supporting documentation.

b. Liquidated Damages: It is mutually understood and agreed that Contractor's failure to pay any of its Employees at least the applicable hourly living wage rate will result in damages being sustained by County. It is also understood and agreed that the nature and amount of the damages will be extremely difficult and impractical to fix; that the liquidated damages set forth herein are the nearest and most exact measure of damages for such breach that can be fixed at this time; and that the liquidated damages are not intended as a penalty or forfeiture for Contractor's breach. Therefore, it is agreed that County may, in its sole discretion, assess against Contractor liquidated damages of $50 per Employee per day for each and every instance of an underpayment to an Employee. County may deduct any assessed liquidated damages from any payments otherwise due to Contractor.

c. Termination: Contractor's failure to pay any of its Employees the applicable hourly living wage rate may constitute a material breach of this Contract. In the event of such material breach, County may, in its sole discretion, terminate this Contract.

3. Debarment: In the event Contractor breaches a requirement of this Section, County may, in its sole discretion, bar Contractor from the award of future County contracts for a period of time consistent with the seriousness of the breach, in accordance with Los Angeles County Code Section 2.202, Determinations of Contractor Nonresponsibility and Contractor Debarment.

H. Use of Full-Time Employees

Contractor shall assign and use full-time Employees of Contractor to provide services under this Contract unless Contractor can demonstrate to the satisfaction of County that it is necessary to use non-full-time Employees based on staffing efficiency or County requirements for the work to be performed under this Contract. It is understood and agreed that Contractor shall not, under any circumstance, use

non-full-time Employees for services provided under this Contract unless and until County has provided written authorization for the use of same. Contractor submitted with its proposal a full-time-Employee staffing plan. If Contractor changes its full-time-employee staffing plan, Contractor shall immediately provide a copy of the new staffing plan to County.

I. Contractor Retaliation Prohibited

Contractor and/or its Employees shall not take any adverse action which would result in the loss of any benefit of employment, any contract benefit, or any statutory benefit for any Employee, person, or entity who has reported a violation of the Living Wage Program to County or to any other public or private agency, entity, or person. A violation of the provisions of this paragraph may constitute a material breach of this Contract. In the event of such material breach, County may, in its sole discretion, terminate this Contract.

J. Contractor Standards

During the term of this Contract, Contractor shall maintain business stability, integrity in employee relations, and the financial ability to pay a living wage to its employees. If requested to do so by County, Contractor shall demonstrate to the satisfaction of County that Contractor is complying with this requirement.

K. Neutrality in Labor Relations

Contractor shall not use any consideration received under this Contract to hinder, or to further, organization of, or collective bargaining activities by or on behalf of Contractor's employees, except that this restriction shall not apply to any expenditure made in the course of good faith collective bargaining, or to any expenditure pursuant to obligations incurred under a bona fide collective bargaining agreement, or which would otherwise be permitted under the provisions of the National Labor Relations Act.

SECTION 10

TRANSITIONAL JOB OPPORTUNITIES PREFERENCE PROGRAM

This Contract is subject to the provisions of the County's ordinance entitled Transitional Job Opportunities Preference Program, as codified in Chapter 2.205 of the Los Angeles County Code.

Contractor shall not knowingly and with the intent to defraud, fraudulently obtain, retain, attempt to obtain or retain, or aid another in fraudulently obtaining or retaining or attempting to obtain or retain certification as a Transitional Job Opportunity vendor.

Contractor shall not willfully and knowingly make a false statement with the intent to defraud, whether by affidavit, report, or other representation, to a County official or employee for the purpose of influencing the certification or denial of certification of any entity as a Transitional Job Opportunities vendor.

If Contractor has obtained County certification as a Transitional Job Opportunities vendor by reason of having furnished incorrect supporting information or by reason of having withheld information, and which knew, or should have known, the information furnished was incorrect or the information withheld was relevant to its request for certification, and which by reason of such certification has been awarded this Contract to which it would not otherwise have been entitled, shall:

1. Pay to the County any difference between the contract amount and what the County's costs would have been if the contract had been properly awarded;

2. In addition to the amount described in subdivision (1), be assessed a penalty in the amount of not more than ten percent of the amount of this Contract; and

3. Be subject to the provisions of Chapter 2.202 of the Los Angeles County Code (Determinations of Contractor Nonresponsibility and Contractor Debarment).

The above penalties shall also apply to any entity that has previously obtained proper certification, however, as a result of a change in their status would no longer be eligible for certification, and fails to notify Public Works of this information prior to responding to a solicitation or accepting a contract award.

SECTION 11

LOCAL SMALL BUSINESS ENTERPRISE (SBE) PREFERENCE PROGRAM

A. This Contract is subject to the provisions of County's ordinance entitled Local Small Business Enterprise Preference Program, as codified in Chapter 2.204 of the Los Angeles County Code.

B. Contractor shall not knowingly and with the intent to defraud, fraudulently obtain, retain, attempt to obtain or retain, or aid another in fraudulently obtaining or retaining or attempting to obtain or retain certification as a Local Small Business Enterprise.

C. Contractor shall not willfully and knowingly make a false statement with the intent to defraud, whether by affidavit, report, or other representation, to a County official or employee for the purpose of influencing the certification or denial of certification of any entity as a Local Small Business Enterprise.

D. If Contractor has obtained County certification as a Local Small Business Enterprise by reason of having furnished incorrect supporting information or by reason of having withheld information, and which knew, or should have known, the information furnished was incorrect or the information withheld was relevant to its request for certification, and which by reason of such certification has been awarded this Contract to which it would not otherwise have been entitled, shall:

   1. Pay to County any difference between this Contract amount and what County's costs would have been if this Contract had been properly awarded;

   2. In addition to the amount described in subdivision (1), be assessed a penalty in an amount of not more than 10 percent of the amount of this Contract; and

   3. Be subject to the provisions of Chapter 2.202 of the Los Angeles County Code (Determinations of Contractor Nonresponsibility and Contractor Debarment).

E. The above penalties shall also apply if Contractor is no longer eligible for certification as a result of a change of its status and Contractor failed to notify the State and County's Office of Affirmative Action Compliance of this information.

P:\aspub\CONTRACT\BEN\TRANSITSTOP NORTH & SOUTH\2008 - JULY 2007\10 EXHIBIT B-PROPA-GEN REQ-06-22-2007.DOCDOC

EXHIBIT C

Department of the Treasury
Internal Revenue Service

Notice 1015

(Rev. December 2006)

Have You Told Your Employees About the Earned Income Credit (EIC)?

What Is the EIC?

The EIC is a refundable tax credit for certain workers.

Which Employees Must I Notify About the EIC?

You must notify each employee who worked for you at any time during the year and from whom you did not withhold income tax. However, you do not have to notify any employee who claimed exemption from withholding on Form W-4, Employee's Withholding Allowance Certificate.

Note. You are encouraged to notify each employee whose wages for 2006 are less than $38,348 that he or she may be eligible for the EIC.

How and When Must I Notify My Employees?

You must give the employee one of the following:

- The IRS Form W-2, Wage and Tax Statement, which has the required information about the EIC on the back of Copy B.
- A substitute Form W-2 with the same EIC information on the back of the employee's copy that is on Copy B of the IRS Form W-2.
- Notice 797, Possible Federal Tax Refund Due to the Earned Income Credit (EIC).
- Your written statement with the same wording as Notice 797.

If you are required to give Form W-2 and do so on time, no further notice is necessary if the Form W-2 has the required information about the EIC on the back of the employee's copy. If a substitute Form W-2 is given on time but does not have the required information, you must notify the employee within 1 week of the date the substitute Form W-2 is given. If Form W-2 is required but is not given on time, you must give the employee Notice 797 or your written statement by the date Form W-2 is required to be given. If Form W-2 is not required, you must notify the employee by February 7, 2007.

You must hand the notice directly to the employee or send it by First-Class Mail to the employee's last known address. You will not meet the notification requirements by posting Notice 797 on an employee bulletin board or sending it through office mail. However, you may want to post the notice to help inform all employees of the EIC. You can get copies of the notice from the IRS website at *www.irs.gov* or by calling 1-800-829-3676.

How Will My Employees Know If They Can Claim the EIC?

The basic requirements are covered in Notice 797. For more detailed information, the employee needs to see the 2006 instructions for Form 1040, 1040A, 1040EZ, or Pub. 596, Earned Income Credit (EIC).

How Do My Employees Claim the EIC?

Eligible employees claim the EIC on their 2006 tax return. Even employees who have no tax withheld from their pay or owe no tax can claim the EIC and get a refund, but they must file a tax return to do so. For example, if an employee has no tax withheld in 2006 and owes no tax but is eligible for a credit of $824, he or she must file a 2006 tax return to get the $824 refund.

How Do My Employees Get Advance EIC Payments?

Eligible employees who expect to have a qualifying child for 2007 can get part of the credit with their pay during the year by giving you a completed Form W-5, Earned Income Credit Advance Payment Certificate. You must include advance EIC payments with wages paid to these employees, but the payments are not wages and are not subject to payroll taxes. Generally, the payments are made from withheld income, social security, and Medicare taxes. For details, see Pub. 15 (Circular E), Employer's Tax Guide.

Notice **1015** (Rev. 12-2006)
Cat. No. 20599I

Printed on recycled paper

EXHIBIT D.1

No shame.
No blame.
No names.

Newborns can be safely given up at any Los Angeles County hospital emergency room or fire station.

In Los Angeles County:
1-877-BABY SAFE
1-877-222-9723
www.babysafela.org

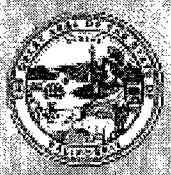

State of California
Gray Davis, Governor

Health and Human Services Agency
Grantland Johnson, Secretary

Department of Social Services
Rita Saenz, Director

Los Angeles County Board of Supervisors
Gloria Molina, Supervisor, First District
Yvonne Brathwaite Burke, Supervisor, Second District
Zev Yaroslavsky, Supervisor, Third District
Don Knabe, Supervisor, Fourth District
Michael D. Antonovich, Supervisor, Fifth District

This initiative is also supported by First 5 LA and INFO LINE of Los Angeles.

What is the Safely Surrendered Baby Law?

California's Safely Surrendered Baby Law allows parents to give up their baby confidentially. As long as the baby has not been abused or neglected, parents may give up their newborn without fear of arrest or prosecution.

How does it work?

A distressed parent who is unable or unwilling to care for a baby can legally, confidentially and safely give up a baby within three days of birth. The baby must be handed to an employee at a Los Angeles County emergency room or fire station. As long as the child shows no signs of abuse or neglect, no name or other information is required. In case the parent changes his or her mind at a later date and wants the baby back, workers will use bracelets to help connect them to each other. One bracelet will be placed on the baby, and a matching bracelet will be given to the parent.

What if a parent wants the baby back?

Parents who change their minds can begin the process of reclaiming their newborns within 14 days. These parents should call the Los Angeles County Department of Children and Family Services at 1-800-540-4000.

Can only a parent bring in the baby?

In most cases, a parent will bring in the baby. The law allows other people to bring in the baby if they have legal custody.

Does the parent have to call before bringing in the baby?

No. A parent can bring in a baby anytime, 24 hours a day, 7 days a week so long as the parent gives the baby to someone who works at the hospital or fire station.

Does a parent have to tell anything to the people taking the baby?

No. However, hospital personnel will ask the parent to fill out a questionnaire designed to gather important medical history information, which is very useful in caring for the child. Although encouraged, filling out the questionnaire is not required.

What happens to the baby?

The baby will be examined and given medical treatment, if needed. Then the baby will be placed in a pre-adoptive home.

What happens to the parent?

Once the parent(s) has safely turned over the baby, they are free to go.

Why is California doing this?

The purpose of the Safely Surrendered Baby Law is to protect babies from being abandoned by their parents and potentially being hurt or killed. You may have heard tragic stories of babies left in dumpsters or public bathrooms. The parents who committed these acts may have been under severe emotional distress. The mothers may have hidden their pregnancies, fearful of what would happen if their families found out. Because they were afraid and had nowhere to turn for help, they abandoned their infants. Abandoning a baby puts the child in extreme danger. It is also illegal. Too often, it results in the baby's death. Because of the Safely Surrendered Baby Law, this tragedy doesn't ever have to happen in California again.

A baby's story

At 8:30 a.m. on Thursday, July 25, 2002, a healthy newborn baby was brought to St. Bernardine Medical Center in San Bernardino under the provisions of the California Safely Surrendered Baby Law. As the law states, the baby's mother did not have to identify herself. When the baby was brought to the emergency room, he was examined by a pediatrician, who determined that the baby was healthy and doing fine. He was placed with a loving family while the adoption process was started.

Every baby deserves a chance for a healthy life. If someone you know is considering abandoning a newborn, let her know there are other options.

It is best that women seek help to receive proper medical care and counseling while they are pregnant. But at the same time, we want to assure parents who choose not to keep their baby that they will not go to jail if they deliver their babies to safe hands in any Los Angeles County hospital ER or fire station.

Sin pena.
Sin culpa.
Sin peligro.

Los recién nacidos pueden ser entregados en forma segura en la sala de emergencia de cualquier hospital o en un cuartel de bomberos del Condado de Los Angeles.

En el Condado de Los Angeles:
1-877-BABY SAFE
1-877-222-9723
www.babysafela.org

Estado de California
Gray Davis, Gobernador

Agencia de Salud y Servicios Humanos
(Health and Human Services Agency)
Grantland Johnson, Secretario

Departamento de Servicios Sociales
(Department of Social Services)
Rita Saenz, Directora

Consejo de Supervisores del Condado de Los Angeles
Gloria Molina, Supervisora, Primer Distrito
Yvonne Brathwaite Burke, Supervisora, Segundo Distrito
Zev Yaroslavsky, Supervisor, Tercer Distrito
Don Knabe, Supervisor, Cuarto Distrito
Michael D. Antonovich, Supervisor, Quinto Distrito

Esta Iniciativa tambien esta apollada por First 5 LA y INFO LINE de Los Angeles.

¿Qué es la Ley de Entrega de Bebés Sin Peligro?

La Ley de Entrega de Bebés Sin Peligro de California permite a los padres entregar a su recién nacido confidencialmente. Siempre que el bebé no haya sufrido abuso ni negligencia, padres pueden entregar a su recién nacido sin temor a ser arrestados o procesados.

¿Cómo funciona?

El padre/madre con dificultades que no pueda o no quiera cuidar de su recién nacido puede entregarlo en forma legal, confidencial y segura, dentro de los tres días del nacimiento. El bebé debe ser entregado a un empleado de una sala de emergencias o de un cuartel de bomberos del Condado de Los Angeles. Siempre que el bebé no presente signos de abuso o negligencia, no será necesario suministrar nombres ni información alguna. Si el padre/madre cambia de opinión posteriormente y desea recuperar a su bebé, los trabajadores utilizarán brazaletes para poder vincularlos. El bebé llevará un brazalete y el padre/madre recibirá un brazalete igual.

¿Qué pasa si el padre/madre desea recuperar a su bebé?

Los padres que cambien de opinión pueden empezar el proceso de reclamar a su recién nacido dentro de los 14 días. Estos padres deberán llamar al Departamento de Servicios para Niños y Familias (Department of Children and Family Services) del Condado de Los Angeles, al 1-800-540-4000.

¿Sólo los padres podrán llevar al recién nacido?

En la mayoría de los casos, los padres son los que llevan al bebé. La ley permite que otras personas lleven al bebé si tienen la custodia legal del menor.

¿Los padres deben llamar antes de llevar al bebé?

No. El padre/madre puede llevar a su bebé en cualquier momento, las 24 horas del día, los 7 días de la semana, mientras que entregue a su bebé a un empleado del hospital o de un cuartel de bomberos.

¿Es necesario que el padre/madre diga algo a las personas que reciben al bebé?

No. Sin embargo, el personal del hospital le pedirá que llene un cuestionario con la finalidad de recabar antecedentes médicos importantes, que resultan de gran utilidad para los cuidados que recibirá el bebé. Es recomendado llenar este cuestionario, pero no es obligatorio hacerlo.

¿Qué ocurrirá con el bebé?

El bebé será examinado y, de ser necesario, recibirá tratamiento médico. Luego el bebé se entregará a un hogar preadoptivo.

¿Qué pasará con el padre/madre?

Una vez que los padres hayan entregado a su bebé en forma segura, serán libres de irse.

¿Por qué California hace esto?

La finalidad de la Ley de Entrega de Bebés Sin Peligro es proteger a los bebés del abandono por parte de sus padres y de la posibilidad de que mueran o sufran daños. Usted probablemente haya escuchado historias trágicas sobre bebés abandonados en basureros o en baños públicos. Es posible que los padres que cometieron estos actos hayan estado atravesando dificultades emocionales graves. Las madres pueden haber ocultado su embarazo, por temor a lo que pasaría si sus familias se enteraran. Abandonaron a sus recién nacidos porque tenían miedo y no tenían adonde recurrir para obtener ayuda. El abandono de un recién nacido lo pone en una situación de peligro extremo. Además es ilegal. Muy a menudo el abandono provoca la muerte del bebé. Ahora, gracias a la Ley de Entrega de Bebés Sin Peligro, esta tragedia ya no debe suceder nunca más en California.

Historia de un bebé

A las 8:30 a.m. del jueves 25 de julio de 2002, se entregó un bebé recién nacido saludable en el St. Bernardine Medical Center en San Bernardino, en virtud de las disposiciones de la Ley de Entrega de Bebés Sin Peligro. Como lo establece la ley, la madre del bebé no se tuvo que identificar. Cuando el bebé llegó a la sala de emergencias, un pediatra lo revisó y determinó que el bebé estaba saludable y no tenía problemas. El bebé fue ubicado con una buena familia, mientras se iniciaban los trámites de adopción.

Cada recién nacido merece una oportunidad de tener una vida saludable. Si alguien que usted conoce está pensando en abandonar a un recién nacido, infórmele qué otras opciones tiene.

Es mejor que las mujeres busquen ayuda para recibir atención médica y asesoramiento adecuado durante el embarazo. Pero al mismo tiempo, queremos asegurarles a los padres que optan por no quedarse con su bebé que no irán a la cárcel si dejan a sus bebés en buenas manos en cualquier sala de emergencia de un hospital o en un cuartel de bomberos del Condado de Los Angeles.

EXHIBIT E

BUS STOP SHELTER LOCATIONS FOR MAINTENANCE PROGRAM – NORTHERN UNINCORPORATED AREAS OF LOS ANGELES COUNTY

EXHIBIT E.1
BUS STOP SHELTER LOCATIONS FOR MAINTENANCE PROGRAM AT NORTHERN UNINCORPORATED AREAS OF LOS ANGELES COUNTY

Auto #	Community	Dir.	Street	Corner	Cross Street	T.G.	Sup. Dist	PSA Panels	Watershed	Shelter Type	Lighting
1	Antelope Valley	SB	110th St E	FS	Ave R-10	4288-E2	5	0	Antelope Valley	N. Co. shltr	Solar Panels
2	Antelope Valley	SB	110th St E	FS	Ave R-14	4288-E3	5	0	Antelope Valley	N. Co. shltr	Solar Panels
3	Antelope Valley	SB	110th St E	FS	Ave R-8	4288-E2	5	0	Antelope Valley	N. Co. shltr	Solar Panels
4	Antelope Valley	SB	160th St E	FS	Ave Q	4199-F6	5	0	Antelope Valley	N. Co. shltr	Solar Panels
5	Antelope Valley	NB	160th St E	FS	Ave Q	4199-F6	5	0	Antelope Valley	N. Co. shltr	Solar Panels
6	Antelope Valley	NB	170th St E	NS	Ave P	4199-H4	5	0	Antelope Valley	N. Co. shltr	Solar Panels
7	Antelope Valley	NB	170th St E	MB	Park Valley Ave/Ave O	4199-H2	5	0	Antelope Valley	N. Co. shltr	Solar Panels
8	Antelope Valley	SB	50th St W	FS	Ave L	4104-H4	5	0	Antelope Valley	N. Co. shltr	Solar Panels
9	Antelope Valley	NB	50th St W	NS	Ave L	4104-H4	5	0	Antelope Valley	N. Co. shltr	Solar Panels
10	Antelope Valley	SB	50th St W	FS	Ave L-12	4104-H5	5	0	Antelope Valley	N. Co. shltr	Solar Panels
11	Antelope Valley	NB	50th St W	NS	Ave L-8	4104-H5	5	0	Antelope Valley	N. Co. shltr	Solar Panels
12	Antelope Valley	SB	50th St W	FS	Ave L-4	4104-H4	5	0	Antelope Valley	N. Co. shltr	Solar Panels
13	Antelope Valley	SB	50th St W	FS	Ave M-8	4104-H7	5	0	Antelope Valley	Marv. shltr	Solar Panel
14	Antelope Valley	NB	50th St W	FS	Ave L-12	4104-H5	5	2	Antelope Valley	Marv. shltr	Solar Panel
15	Antelope Valley	SB	50th St W	NS	Columbia Wy (Ave M)	4104-H5	5	2	Antelope Valley	N. Co. shltr	Solar Panels
16	Antelope Valley	SB	50th St W	FS	Columbia Wy (Ave M)	4104-H6	5	2	Antelope Valley	Marv. shltr	Solar Panel
17	Antelope Valley	SB	50th St W	NS	Columbia Wy (Ave M)	4104-H6	5	0	Antelope Valley	N. Co. shltr	Solar Panels
18	Antelope Valley	SB	65th St W	NS	Columbia Wy (Ave M)	4104-E6	5	0	Antelope Valley	N. Co. shltr	Solar Panels
19	Antelope Valley	NB	90th St E	NS	Palmdale Bl	4197-J7	5	0	Antelope Valley	N. Co. shltr	Solar Panels
20	Antelope Valley	SB	96th St E	FS	Ave S	4288-B3	5	0	Antelope Valley	N. Co. shltr	Solar Panels
21	Antelope Valley	SB	96th St E	NS	Ave S-12	4288-B5	5	0	Antelope Valley	N. Co. shltr	Solar Panels
22	Antelope Valley	SB	96th St E	FS	Ave S-8	4288-B4	5	0	Antelope Valley	N. Co. shltr	Solar Panels
23	Antelope Valley	SB	96th St E	FS	Ave T	4288-B5	5	0	Antelope Valley	N. Co. shltr	Solar Panels
24	Antelope Valley	SB	96th St E	FS	Ave T-8	4288-B6	5	0	Antelope Valley	N. Co. shltr	Solar Panels
25	Antelope Valley	SB	170th St E	MB	Ave M-4 & M-8	4109-G6	5	0	Antelope Valley	N. Co. shltr	Solar Panels
26	Antelope Valley	SB	170th St E	FS	Ave M-8 (300' S)	4109-H6	5	0	Antelope Valley	N. Co. shltr	Solar Panels
27	Antelope Valley	EB	Ave M	NS	52nd St W	4104-G6	5	0	Antelope Valley	N. Co. shltr	Solar Panels
28	Antelope Valley	EB	Ave M	FS	55th St W	4104-G6	5	0	Antelope Valley	N. Co. shltr	Solar Panels
29	Antelope Valley	EB	Ave M	FS	60th St W	4104-F6	5	0	Antelope Valley	N. Co. shltr	Solar Panels
30	Antelope Valley	EB	Ave M	MB	Ave 60 St W (1000 ft. E)	4104-F6	5	0	Antelope Valley	N. Co. shltr	Solar Panels
31	Lake Los Angeles	WB	Ave O	FS	170th St East	4199 H2	5	2	Antelope Valley	Clr Chnl	Solar Pole
32	Antelope Valley	WB	Ave P-8	FS	163rd St E	4199-F5	5	0	Antelope Valley	N. Co. shltr	Solar Panels
33	Antelope Valley	EB	Ave P-8	FS	163rd St E	4199-F5	5	0	Antelope Valley	N. Co. shltr	Solar Panels

Each shelter includes a bench, a trash receptacle, and solar-powered or electrical hard-wire lighting.
NS=Nearside, FS=Farside, MB=Midblock

EXHIBIT E.1
BUS STOP SHELTER LOCATIONS FOR MAINTENANCE PROGRAM AT NORTHERN UNINCORPORATED AREAS OF LOS ANGELES COUNTY

Auto #	Community	Dir.	Street	Corner	Cross Street	T.G.	Sup. Dist	PSA Panels	Watershed	Shelter Type	Lighting
34	Antelope Valley	WB	Ave P-8	NS	Frontier Circus St.	4199-G5	5	0	Antelope Valley	N. Co. shltr	Solar Panels
35	Antelope Valley	WB	Ave R	FS	105th St E	4288-D1	5	0	Antelope Valley	N. Co. shltr	Solar Panels
36	Antelope Valley	WB	Ave S	FS	102nd St E	4288-C3	5	0	Antelope Valley	N. Co. shltr	Solar Panels
37	Antelope Valley	WB	Ave S	NS	105th St E	4288-D3	5	0	Antelope Valley	N. Co. shltr	Solar Panels
38	Antelope Valley	WB	Ave S	FS	107th St E	4288-D3	5	0	Antelope Valley	N. Co. shltr	Solar Panels
39	Antelope Valley	WB	Ave R	NS	100th St E	4288-B1	5	0	Antelope Valley	N. Co. shltr	Solar Panels
40	Antelope Valley	WB	Ave R	FS	110th St E	4288-E1	5	0	Antelope Valley	N. Co. shltr	Solar Panels
41	Antelope Valley	WB	Ave S	FS	100th St E	4288-C3	5	0	Antelope Valley	N. Co. shltr	Solar Panels
42	Bouquet Canyon	NB	Bouquet Canyon Rd	inside	29980 Bouquet Cyn	4461-G2	5	0	Santa Clara River	N. Co. shltr	Solar Panel
43	Santa Clarita	SB	Bouquet Canyon Rd	NS	Mobile Home Park	4461-F3	5	0	Santa Clara River	N. Co. shltr	Solar Panels
44	Santa Clarita	SB	Del Valle Rd	FS	Hasley Cyn Rd	4459-E5	5	0	Santa Clara River	N. Co. shltr	Solar Panels
45	Santa Clarita	NB	Del Valle Rd	MB	Silver St (#1)	4459-D6	5	0	Santa Clara River	N. Co. shltr	Solar Panels
46	Santa Clarita	NB	Del Valle Rd	MB	Silver St (#2)	4459-D6	5	0	Santa Clara River	N. Co. shltr	Solar Panels
47	Santa Clarita	WB	Hemingway Ave	MB	Anderson Ln	4550-C7	5	0	Santa Clara River	N. Co. shltr	Solar Panels
48	Santa Clarita	NB	Hemingway Ave	FS	London Pl	4550-C7	5	0	Santa Clara River	N. Co. shltr	Solar Panels
49	Santa Clarita	NB	Hemingway Ave	MB	Stevenson Ranch Pkwy	4550-C7	5	0	Santa Clara River	N. Co. shltr	Solar Panels
50	Santa Clarita	WB	Lake Hughes Rd	NS	Castaic Rd	4369-G6	5	0	Santa Clara River	N. Co. shltr	Solar Panels
51	Santa Clarita	WB	Lake Hughes Rd	FS	Diamond Ln	4369-H6	5	0	Santa Clara River	N. Co. shltr	Solar Panels
52	Santa Clarita	WB	Lake Hughes Rd	FS	Ridge Route Rd	4369-H6	5	0	Santa Clara River	N. Co. shltr	Solar Panels
53	Santa Clarita	SB	Mcbean Pkwy	NS	Skycrest Cr	4460-F6	5	0	Santa Clara River	N. Co. shltr	Solar Panels
54	Santa Clarita	SB	Mcbean Pkwy	FS	Sunset Hills Dr	4460-G5	5	0	Santa Clara River	N. Co. shltr	Solar Panels
55	Antelope Valley	WB	Palmdale Blvd	FS	158th St E	4199-E7	5	0	Antelope Valley	N. Co. shltr	Solar Panels
56	Santa Clarita	EB	Parker Rd	FS	The Old Rd	4369-G7	5	0	Santa Clara River	N. Co. shltr	Solar Panels
57	Santa Clarita	EB	Parker Rd	NS	Tobiah Pl	4369-G7	5	0	Santa Clara River	N. Co. shltr	Solar Panels
58	Antelope Valley	EB	Pearlbossom Hwy	FS	77th St E	4377-G1	5	0	Antelope Valley	N. Co. shltr	Solar Panels
59	Santa Clarita	EB	Plum Canyon Rd	FS	Golden Valley Rd	4461-E6	5	0	Santa Clara River	N. Co. shltr	Solar Panels
60	Santa Clarita	WB	Plum Canyon Rd	FS	Santa Catarina	4461-E6	5	0	Santa Clara River	N. Co. shltr	Solar Panels
61	Santa Clarita	WB	Plum Canyon Rd	FS	Via Joyce	4461-E6	5	0	Santa Clara River	N. Co. shltr	Solar Panels
62	Santa Clarita	EB	Poe Pkwy	FS	Franklin Ln	4640-B1	5	0	Santa Clara River	N. Co. shltr	Solar Panels
63	Val Verde	EB	San Martinez Rd	FS	Parker St. (#1)	4459 C6	5	2	Santa Clara River	Clr Chnl	Hard-wire
64	Val Verde	EB	San Martinez Rd	FS	Parker St. (#2)	4459 C6	5	2	Santa Clara River	Clr Chnl	Hard-wire
65	Santa Clarita	NB	Sierra Hwy	FS	Canyon Park Rd	4551-H4	5	0	Santa Clara River	N. Co. shltr	Solar Panels
66	Santa Clarita	SB	Sierra Hwy	NS	Fitch St	4462-C6	5	0	Santa Clara River	N. Co. shltr	Solar Panels

Each shelter includes a bench, a trash receptacle, and solar-powered or electrical hard-wire lighting.
NS=Nearside, FS=Farside, MB=Midblock

EXHIBIT E.1
BUS STOP SHELTER LOCATIONS FOR MAINTENANCE PROGRAM AT NORTHERN UNINCORPORATED AREAS OF LOS ANGELES COUNTY

Auto #	Community	Dir.	Street	Corner	Cross Street	T.G.	Sup. Dist	PSA Panels	Watershed	Shelter Type	Lighting
67	Santa Clarita	WB	Sloan Canyon Rd	FS	Nares Dr	4369-G7	5	0	Santa Clara River	N. Co. shltr	Solar Panels
68	Santa Clarita	WB	Sloan Canyon Rd	FS	The Old Rd	4369-G6	5	0	Santa Clara River	N. Co. shltr	Solar Panels
69	Santa Clarita	SB	The Old Rd	NS	25720 The Old Rd	4550-D7	5	0	Santa Clara River	N. Co. shltr	Solar Panels
70	Santa Clarita	SB	The Old Rd	MB	Constitution Ave	4640-D1	5	0	Santa Clara River	N. Co. shltr	Solar Panels
71	Santa Clarita	SB	The Old Rd	FS	Hillcrest Pkwy	4459-H3	5	0	Santa Clara River	N. Co. shltr	Solar Panels
72	Santa Clarita	SB	The Old Rd	FS	Opp. 25660 Old Rd	4640-D1	5	0	Santa Clara River	N. Co. shltr	Solar Panels
73	Santa Clarita	SB	The Old Rd	NS	Opp. 25850 Old Rd	4640-D1	5	0	Santa Clara River	N. Co. shltr	Solar Panels
74	Santa Clarita	SB	The Old Rd	FS	Pico Canyon Rd	4640-D1	5	0	Santa Clara River	N. Co. shltr	Solar Panels
75	Santa Clarita	SB	The Old Rd	FS	Sagecrest Cr	4640-E1	5	0	Santa Clara River	N. Co. shltr	Solar Panels
76	Santa Clarita	SB	The Old Rd	FS	Sedona Wy	4459-H4	5	0	Santa Clara River	N. Co. shltr	Solar Panels

* Shelters are next to one another

P:\aspub\CONTRACT\BEN\TRANSITSTOP NORTH & SOUTH\2008 - JULY 2007\RFP\[17 Exhibit E.1 North Locations.xls]E1.4

Each shelter includes a bench, a trash receptacle, and solar-powered or electrical hard-wire lighting.
NS=Nearside, FS=Farside, MB=Midblock

EXHIBIT E.2
BUS BENCH LOCATIONS FOR MAINTENANCE PROGRAM AT
NORTHERN UNINCORPORATED AREAS OF LOS ANGELES COUNTY

Loc. #	Community	Direction	Street	Corner	Cross Street	Watershed	No. of units	T.G.	Sup. Dist.	Adjacent to Trash Receptacles
1	Santa Clarita	EB	Stevenson Ranch Pkwy	NS	The Old Rd	Santa Clara River	1	4550-D6	5	1
2	Santa Clarita	WB	Stevenson Ranch Pkwy	FS	The Old Rd	Santa Clara River	1	4550-D6	5	1
3	Santa Clarita	NB	The Old Rd	FS	25590 The Old Rd	Santa Clara River	2	4550-D6	5	1
4	Santa Clarita	NB	The Old Rd	FS	25636 The Old Rd	Santa Clara River	2	4550-D6	5	1
5	Santa Clarita	NB	The Old Rd	FS	25820 The Old Rd	Santa Clara River	2	4550-D7	5	1
6	Santa Clarita	NB	The Old Rd	FS	25860 The Old Rd	Santa Clara River	2	4550-D6	5	1
7	Santa Clarita	NB	The Old Rd	FS	Constitution Av	Santa Clara River	1	4550-D7	5	1
8	Santa Clarita	NB	The Old Rd	NS	Pico Canyon Rd	Santa Clara River	1	4640-D1	5	1
9	Santa Clarita	NB	The Old Rd	MB	Pico Canyon Rd	Santa Clara River	1	4640-D1	5	1
10	Santa Clarita	NB	The Old Rd	NS	Sagecrest Cr	Santa Clara River	1	4640-E1	5	1

P:\aspub\CONTRACT\BEN\TRANSITSTOP NORTH & SOUTH\2008 - JULY 2007\RFP\[17 Exhibit E.1 North Locations.xls]E1.4

NS=Nearside, FS=Farside, MB=Midblock

EXHIBIT E.3
STAND ALONE TRASH RECEPTACLE LOCATIONS FOR MAINTENANCE PROGRAM AT NORTHERN UNINCORPORATED AREAS OF LOS ANGELES COUNTY

Auto #	STREET	CROSS STREET	DIR	NS/FS#	SD	T.G.	Watershed
1	Bouquet Canyon Rd	29527 Bouquet Canyon Rd	SB	FS	5	4461-G2	Santa Clara River
2	Bouquet Canyon Rd	Shadow Valley Ln	NB	NS	5	4461-E4	Santa Clara River
3	Bouquet Canyon Rd	Shadow Valley Ln	SB	NS	5	4461-E4	Santa Clara River
4	Chiquella Ln	The Old Rd	NB	FS	5	4640-E1	Santa Clara River
5	Chiquella Ln	The Old Rd/Pico Canyon Rd	SB	MB	5	4640-E1	Santa Clara River
6	Chiquito Canyon Rd	Hwy 126	NB	FS	5	4549-C3	Santa Clara River
7	Chiquito Canyon Rd	Lincoln Av	NB	NS	5	4459-C7	Santa Clara River
8	Chiquito Canyon Rd	Taft Ct	NB	NS	5	4459-C7	Santa Clara River
9	Commerce Center Dr	Franklin Pkwy	SB	FS	5	4459-G7	Santa Clara River
10	Commerce Center Dr	Franklin Pkwy	NB	FS	5	4459-G7	Santa Clara River
11	Commerce Center Dr	Harrison Pkwy	SB	FS	5	4459-G7	Santa Clara River
12	Commerce Center Dr	Harrison Pkwy	NB	FS	5	4459-G7	Santa Clara River
13	Commerce Center Dr	Highway 126	NB	FS	5	4459-H7	Santa Clara River
14	Commerce Center Dr	Industry Dr	SB	FS	5	4459-G6	Santa Clara River
15	Commerce Center Dr	Witherspoon Pkwy/Industry Dr	NB	MB	5	4459-G6	Santa Clara River
16	Commerce Center Dr	Witherspoon Pkwy	NB	FS	5	4459-G6	Santa Clara River
17	Commerce Center Dr	Witherspoon Pkwy	SB	FS	5	4459-G6	Santa Clara River
18	Del Valle Rd	Hasley Canyon Rd	EB	NS	5	4459-E5	Santa Clara River
19	Faulkner Dr	Burke Pl	EB	NS	5	4550-A7	Santa Clara River
20	Faulkner Dr	Forsythe Wy	EB	FS	5	4550-A7	Santa Clara River
21	Faulkner Dr	Hemingway Av	EB	NS	5	4550-B7	Santa Clara River
22	Faulkner Dr	Hood Wy	EB	FS	5	4550-B7	Santa Clara River
23	Faulkner Dr	Thurber Wy	EB	FS	5	4550-A7	Santa Clara River
24	Greenhill Dr	Pinto Pl	SB	NS	5	4369-F5	Santa Clara River
25	Hasley Canyon Rd	The Old Rd	WB	FS	5	4459-H5	Santa Clara River
26	Hasley Canyon Rd	Cambridge Av	NB	FS	5	4459-G5	Santa Clara River
27	Hasley Canyon Rd	Cambridge Av	WB	FS	5	4459-G5	Santa Clara River
28	Hemingway Av	Wilde Av	WB	FS	5	4550-B7	Santa Clara River
29	Highway 126	Commerce Center Dr	EB	FS	5	4459-H7	Santa Clara River
30	Highway 126	Commerce Center Dr	WB	FS	5	4459-H7	Santa Clara River
31	Kavenagh Ln	Baldwin Pl	WB	FS	5	4550-B6	Santa Clara River
32	Kavenagh Ln	Caroll Ln	WB	FS	5	4550-B6	Santa Clara River
33	Kavenagh Ln	Hemingway Av	WB	FS	5	4550-B7	Santa Clara River
34	Kavenagh Ln	Salinger Ln/Twain Pl	WB	MB	5	4550-B6	Santa Clara River
35	Magic Mountain Pkwy	The Old Rd	WB	FS	5	4550-C2	Santa Clara River
36	Mallory Dr	Peacock Pl	SB	FS	5	4550-A6	Santa Clara River
37	Mallory Dr	Waycott Wy	SB	FS	5	4550-A6	Santa Clara River
38	Poe Pkwy	Stevenson Ranch Pkwy	EB	NS	5	4640-C1	Santa Clara River
39	Poe Pkwy	Whitman St	EB	FS	5	4640-B1	Santa Clara River
40	Ridge Route Rd	Opp. 31657 Ridge Route Rd	NB	MB	5	4369-H6	Santa Clara River
41	Royal Rd	The Old Rd	EB	NS	5	4369-G5	Santa Clara River
42	San Martinez Rd	Chiquito Canyon Rd	EB	NS	5	4459-C6	Santa Clara River
43	San Martinez Rd	Neuraschel St	EB	FS	5	4459-C6	Santa Clara River
44	San Martinez Rd	Neuraschel St	WB	FS	5	4459-C6	Santa Clara River
45	Sierra Hwy	Sand Canyon Rd	SB	FS	5	4462-C5	Santa Clara River
46	Sierra Hwy	Sand Canyon Rd	NB	FS	5	4462-C5	Santa Clara River
47	Stevenson Ranch Pkwy	Chisolm Ln	NB	FS	5	4640-C1	Santa Clara River
48	Stevenson Ranch Pkwy	Holmes Pl	WB	FS	5	4550-D7	Santa Clara River
49	Stevenson Ranch Pkwy	Huston St/Hemingway Av	NB	MB	5	4550-C7	Santa Clara River
50	Stevenson Ranch Pkwy	Steinbeck Av	NB	FS	5	4550-C7	Santa Clara River
51	The Old Rd	Hillcrest Ln	NB	NS	5	4459-H3	Santa Clara River
52	The Old Rd	Parker Rd	SB	FS	5	4369-G7	Santa Clara River
53	Victoria Rd	The Old Rd	WB	FS	5	4369-F5	Santa Clara River

01/16/2008

NS=Nearside, FS=Farside, MB=Midblock

EXHIBIT E.4
STAND-ALONE SOLAR LIGHT POLES FOR MAINTENANCE PROGRAM IN THE NORTHERN UNINCORPORATED AREAS OF LOS ANGELES COUNTY

Locations with solar light pole model i-STOP® F1 by Carmanah Technology

Auto No.	UNINCORP. AREA	POS	STREET1	CRNR	STREET2	PAGE	SD
1	Palmdale	W/O	Ave L	SS	42nd St W	4104-J4	5
2	Palmdale	W/O	Ave L	SS	45th St W	4104-J4	5
3	Palmdale	E/O	Columbia Wy (Ave M)	NS	60th St W	4104-F6	5
4	Palmdale	W/O	Ave O	NS	170th St E	4199-H2	5
5	Palmdale	E/O	Palmdale Blvd	SS	95th St E	4198-B7	5

P:\aspub\CONTRACT\BEN\TRANSITSTOP NORTH & SOUTH\2008 - JULY 2007\RFP\[17 Exhibit E.1 North Locations.xls]E1.4

EXHIBIT F

BUS STOP SHELTER SPECIFICATIONS FOR MAINTENANCE PROGRAM – NORTHERN UNINCORPORATED AREAS OF LOS ANGELES COUNTY

SPECIFICATIONS FOR NORTH COUNTY SOLAR-POWERED BUS STOP SHELTER STRUCTURE (NO PSA PANELS, WITH ELECTRONIC MESSAGE DISPLAY)

Welding:

1) All structural shop welds shall be done by electric shielded arc process. Field welds shall be performed by welders certified or approved by the County of Los Angeles and inspected by the Project/Office Engineer. All steel welding shall conform to the latest edition of American Welding Society Standard D1.1. Electrodes shall conform to the latest edition of American Welding Society Standard A5.1, class E70XX (Low Hydrogen).

2) All steel components must be welded in accordance with American Welding Society (AWS) D1.1. All aluminum welding shall conform to the latest edition of American Welding Society Standard A5.10, class ER-4043.

Structural Materials:

Extruded aluminum members shall be aluminum 6063-T5 or better. Structural steel shall conform to American Society of Testing and Materials (ASTM) A-36, minimum yield strength of 36,000 psi or of equal/better strength which are readily available. Structural tubing shall have rounded edges and conform to ASTM A501 or A-53 Grade B. All structural framing members and mullions shall be
1-piece seamless extruded tubes of aluminum 6061-T6 or 6063-T5 alloy.

Durability:

Shelters shall be designed to withstand minimum dead loads of 40 psf and minimum wind loads of 75 mph or that required by the latest edition of the Los Angeles County Building Code. Shelters must be designed to withstand a variety of conditions including, at a minimum, inclement weather, salt air, high winds, and bright sunlight.

Paint:

Shelter frame color shall be black. Paint must be applied with baked polyurethane or powder coated finish. All exposed steel and iron components shall be shop galvanized and powder coated after welding and assembly.

Structure:

Below is the approximate description and dimensions of the bus shelter (equivalent dimensions will be accepted):

1. Style: Tolar Maravilla Style 13NAHP-PMTR, LNI Aurora Series Model-SL 13, or Department approved equal.

SPECIFICATIONS FOR NORTH COUNTY SOLAR-POWERED BUS STOP SHELTER STRUCTURE (NO PSA PANELS, WITH ELECTRONIC MESSAGE DISPLAY)

2. Shape: Approximate the designs shown on Exhibit G.1.1.

3. Roof material: Shall be chemically treated to prevent the accumulation of dirt and dust. Roof tile shall be fire-resistant, with Class A rating. Roof tile shall have Spanish style roof tile profile.

4. Roof dimensions: approx. 13'-8" x 5'-0". The height of roof shall be approximately 1'- 6" from peak to base of roof perimeter and the length of peak of roof shall be approximately 9'- 8".

5. Roof type: Peak Spanish style tile roof. Roof design shall also include two horizontal conduits, one to be used as a gutter and the other one to house the electric wiring and or to serve as a conduit that supports electronic message display device if applicable.

6. Height of shelter: 8'-4" (approx. height to ceiling)

7. Width of shelter: 5'-0". Edge of shelter overhang shall be a minimum of 2'-6" away from edge of sidewalk. Distance between the front and back columns shall be 3'-0" on center as shown on Exhibit G.1.2.

8. Decorative iron frame: All three sides of these shelters shall have perforated sheet metal frame as shown on Exhibit G.1.1, or other frame designs approved by the Engineer, that blend aesthetically with the surrounding community and will protect patrons from the inclement weather in North Los Angeles County. Perforated sheet metal frame shall be minimum 16 ga. galvanized or aluminum sheets.

9. All fasteners shall be concealed or vandal-resistant.

10. The shelters are to be anchor-bolted to the sidewalk at a minimum of 3" deep into concrete sidewalk with vandal-resistant hardware to prevent accidents, vandalism or theft. All fasteners shall be concealed or vandal-resistant.

Installation of Solar Lighting System (integrated into bus shelter):

1) Solar Panel: Solar panel array shall consist of Mono or Polycrystalline silicon cells. The solar panel shall have a 10-year warranty and sized to meet the load of items 3, 4, 5, 6, 7 and the Electronic Message Display Device as described below.

2) Enclosed Power Unit (EPU): The EPU shall be constructed of .090 aluminum or equivalent. The solar panel shall cover the EPU and shall be fastened to the EPU using vandal resistant hardware. The battery, system controls, and DC inverter ballast shall be housed in the EPU. The EPU shall have a ten-year warranty.

SPECIFICATIONS FOR NORTH COUNTY SOLAR-POWERED BUS STOP SHELTER STRUCTURE (NO PSA PANELS, WITH ELECTRONIC MESSAGE DISPLAY)

3) Solar Lighting Controller: The solar lighting controller shall be protected with a 20A fuse. The fuse shall be a sealed, weather-resistant holder. The controller shall have a five-year warranty.

4) Run Operation for Illumination: Lighting will be on from dusk to dawn.

5) Transformer: The Cold Cathode Fluorescent (CCF) transformer shall be matched to the CCF lamp. The transformer shall have a five-year warranty.

6) Luminaire: The luminaire shall consist of a Light Emitting Diode (LED) lamp unit with SOL Max-Lite reflector or Department approved equal that provides a minimum average of 0.9 foot-candle (fc) from grade level inside the bus stop shelter. Lamp shall have an average life of a minimum of 100,000 lamp hours and shall be maintenance free. The LED lamp shall be embedded in a platform as one unit for convenience. The reflector shall be constructed of polycarbonate to protect against severe impact and vandalism and shall be mounted to the ceiling with vandal-resistant hardware. The reflector shall be warranted for the life of the system.

7) Battery: The battery shall be Gel-Tech Type, 12 V sealed valve regulated gel cell rated for a minimum of 450 amp hours at the 100-hour rate or equivalent. The battery must be maintenance free and uses no water and shall have a five-year prorated warranty.

8) Self-Test: For ease of maintenance of the system shall be capable of activation during the day via a locking switch or other similar device to test if the system is functioning. Activation of the self-test switch must be possible without opening the EPU or luminaire.

9) Powder Coating: All exterior aluminum components shall be powder coated.

10) Original Manufacturers Specification Sheets: Specification sheets must be provided for all components and the contractor must provide information showing products conform to specifications.

11) Drawings: Working drawings showing all systems listed above and their attachment must be provided. Contractor must also submit calculations showing the solar energy will adequately provide the electricity required in the specifications.

12) Solar panels: A platform designed to hold the solar collector is an integral part of the roof design. The platform is designed to be placed flat on top of roof. The solar panel attachment to the wall of the roof must be vandal proof and be powder coated the same color as the roof fascia. Roof style for said shelter is High Peak Roof.

SPECIFICATIONS FOR NORTH COUNTY SOLAR-POWERED BUS STOP SHELTER STRUCTURE (NO PSA PANELS, WITH ELECTRONIC MESSAGE DISPLAY)

Electronic Message Display Device

Physical

1) Style: NextBus Rugged Transit Display (RTD), or equivalent.
2) Shape: 5" Height x 18" Width x 4" Depth (Approx.)
3) Design: Approximate the designs shown on Exhibit G.10.
4) Finish: Powder Coat finish
5) The display device shall be constructed to protect against severe impact and vandalism and shall be mounted to the luminaire with vandal-resistant hardware.
6) Warranty: Device shall have one year of warranty.
7) Battery: Power source may be taken from the shelter solar lighting system. The maximum power usage shall not exceed 18 watts.

Display

8) Message display panels shall have the capability to display two rows.
9) Pixel: Pixel size shall be at least 0.11" and in red color
10) Lens Material: Lexan or Acrylic

Placement of electronic message display device

11) The electronic message display device shall be mounted on the inner right side of the bus shelter when facing the bus shelter.

12) Message display device shall be mounted at least 7' from grade at a forward-tilt angle where it can be easily seen by passengers as they stand in the bus shelter and look in the direction from which the bus is coming as shown in Exhibit G.11.

Message Display Service

13) Run Operation for Message Display: Messages shall run in accordance with the working days and hours of operation of the Transit agencies, currently from 4:30a.m. to 11:00p.m. daily.

14) County will consider Contractor's proposed cost in section B.3, Replacement of Miscellaneous items in Form PW-2, to replace an electronic message display. Replacement shall display non-real time messages that can be transmitted wirelessly. County reserves the right to not use awarded Contractor for this project as a provider for the subsequent message displaying service. The system must have the capability for future services such as providing real-time bus arrival information.

SPECIFICATIONS FOR NORTH COUNTY SOLAR-POWERED BUS STOP SHELTER STRUCTURE (NO PSA PANELS, WITH ELECTRONIC MESSAGE DISPLAY)

Street furniture:

Shelters will have a minimum clearance of 42 inches from any fixed object or other obstruction (i.e., street lights, power poles, trees, etc.) except for a building or other structure located on private property.

ADA Requirements:

1. Shelters shall be in compliance with the Americans with Disabilities Act (ADA).

2. To the maximum extent allowed by legal or site constraints, bus stop pads shall have a clear length of 96 inches minimum measured perpendicular to the curb or vehicle roadway edge and a clear width of 60 inches minimum measured parallel to the vehicle as shown on Exhibit G.1.3 and Exhibit G.3.

3. Minimum clear floor area of 30 inches by 48 inches within the bus shelter. Accessible path of travel must be at least 48 inches wide.

4. The minimum turning space required for a 90-degree turn for a person in a wheelchair from a 36-inch path into another 36-inch path must be at least 36 by 84 inches.

5. All traffic control, installation, and other work performed under this contract must be in compliance with the ADA and its accessibility guidelines.

Other Requirements:

1. Drawings and Calculations: Mechanical drawings and calculations showing method of installation, material to be used, wind loads, and all necessary details must be submitted and approved by Public Works before installation of any systems are allowed. Contractor must also submit calculations showing the solar energy will adequately provide the electricity required in these specifications.

2. Permits: Contractor shall obtain all permits necessary for the work (i.e. Excavation permits, Encroachment permits, etc.), all of which shall be paid at Contractor's own expense.

3. Traffic Control: Contractor shall be responsible for setting traffic control at all project sites in compliance with the latest edition of Manual on Uniform Traffic Control Devices issued by the Federal Highway Administration.

SPECIFICATIONS FOR NORTH COUNTY SOLAR-POWERED BUS STOP SHELTER STRUCTURE (NO PSA PANELS, WITH ELECTRONIC MESSAGE DISPLAY)

4. Workmanship: All construction shall conform to the latest edition of Standard Specifications for Public Works Construction; all work and workmanship found to be substandard or inadequate by Public Works shall be corrected at no cost to the County.

P:\aspub\CONTRACT\BEN\TRANSITSTOP NORTH & SOUTH\2008 - JULY 2007\RFP\20 EXHIBIT F.1 - North.doc

EXHIBIT F.2

SPECIFICATIONS FOR NON-ADVERTISING BUS STOP BENCH WITH BACK SUPPORT AND ARMREST

General Requirement:

1- The benches are to be anchor-bolted to the sidewalk at a minimum of 3-inches deep into the concrete sidewalk with vandal-resistant hardware to prevent accidents, vandalism, or theft.

2- The benches must be powder-coated to facilitate graffiti abatement and routine maintenance.

3- The installation of the benches must be in compliance with the Americans with Disabilities Act (ADA) and its accessibility guidelines.

Below is the approximate description and dimensions of the bench:

- Shape: The overall contour and design shall be similar to that shown in Exhibit G.4.
- Dimensions: 6'-0" x 2'-7" x 2'-4".
- Seating surface: 1/4" x 2" steel bars and 2.5" O.D. steel pipe.
- Support: 1-1/8" square steel bar.
- Fasteners: 1/2" stainless Zinc Hilti anchors or County approved equal.
- Finish: Polyester powder finish.
- Style: LNI Aurora Series Model BL-6 Bench, Du Mor Bench 58, or Public Works approved equal.
- Color: Black.

SPECIFICATIONS FOR A TRASH RECEPTACLE WITH ALUMINUM LINER AND KEY-LOCKING DOME TOP

1. Style: LNI Aurora Series Model TC-32, Seating Component Model 32 CLTRID, Du Mor Receptacle 84, or Public Works approved equal.

2. Shape: Approximate the design shown in Exhibit G.5.

3. Nominal capacity: 32 gallons.

4. Color: Black

5. Outside frame made of steel slats with aluminum liners that sit inside to contain trash.

6. Mounting Floor mounting with steel angle plates (L-bracket) approximately 2" x 2" or equivalent with a hole for anchoring ½" stainless zinc Hilti anchors into the concrete at a minimum of 3-inches deep to secure receptacle to concrete pad or sidewalk firmly.

7. Placement of Trash Receptacle: Minimum clear distance of 42-inches to any other fixed object as shown in Exhibit G.6.1 for bus stop with concrete improvement and Exhibit G.6.2 for bus stop without concrete improvement.

8. The trash receptacle shall be placed at least 1' – 6" away from the back of the curb and 1' away from the back of curb.

9. Orientation of a Trash Receptacle:
   A trash receptacle should always be placed on the right side of the bus stop. The right side of the bus stop is determined by standing at the bus stop and facing the street. A trash receptacle may not be placed differently due to existing objects or geographic constraints without Director/Designee consent.

10. Dome or rain bonnet shall be mounted on top of trash receptacle. The dome or rain bonnet must be firmly secured with locking ring or hinges to the outside frame of the trash receptacle to prevent unauthorized removal of the dome or the inner drum. Dome or rain bonnet and outside trash receptacle frame must have lock hasps for padlock. Contractor will not be responsible for providing padlock.

11. The aluminum liner must be secured with a chain or high tensile strength wire to the frame of the trash receptacle or secured in an alternative way acceptable to Director/Designee to prevent unauthorized removal of the liner.

12. Entire assembly must be powder coated to resist corrosion and weathering.

SPECIFICATIONS FOR A TRASH RECEPTACLE WITH ALUMINUM LINER AND KEY-LOCKING DOME TOP

13. **ADA Requirements:** Trash receptacles shall be installed in compliance with the Americans with Disabilities Act (ADA) of 1990 and all other applicable State and Federal accessibility laws, whichever is more stringent.

P:\aspub\CONTRACT\BEN\TRANSITSTOP NORTH & SOUTH\2008 - JULY 2007\RFP\23 EXHIBIT F.3.doc

EXHIBIT F.4

SPECIFICATIONS FOR SOLAR-POWERED LIGHT POLE MODELS i-STOP™ F1/EverGEN™ Solar Engine SE-10

EQUIPMENT SPECIFICATIONS:

1) Style: Model No. i-STOP™ F1 or its replacement EverGEN™ Solar Engine SE-10 with the optional LED-4SE luminaire, both manufactured by Carmanah Technologies Inc., or a Public Works approved equal.

2) Solar Panel: The width and length of the solar panel, including frame, shall have a dimension range from 16 to 36 inches that consist of a minimum area of 400 square inches. The solar panel shall have a minimum output of 25 watts (W) during the peak charging time of 1 p.m. The panel shall consist of Mono or Polycrystalline silicon cells with by-pass diodes to keep broken and/or shaded sections from interfering with the output of the functioning sections. The solar panel must be protected from UV rays and shall have a minimum of a ten-year warranty from output degradation below 25W at peak charging time and panel deterioration. Contractor shall submit supporting electrical power calculation for review.

3) Battery: The battery for the solar light pole, when fully charged, shall have a reserve capacity sufficient to provide the required illumination for a minimum of three days while operating 14.5 hours per day without any solar charging. The battery shall be valve regulated, 12 Volts (V) nominal and rated at least 20 Ampere-Hours (AH) at the 20-hour rate. The battery shall be maintenance free, use solid or gelled electrolyte, and shall have a minimum of a five-year prorated warranty.

4) Electrical wiring and connections: Power conductors connecting the solar panel, charge controller, battery, light controller and luminaire assembly shall be copper, a minimum capacity of stranded No. 14 American Wire Gauge (AWG). All other signal and control wiring shall be copper, and may range from No. 16 to No. 20 AWG. All exposed metallic surfaces from the solar panel frame to the pole shall be grounded with a minimum No. 14 AWG copper conductor that are bonded to a suitably ground rod or a grounding plate. Connectors shall be waterproof. Circuit board and electronic components shall be conformal coated.

5) Light Emitting Diodes (LED): High intensity white LED lamp unit or Public Works approved equivalent that provides a minimum of 2.0 foot candles (fc) of light, above ambient light levels, for the illumination area when measured at the ground. Luminaire shall have a minimum of four LEDs per luminaire assembly.

SPECIFICATIONS FOR SOLAR-POWERED LIGHT POLE MODELS i-STOP™ F1/EverGEN™ Solar Engine SE-10

Each LED shall have an average life of 100,000 lamp hours and will require minimal maintenance. The luminaire shall be embedded in a platform as one unit for convenient replacement. If 25 percent of the LEDs quit working, a minimum of 1.3 fc of light, above ambient light levels, shall still be provided. The luminaire should be adjustable by turning it a minimum of 180 degrees away from the solar panel's orientation to maximize sun exposure and flexibility of lighting area. The luminaire assembly shall have a lens/diffuser as the outermost protective covering. The lens/diffuser shall be constructed to endure severe impact and vandalism and shall be mounted with vandal-proof hardware. The lens shall be shatter-resistant and have a minimum of a one-year warranty.

6) Enclosed Power Unit (EPU): The EPU shall be constructed of corrosion-resistant aluminum covered by the solar panel and shall be weather-resistant and fastened to the pole using tamperproof security hardware. The EPU shall be equipped with a lockable housing area so that the battery, system controller, and DC inverter ballast are secured within the housing area. The EPU shall have a minimum of a ten-year warranty.

7) Solar Lighting Controller: The solar lighting controller must have a "Low Voltage Dropout" setting, or features approved by Public Works, to disconnect all outputs at a certain battery voltage in order to avoid the battery from being discharged fully, harming the battery's recharging ability and shortening its life. Controller must be protected with a fuse that is sealed inside the EPU. The controller shall have a minimum of a five-year warranty.

8) Self-Test: The system shall be equipped with a self-test switch. Activation of the self-test switch must be possible without opening the EPU.

9) Pole: Shall be a round 120-inch-long, 2-inch-diameter, steel pole, or Public Works approved equivalent, with solar panel and battery enclosure unit mounted at the top of the pole. Exhibit G.7 shows the approximate design.

10) Paint: Solar light poles must be painted silver. Paint must be applied with a baked polyurethane finish. All exterior aluminum components shall have polyurethane powder coating.

11) Transit Schedule Display Unit: Models for Metropolitan Transportation Authority (Metro) shall be manufactured by Laird Plastics [Tel: (718)257-4444].

SPECIFICATIONS FOR SOLAR-POWERED LIGHT POLE MODELS i-STOP™ F1/EverGEN™ Solar Engine SE-10

a) The unit shall be a rectangular metal cube that is approximately 23-$^{3}/_{8}$ inches high x 8 inches wide x 7 inches long. Approximate designs shown on Exhibit G.8. Display surface must be covered with transparent acrylic panel for clear display and protection purposes. The four display surfaces will be 22-$^{1}/_{8}$ inches high x 5-$^{5}/_{8}$ inches wide. The unit must have sufficient space between the display surface and acrylic panel to accommodate a Metro insert that is 23-$^{1}/_{8}$ inches high x 6-$^{5}/_{8}$ inches wide. The panels must be secured by vandal-resistant screws to safely keep inserts inside the panel. A sample of a Metro display unit may be viewed at the bus stop located on eastbound Cesar Chavez Avenue at nearside of Vignes Street in Los Angeles.

12) Durability:

a. Solar light poles shall be designed to withstand minimum wind loads of 75 mph.

b. Solar light poles must be designed to withstand a variety of conditions including, at a minimum, inclement weather, salt air, high winds, bright sunlight, and earthquakes.

c. All parts and components shall be secured with tamperproof security hardware.

13) Performance Guarantees:

a. Run Operation: Lighting will be from dusk to dawn.

b. Operating Range: Temperature range shall be from –40 degrees Farenheit to +176 degrees Fahrenheit (-40 degrees Celsius to +80 degrees Celsius). Humidity operating range shall be from 20 percent to 90 percent humidity.

c. Illumination Area: The area illuminated by the light shall be a minimum of a 5-foot-diameter circular area on the ground when the light source is 10 feet above the ground.

SPECIFICATIONS FOR SOLAR-POWERED LIGHT POLE MODELS i-STOP™ F1/EverGEN™ Solar Engine SE-10

d. Original Manufacturer's Specification Sheets: Original Manufacturer's Specification Sheets must be provided for all components of the solar light poles.

e. Warranty: The overall integrity of the system shall have a minimum of a two-year warranty.

INSTALLATION REQUIREMENTS:

1) Base: Contractor shall replace, relocate, or reinstall solar light pole with surface-mount method with supporting structural calculations approved by the Director/Designee before work commences.

2) Placement: As shown on Exhibit G.9, the solar light pole must be placed on the right-hand side of the bus shelter when facing the bus shelter from the street or at either side of the bus stop sign pole if there is no bus shelter. Depending on the terrain of each site, the solar light pole must be installed as close as possible to the edge of curb, but no less than 30 inches perpendicular from the edge of curb (36 inches from face of curb) to avoid obstructing the bus path while still allowing adequate clearances for wheelchair access. Alternate locations must be reviewed and approved by Public Works.

3) Mounting of Schedule Display Unit: The top of the transit schedule display unit shall be mounted 5 feet 0 inches +/- ½ inch above the ground so that the information displayed is fully accessible by persons in wheelchairs.

4) Orientation: The solar panel must be oriented to face south to southwest to provide solar charging capacity sufficient to meet all requirements noted herein during the shortest daylight periods of the year.

5) Underground Utility: Contractor must verify and avoid conflicts with underground utilities, if any.

6) Mechanical Drawings: Mechanical drawings showing method of installation, material to be used, and all necessary details must be submitted and approved by Public Works before installation of any systems are allowed.

SPECIFICATIONS FOR SOLAR-POWERED LIGHT POLE MODELS i-STOP™ F1/EverGEN™ Solar Engine SE-10

7) Permits: Contractor shall obtain all permits necessary for the work (i.e. excavation permits, encroachment permits, etc.), all of which shall be paid at Contractor's own expense.

8) Traffic Control: Contractor shall be responsible for setting traffic control at all project sites in compliance with the latest edition of Manual on Uniform Traffic Control Devices issued by the Federal Highway Administration.

9) Workmanship: All construction shall conform to the latest edition of Standard Specifications For Public Works Construction; all work and workmanship found to be substandard or inadequate by Public Works shall be corrected at no cost to the County.

10) American Disabilities Act: All traffic control, installation, and other work performed under this contract must be in compliance with the Americans with Disabilities Act of 1990 (ADA). Light poles must only be installed a minimum of 36 inches from the face of curb and 42 inches on either side of an obstruction.

11) Prior to Public Works acceptance of the solar light pole and its installation, the functionality of the solar light pole shall be demonstrated. The functionality will include illumination area measurements, luminaire output, battery charging capacity, and battery storage capacity at each site.

P:\aspub\CONTRACT\BEN\TRANSITSTOP NORTH & SOUTH\2008 - JULY 2007\RFP\24 EXHIBIT F.4.doc

EXHIBIT G

BUS STOP SHELTER DIAGRAMS FOR MAINTENANCE PROGRAM – NORTHERN UNINCORPORATED AREAS OF LOS ANGELES COUNTY

DIAGRAM OF SOLAR POWERED / NON-ADVERTISING BUS SHELTER
(NO PSA PANELS) BLACK FRAME AND RED TILE ROOF WITH BACK SUPPORT BENCH

EXHIBIT G.1.1

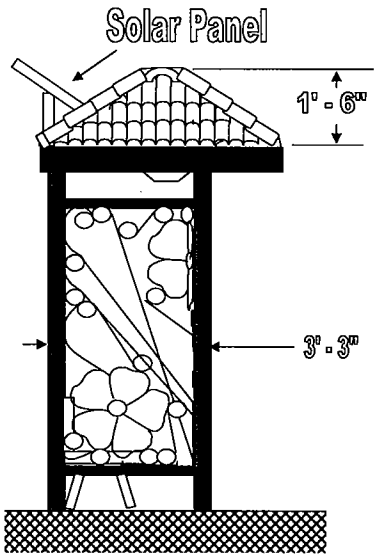

LEFT SIDE ELEVATION

(NOT TO SCALE)

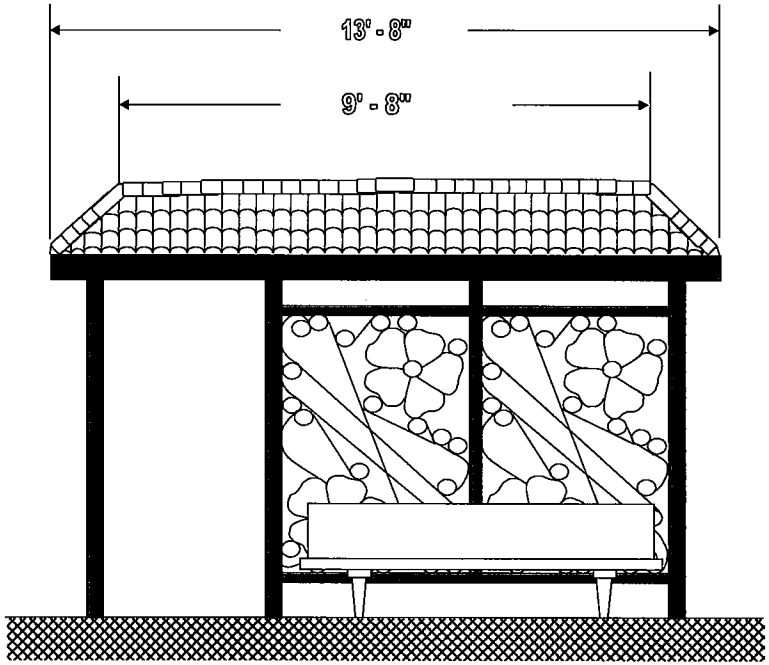

FRONT ELEVATION

(NOT TO SCALE)

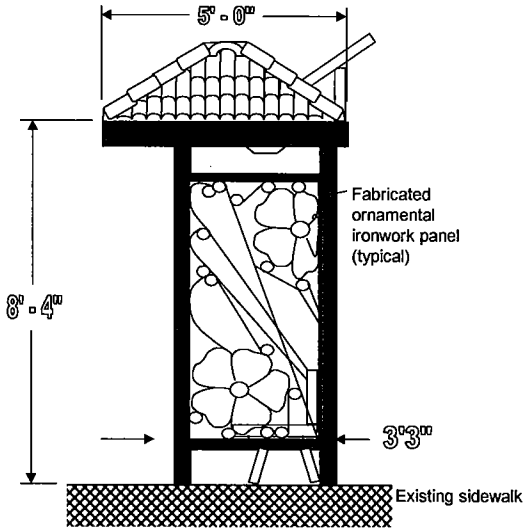

RIGHT SIDE ELEVATION

(NOT TO SCALE)

NOT All dimensions are approximations.

DIAGRAM OF TYPICAL NON-ADVERTISING BUS SHELTER (No PSA Panels)
WITH STREET RIGHT-OF-WAY AND MINIMUM CLEARANCES

EXHIBIT G.1.2

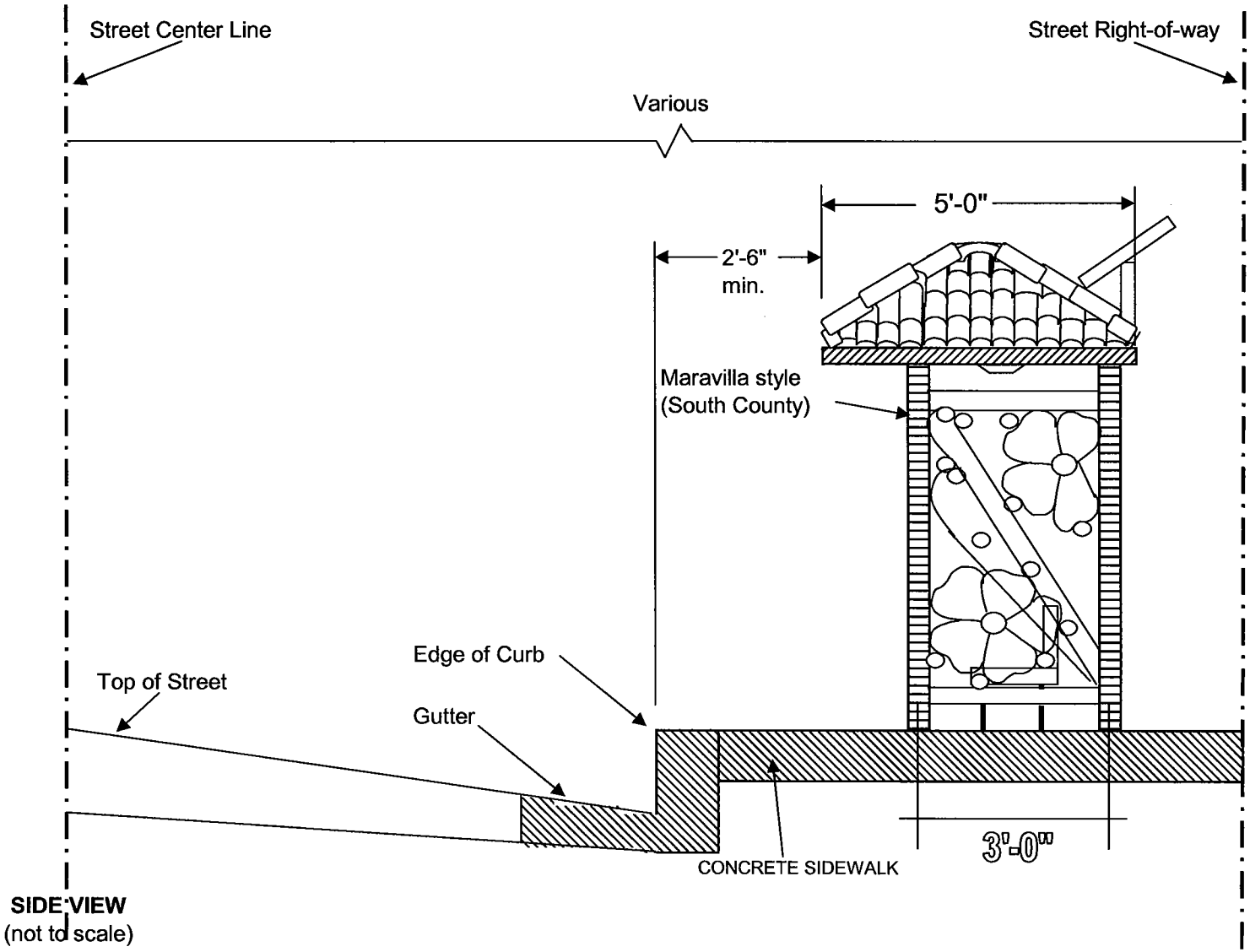

SIDE VIEW
(not to scale)

DIAGRAM OF STREET RIGHT-OF-WAY AND MINIMUM CLEARANCES FOR TYPICAL NON-ADVERTISING BUS SHELTER (NO PSA Panels)

EXHIBIT G.1.3

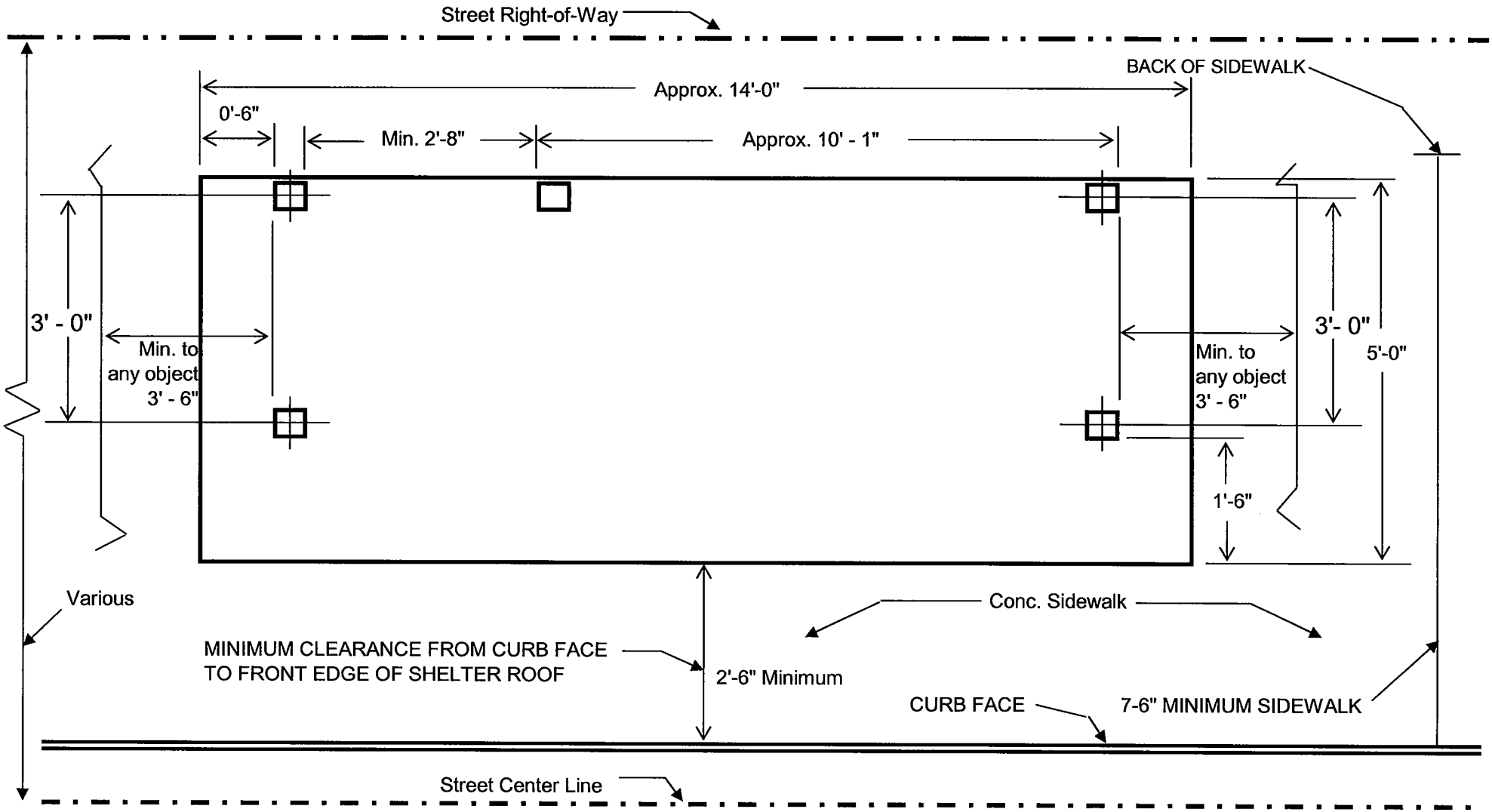

TOP VIEW
(not to scale)

DIAGRAM OF SOLAR POWERED / NON-ADVERTISING BUS SHELTER
(WITH PSA PANELS) BLACK FRAME AND RED TILE ROOF WITH BACK SUPPORT BENCH

EXHIBIT G.2.1

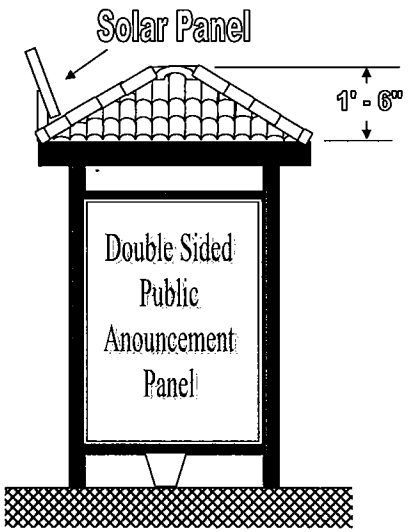

LEFT SIDE ELEVATION

(NOT TO SCALE)

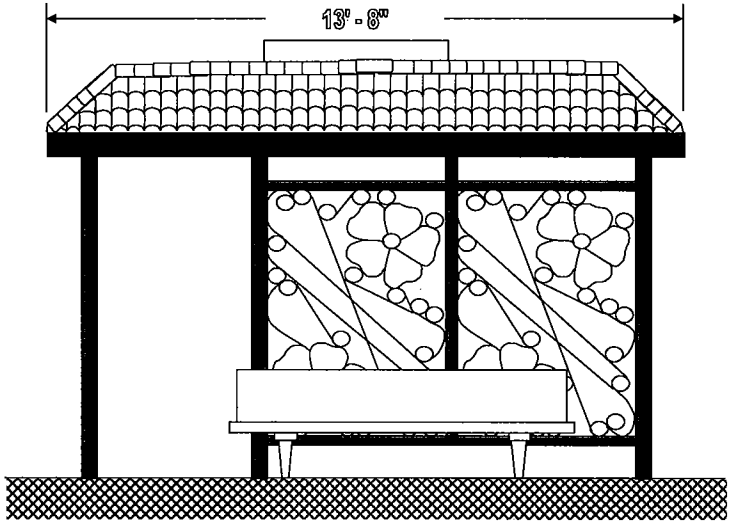

FRONT ELEVATION

(NOT TO SCALE)

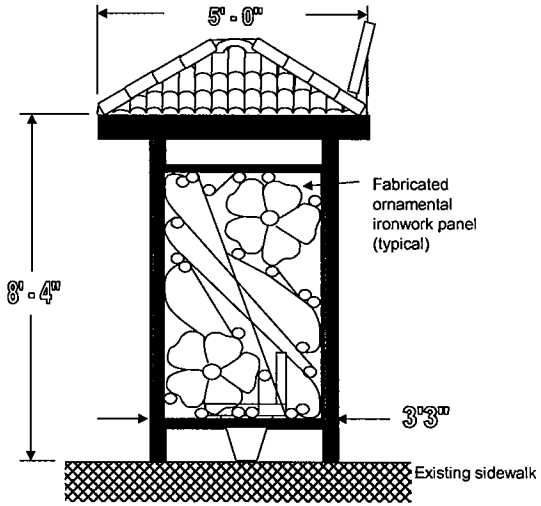

RIGHT SIDE ELEVATION

(NOT TO SCALE)

NOTE: All dimensions are approximations.
The left side has a double sided public anouncement panel.

P:\aspub\CONTRACT\BEN\TRANSITSTOP NORTH & SOUTH\2008 - JULY 2007\RFP\[27 EXHIBIT G drawings ver.2.xls]EXHIBIT G.2.3

01/16/2008, 5:38 PM

DIAGRAM OF TYPICAL NON-ADVERTISING BUS SHELTER (with PSA Panels)
WITH STREET RIGHT-OF-WAY AND MINIMUM CLEARANCES

EXHIBIT G.2.2

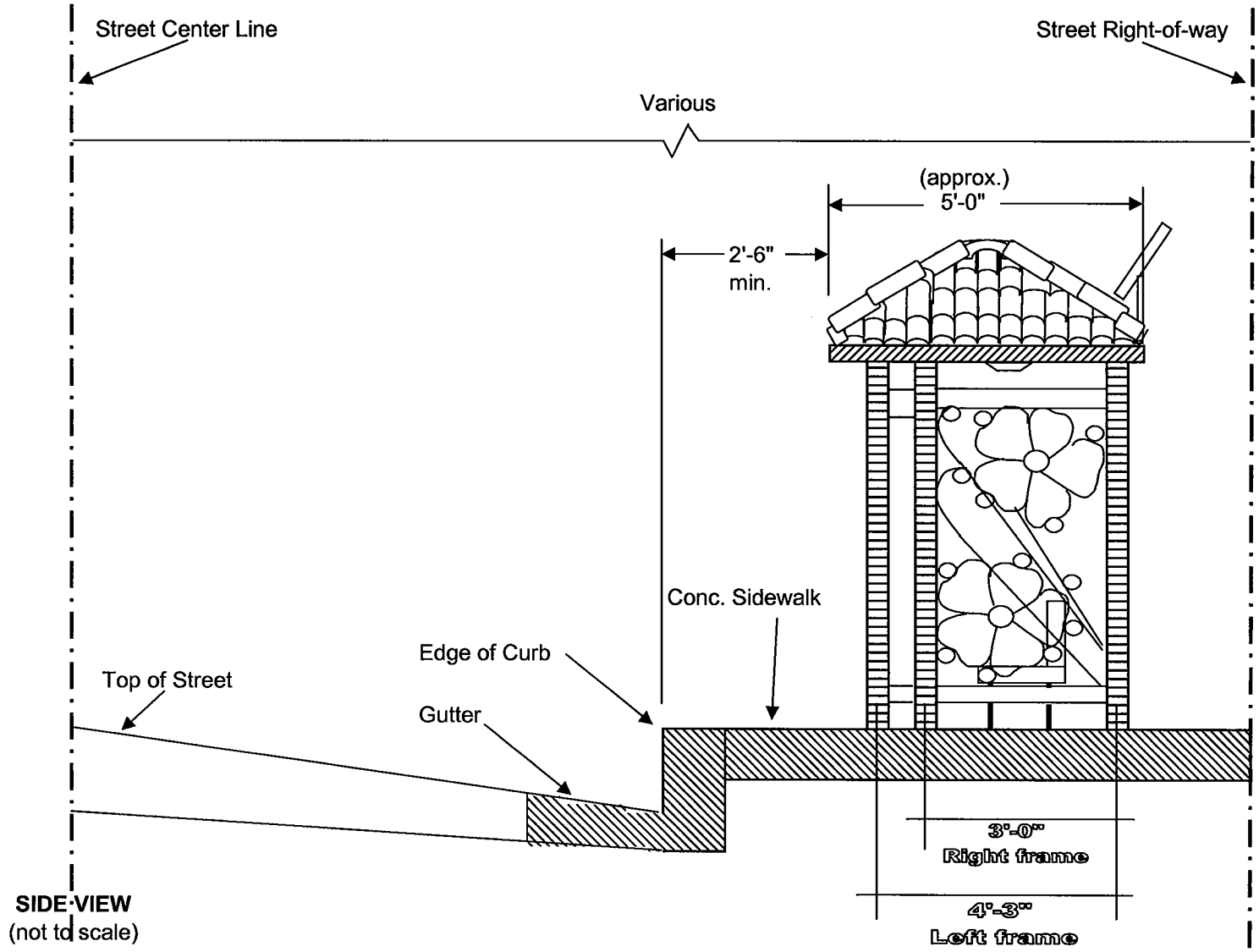

SIDE VIEW
(not to scale)

DIAGRAM OF STREET RIGHT-OF-WAY AND MINIMUM CLEARANCES FOR TYPICAL NON-ADVERTISING BUS SHELTER (PSA Panels)

EXHIBIT G.2.3

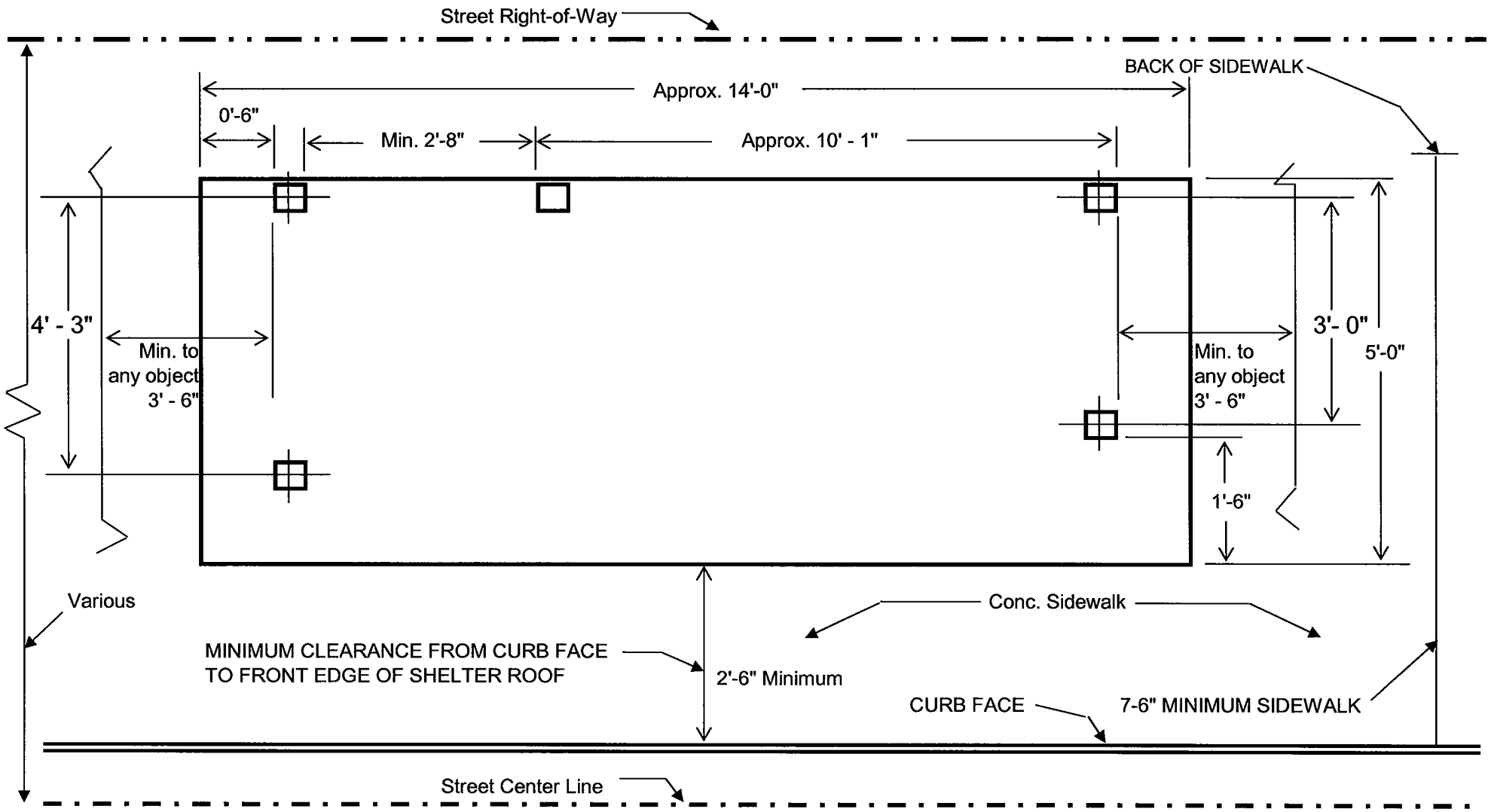

TOP VIEW
(not to scale)

DIAGRAM OF AMERICAN DISABILITIES ACT (ADA)
REQUIREMENT FOR BUS STOP

EXHIBIT G.3

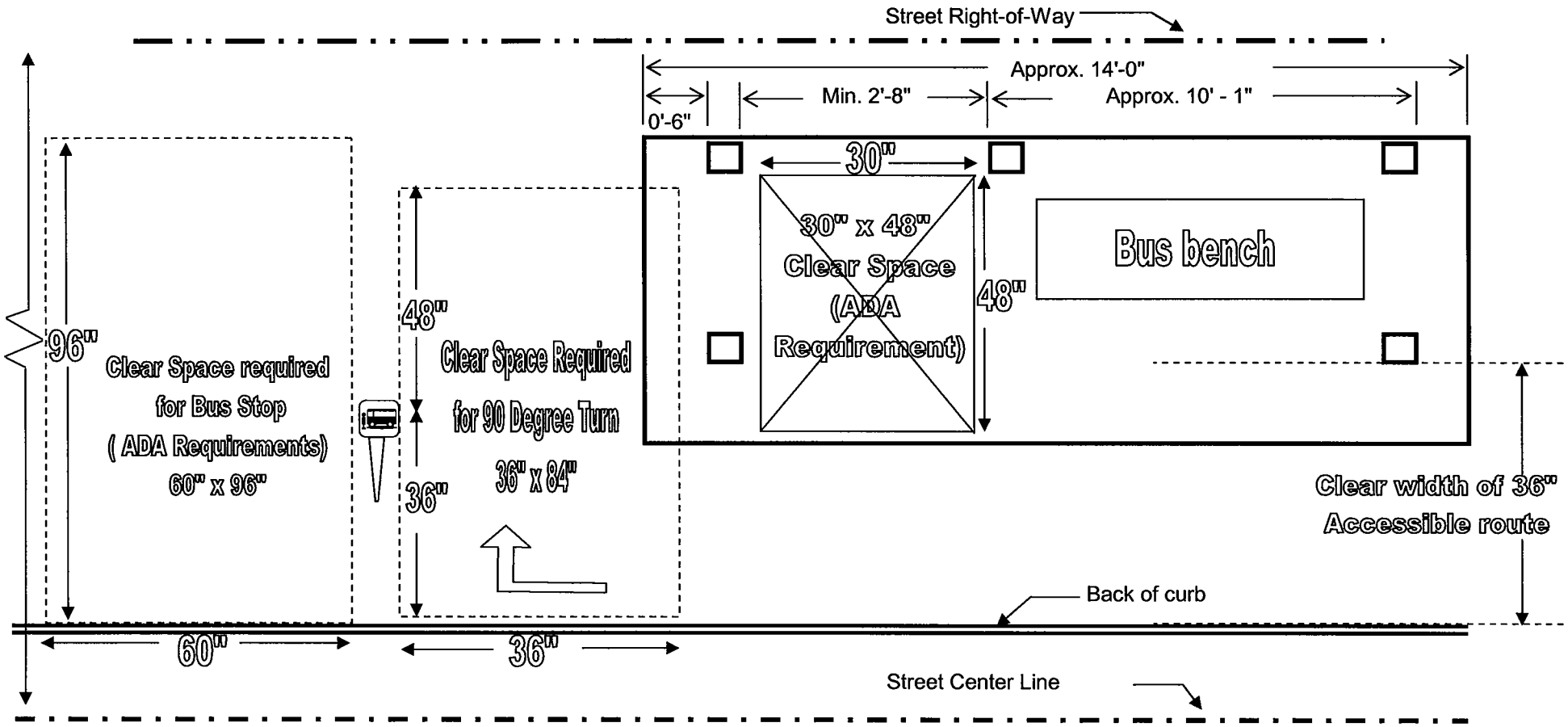

(NOT TO SCALE)

EXHIBIT G.4

Diagram of Black Non-Advertising Metal Bench with Gloss Powder Coated Finish (6' Seating Area)

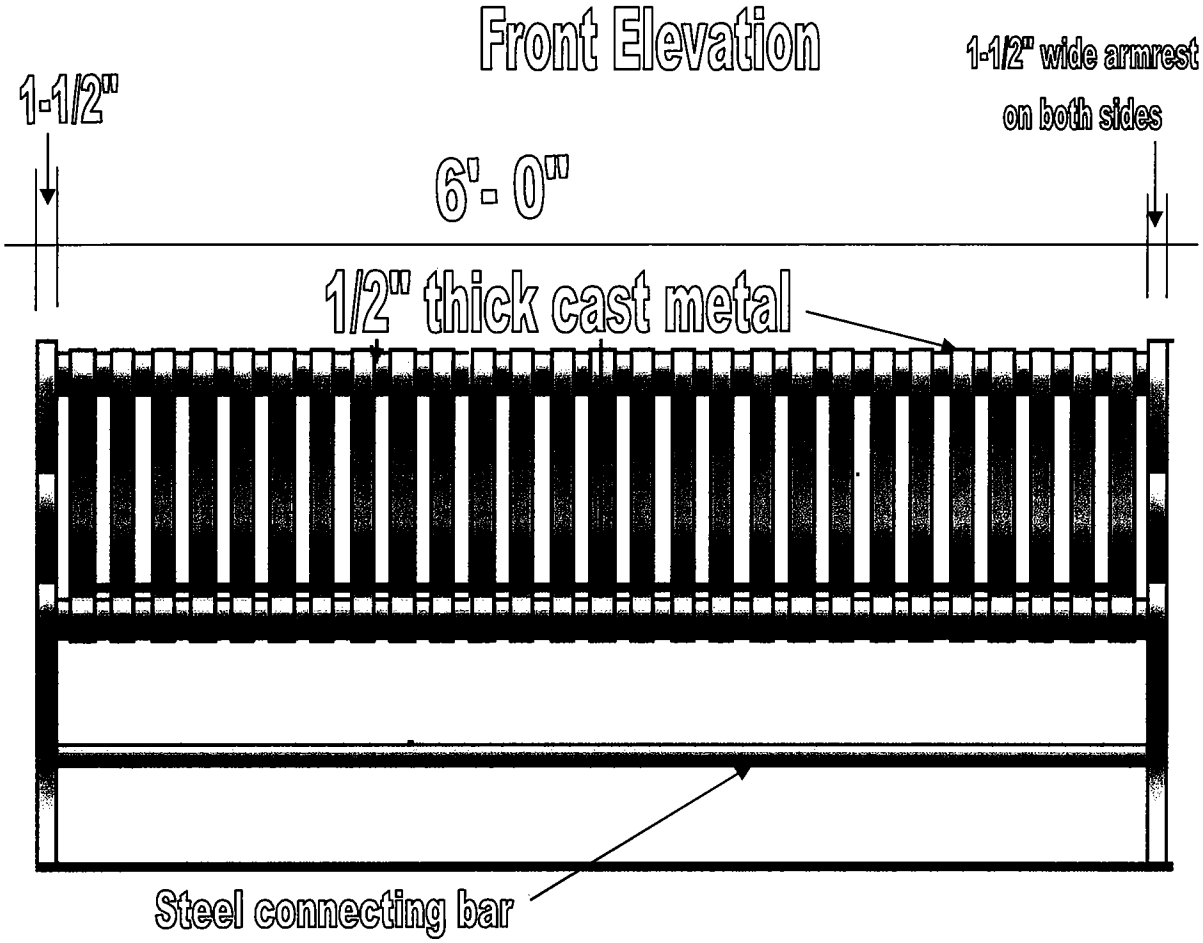

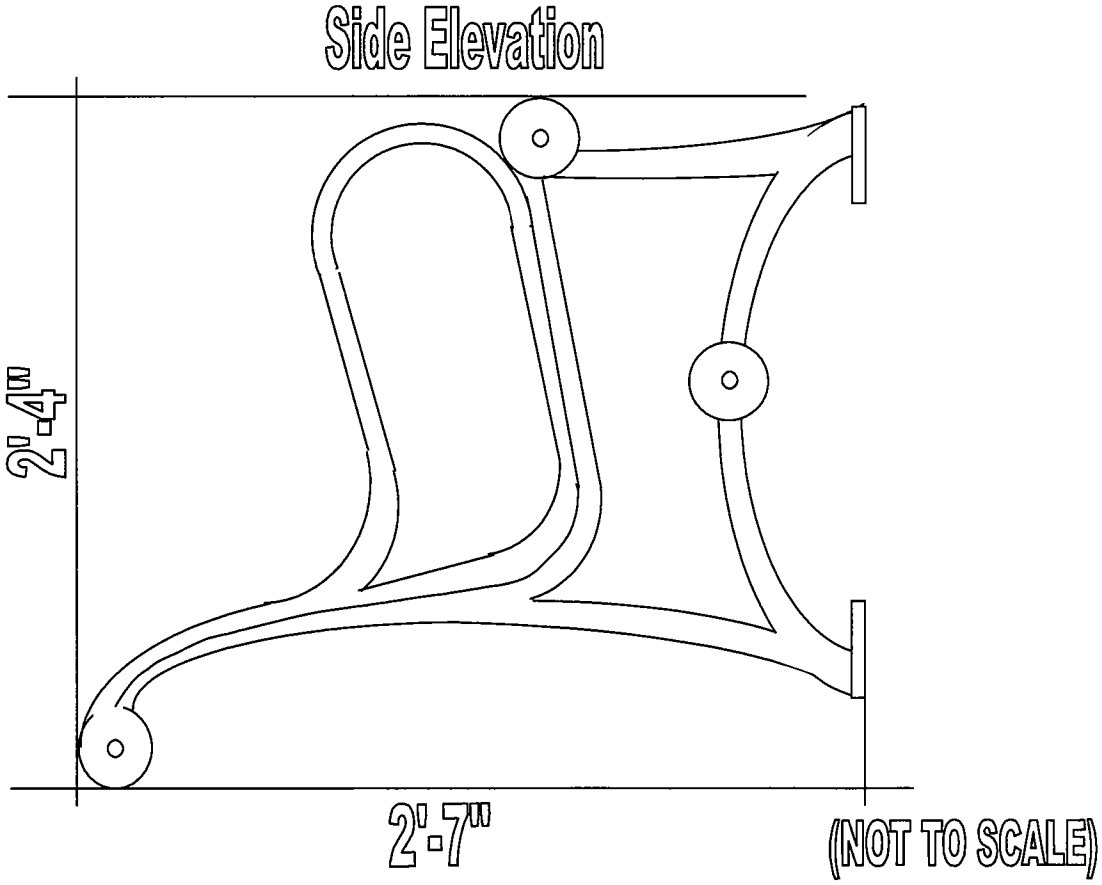

DIAGRAM OF 32-GALLON TRASH RECEPTACLE WITH HARD PLASTIC LINER AND KEY-LOCKING DOME TOP

EXHIBIT G.5

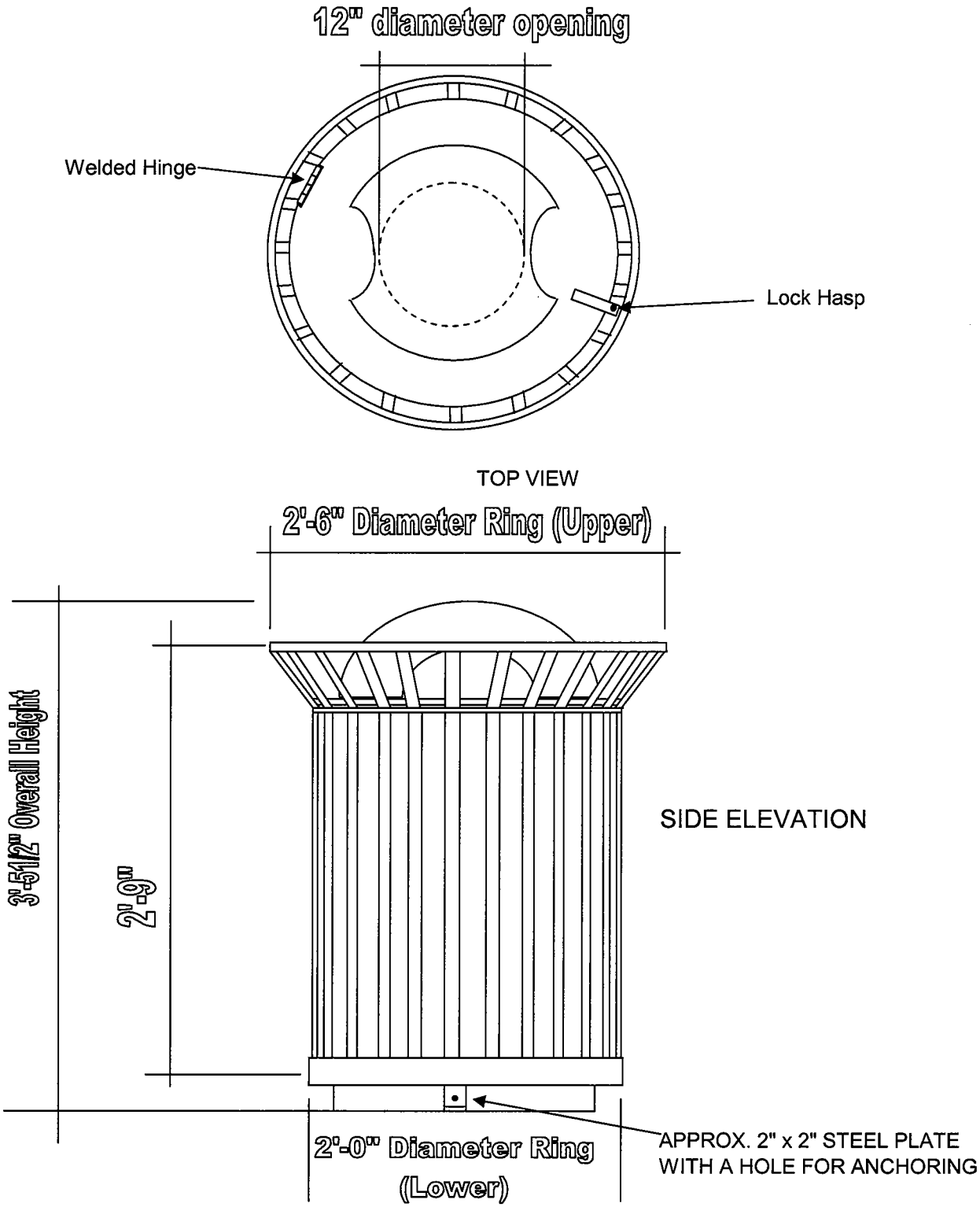

(NOT TO SCALE)

DIAGRAM OF TRASH RECEPTACLE PLACEMENT AT CONCRETE IMPROVED BUS STOP

EXHIBIT G.6.1

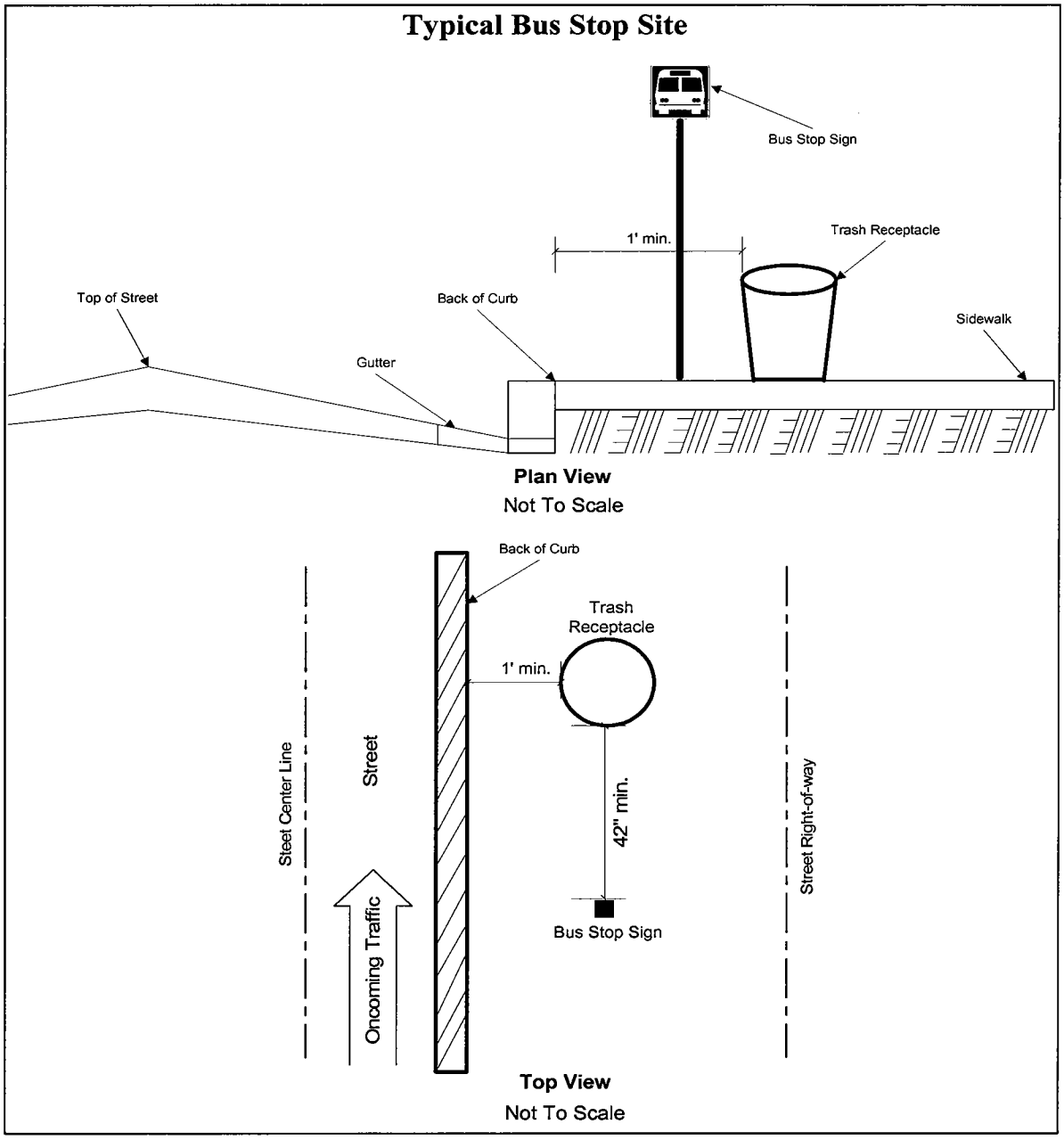

DIAGRAM OF TRASH RECEPTACLE PLACEMENT AT UNIMPROVED BUS STOP

EXHIBIT G.6.2

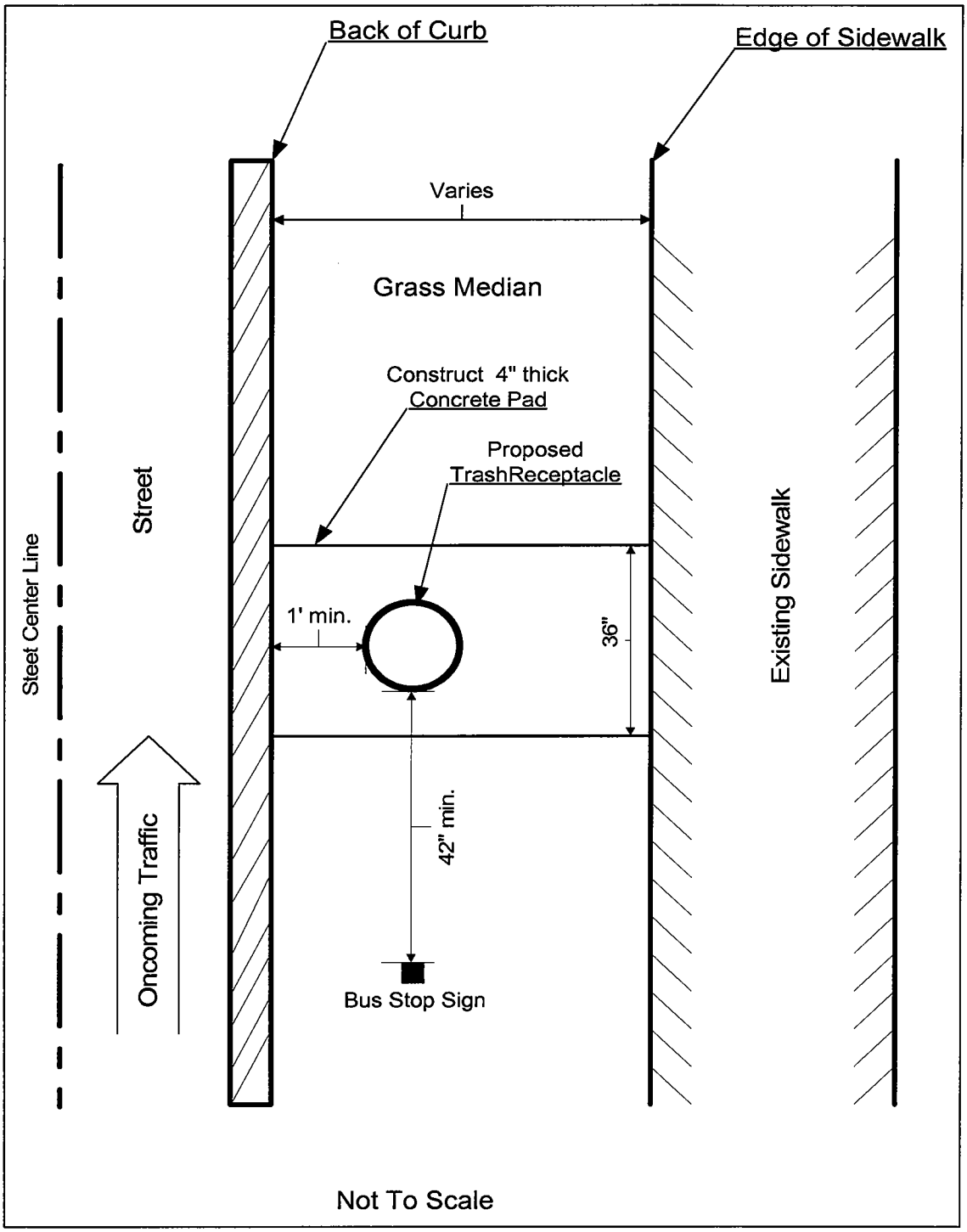

DIAGRAM OF STAND-ALONE
SOLAR POWERED LIGHT POLE

EXHIBIT G.7

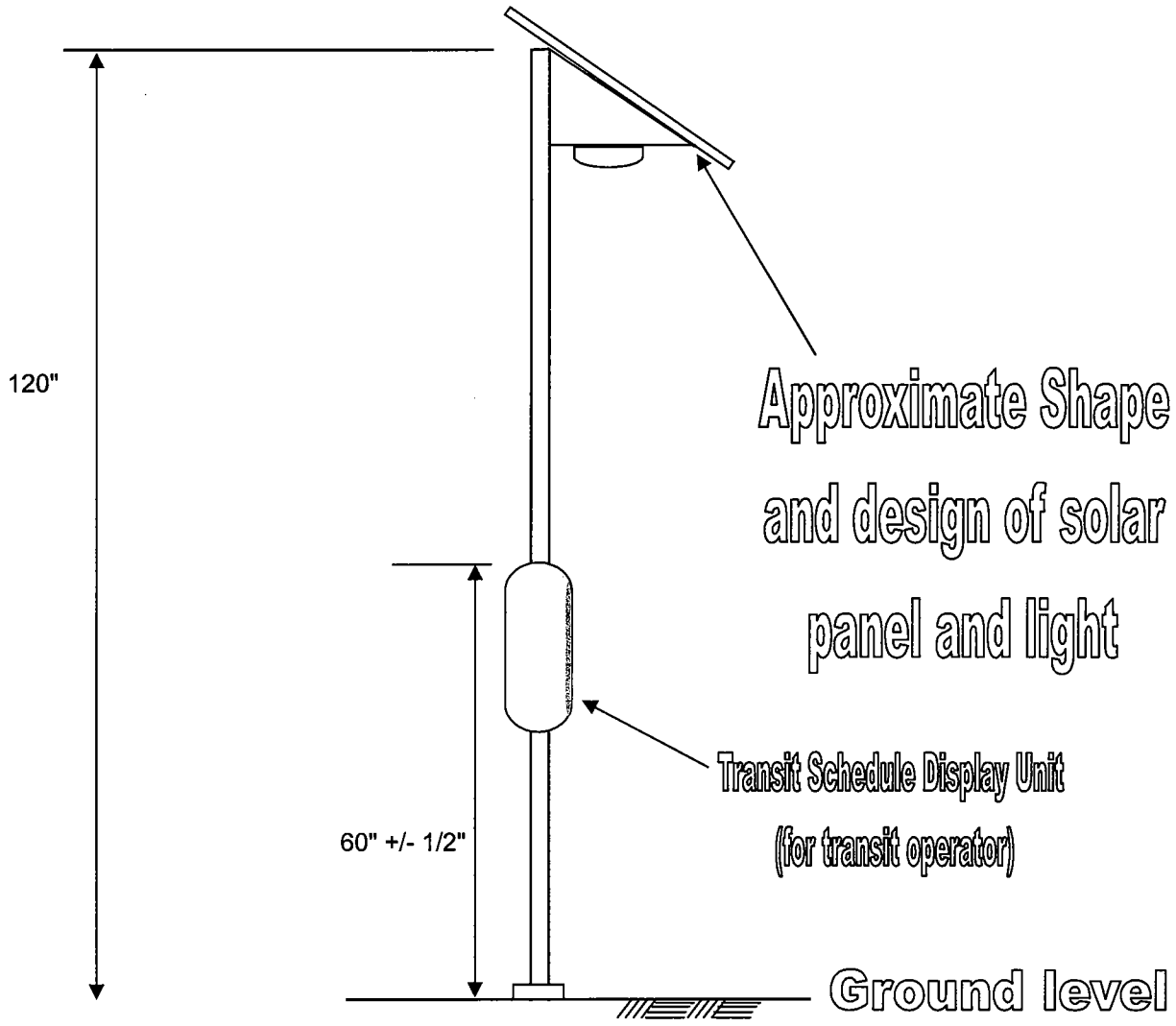

ELEVATION VIEW OF SOLAR-POWERED LIGHT POLE
(DRAWING NOT TO SCALE)

DIAGRAM OF DISPLAY UNIT FOR MTA BUS SCHEDULES AND ROUTES

EXHIBIT G.8

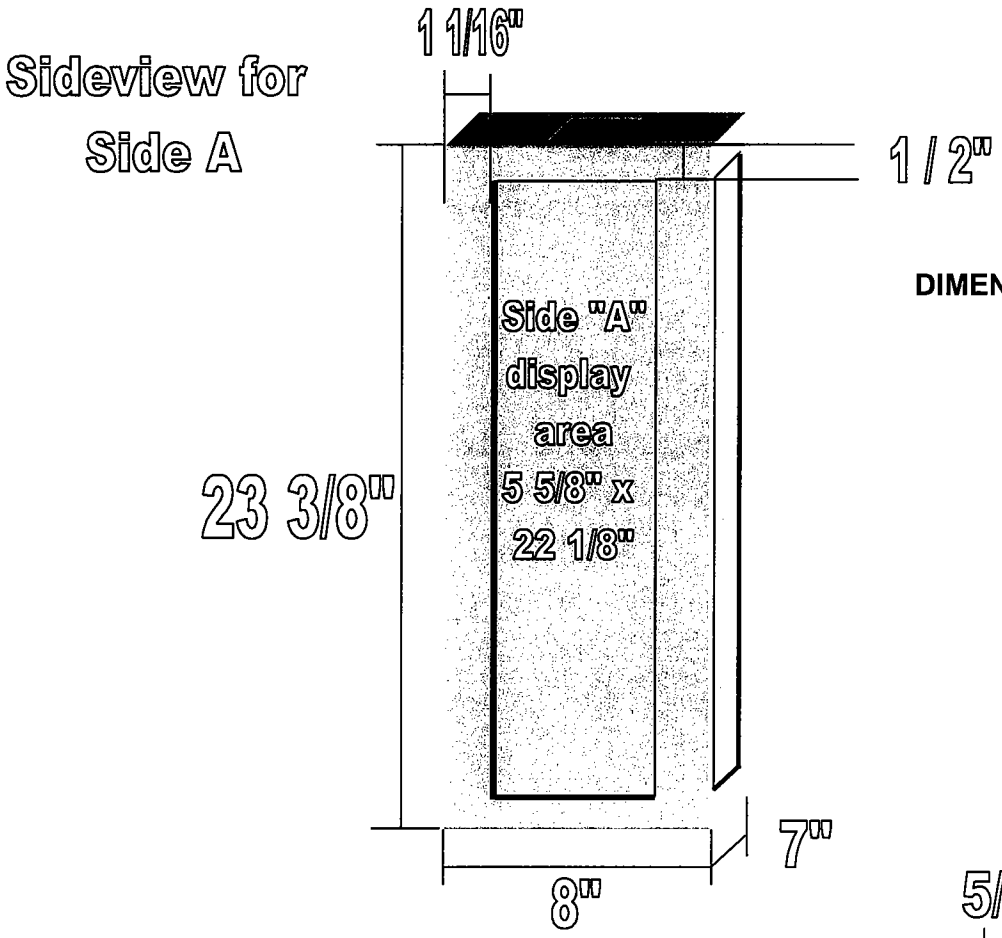

DIMENSIONS ARE APPROXIMATE (NOT TO SCALE)

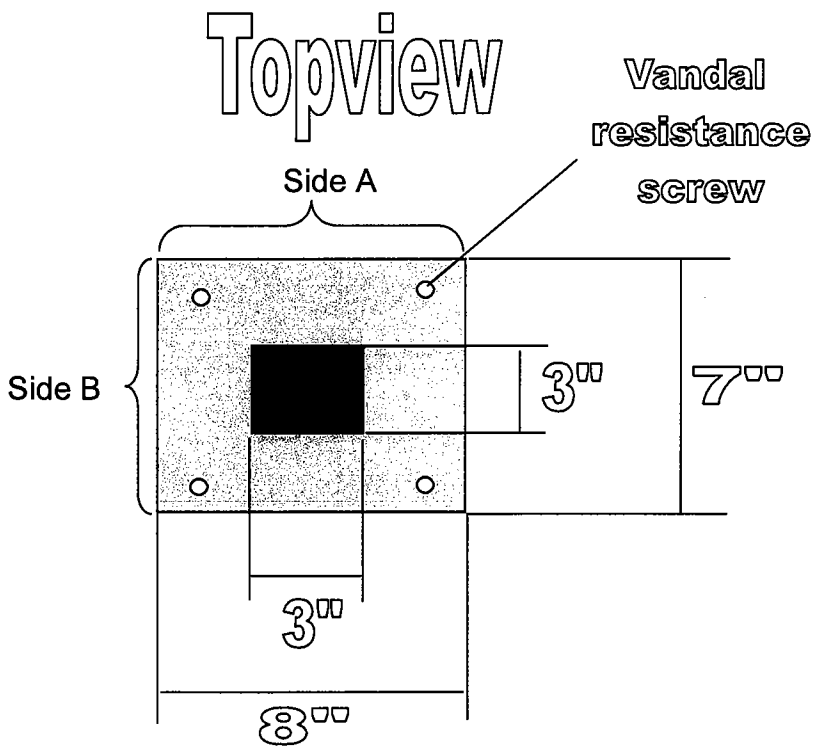

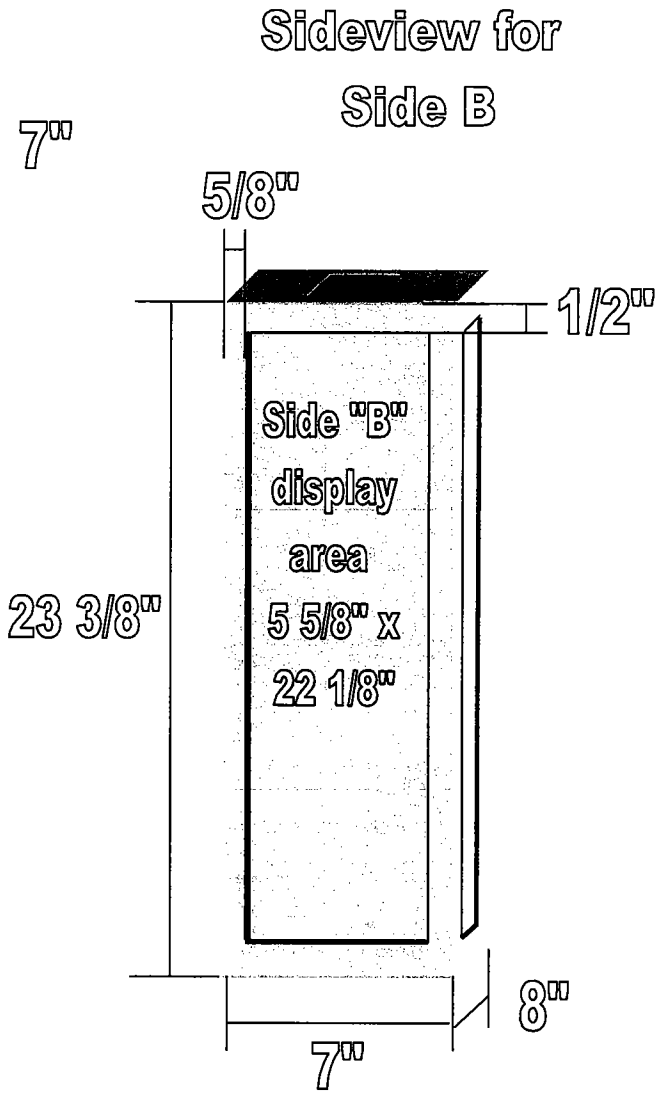

DIAGRAM OF ROUTE/MAP CAROUSEL DISPLAY UNIT FOR FOOTHILL TRANSIT (Type I)

EXHIBIT G.9

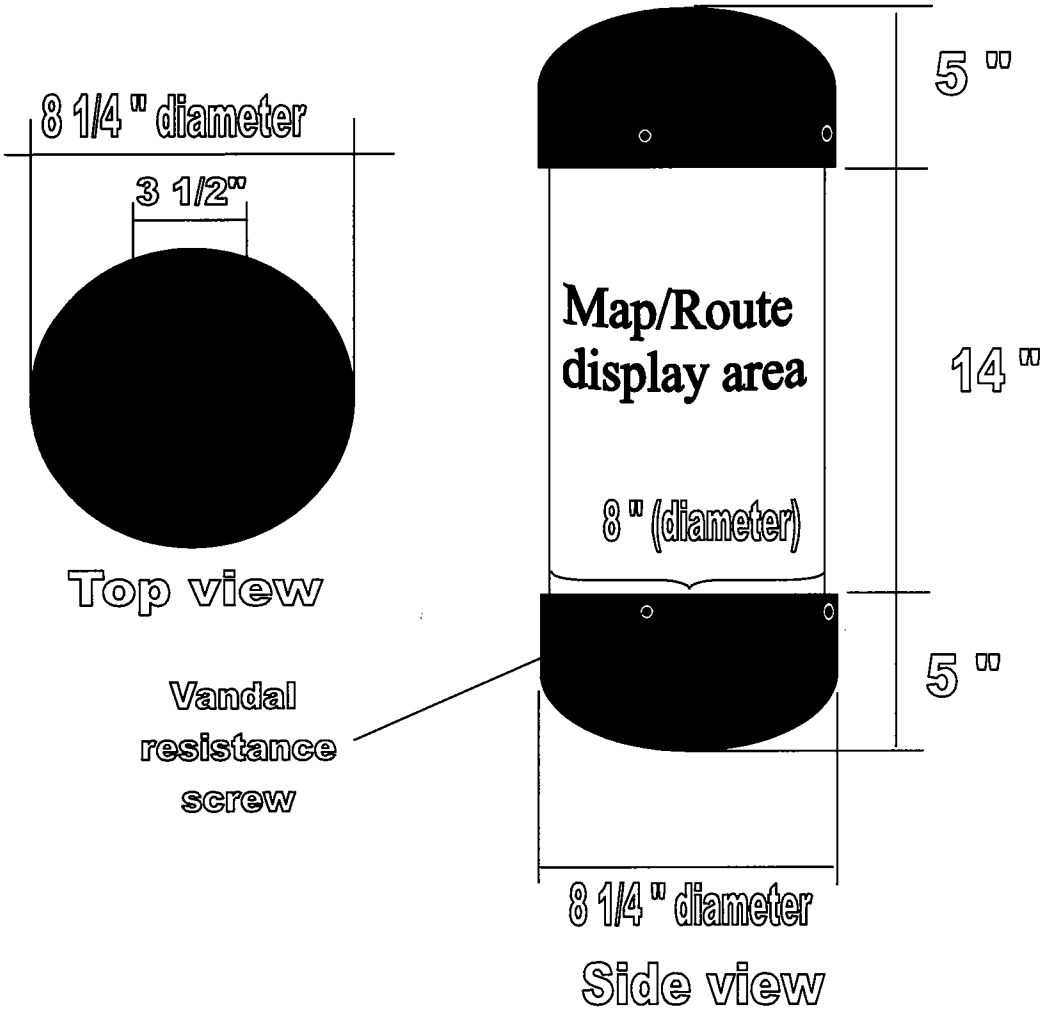

Foothill Transit Route Display Unit

DIMENSIONS ARE APPROXIMATE (NOT TO SCALE)

DIAGRAM OF ROUTE/MAP CAROUSEL
DISPLAY UNIT FOR FOOTHILL TRANSIT (Type II)

EXHIBIT G.10

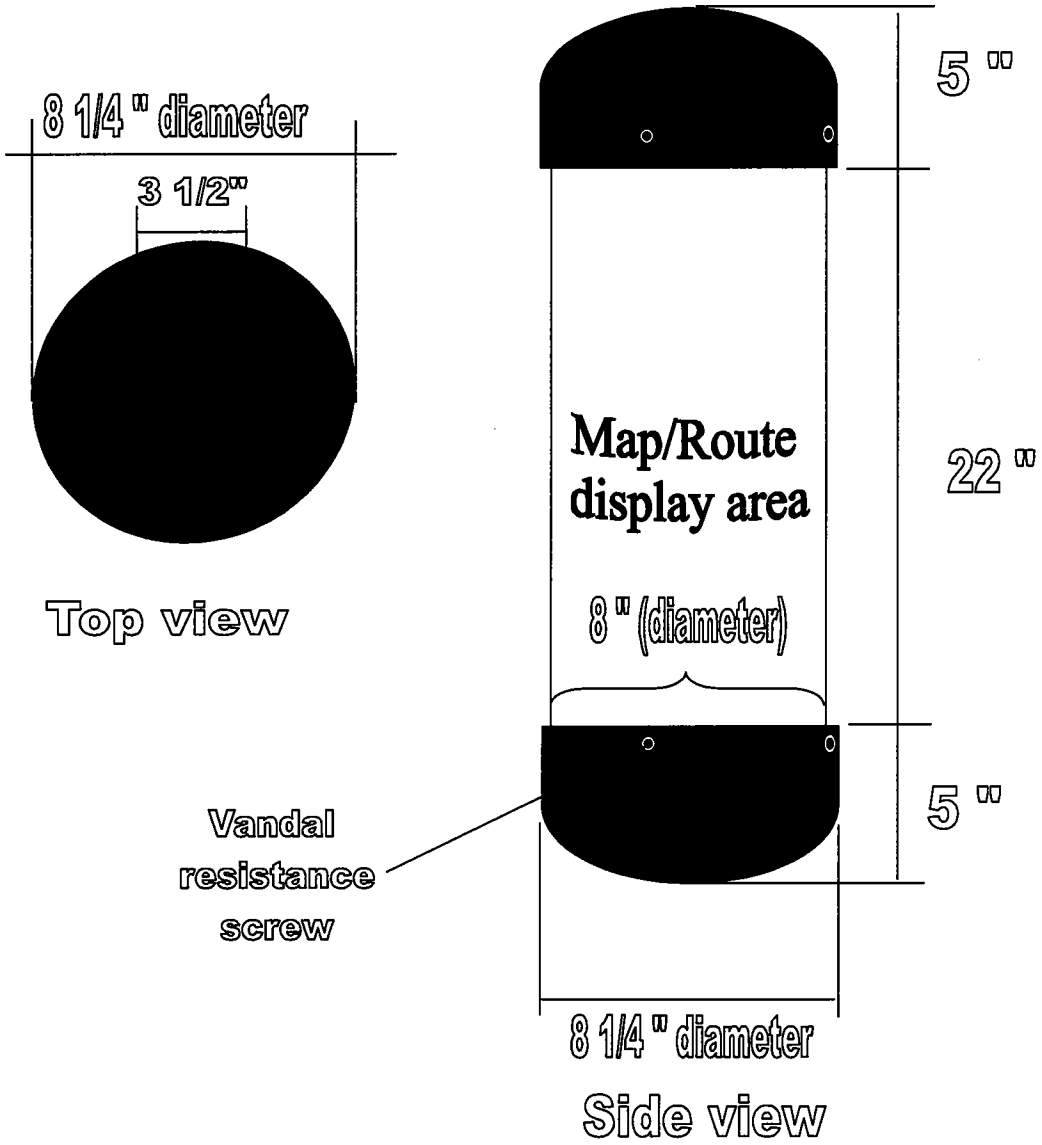

Foothill Transit
Route Display Unit

DIMENSIONS ARE APPROXIMATE
(NOT TO SCALE)

P:\aspub\CONTRACT\BEN\TRANSITSTOP NORTH & SOUTH\2008 - JULY 2007\RFP\[27 EXHIBIT G drawings ver.2.xls]EXHIBIT G.2.3

01/16/20085:39 PM

DIAGRAM OF PLACEMENT OF SOLAR LIGHT POLES

EXHIBIT G.11

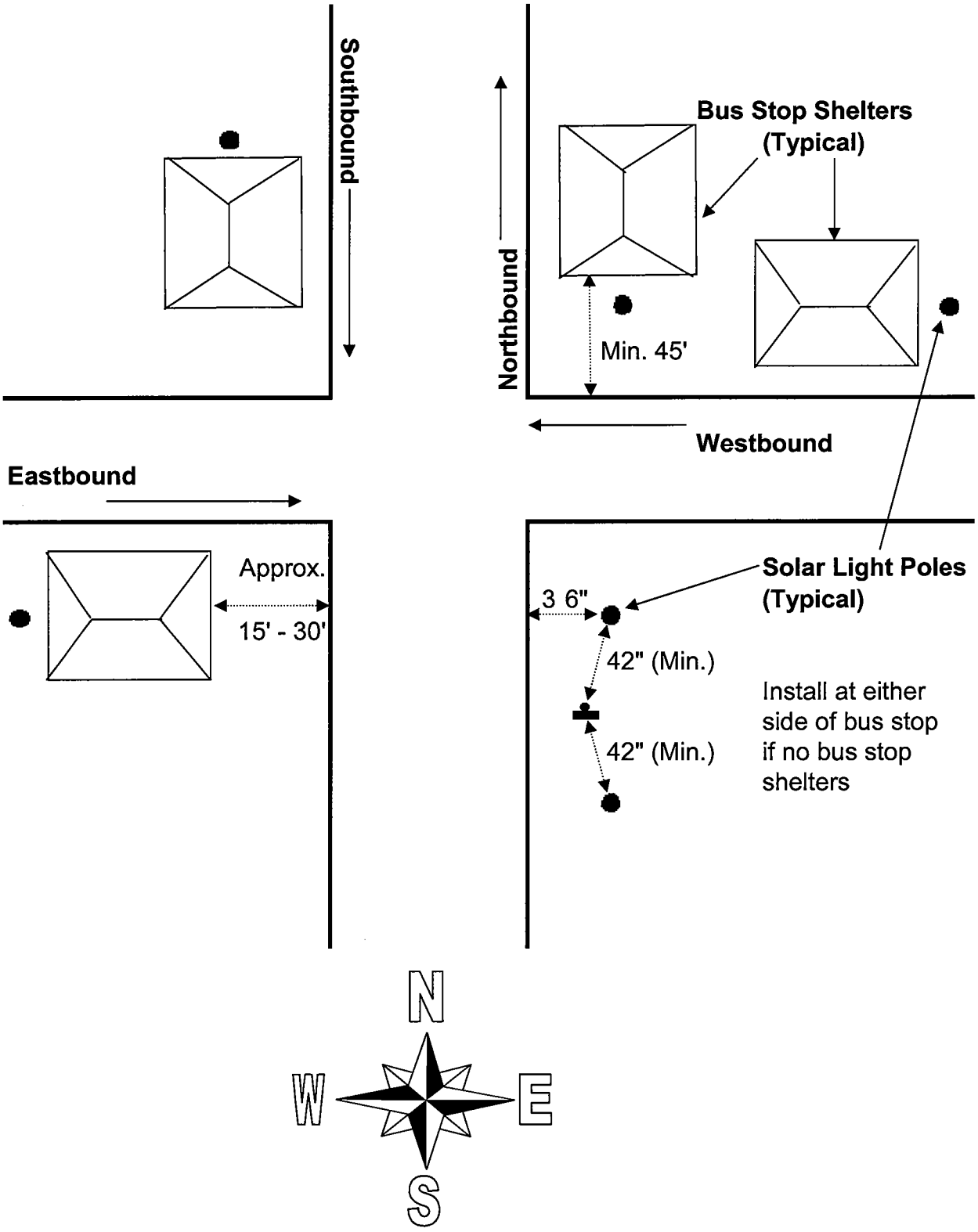

EXHIBIT H

PROPOSED COST FOR BUS STOP AMENITIES

Vendor's Signature:_____, Date _____ Contract Manager:_____, Date _____

Please enter proposed cost for the appropriate as needed service item. All costs are inclusive with times, materials, taxes, and other necessary charges incurred.
Bus Stop Location:_____
Approve ☐ Not approve ☐ Comments: _____

Parts / Services	Reinstall	Repair	Replace	Relocate	Remove	Notes
BUS SHELTER **Style and Model No.**_____						
Bus shelter unit*						
Shelter structure						
Solar panel						
PSA panel glass						
BUS BENCH **Style and Model No.**_____						
Bench unit						
TRASH RECEPTACLE **Style and Model No.**_____						
Receptacle unit						
Dome cover						
Frame						
Liner						
OTHERS: (please specify)						

* Bus shelter unit includes a shelter structure, a bus bench, a trash receptacle and the necessary power source to provide illumination for shelter and/or ad panel.

Sample Fuel Adjustment Calculation: Fuel Purchased at Market Prices

Following sample data is required to calculate fuel adjustment:
Hourly Rate from PW-2, Schedule of Prices: $15.00
Percentage of Hourly Rate Attributable to Fuel Costs: 10% (from Agreement)
Proposal due date: August 2005
Contract start date: July 2006

Fuel Adjustment Component for Diesel Price:
Diesel (On-Highway) - May 2005 $2.4502 per Gallon
Diesel (On-Highway) - April 2006 $2.9323 per Gallon
Percent Change = [(April 2006 Price/Gallon – May 2005 Price/Gallon) x (May 2005 Price/Gallon] x (100)
[($2.9323 - $2.4502) / $2.4502] x (100) = 19.7%
Percent Change in Diesel Price (On-Highway) 19.7% increase

Adjusted Hourly Rate (Fuel Adjustment Component):
= (10% of hourly rate x Percent Change in Diesel Price)
= (10% x $15.00 x 19.7%)
= $0.30 Fuel Adjustment (increase)

Adjusted Hourly Rate for July 2006
$15.00 + $0.30 = $15.30

Sample Fuel Adjustment Calculation: Fuel Purchased Under Long-Term Fuel Supply Agreement

Following sample data is required to calculate fuel adjustment:
Hourly Rate from PW-2, Schedule of Prices: $15.00
Percentage of Hourly Rate Attributable to Fuel Costs: 10% (from Agreement)
Proposal due date: August 2005 (Long-Term Fuel Price: $2.00 per gallon)
Contract start date: July 2006
Renegotiation of Fuel Price: September 2006 (renegotiated price is $2.25 per gallon)

Fuel Adjustment Component for Contract Price:
August 2005 $2.00 cents per gallon
Renegotiated Price in September 2006 $2.25 cents per gallon
[(September 2006 Price/Gallon – August 2005 Price/Gallon) / (August 2005 Price/Gallon)] x (100) = Percent Change
[($2.25 - $2.00) / $2.00] x (100) = 12.5%
Percent change in Diesel (long-term price) 12.5% increase

Adjusted Hourly Rate (Fuel Adjustment Component):
= (10% of hourly rate) x (Percent change in price)
= [(10%) x ($15.00)] x (12.5%)
= $0.19 Fuel Adjustment (increase)

Adjusted Hourly Rate begining September 2006
$15.00 + $0.19 = $15.19

ATTACHMENT B

Bid Detail Information

Bid Number : PW-ASD 697

Bid Title : MAINTENANCE PROGRAM FOR NONADVERTISING BUS STOP AMENITIES - NORTH AND SOUTH COUNTY

Bid Type : Service

Department : Public Works

Commodity : SHELTERS, BUS WAITING

Open Date : 10/18/2007

Closing Date : 11/1/2007 10:00 AM

Bid Amount : N/A

Bid Download : Not Available

Bid Description : PLEASE TAKE NOTICE that Public Works requests proposals for a contract for Maintenance Program for Nonadvertising Bus Stop Amenities – North and South County (2007-PA065). The total annual contract amount of this service is estimated to be $220,000 for North County, and $900,000 for South County. If not enclosed with this letter, the Request for Proposals (RFP) with contract specifications, forms, and instructions for preparing and submitting proposals may be obtained by download from ftp://dpwftp.co.la.ca.us/solicitationdocuments/busstop.pdf or upon request from Mr. Benjamin Sandoval at (626) 458-7334, Monday through Thursday, 7 a.m. to 5:30 p.m.

Each area will be awarded and evaluated independently. Proposers may submit one proposal for one area, or may submit one proposal package for both areas. However, the Work Plan/Staffing Plan must be customized for each area.

Minimum Requirements: Proposers must meet minimum requirements set forth in the RFP document, including, but not limited to, the Proposer or its managing employee must have a minimum of five years' experience in performing the type of services solicited. In addition, copies of the proposer's, employees', or subcontractor's active California Class A or B or C61 (D34) contractor's license; and proposer's active Waste Collector Permit issued by the County Department of Health Services must be submitted.

A Proposers' Conference will be held on Thursday, November 1, 2007, at 10 a.m. at Public Works Headquarters, 900 South Fremont Avenue, Alhambra, California 91803, in Conference Room D. ATTENDANCE BY THE PROPOSER OR AN AUTHORIZED REPRESENTATIVE IS MANDATORY. Public Works will reject proposals from those whose attendance at the conference cannot be verified. Attendees should be prepared to ask questions at that time about the specifications, proposal requirements, and contract terms. After the conference, it may be impossible to respond to further requests for information.

The deadline to submit proposals is Thursday, November 15, 2007, at 5:30 p.m. Please direct your questions to Mr. Sandoval at the number above.

Contact Name : Benjamin Sandoval

Contact Phone# : (626) 458-7334

Contact Email : bsandoval@dpw.lacounty.gov

Last Changed On : 10/23/2007 5:11:29 PM

Back to Last Window